© 2025 Lennox Industries Inc.
Dallas, Texas USA

INSTALLATION INSTRUCTIONS ML180UHE(K)

MERIT® SERIES GAS FURNACE
UPFLOW / HORIZONTAL AIR DISCHARGE

508541-01
11/2025

THIS MANUAL MUST BE LEFT WITH THE HOMEOWNER FOR FUTURE REFERENCE

⚠ This is a safety alert symbol and should never be ignored. When you see this symbol on labels or in manuals, be alert to the potential for personal injury or death.

⚠ CAUTION

As with any mechanical equipment, contact with sharp sheet metal edges can result in personal injury. Take care while handling this equipment and wear gloves and protective clothing.

⚠ IMPORTANT

DO NOT use the heat exchanger bracket to lift, drag or pull the furnace to its installation location. Doing so will loosen the bracket causing noise and or unsafe operation.

⚠ WARNING

This furnace is equipped with an ignition control factory enabled for use with Lennox A2L refrigerant systems. Disabling the refrigerant detection functionality on A2L system is prohibited by safety codes. Refer to furnace installation instructions for non-A2L and non-Lennox refrigerant system setup.

Contents

Unit Dimensions - inches (mm) 2
ML180UHE(K) Gas Furnace 3
Shipping and Packing List 3
Safety 3
Use of Furnace as a Construction Heater 4
General 4
Combustion, Dilution, Ventilation Air 5
Setting Equipment 8
Filters 11
Duct System 12
Venting 13
Gas Piping 20
Electrical 23
Integrated Control 25
Twinning 32
Low GWP Application 33
Unit Start-Up 36
Gas Pressure Measurement 37
Proper Combustion 37
High Altitude 37
Other Unit Adjustements 38
Service 39
Repair Parts List 41
Start Up Check List 42
Blower CFM Tables 44

1125
508541-01

Unit Dimensions - inches (mm)

[1]NOTE - 60C and 60D units that require air volumes over 1800 cfm must have one of the following:
1. **Single side return air and Optional Return Air Base with transition that must accommodate required 20 x 25 x 1 in. (508 x 635 x 25 mm) air filter to maintain proper air velocity.)**
2. **Bottom return air.**
3. **Return air from both sides.**
4. **Bottom and one side return air.**

See Blower Performance Tables for additional information.

[2]Flue outlet may be horizontal but furnace must be vented vertically

[3]Optional external side return air filter kit cannot be used with the optional RAB Return Air Base.

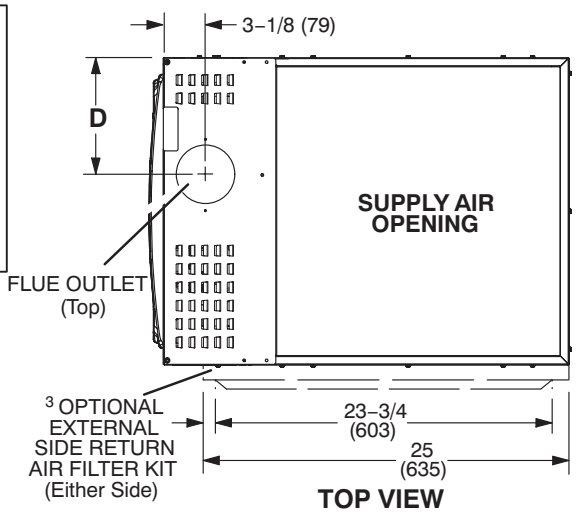

TOP VIEW

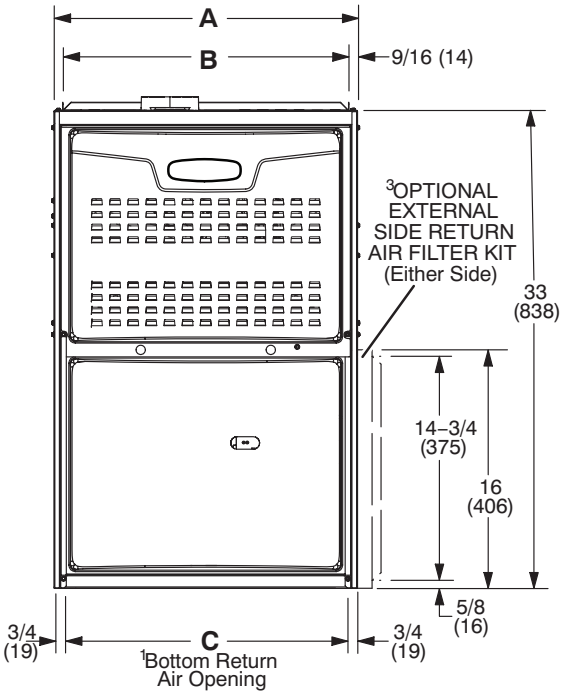

FRONT VIEW

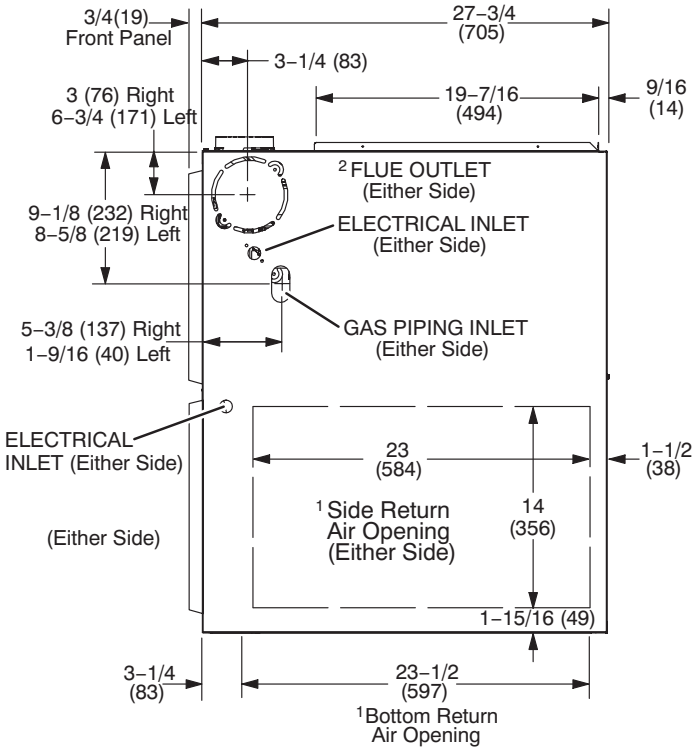

SIDE VIEW

ML180UHE(K) Model	A		B		C		D	
	in	mm	in	mm	in	mm	in	mm
045(X)E36AK 070(X)E36AK	14-1/2	368	13-3/8	340	13	330	4-3/4	121
070(X)E36BK 090(X)E48BK	17-1/2	446	16-3/8	416	16	406	6-1/4	159
090E60CK 110(X)E60CK	21	533	19-7/8	504	19-1/2	495	8	203
135E60DK	24-1/2	622	23-3/8	546	23	584	9-3/4	248

ML180UHE(K) Gas Furnace

The ML180UHE(K) unit is shipped ready for installation in the upflow or horizontal right position (for horizontal left position the combustion air pressure switch must be moved) fueled by natural gas. A conversion kit (ordered separately) is required for use in LP/Propane gas applications. The furnace is shipped with the bottom panel in place. The bottom panel must be removed if the unit is to be installed in a horizontal application. The panel may also be removed in upflow applications.

Shipping and Packing List

Package 1 of 1 contains

1 - Assembled ML180UHE(K) unit

1 - Bag assembly containing the following:

- 2 - Screws
- 1 - Snap bushing
- 1 - Snap plug
- 1 - Wire tie
- 1 -Vent warning label
- 1 - Owner's manual and warranty card

The following items may be ordered separately:

1 - Thermostat

1 - Suspension kit (for horizontal installations)

1 - LP/Propane changeover kit

1 - Return air base

1 - High altitude kit

1 - Side filter kit

1 - Sensor Kit (field installed)

Check equipment for shipping damage. If you find any damage, immediately contact the last carrier.

Safety Information

⚠ DANGER

Danger of explosion.

There are circumstances in which odorant used with LP/propane gas can lose its scent. In case of a leak, LP/propane gas will settle close to the floor and may be difficult to smell. An LP/propane leak detector should be installed in all LP applications.

⚠ WARNING

Improper installation, adjustment, alteration, service or maintenance can cause property damage, personal injury or loss of life. Installation and service must be performed by a licensed professional HVAC installer or equivalent, service agency, or the gas supplier.

Certifications

ML180UHE(K) units are CSA International certified to ANSI Z21.47.

In the USA, installation of gas furnaces must conform with local building codes. In the absence of local codes, units must be installed according to the current National Fuel Gas Code (ANSI-Z223.1). The National Fuel Gas Code is available from the following address:

American National Standards Institute, Inc.
11 West 42nd Street
New York, NY 10036

Clearances

Adequate clearance must be made around the air openings into the vestibule area. In order to ensure proper unit operation, combustion and ventilation air supply must be provided according to the current National Fuel Gas Code.

Vent installations must be consistent with the National Fuel Gas Code venting tables (in this instruction) and applicable provisions of local building codes.

This furnace is CSA International certified for installation clearances to combustible material as listed on the unit nameplate and in the tables in figures 7 and 11. Accessibility and service clearances must take precedence over fire protection clearances.

NOTE - *For installation on combustible floors, the furnace shall not be installed directly on carpeting, tile, or other combustible material other than wood flooring.*

Installed Locations

For installation in a residential garage, the furnace must be installed so that the burner(s) and the ignition source are located no less than 18 inches (457 mm) above the floor. The furnace must be located or protected to avoid physical damage by vehicles. When a furnace is installed in a public garage, hangar, or other building that has a hazardous atmosphere, the furnace must be installed according to recommended good practice requirements and current National Fuel Gas Code.

Temperature Rise

NOTE - *Furnace must be adjusted to obtain a temperature rise within the range specified on the unit nameplate. Failure to do so may cause erratic limit operation and may result in premature heat exchanger failure.*

This ML180UHE(K) furnace must be installed so that its electrical components are protected from water.

Installed in Combination with a Cooling Coil

When this furnace is used with cooling units, it shall be installed in parallel with, or on the upstream side of, cooling units to avoid condensation in the heating compartment. See FIGURE 1.

With a parallel flow arrangement, a damper (or other means to control the flow of air) must adequately prevent chilled air from entering the furnace. If the damper is manually operated, it must be equipped to prevent operation of either the heating or the cooling unit, unless it is in the full HEAT or COOL setting.

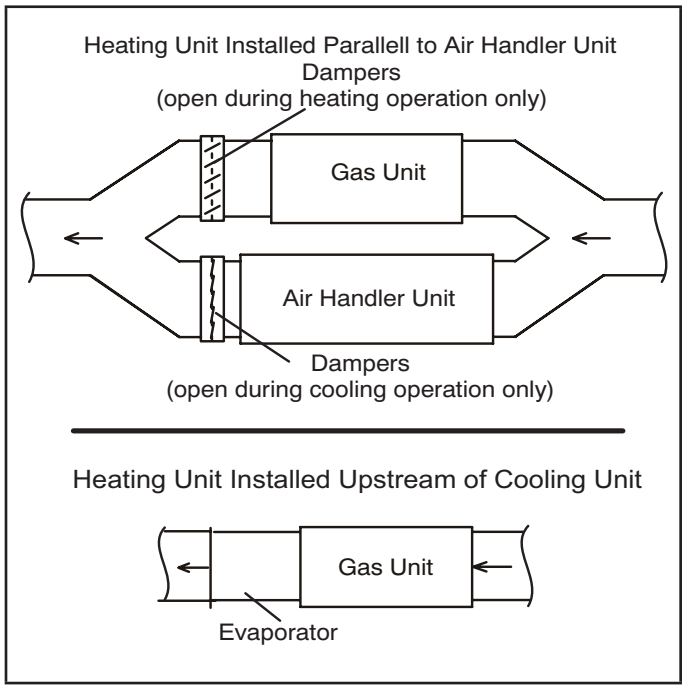

FIGURE 1

When installed, this furnace must be electrically grounded according to local codes. In addition, in the United States, installation must conform with the current National Electric Code, ANSI/NFPA No. 70. The National Electric Code (ANSI/NFPA No. 70) is available from the following address:

National Fire Protection Association

1 Battery March Park

Quincy, MA 02269

NOTE - *This furnace is designed for a minimum continuous return air temperature of 60°F (16°C) or an intermittent operation down to 55°F (13°C) dry bulb for cases where a night setback thermostat is used. Return air temperature must not exceed 85°F (29°C) dry bulb.*

The ML180UHE(K) furnace may be installed in alcoves, closets, attics, basements, garages, crawl spaces and utility rooms in the upflow or horizontal position.

This furnace design has not been CSA International certified for installation in mobile homes, recreational vehicles, or outdoors.

Use of Furnace as Construction Heater

Lennox does not recommend the use of ML180UHE(K) units as a construction heater during any phase of construction. Very low return air temperatures, harmful vapors and operation of the unit with clogged or misplaced filters will damage the unit.

ML180UHE(K) units may be used for heating of buildings or structures under construction, if the following conditions are met:

- The vent system must be permanently installed per these installation instructions.
- A room thermostat must control the furnace. The use of fixed jumpers that will provide continuous heating is not allowed.
- The return air duct must be provided and sealed to the furnace.
- Return air temperature range between 60°F (16°C) and 80°F (27°C) must be maintained.
- Air filters must be installed in the system and must be maintained during construction.
- Air filters must be replaced upon construction completion.
- The input rate and temperature rise must be set per the furnace rating plate.
- One hundred percent (100%) outdoor air must be provided for combustion air requirements during construction. Temporary ducting may supply outdoor air to the furnace. Do not connect duct directly to the furnace. Size the temporary duct following these instructions in section for Combustion, Dilution and Ventilation Air in a confined space with air from outside.
- The furnace heat exchanger, components, duct system, air filters and evaporator coils must be thoroughly cleaned following final construction clean-up.
- The refrigerant leak detection sensor must be inspected for dust/debris deposits. Please refer to the evaporator coil and/or refrigerant detection sensor kit instructions for additional information.
- All furnace operating conditions (including ignition, input rate, temperature rise and venting) must be verified according to these installation instructions.

General

These instructions are intended as a general guide and do not supersede local codes in any way. Consult authorities having jurisdiction before installation. In addition to the requirements outlined previously, the following general recommendations must be considered when installing a ML180UHE(K) furnace:

- Place the furnace as close to the center of the air distribution system as possible. The furnace should also be located close to the chimney or vent termination point.

- Do not install the furnace where drafts might blow directly into it. This could cause improper combustion and unsafe operation.
- Do not block the furnace combustion air openings with clothing, boxes, doors, etc. Air is needed for proper combustion and safe unit operation.
- When the furnace is installed in an attic or other insulated space, keep insulation away from the furnace.

NOTE - The Commonwealth of Massachusetts stipulates these additional requirements:

- ***Gas furnaces shall be installed by a licensed plumber or fitter only.***
- ***The gas cock must be "T handle" type.***
- ***When a furnace is installed in an attic, the passageway to and service area surrounding the equipment shall be floored.***

Combustion, Dilution & Ventilation Air

In the past, there was no problem in bringing in sufficient outdoor air for combustion. Infiltration provided all the air that was needed. In today's homes, tight construction practices make it necessary to bring in air from outside for combustion. Take into account that exhaust fans, appliance vents, chimneys, and fireplaces force additional air that could be used for combustion out of the house. Unless outside air is brought into the house for combustion, negative pressure (outside pressure is greater than inside pressure) will build to the point that a downdraft can occur in the furnace vent pipe or chimney. As a result, combustion gases enter the living space creating a potentially dangerous situation.

In the absence of local codes concerning air for combustion and ventilation, use the guidelines and procedures in this section to install ML180UHE(K) furnaces to ensure efficient and safe operation. You must consider combustion air needs and requirements for exhaust vents. A portion of this information has been reprinted with permission from the National Fuel Gas Code (ANSI-Z223.1). This reprinted material is not the complete and official position of the ANSI on the referenced subject, which is represented only by the standard in its entirety.

⚠ CAUTION

Do not install the furnace in a corrosive or contaminated atmosphere. Meet all combustion and ventilation air requirements, as well as all local codes.

⚠ CAUTION

Insufficient combustion air can cause headaches, nausea, dizziness or asphyxiation. It will also cause excess water in the heat exchanger resulting in rusting and premature heat exchanger failure. Excessive exposure to contaminated combustion air will result in safety and performance related problems. Avoid exposure to the following substances in the combustion air supply:

Permanent wave solutions
Chlorinated waxes and cleaners
Chlorine base swimming pool chemicals
Water softening chemicals
De-icing salts or chemicals
Carbon tetrachloride
Halogen type refrigerants
Cleaning solvents (such as perchloroethylene)
Printing inks, paint removers, varnishes, etc.
Hydrochloric acid
Cements and glues
Antistatic fabric softeners for clothes dryers
Masonry acid washing materials

All gas-fired appliances require air for the combustion process. If sufficient combustion air is not available, the furnace or other appliances will operate inefficiently and unsafely. Enough air must be provided to meet the needs of all fuel-burning appliances and appliances such as exhaust fans which force air out of the house. When fireplaces, exhaust fans, or clothes dryers are used at the same time as the furnace, much more air is necessary to ensure proper combustion and to prevent a downdraft. Insufficient air causes incomplete combustion which can result in carbon monoxide.

In addition to providing combustion air, fresh outdoor air dilutes contaminants in the indoor air. These contaminants may include bleaches, adhesives, detergents, solvents and other contaminants which can corrode furnace components.

The requirements for providing air for combustion and ventilation depend largely on whether the furnace is installed in an unconfined or a confined space.

Unconfined Space

An unconfined space is an area such as a basement or large equipment room with a volume greater than 50 cubic feet (1.42 m3) per 1,000 Btu (.29 kW) per hour of the combined input rating of all appliances installed in that space.

This space also includes adjacent rooms which are not separated by a door. Though an area may appear to be unconfined, it might be necessary to bring in outdoor air for combustion if the structure does not provide enough air by infiltration. If the furnace is located in a building of tight construction with weather stripping and caulking around the windows and doors, follow the procedures in the air from out.

Confined Space

A confined space is an area with a volume less than 50 cubic feet (1.42 m3) per 1,000 Btu (.29 kW) per hour of the combined input rating of all appliances installed in that space. This definition includes furnace closets or small equipment rooms.

When the furnace is installed so that supply ducts carry air circulated by the furnace to areas outside the space containing the furnace, the return air must be handled by ducts which are sealed to the furnace casing and which terminate outside the space containing the furnace. This is especially important when the furnace is mounted on a platform in a confined space such as a closet or small equipment room.

Even a small leak around the base of the unit at the platform or at the return air duct connection can cause a potentially dangerous negative pressure condition. Air for combustion and ventilation can be brought into the confined space either from inside the building or from outside.

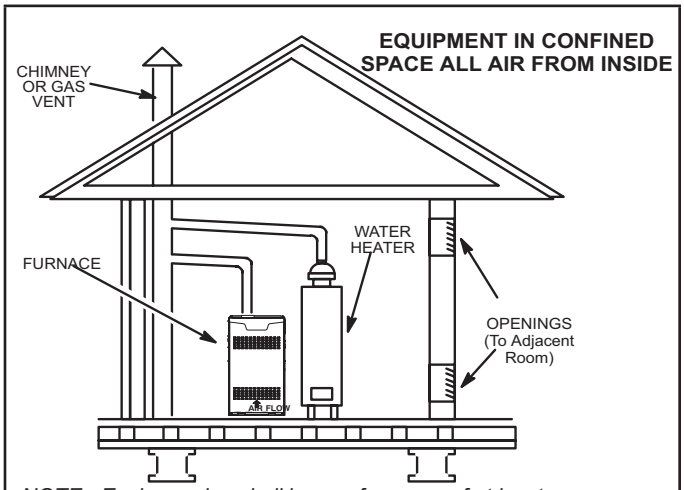

NOTE - Each opening shall have a free area of at least one square inch (645 mm^2) per 1,000 Btu (.29 kW) per hour of the total input rating of all equipment in the enclosure, but not less than 100 square inches (64516 mm^2).

FIGURE 2

Air from Inside

If the confined space that houses the furnace adjoins a space categorized as unconfined, air can be brought in by providing two permanent openings between the two spaces. Each opening must have a minimum free area of 1 square inch (645 mm2) per 1,000 Btu (.29 kW) per hour of total input rating of all gas-fired equipment in the confined space. Each opening must be at least 100 square inches (64516 mm2). One opening shall be within 12 inches (305 mm) of the top of the enclosure and one opening within 12 inches (305 mm) of the bottom. See FIGURE 2.

Air from Outside

If air from outside is brought in for combustion and ventilation, the confined space must have two permanent openings. One opening shall be within 12 inches (305 mm) of the top of the enclosure and one opening within 12 inches (305 mm) of the bottom. These openings must communicate directly or by ducts with the outdoors or spaces (crawl or attic) that freely communicate with the outdoors or indirectly through vertical ducts. Each opening shall have a minimum free area of 1 square inch (645 mm2) per 4,000 Btu (1.17 kW) per hour of total input rating of all equipment in the enclosure. See FIGURE 3 and FIGURE 4. When communicating with the outdoors through horizontal ducts, each opening shall have a minimum free area of 1 square inch (645 mm2) per 2,000 Btu (.56 kW) per total input rating of all equipment in the enclosure. See FIGURE 5.

When ducts are used, they shall be of the same cross-sectional area as the free area of the openings to which they connect. The minimum dimension of rectangular air ducts shall be no less than 3 inches (75 mm). In calculating free area, the blocking effect of louvers, grilles, or screens must be considered. If the design and free area of protective covering is not known for calculating the size opening required, it may be assumed that wood louvers will have 20 to 25 percent free area and metal louvers and grilles will have 60 to 75 percent free area. Louvers and grilles must be fixed in the open position or interlocked with the equipment so that they are opened automatically during equipment operation.

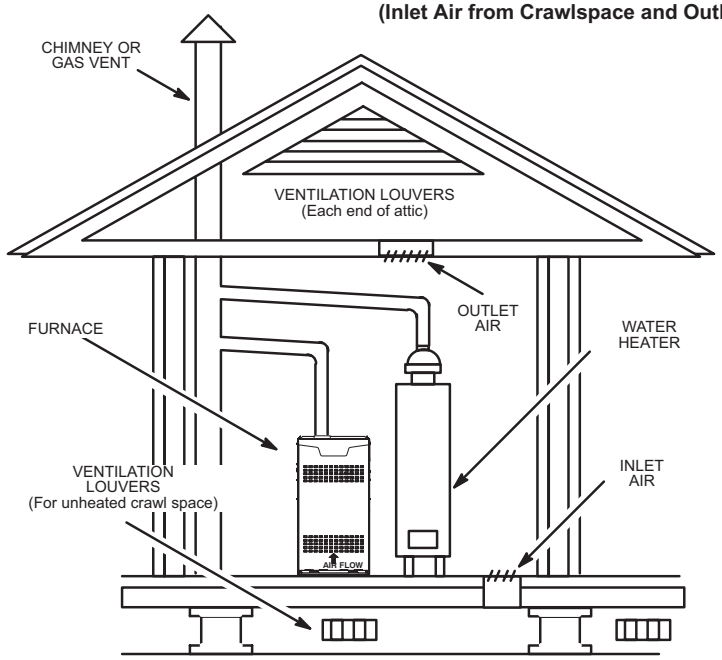

NOTE-The inlet and outlet air openings shall each have a free area of at least one square inch (645 mm^2) *per 4,000 Btu (1.17 kW) per hour of the total input rating of all equipment in the enclosure.*

FIGURE 3

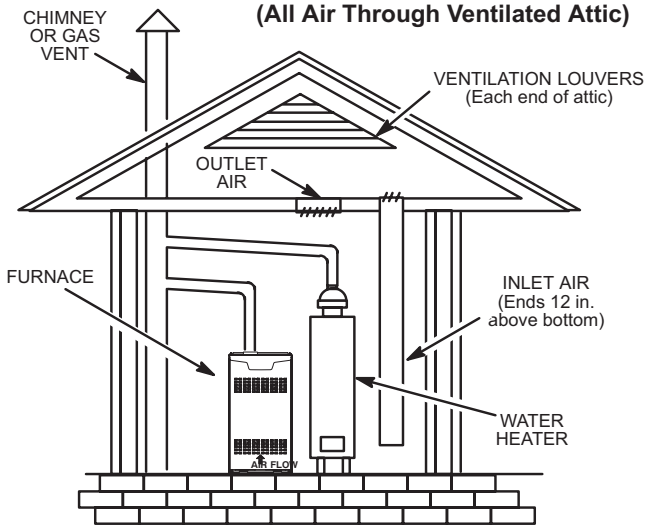

NOTE-The inlet and outlet air openings shall each have a free area of at least one square inch (645 mm^2) per 4,000 Btu (1.17 kW) per hour of the total input rating of all equipment in the enclosure.

FIGURE 4

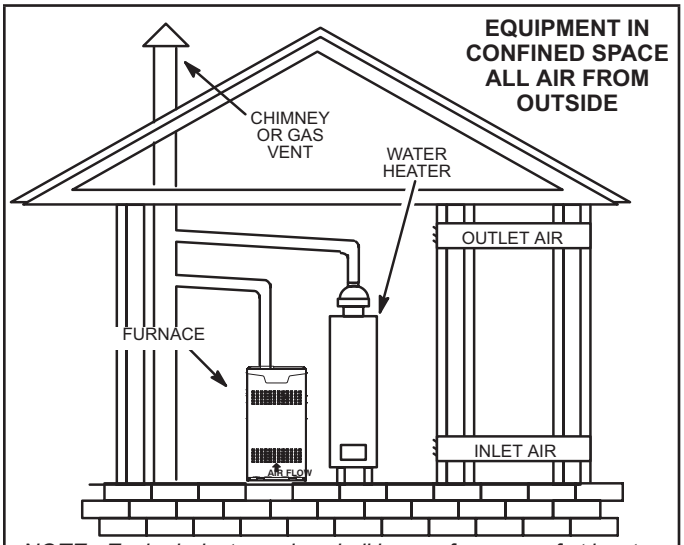

NOTE - Each air duct opening shall have a free area of at least one square inch (645 mm^2) per 2,000 Btu (.59 kW) per hour of the total input rating of all equipment in the enclosure. If the equipment room is located against an outside wall and the air openings communicate directly with the outdoors, each opening shall have a free area of at least one square inch (645 mm^2) per 4,000 Btu (1.17 kW) per hour of the total input rating of all other equipment in the enclosure.

FIGURE 5

Setting Equipment

⚠ WARNING

Do not install the furnace on its front or its back. Do not connect the return air ducts to the back of the furnace. Doing so will adversely affect the operation of the safety control devices, which could result in personal injury or death.

The ML180UHE(K) gas furnace can be installed as shipped in either the upflow position or the horizontal position. Select a location that allows for the required clearances that are listed on the unit nameplate. Also consider gas supply connections, electrical supply, vent connection, and installation and service clearances [24 inches (610 mm) at unit front]. The unit must be level.

NOTE - *Units with 1/2 or 3/4 hp blower motors are equipped with three flexible legs and one rigid leg. See FIGURE 6. The rigid leg is equipped with a shipping bolt and a flat white plastic washer (rather than the rubber mounting grommet used with a flexible mounting leg).* ***The bolt and washer must be removed before the furnace is placed into operation.*** *After the bolt and washer have been removed, the rigid leg will not touch the blower housing.*

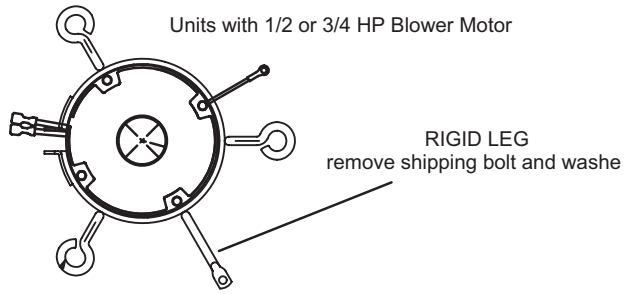

FIGURE 6

Upflow Applications

Allow for clearances to combustible materials as indicated on the unit nameplate. Minimum clearances for closet or alcove installations are shown in FIGURE 7.

Upflow Application Installation Clearances

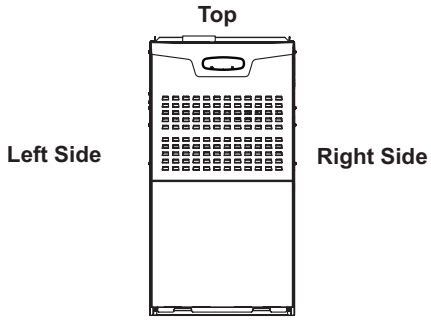

Type of Vent Connector	Type C	Type B1
Top	1 in. (25 mm)	1 in. (25 mm)
*Front	2-1/4 in. (57 mm)**	2-1/4 in. (57 mm)
Back	0	0
Sides	0†	0
Vent	6 in. (152 mm)	1 in. (25 mm)
Floor	0‡	0‡

*Front clearance in alcove installation must be 24 in. (610 mm). Maintain a minimum of 24 in. (610 mm) for front service access.
** 4-1/2 in. if single wall vent pipe is used.
‡For installation on a combustible floor, do not install the furnace directly on carpeting, tile or other combustible materials other than wood flooring.
†Left side requires 3 inches if a single wall vent is used on 14-1/2 in. cabinets, or 2inches if a single wall vent pipe is used on 17-1/2 in. cabinets.

FIGURE 7

Return Air -- Upflow Applications

Return air can be brought in through the bottom or either side of the furnace installed in an upflow application. If the furnace is installed on a platform with bottom return, make an airtight seal between the bottom of the furnace and the platform to ensure that the furnace operates properly and safely. The furnace is equipped with a removable bottom panel to facilitate installation.

Markings are provided on both sides of the furnace cabinet for installations that require side return air. Cut the furnace cabinet at the maximum dimensions shown on page 2.

NOTE - 60C and 60D units that require air volumes over 1800 cfm (850 L/s) must have one of the following:

1 - Single side return air with optional return air base with transition that must accommodate required 20 x 25 x 1 in. (508 x 635 x 25 mm) air filter to maintain proper air velocity.) See FIGURE 8.

2 - Bottom return air.

3 - Return air from both sides.

4 - Bottom and one side return air.

Refer to Product Specifications for additional information

Single Side Return Air
(with transition and filter)

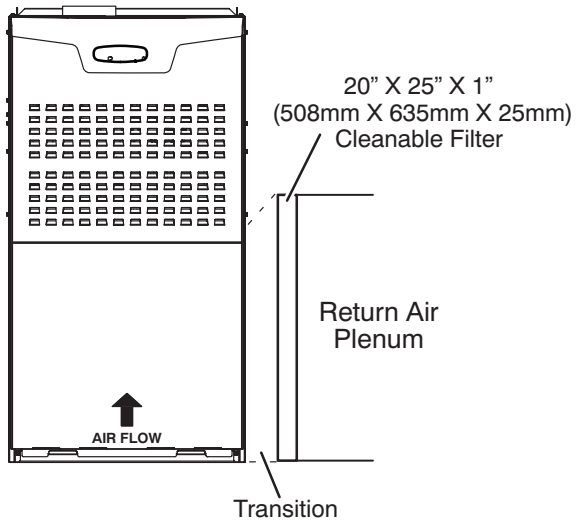

FIGURE 8

Optional Return Air Base
(Upflow Applications Only -- For use with A, B, C and D cabinets)

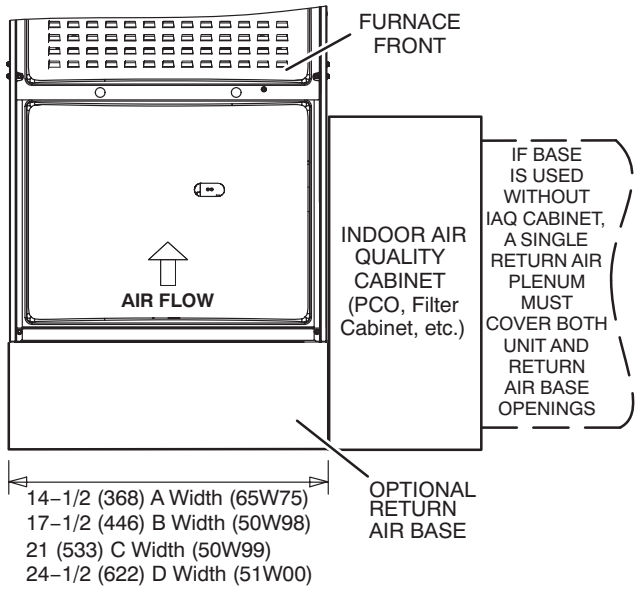

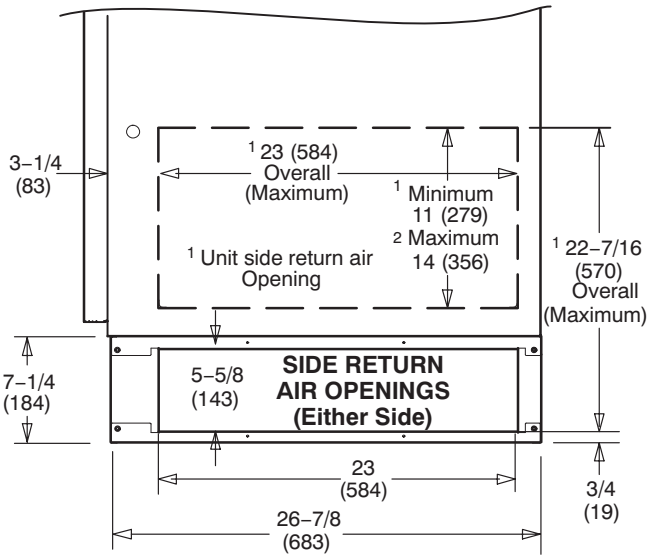

SIDE VIEW

NOTE- Optional Side Return Air Filter Kits are not for use with Optional Return Air Base.

[1] Both the unit return air opening and the base return air opening must be covered by a single plenum or IAQ cabinet. Minimum unit side return air opening dimensions for units requiring 1800 cfm or more of air (W x H): 23 x 11 in. (584 x 279 mm). The opening can be cut as needed to accommodate plenum or IAQ cabinet while maintaining dimensions shown. Side return air openings must be cut in the field. There are cutting guides stenciled on the cabinet for the side return air opening. The size of the opening must not extend beyond the markings on the furnace cabinet.

[2] To minimize pressure drop, the largest opening height possible (up to 14 inches 356 mm) is preferred.

FIGURE 9

Removing the Bottom Panel

Remove the two screws that secure the bottom cap to the furnace. Pivot the bottom cap down to release the bottom panel. Once the bottom panel has been removed, reinstall the bottom cap. See FIGURE 10.

Removing the Bottom Panel

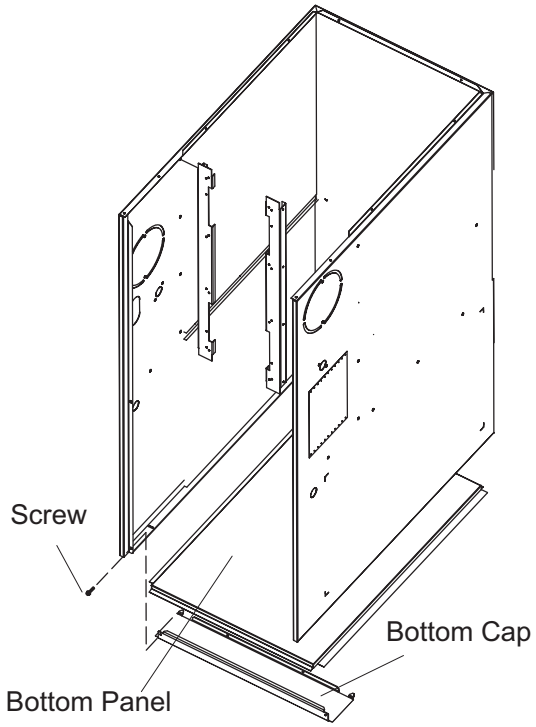

FIGURE 10

Horizontal Application Installation Clearances

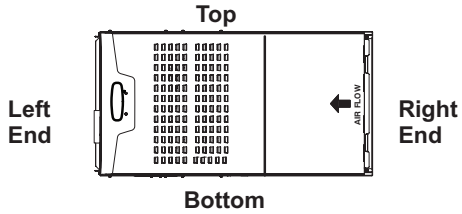

Vent Connector Type	Type C	Type B1
Top	0	0
*Front	2-1/4 in. (57 mm)**	2-1/4 in. (57 mm)
Back	0	0
Ends	2 in. (51 mm)	2 in. (51 mm)
Vent	6 in. (152 mm)	1 in. (25 mm)
Floor	0‡	0‡

*Front clearance in alcove installation must be 24 in. (610 mm). Maintain a minimum of 24 in. (610 mm) for front service access.
** 4-1/2 in. if singlewall vent pipe is used.
‡For installations on a combustible floor, do not install the furnace directly on carpeting, tile or other combustible materials other than wood flooring.

FIGURE 11

Horizontal Applications

The ML180UHE(K) furnace can be installed in horizontal applications. Order horizontal suspension kit (51W10) from Lennox, or use equivalent suspension method.

Allow for clearances to combustible materials as indicated on the unit nameplate. Minimum clearances for closet or alcove installations are shown in FIGURE 11.

This furnace may be installed in either an attic or a crawlspace. Either suspend the furnace from roof rafters or floor joists, as shown in FIGURE 12, or install the furnace on a platform, as shown in FIGURE 13.

Typical Horizontal Application Unit Suspended in Attic or Crawlspace

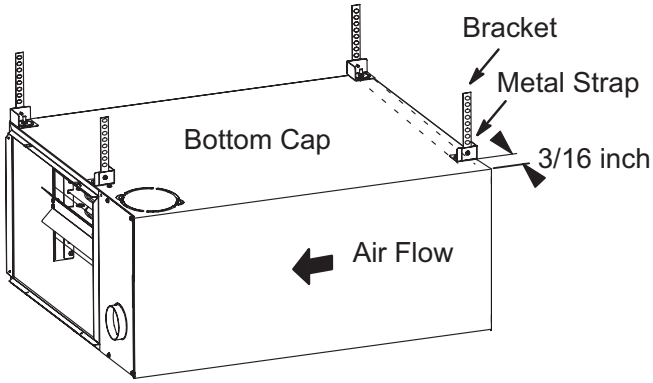

FIGURE 12

NOTE - *Heavy-gauge perforated sheet metal straps may be used to suspend the unit from roof rafters or ceiling joists. When straps are used to suspend the unit in this way, support must be provided for both the ends. The straps must not interfere with the plenum or exhaust piping installation.* ***Cooling coils and supply and return air plenums must be supported separately.***

NOTE - *When the furnace is installed on a platform in a crawlspace, it must be elevated enough to avoid water damage and to allow the evaporator coil to drain.*

Return Air -- Horizontal Applications

Return air must be brought in through the end of a furnace installed in a horizontal application. The furnace is equipped with a removable bottom panel to facilitate installation. See FIGURE 10.

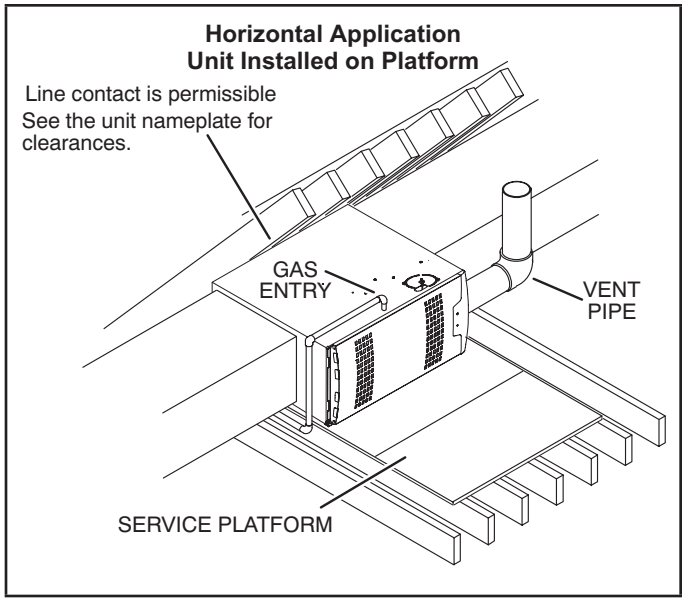

FIGURE 13

⚠ CAUTION

If this unit is being installed in a space serviced by an exhaust fan, power exhaust fan, or other device which may create a negative pressure in the space, take care when sizing the inlet air opening. The inlet air opening must be sized to accommodate the maximum volume of exhausted air as well as the maximum volume of combustion air required for all gas appliances serviced by this space.

⚠ WARNING

Improper installation of the furnace can result in personal injury or death. Combustion and flue products must never be allowed to enter the return air system or the living space. Use screws and joint tape to seal the return air system to the furnace. In platform installations with bottom return air, the furnace should be sealed airtight to the return air plenum. A door must never be used as a portion of the return air duct system. The base must provide a stable support and an airtight seal to the furnace. Allow absolutely no sagging, cracks, gaps, etc. The return and supply air duct systems must never be connected to or from other heating devices such as a fireplace or stove, etc. Fire, explosion, carbon monoxide poisoning, personal injury and/or property damage could result.

⚠ WARNING

The blower access panel must be securely in place when the blower and burners are operating. Gas fumes, which could contain carbon monoxide, can be drawn into living space resulting in personal injury or death.

Filters

This unit is not equipped with a filter or rack. A field-provided high-velocity filter is required for the unit to operate properly. TABLE 1 lists recommended filter sizes. A filter must be in place any time the unit is operating.

TABLE 1

Furnace Cabinet Width	Filter Size	
	Side Return	Bottom Return
A - 14-1/2”	16 X 25 X 1 (1)	14 X 25 X 1 (1)
B - 17-1/2”	16 X 25 X 1 (1)	16 X 25 X 1 (1)
C - 21”	16 X 25 X 1 (1)	20 x 25 x 1 (1)
D - 24-1/2”	16 X 25 X 1 (2)	24 x 25 x 1 (1)

⚠ IMPORTANT

If a high efficiency filter is being installed as part of this system to ensure better indoor air quality, the filter must be properly sized. High efficiency filters have a higher static pressure drop than standard efficiency glass/foam filters. If the pressure drop is too great, system capacity and performance may be reduced. The pressure drop may also cause the limit to trip more frequently during the winter and the indoor coil to freeze in the summer, resulting in an increase in the number of service calls.

Before using any filter with this system, check the specifications provided by the filter manufacturer against the data given in the appropriate Lennox Product Specifications bulletin. Additional information is provided in Service and Application Note ACC002 (August 2000).

Duct System

Use industry-approved standards (such as those published by Air Conditioning Contractors of America or American Society of Heating, Refrigerating and Air Conditioning Engineers) to size and install the supply and return air duct system. See FIGURE 14 for proper duct system installation. This will result in a quiet and low-static system that has uniform air distribution.

NOTE - *Do not operate the furnace in the heating mode with an external static pressure that exceeds 0.5 inches w.c. Higher external static pressures may cause erratic limit operation.*

Supply Air Plenum

If the furnace is installed without a cooling coil, a removable access panel must be installed in the supply air duct. The access panel should be large enough to permit inspection (either by smoke or reflected light) of the heat exchanger for leaks after the furnace is installed. The furnace access panel must always be in place when the furnace is operating and it must not allow leaks into the supply air duct system. For horizontal units, install self tapping screws in the three evaporator coil screw holes made for horizontal applications to seal the top cap to the vestibule panel.

Return Air Plenum

NOTE - *Return air must not be drawn from a room where this furnace, or any other gas-fueled appliance (i.e., water heater), or carbon monoxide producing device (i.e., wood fireplace) is installed.*

When return air is drawn from a room, a negative pressure is created in the room. If a gas appliance is operating in a room with negative pressure, the flue products can be pulled back down the vent pipe and into the room. This reverse flow of the flue gas may result in incomplete combustion and the formation of carbon monoxide gas. This toxic gas might then be distributed throughout the house by the furnace duct system.

In upflow applications, the return air can be brought in through the bottom or either side of the furnace. If a furnace with bottom return air is installed on a platform, make an airtight seal between the bottom of the furnace and the platform to ensure that the unit operates properly and safely. Use fiberglass sealing strips, caulking, or equivalent sealing method between the plenum and the furnace cabinet to ensure a tight seal. If a filter is installed, size the return air duct to fit the filter frame.

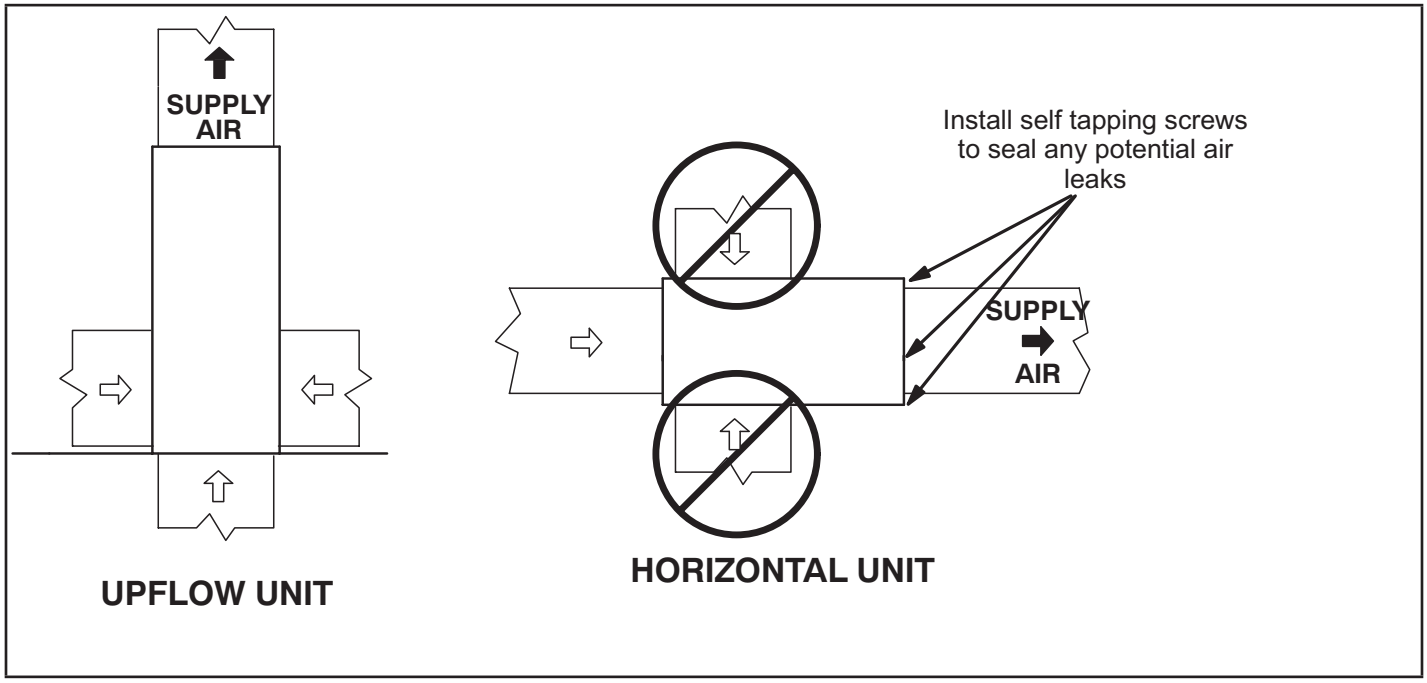

FIGURE 14

Venting

A 4-inch diameter flue transition is factory-installed on the combustion air inducer outlet of all models. FIGURE 16 shows the combustion air inducer as shipped from the factory.

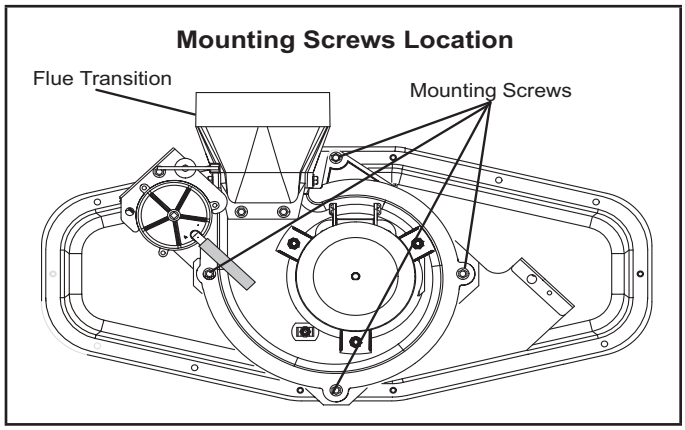

FIGURE 15

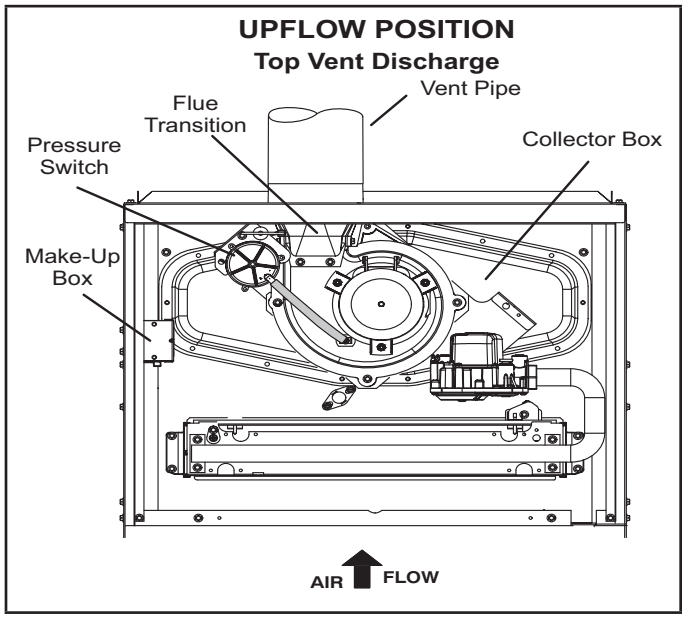

FIGURE 16

⚠ IMPORTANT

The unit will not vent properly with the flue transition pointed down in the 6 o'clock position. The combustion air inducer may be rotated clockwise or counterclockwise by 90° to allow for top or side vent discharge in all applications. When the unit is installed, the flue transition must be in the 9 o'clock, 12 o'clock or 3 o'clock position.

If necessary, reposition the combustion air inducer, pressure switch and/or make-up box as needed per the following steps. See FIGURE 17 through FIGURE 21.

1 - Remove the four mounting screws (FIGURE 15) which secure the combustion air inducer / pressure switch assembly to the orifice plate. Lift the assembly and rotate it 90 degrees clockwise or counterclockwise to either the 3 o'clock position or to 9 o'clock position. Resecure with four screws. Gasket should be left in place.

2 - Use tin snips to cut preferred opening on the cabinet for repositioning the flue outlet. Use the cut-out piece as a cover plate to patch unused opening on cabinet

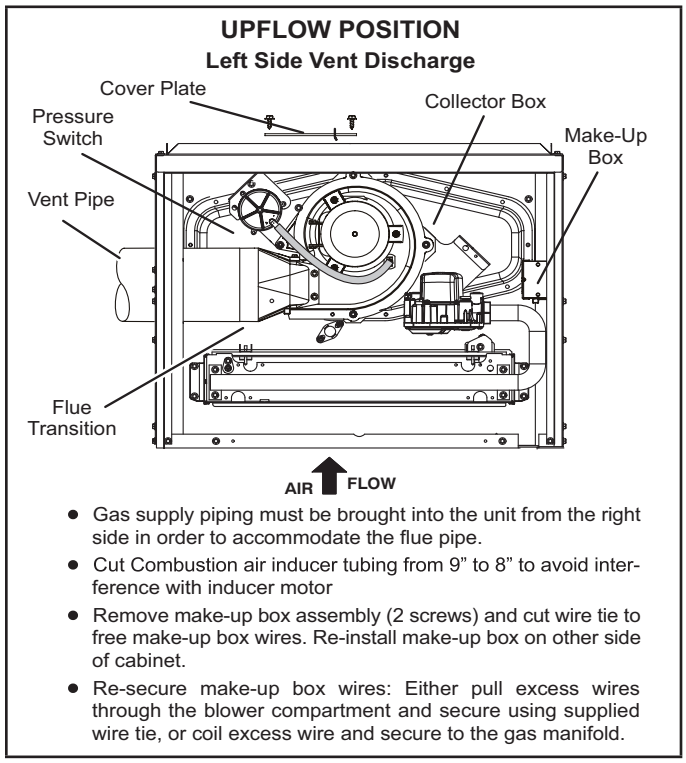

FIGURE 17

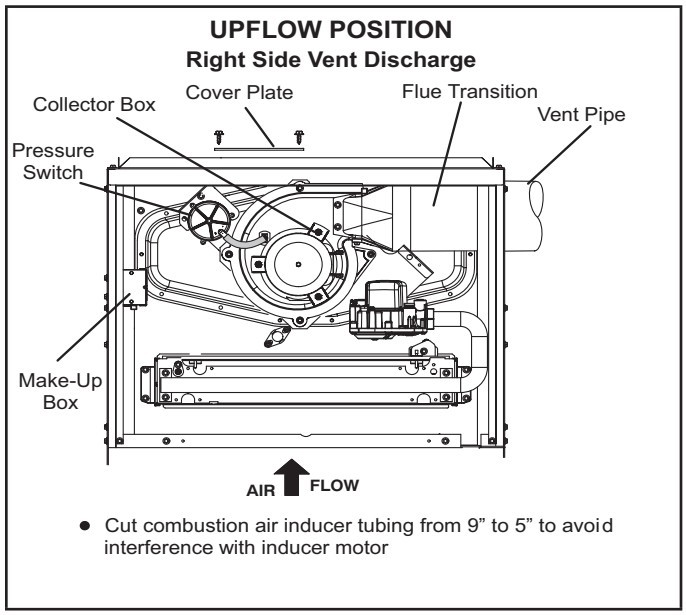

FIGURE 18

HORIZONTAL LEFT POSITION
Top Vent Discharge

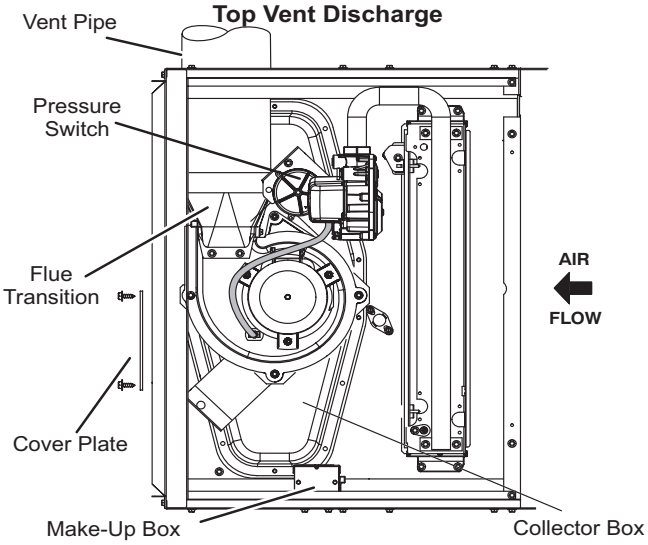

- Disconnect pressure switch hose from barbed fitting on the pressure switch assembly. Remove pressure switch assembly (1 screw) and cut wire tie to free pressure switch wires. Re-install pressure switch on the other side of orifice plate and re-connect pressure switch hose.
- Re-secure pressure switch wires: Either pull excess wires through the blower compartment and secure using supplied wire tie, or coil excess wire and secure to the gas manifold.

FIGURE 19

HORIZONTAL LEFT POSITION
Side Vent Discharge

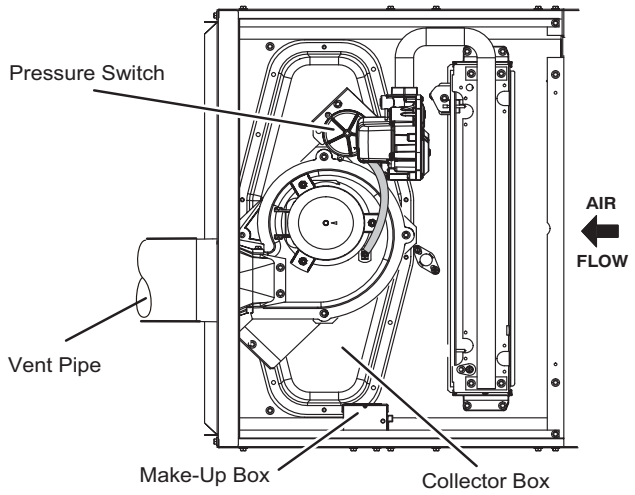

- Cut combustion air inducer tubing from 9” to 7” to avoid interference with inducer motor
- Disconnect pressure switch hose from barbed fitting on the pressure switch assembly. Remove pressure switch assembly (1 screw) and cut wire tie to free pressure switch wires. Re-install pressure switch on the other side of orifice plate and re-connect pressure switch hose.
- Re-secure pressure switch wires: Either pull excess wires through the blower compartment and secure using supplied wire tie, or coil excess wire and secure to the gas manifold.

FIGURE 20

HORIZONTAL RIGHT POSITION
Top Vent Discharge

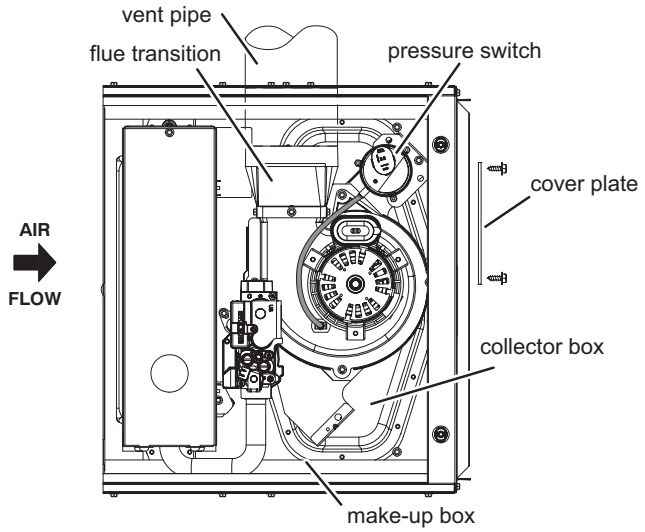

- Gas supply piping must be brought into the unit from the bottom in order to accommodate the flue pipe.
- Remove make-up box assembly (2 screws) and cut wire tie to free make-up box wires. Re-install make-up box on other side of cabinet.
- Re-secure make-up box wires by either pulling excess wires through the blower compartment and securing with supplied wire tie, or coil excess wire and secure to the gas manifold.

FIGURE 21

HORIZONTAL RIGHT POSITION
Side Vent Discharge - no modifications necessary

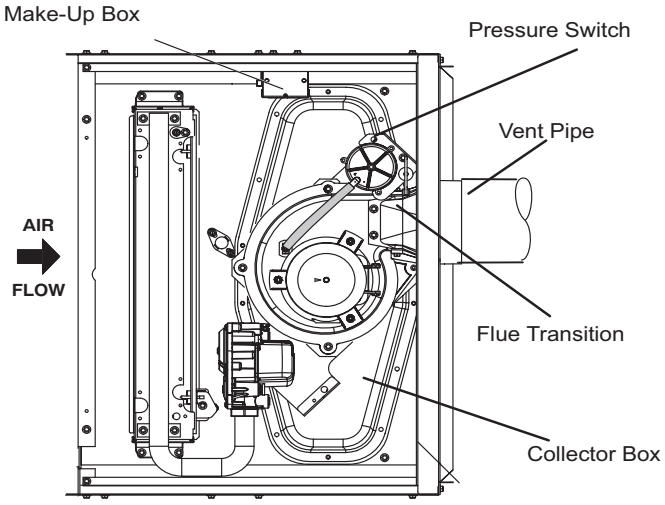

FIGURE 22

The ML180UHE(K) series units are classified as fan-assisted Category I furnaces when vertically vented according to the latest edition of National Fuel Gas Code (NFPA 54 / ANSI Z223.1) in the USA. A fan-assisted Category I furnace is an appliance equipped with an integral mechanical means to either draw or force combustion products through the combustion chamber and/or heat exchanger. The ML180UHE(K) is not approved for use with horizontal venting.

NOTE - *Use these instructions as a guide. They do not supersede local codes. This furnace must be vented according to all local codes these installation instructions, and the provided venting tables in these instructions*

The venting tables in this manual were extracted from the National Fuel Gas Code (NFPA 54 / ANSI Z223.1) and are provided as a guide for proper vent installation. Proper application, termination, construction and location of vents must conform to local codes having jurisdiction. In the absence of local codes, the NFGC serves as the defining document.

Use self-drilling sheet metal screws or a mechanical fastener to firmly secure the vent pipe to the round collar of the flue transition. If self-drilling screws are used to attach the vent pipe, it is recommended that three be used. Drive one self-drilling screw through the front and one through each side of the vent pipe and collar. See FIGURE 23.

Install the first vent connector elbow at a minimum of six inches (152 mm) from the furnace vent outlet. See FIGURE 23.

Venting Using a Masonry Chimney

The following additional requirements apply when a lined masonry chimney is used to vent this furnace. Masonry chimneys used to vent Category I central furnaces must be either tile-lined or lined with a listed metal lining system or dedicated gas vent. Unlined masonry chimneys are prohibited. See FIGURE 24 and FIGURE 25 for common venting.

A chimney with one or more sides exposed to the outside of the structure is considered to be an exterior chimney.

An exterior masonry chimney that is not tile-lined must be lined with B1 vent or a listed insulated flexible metal vent. An exterior tile-lined chimney that is sealed and capped may be lined with a listed uninsulated flexible metal vent. If the existing chimney will not accommodate a listed metal liner, either the chimney must be rebuilt to accommodate one of these liners or an alternate approved venting method must be found.

Insulation for the flexible vent pipe must be an encapsulated fiberglass sleeve recommended by the flexible vent pipe manufacturer. See FIGURE 24. Refer to the tables and the venting information contained in these instructions to properly size and install the venting system.

⚠ IMPORTANT

Once the venting system is installed, attach the "Disconnected Vent" warning sticker to a visible area of the plenum near the vent pipe. See FIGURE 23. The warning sticker is provided in the bag assembly. Order Kit 66W04 for additional stickers.

⚠ WARNING

Asphyxiation hazard. The exhaust vent for this furnace must be securely connected to the furnace flue transition at all times..

VENT CONNECTION UPFLOW AND HORIZONTAL POSITION

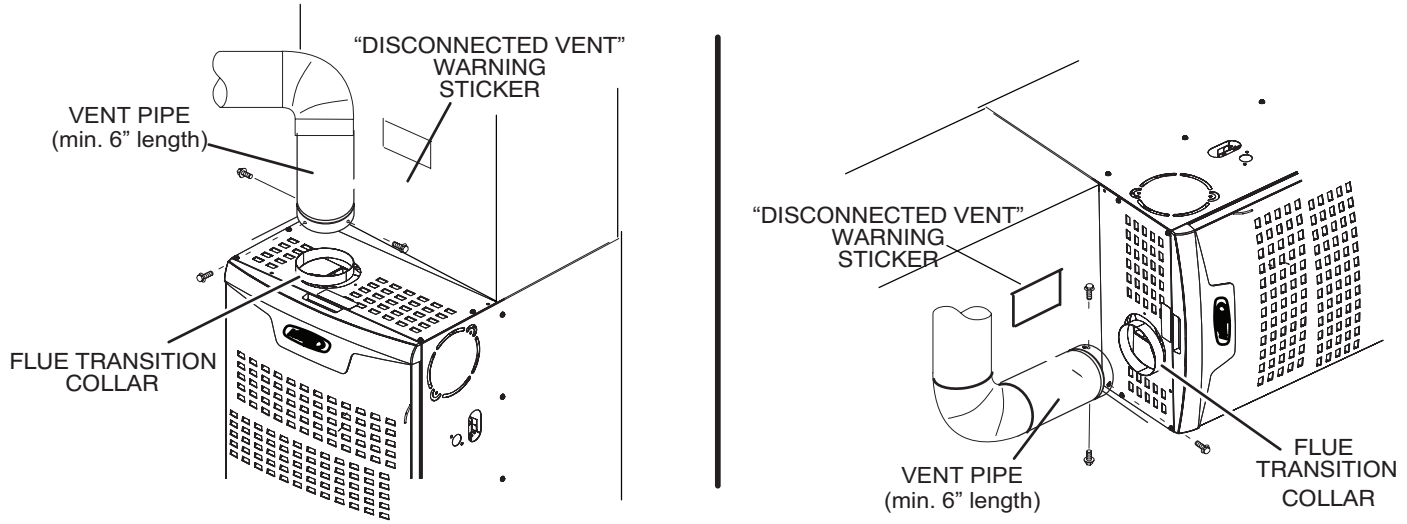

FIGURE 23

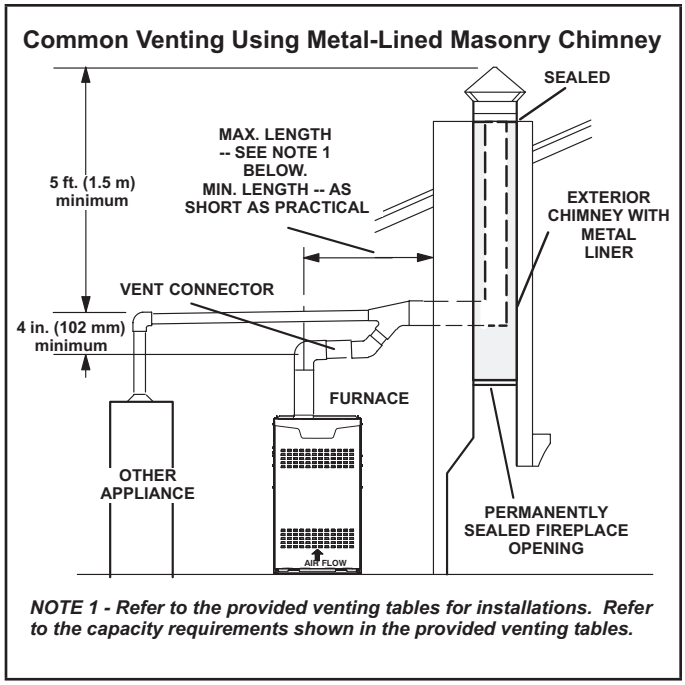

FIGURE 24

DO NOT insulate the space between the liner and the chimney wall with puffed mica or any other loose granular insulating material.

⚠ IMPORTANT

SINGLE appliance venting of a fan-assisted furnace into a tile-lined masonry chimney (interior or outside wall) is PROHIBITED. The chimney must first be lined with either type B1 vent or an insulated single wall flexible vent lining system which has been sized according to the provided venting tables and the vent pipe manufacturer's instructions.

A fan-assisted furnace may be commonly vented into an existing lined masonry chimney if the following conditions are met:

- The chimney is currently serving at least one draft-hoodequipped appliance;
- The vent connectors and chimney are sized according o the provided venting tables.

If type B1 double-wall vent is used inside a chimney, no other appliance can be vented into the chimney. The outer wall of type B1 vent pipe must not be exposed to flue products. A type B1 vent or masonry chimney liner shall terminate above the roof surface with a listed cap or a listed roof assembly according to the terms of their respective listings and the vent manufacturer's instructions.

When inspection reveals that an existing chimney is not safe for the intended purpose, it shall be rebuilt to conform to nationally recognized standards, lined or relined with suitable materials, or replaced with a gas vent or chimney suitable for venting ML180UHE(K) series units. The chimney passageway must be checked periodically to ensure that it is clear and free of obstructions.

Do not install a manual damper, barometric draft regulator, or flue restrictor between the furnace and the chimney.

Never connect a Category I appliance to a chimney that is servicing a solid-fuel appliance. If a fireplace chimney flue is used to vent this appliance, the fireplace opening must be permanently sealed.

A type B or listed chimney lining system that passes through an unused masonry chimney flue is not considered to be exposed to the outdoors.

General Venting Requirements

Vent all ML180UHE(K) furnaces according to these instructions:

1 - Vent diameter recommendations and maximum allowable piping runs are found in the provided venting tables.

2 - In no case should the vent or vent connector diameter be less than the diameter specified in the provided venting tables.

3 - The minimum vent capacity determined by the sizing tables must be less than the low fire input rating and the maximum vent capacity must be greater than the high fire input rating.

4 - Single appliance vents - If the vertical vent or tile-lined chimney has a larger diameter or flow area than the vent connector, use the vertical vent diameter to determine the minimum vent capacity and the vent connector diameter to determine the maximum vent capacity. The flow area of the vertical vent, however, shall not exceed 7 times the flow area of the listed appliance categorized vent area, drafthood outlet area or flue collar area unless designed according to approved engineering methods.

5 - Multiple appliance vents - The flow area of the largest section of vertical vent or chimney shall not exceed 7 times the smallest listed appliance categorized vent area, drafthood outlet area or flue collar area unless designed according to approved engineering methods.

6 - The entire length of single wall metal vent connector shall be readily accessible for inspection, cleaning, and replacement.

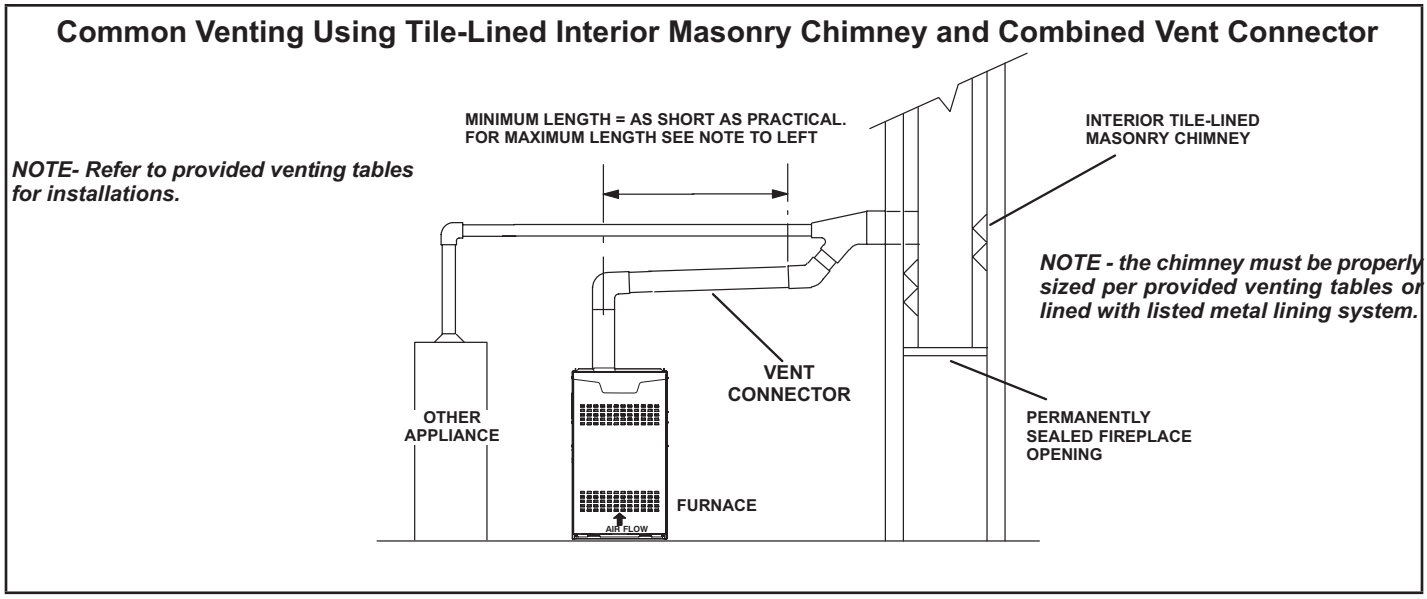

FIGURE 25

7 - Single appliance venting configurations with zero lateral lengths (TABLE 3) are assumed to have no elbows in the vent system. For all other vent configurations, the vent system is assumed to have two 90° elbows. For each additional 90° elbow or equivalent (for example two 45° elbows equal one 90° elbow) beyond two, the maximum capacity listed in the venting table should be reduced by 10% (0.90 x maximum listed capacity).

8 - The common venting (TABLE 5) were generated using a maximum horizontal vent connector length of 1-1/2 feet (.46 m) for each inch (25 mm) of connector diameter as follows:

TABLE 2

Connector Diameter inches (mm)	Maximum Horizontal Connector Length feet (m)
3 (76)	4-1/2 (1.37)
4 (102)	6 (1.83)
5 (127)	7-1/2 (2.29)
6 (152)	9 (2.74)
7 (178)	10-1/2 (3.20)

9 - If the common vertical vent is offset, the maximum common vent capacity listed in the common venting tables should be reduced by 20%, the equivalent of two 90° elbows (0.80 x maximum common vent capacity). The horizontal length of the offset shall not exceed 1-1/2 feet (.46 m) for each inch (25 mm) of common vent diameter.

NOTE - *For any Low GWP refrigerant systems with exposed line set joints installed in the same space, each non-direct vent furnace system must have a refrigerant detection sensor installed below the level of the burners (See Secondary Sensor Requirements Page 30). Any direct vent furnace system is not subject to this requirement.*

10 - The vent pipe should be as short as possible with the least number of elbows and angles required to complete the job. Route the vent connector to the vent using the shortest possible route.

11 - A vent connector shall be supported without any dips or sags and shall slope a minimum of 1/4 inch (6.4 mm) per linear foot (305 mm) of connector, back toward the appliance.

12 - Vent connectors shall be firmly attached to the furnace flue collar by self-drilling screws or other approved means, except vent connectors of listed type B vent material which shall be assembled according to the manufacturer's instructions. Joints between sections of single wall connector piping shall be fastened by screws or other approved means.

13 - When the vent connector used for Category I appliances must be located in or pass through a crawlspace, attic or other areas which may be cold, that portion of the vent connector shall be constructed of listed double-wall type B vent material or material having equivalent insulation qualities.

14 - All venting pipe passing through floors, walls, and ceilings must be installed with the listed clearance to combustible materials and be fire stopped according to local codes. In absence of local codes, refer to NFGC (Z223.1).

15 - No portion of the venting system can extend into, or pass through any circulation air duct or plenum.

16 - Vent connectors serving Category I appliances shall not be connected to any portion of mechanical draft systems operating under positive pressure such as Category III or IV venting systems.

17 - If vent connectors are combined prior to entering the common vent, the maximum common vent capacity listed in the common venting tables must be reduced by 10%, the equivalent of one 90° elbow (0.90 x maximum common vent capacity).

18 - The common vent diameter must always be at least as large as the largest vent connector diameter.

19 - In no case, shall the vent connector be sized more than two consecutive table size diameters over the size of the draft hood outlet or flue collar outlet.

20 - Do not install a manual damper, barometric draft regulator or flue restrictor between the furnace and the chimney.

21 - When connecting this appliance to an existing dedicated or common venting system, you must inspect the venting system's general condition and look for signs of corrosion. The existing vent pipe size must conform to these instructions and the provided venting tables. If the existing venting system does not meet these requirements, it must be resized.

TABLE 3

Capacity of Type B Double-Wall Vents with Type B Double-Wall Connectors

Serving a Single Category I Appliance

Height H (feet)	Lateral L (feet)	Vent and Connector Diameter - D (inches)							
		3 inch		4 inch		5 inch		6 inch	
		Appliance Input Rating in Thousands of Btu Per Hour							
		Min	Max	Min	Max	Min	Max	Min	Max
6	0	0	78	0	152	0	251	0	375
	2	13	51	18	97	27	157	32	232
	4	21	49	30	94	39	153	50	227
	6	25	46	36	91	47	149	59	223
8	0	0	84	0	165	0	276	0	415
	2	12	57	16	109	25	178	28	263
	5	23	53	32	103	42	171	53	255
	8	28	49	39	98	51	164	64	247
10	0	0	88	0	175	0	295	0	447
	2	12	61	17	118	23	194	26	289
	5	23	57	32	113	41	187	52	280
	10	30	51	41	104	54	176	67	267
15	0	0	94	0	191	0	327	0	502
	2	11	69	15	136	20	226	22	339
	5	22	65	30	130	39	219	49	330
	10	29	59	40	121	51	206	64	315
	15	35	53	48	112	61	195	76	301
20	0	0	97	0	202	0	349	0	540
	2	10	75	14	149	18	250	20	377
	5	21	71	29	143	38	242	47	367
	10	28	64	38	133	50	229	62	351
	15	34	58	46	124	59	217	73	337
	20	48	52	55	116	69	206	84	322
30	0	0	100	0	213	0	374	0	587
	2	9	81	13	166	14	283	18	432
	5	21	77	28	160	36	275	45	421
	10	27	70	37	150	48	262	59	405
	15	33	64	44	141	57	249	70	389
	20	56	58	53	132	66	237	80	374
	30	NA	NA	73	113	88	214	104	346

NOTE - Single appliance venting configurations with zero lateral lengths are assumed to have no elbows in the vent system. For all other vent configurations, the vent system is assumed to have two 90° elbows. For each additional 90° elbow or equivalent (for example two 45° elbows equal one 90° elbow) beyond two, the maximum capacity listed in the venting table should be reduced by 10 percent (0.90 x maximum listed capacity).

TABLE 4

Vent Connector Capacity

Type B Double-Wall Vents with Type B Double-Wall Connectors

Serving Two or More Category I Appliances

Height H (feet)	Lateral L (feet)	Vent and Connector Diameter - D (inches)							
		3 inch		4 inch		5 inch		6 inch	
		Appliance Input Rating in Thousands of Btu Per Hour							
		Min	Max	Min	Max	Min	Max	Min	Max
6	1	22	37	35	66	46	106	58	164
	2	23	41	37	75	48	121	60	183
	3	24	44	38	81	49	132	62	199
8	1	22	40	35	72	49	114	64	176
	2	23	44	36	80	51	128	66	195
	3	24	47	37	87	53	139	67	210
10	1	22	43	34	78	49	123	65	189
	2	23	47	36	86	51	136	67	206
	3	24	50	37	92	52	146	69	220
15	1	21	50	33	89	47	142	64	220
	2	22	53	35	96	49	153	66	235
	3	24	55	36	102	51	163	68	248
20	1	21	54	33	99	46	157	62	246
	2	2	57	34	105	48	167	64	259
	3	23	60	35	110	50	176	66	271
30	1	20	62	31	113	45	181	60	288
	2	21	64	33	118	47	190	62	299
	3	22	66	34	123	48	198	64	309

TABLE 5

Common Vent Capacity

Type B Double-Wall Vents with Type B Double-Wall Connectors

Serving Two or More Category I Appliances

Vent Height H (feet)	Vent and Connector Diameter - D (inches)							
	4 inch		5 inch		7 inch		7 inch	
	Appliance Input Rating in Thousands of Btu Per Hour							
	FAN + FAN	FAN + NAT	FAN + FAN	FAN + NAT	FAN + FAN	FAN + NAT	FAN + FAN	FAN + NAT
6	92	81	140	116	204	161	309	248
8	101	90	155	129	224	178	339	275
10	110	97	169	141	243	194	367	299
15	125	112	195	164	283	228	427	352
20	136	123	215	183	314	255	475	394
30	152	138	244	210	361	297	547	459

Removal of the Furnace from Common Vent

In the event that an existing furnace is removed from a venting system commonly run with separate gas appliances, the venting system is likely to be too large to properly vent the remaining attached appliances. Conduct the following test while each appliance is operating and the other appliances (which are not operating) remain connected to the common venting system. If the venting system has been installed improperly, you must correct the system as indicated in the general venting requirements section.

⚠ IMPORTANT

CARBON MONOXIDE POISONING HAZARD Failure to follow the steps outlined below for each appliance connected to the venting system being placed into operation could result in carbon monoxide poisoning or death. The following steps shall be followed for each appliance connected to the venting system being placed into operation, while all other appliances connected to the venting system are not in operation:

1 - Seal any unused openings in the common venting system.

2 - Inspect the venting system for proper size and horizontal pitch. Determine that there is no blockage, restriction, leakage, corrosion, or other deficiencies which could cause an unsafe condition.

3 - Close all building doors and windows and all doors between the space in which the appliances remaining connected to the common venting system are located and other spaces of the building. Turn on clothes dryers and any appliances not connected to the common venting system. Turn on any exhaust fans, such as range hoods and bathroom exhausts, so they will operate at maximum speed. Do not operate a summer exhaust fan. Close fireplace dampers.

4 - Follow the lighting instructions. Turn on the appliance that is being inspected. Adjust the thermostat so that the appliance operates continuously.

5 - After the burner have operated for 5 minutes, test for leaks of flue gases at the draft hood relief opening. Use the flame of a match or candle.

6 - After determining that each appliance connected to the common venting system is venting properly, (step 3) return all doors, widows, exhaust fans, fireplace dampers, and any other gas-burning appliances to their previous mode of operation.

7 - If a venting problem is found during any of the preceding tests, the common venting system must be modified to correct the problem. Resize the common venting system to the minimum vent pipe size determined by using the appropriate tables in Appendix G. (These are in the current standards of the National Fuel Gas Code ANSI Z223.1.

Gas Piping

Gas supply piping should not allow more than 0.5”W.C. drop in pressure between gas meter and unit. Supply gas pipe must not be smaller than unit gas connection.

⚠ WARNING

Do not over torque (800 in-lbs) or under torque (350 in-lbs) when attaching the gas piping to the gas valve.

⚠ CAUTION

If a flexible gas connector is required or allowed by the authority that has jurisdiction, black iron pipe shall be installed at the gas valve and extend outside the furnace cabinet. The flexible connector can then be added between the black iron pipe and the gas supply line.

Gas Supply

1 - This unit is shipped standard for left or right side installation of gas piping (or top entry in horizontal applications). Connect the gas supply piping into the gas valve. The maximum torque is 800 in lbs and minimum torque is 350 in lbs when when attaching the gas piping to the gas valve.

2 - When connecting the gas supply piping, consider factors such as length of run, number of fittings, and furnace rating to avoid excessive pressure drop. TABLE 6 lists recommended pipe sizes for typical applications.

3 - The gas piping must not run in or through air ducts, clothes chutes, gas vents or chimneys, dumb waiters, or elevator shafts.

4 - The piping should be sloped 1/4 inch (6.4 mm) per 15 feet (4.57 m) upward toward the meter from the furnace. The piping must be supported at proper intervals [every 8 to 10 feet (2.44 to 3.01 m)] with suitable hangers or straps. Install a drip leg in vertical pipe runs to the unit.

5 - A 1/8” N.P.T. plugged tap or pressure post is located on the gas valve to facilitate test gauge connection. See FIGURE 37 and FIGURE 38.

6 - In some localities, codes may require the installation of a manual main shut-off valve and union (furnished by the installer) external to the unit. The union must be of the ground joint type.

⚠ IMPORTANT

Compounds used on threaded joints of gas piping must be resistant to the actions of liquified petroleum gases.

NOTE - *If emergency shutoff is necessary, shut off the main manual gas valve and disconnect main power to the furnace. The installer should properly label these devices*

TABLE 6

Gas Pipe Capacity - ft3/hr (m3/hr)

Nominal Iron Pipe Size Inches (mm)	Internal Diameter inches (mm)	Length of Pipe - feet (m)									
		10 (3.048)	20 (6.096)	30 (9,144)	40 (12,192)	50 (15.240)	60 (18.288)	70 (21.336)	80 (24.384)	90 (27.432)	100 (30,480)
1/2 (12.7)	.622 (17.799)	172 (4.87)	118 (3.34)	95 (2.69)	81 (2.29)	72 (2.03)	65 (1.84)	60 (1.69)	56 (1.58)	52 (1.47)	50 (1.42)
3/4 (19.05)	.824 (20.930)	360 (10.19)	247 (7.000)	199 (5.63)	170 (4.81)	151 (4.23)	137 (3.87)	126 (3.56)	117 (3.31)	110 (3.11)	104 (2.94)
1 (25.4)	1.049 (26.645)	678 (19.19)	466 (13.19)	374 (10.59)	320 (9.06)	284 (8.04)	257 (7.27)	237 (6.71)	220 (6.23)	207 (5.86)	195 (5.52)
1-1/4 (31.75)	1.380 (35.052)	1350 (38.22)	957 (27.09)	768 (22.25)	657 (18.60)	583 (16.50)	528 (14.95)	486 (13.76)	452 (12.79)	424 (12.00)	400 (11.33)
1-1/2 (38.1)	1.610 (40.894)	2090 (59.18)	1430 (40.49)	1150 (32.56)	985 (27.89)	873 (24.72)	791 (22.39)	728 (20.61)	677 (19.17)	635 (17.98)	600 (17.00)
2 (50.8)	2.067 (52.502)	4020 (113.83)	2760 (78.15)	2220 (62.86)	1900 (53.80)	1680 (47.57)	1520 (43.04)	1400 (39.64)	1300 (36.81)	1220 (34.55)	1160 (32.844)
2-1/2 (63.5)	2.469 (67.713)	6400 (181.22)	4400 (124.59)	3530 (99.95)	3020 (85.51)	2680 (75.88)	2480 (70.22)	2230 (63.14)	2080 (58.89)	1950 (55.22)	1840 (52.10)
3 (76.2)	3.068 (77.927)	11300 (319.98)	7780 (220.30)	6250 (176.98)	5350 (151.49)	4740 (134.22)	4290 (121.47)	3950 (111.85)	3670 (103.92)	3450 (97.69)	3260 (92.31)

NOTE - *Capacity given in cubic feet (m3) of gas per hour and based on 0.60 specific gravity gas.*

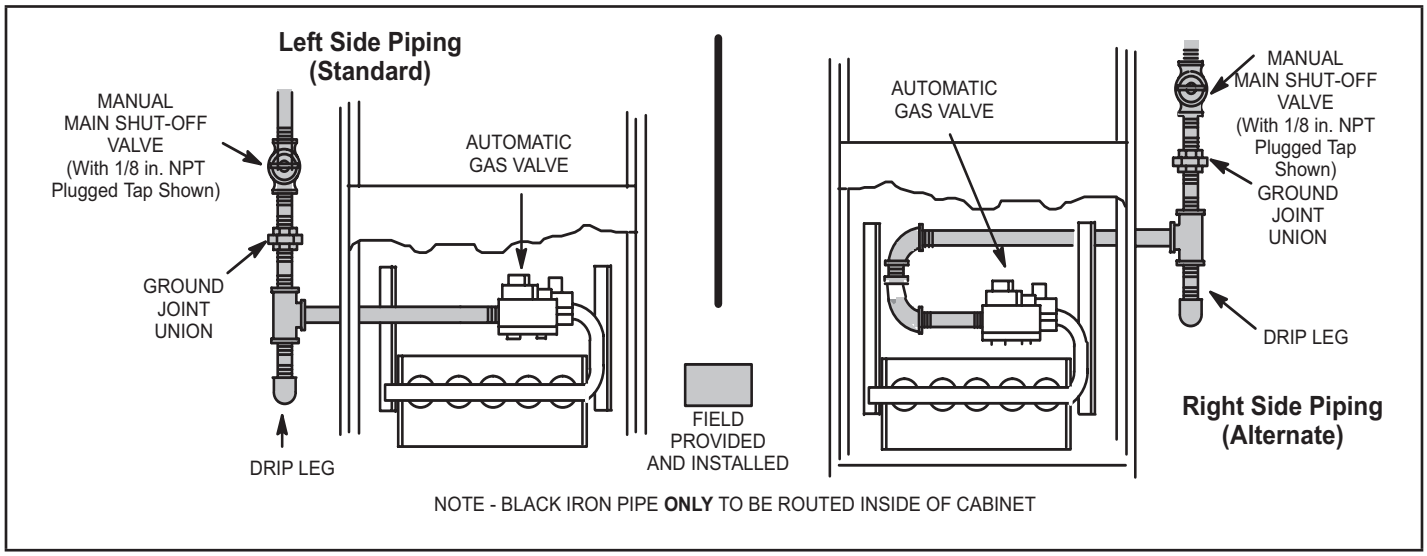

FIGURE 26

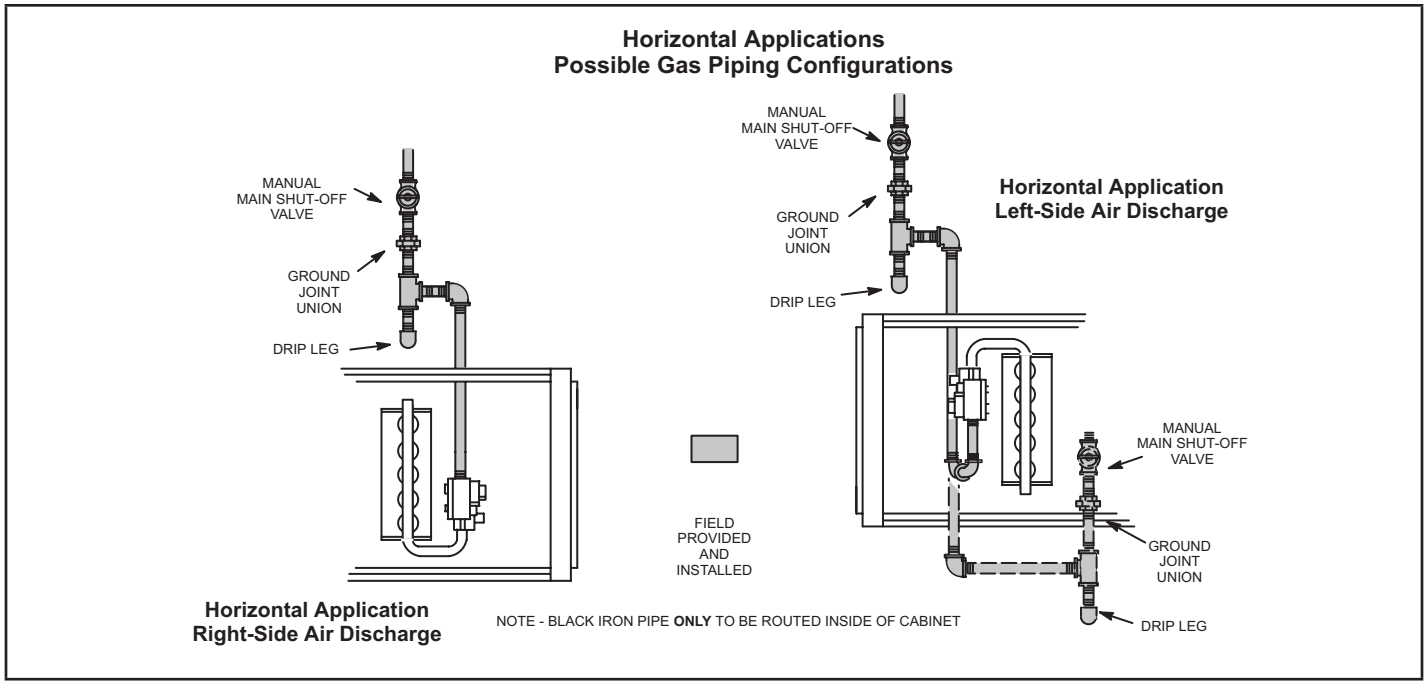

FIGURE 27

Leak Check

After gas piping is completed, carefully check all field-installed piping connections for gas leaks. Use a commercially available leak detecting solution specifically manufactured for leak detection. Never use an open flame to test for gas leaks.

NOTE - *If emergency shutoff is necessary, shut off the main manual gas valve and disconnect the main power to the furnace. The installer should properly label these devices.*

⚠ CAUTION

Some soaps used for leak detection are corrosive to certain metals. Carefully rinse piping thoroughly after eak test has been completed. Do not use matches, candles, flame or other sources of ignition to check for gas leaks.

The furnace must be isolated from the gas supply system by closing the individual manual shut-off valve during any gas supply system at pressures greater than or equal to ½ psig. (3.48 kPa, 14 inches w.c.). This furnace and its components are designed, manufactured and independently certified to comply with all applicable ANSI/CSA standards. A leak check of the furnace and its components is not required.

⚠ IMPORTANT

When testing pressure of gas lines, gas valve must be disconnected and isolated. See FIGURE 28. Gas valves can be damaged if subjected to pressures greater than 1/2 psig (3.48 kPa, 14 inches w.c.).

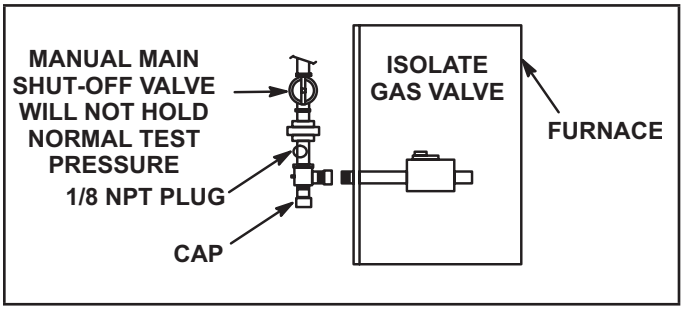

FIGURE 28

Electrical

ELECTROSTATIC DISCHARGE (ESD)
Precautions and Procedures

⚠ CAUTION

Electrostatic discharge can affect electronic components. Take precautions to neutralize electrostatic charge by touching your hand and tools to metal prior to handling the control.

⚠ IMPORTANT

When matching this gas furnace with zoning, dual fuel or other 24V accessories, It is recommended to replace the factory installed transformer with kit 27J32.

Kit 27J32 contains a 75VA transformer, so you do not overload the original 40VA transformer.

⚠ WARNING

Fire Hazard. Use of aluminum wire with this product may result in a fire, causing property damage, severe injury or death. Use copper wire only with this product.

⚠ CAUTION

Failure to use properly sized wiring and circuit breaker may result in property damage. Size wiring and circuit breaker(s) per Product Specifications bulletin (EHB) and unit rating plate.

The unit is equipped with a field make-up box on the left hand side of the cabinet. The make-up box may be moved to the right side of the furnace to facilitate installation. If the make-up box is moved to the right side, clip the wire ties that bundle the wires together. The excess wire must be pulled into the blower compartment. Secure the excess wire to the existing harness to protect it from damage.

INTERIOR MAKE-UP BOX INSTALLATION

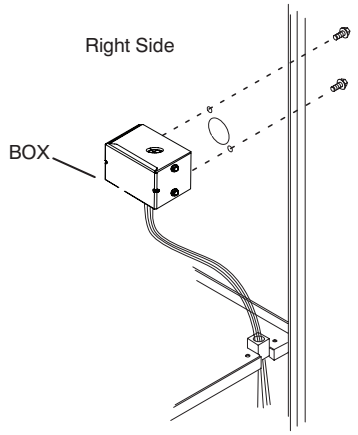

FIGURE 29

Refer to FIGURE 30 for schematic wiring diagram, field wiring and trouble shooting.

The power supply wiring must meet Class I restrictions. Protected by either a fuse or circuit breaker, select circuit protection and wire size according to unit nameplate.

NOTE - *Unit nameplate states maximum current draw. Maximum over-current protection allowed is 15 AMP.*

Holes are on both sides of the furnace cabinet to facilitate wiring.

Install a separate (properly sized) disconnect switch near the furnace so that power can be turned off for servicing. Before connecting the thermostat, check to make sure the wires will be long enough for servicing at a later date. Make sure that thermostat wire is long enough to facilitate future removal of blower for service.

Complete the wiring connections to the equipment. Use the provided unit wiring and field wiring diagram shown in FIGURE 30. Use 18-gauge wire or larger that is suitable for Class II rating for thermostat connections.

⚠ WARNING

Electric Shock Hazard. Can cause injury or death. Unit must be properly grounded in accordance with national and local codes.

Electrically ground the unit according to local codes or, in the absence of local codes, according to the current National Electric Code (ANSI/NFPA No. 70). A green ground wire is provided in the field make-up box.

NOTE - *The ML180UHE(K) furnace contains electronic components that are polarity sensitive. Make sure that the furnace is wired correctly and is properly grounded.*

Generator Use - Voltage Requirements

The following requirements must be kept in mind when specifying a generator for use with this equipment:

- The furnace requires 120 volts + 10% (Range: 108 volts to 132 volts).
- The furnace operates at 60 Hz + 5% (Range: 57 Hz to 63 Hz).
- The furnace integrated control requires both polarity and proper ground. Both polarity and proper grounding should be checked before attempting to operate the furnace on either permanent or temporary power.
- Generator should have a wave form distortion of less than 5% total harmonic distortion.

Thermostat

Install the room thermostat according to the instructions provided with the thermostat. See FIGURE 33 for thermostat designations. If the furnace is being matched with a heat pump, refer to the thermostat installation instructions for set up.

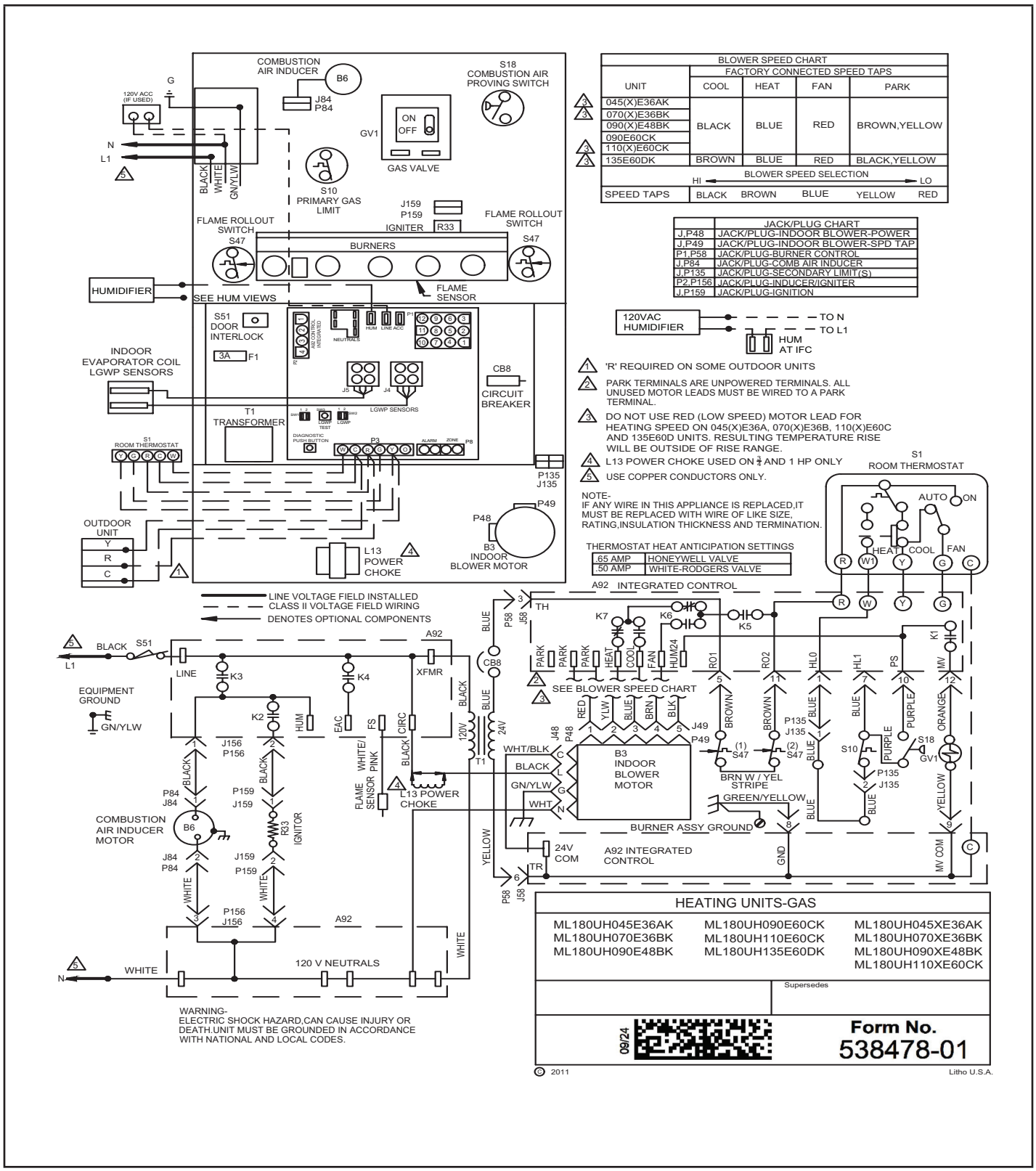
COMBUSTION AIR INDUCER
B6
J84
P84
S18
COMBUSTION AIR PROVING SWITCH
120V ACC (IF USED)
G
N
L1
GV1
ON
OFF
GAS VALVE
BLACK
WHITE
GN/YLW
S10
PRIMARY GAS LIMIT
J159
P159
IGNITER
R33
FLAME ROLLOUT SWITCH
S47
BURNERS
FLAME SENSOR
HUMIDIFIER
SEE HUM VIEWS
S51
DOOR INTERLOCK
3A
F1
INDOOR EVAPORATOR COIL LGWP SENSORS
CB8
CIRCUIT BREAKER
T1
TRANSFORMER
LGWP SENSORS
S1
ROOM THERMOSTAT
P135
J135
P49
P48
B3
INDOOR BLOWER MOTOR
OUTDOOR UNIT
Y
R
C
L13
POWER CHOKE
LINE VOLTAGE FIELD INSTALLED
CLASS II VOLTAGE FIELD WIRING
DENOTES OPTIONAL COMPONENTS
BLOWER SPEED CHART
FACTORY CONNECTED SPEED TAPS
UNIT
COOL
HEAT
FAN
PARK
045(X)E36AK
070(X)E36BK
090(X)E48BK
090E60CK
110(X)E60CK
135E60DK
BLACK
BLUE
RED
BROWN,YELLOW
BROWN
BLUE
RED
BLACK,YELLOW
BLOWER SPEED SELECTION
HI
LO
SPEED TAPS
BLACK
BROWN
BLUE
YELLOW
RED
JACK/PLUG CHART
J,P48 JACK/PLUG-INDOOR BLOWER-POWER
J,P49 JACK/PLUG-INDOOR BLOWER-SPD TAP
P1,P58 JACK/PLUG-BURNER CONTROL
J,P84 JACK/PLUG-COMB AIR INDUCER
J,P135 JACK/PLUG-SECONDARY LIMIT(S)
P2,P156 JACK/PLUG-INDUCER/IGNITER
J,P159 JACK/PLUG-IGNITION
120VAC HUMIDIFIER
TO N
TO L1
HUM AT IFC
'R' REQUIRED ON SOME OUTDOOR UNITS
PARK TERMINALS ARE UNPOWERED TERMINALS. ALL UNUSED MOTOR LEADS MUST BE WIRED TO A PARK TERMINAL.
DO NOT USE RED (LOW SPEED) MOTOR LEAD FOR HEATING SPEED ON 045(X)E36A, 070(X)E36B, 110(X)E60C AND 135E60D UNITS. RESULTING TEMPERATURE RISE WILL BE OUTSIDE OF RISE RANGE.
L13 POWER CHOKE USED ON 3/4 AND 1 HP ONLY
USE COPPER CONDUCTORS ONLY.
NOTE-
IF ANY WIRE IN THIS APPLIANCE IS REPLACED,IT MUST BE REPLACED WITH WIRE OF LIKE SIZE, RATING,INSULATION THICKNESS AND TERMINATION.
THERMOSTAT HEAT ANTICIPATION SETTINGS
.65 AMP HONEYWELL VALVE
.50 AMP WHITE-RODGERS VALVE
S1
ROOM THERMOSTAT
AUTO
ON
HEAT
COOL
FAN
A92 INTEGRATED CONTROL
TH
K7
K6
K5
K1
PARK
HEAT
COOL
FAN
HUM24
RO1
RO2
HL0
HL1
PS
MV
SEE BLOWER SPEED CHART
RED
YLW
BLUE
BRN
BLK
J49
P49
J48
P48
WHT/BLK
BLACK
GN/YLW
WHT
B3
INDOOR BLOWER MOTOR
BROWN
BRN W / YEL STRIPE
GREEN/YELLOW
BURNER ASSY GROUND
S47
S10
S18
GV1
PURPLE
ORANGE
YELLOW
24V COM
A92 INTEGRATED CONTROL
GND
MV COM
TR
BLACK
S51
L1
LINE
K3
K4
A92
XFMR
EQUIPMENT GROUND
GN/YLW
K2
HUM
EAC
FS
CIRC
120V
24V
T1
J156
P156
P84
J84
P159
J159
COMBUSTION AIR INDUCER MOTOR
B6
R33
IGNITOR
WHITE/PINK
FLAME SENSOR
L13 POWER CHOKE
WHITE
120 V NEUTRALS
WARNING-
ELECTRIC SHOCK HAZARD,CAN CAUSE INJURY OR DEATH.UNIT MUST BE GROUNDED IN ACCORDANCE WITH NATIONAL AND LOCAL CODES.
HEATING UNITS-GAS
ML180UH045E36AK
ML180UH070E36BK
ML180UH090E48BK
ML180UH090E60CK
ML180UH110E60CK
ML180UH135E60DK
ML180UH045XE36AK
ML180UH070XE36BK
ML180UH090XE48BK
ML180UH110XE60CK
Supersedes
09/24
Form No.
538478-01
© 2011
Litho U.S.A.

FIGURE 30

Integrated Control DIP Switch Settings

ML180UHEK units are equipped with a single-stage integrated control. This control manages ignition timing, heating mode fan off delays and indoor blower speeds based on selections made using the control dip switches and jumpers. The control includes an internal watchguard feature which automatically resets the ignition control when it has been locked out. After one hour of continuous thermostat demand for heat, the watchguard will break and remake thermostat demand to the furnace and automatically reset the control to relight the furnace.

Accessory Terminals

One line voltage “ACC” 1/4” spade terminal is provided on the furnace integrated control. See FIGURE 33 for integrated control configuration. This terminal is energized when the indoor blower is operating. Any accessory rated up to one amp can be connected to this terminal with the neutral leg of the circuit being connected to one of the provided neutral terminals. If an accessory rated at greater than one amp is connected to this terminal, it is necessary to use an external relay.

One line voltage “HUM” 1/4” spade terminal is provided on the furnace integrated control. See FIGURE 33 for integrated control configuration. This terminal is energized in the heating mode when the combustion air inducer is operating. Any humidifier rated up to one amp can be connected to this terminal with the neutral leg of the circuit being connected to one of the provided neutral terminals. If a humidifier rated at greater than one amp is connected to this terminal, it is necessary to use an external relay.

One 24V ”H” 1/4” spade terminal is provided on the furnace integrated control. See FIGURE 33 for integrated control configuration. The terminal is energized in the heating mode when the combustion air inducer is operating and the pressure switch is closed. Any humidifier rated up to 0.5 amp can be connected to this terminal with the ground leg of the circuit connected to ground or the ”C” terminal.

Indoor Blower Operation DIP Switch Settings

The heat fan-on time of 30 seconds is not adjustable The heat fan-off delay (amount of time that the blower operates after the heat demand has been satisfied) may be adjusted by changing the two position dip switch on the integrated control, to one of four selections. Blower off delay is factory set at 120 seconds. For other blower off delay settings, please refer to the following chart:

Blower Delay Select		
	SW1-1	SW1-2
90	OFF	ON
120	OFF	OFF
180	ON	OFF
210	ON	ON
Factory Setting is 120		

ON BOARD LINKS AND DIAGNOSTIC PUSH BUTTON

See FIGURE 31 and FIGURE 32

⚠ IMPORTANT

Carefully review all configuration information provided. Failure to properly set DIP switches, jumpers and on-board links can result in improper operation!

On-Board Link W951 Heat Pump (R to O)

On-board link W951 is a clippable connection between terminals R and O on the integrated control. W951 must be cut when the furnace is installed in applications which include a heat pump unit and a thermostat which features dual fuel use. If the link is left intact, terminal “O” will remain energized eliminating the HEAT MODE in the heat pump. See FIGURE 32 and FIGURE 33.

Diagnostic Push Button

The diagnostic push button is located adjacent to the seven-segment diagnostic LED. This button is used to enable the Error Code Recall “E” mode and the Flame Signal “F” mode. Press the button and hold it to cycle through a menu of options. Every five seconds a new menu item will be displayed. When the button is released, the displayed item will be selected. Once all items in the menu have been displayed, the menu resumes from the beginning until the button is released.

Thermostat	On Board Links Must NOT Be Cut To Select AC ON System Options	Wiring Connections
Heat / Cool .	DO NOT CUT ANY ON-BOARD LINKS CUT FOR OPTION SELECTION W951 HEAT PUMP	S1 T'STAT FURNACE TERM. STRIP OUTDOOR UNIT W — W R — R G — G C — C — C Y — Y — Y

FIGURE 31

Thermostat	On Board Links Must Be Cut To Select Heat Pump Options	Wiring Connections
Dual Fuel Single Stage Heat Pump ComfortSense thermostat w/ dual fuel capa-bilities	CUT ON-BOARD LINK W951 HEAT PUMP CUT FOR OPTION SELECTION W951 HEAT PUMP	T'STAT FURNACE TERM. STRIP HEAT PUMP R — R — R 67M41* W — W — W O — O — O Y — Y — Y G — G C — C — C

Connect W to W ONLY if using defrost tempering kit 67M41

FIGURE 32

Single Stage, Constant Torque, Non-Communicating
107792-01

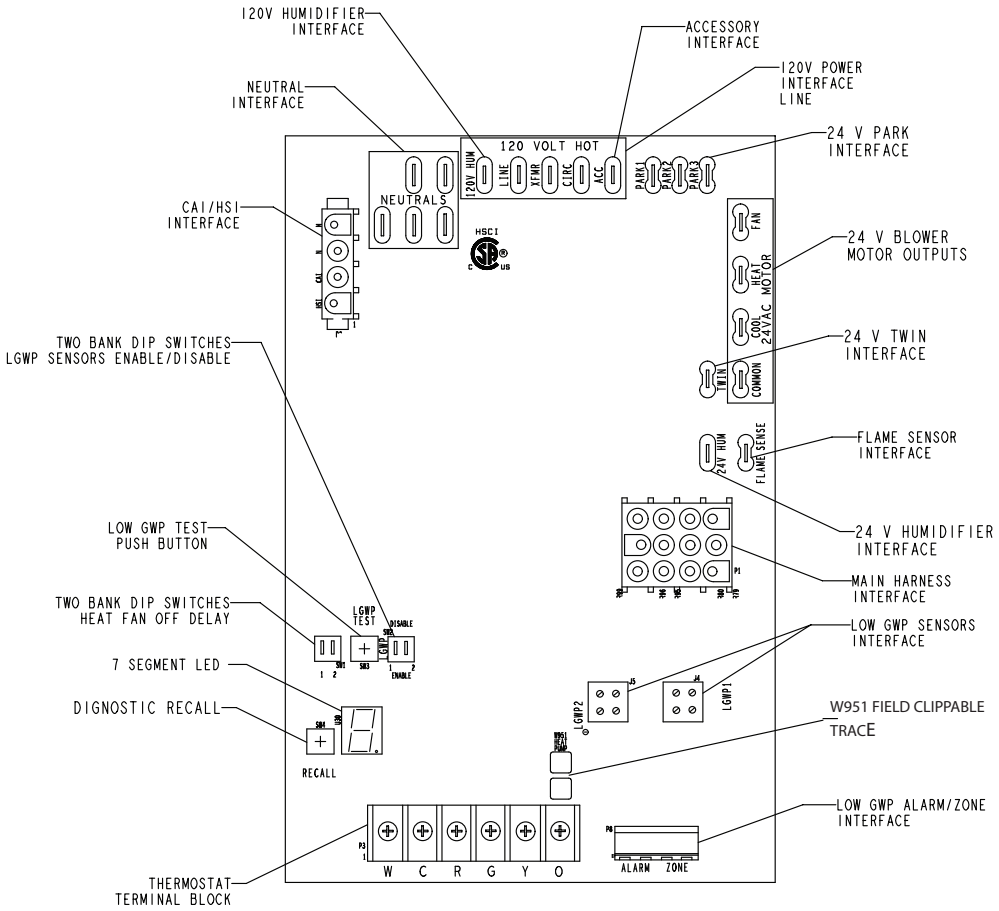

FIGURE 33

TABLE 7

1/4” QUICK CONNECT TERMINALS	
120V HUM	POWER FOR HUMIDIFIER (120 VAC
LINE	INCOMING POWER LINE (120 VAC)
XFMR	TRANSFORMER PRIMARY (120 VAC)
CIRC	INDOOR BLOWER MOTOR (120 VAC)
ACC	ACCESSORY(120 VAC)
24V HUM	HUMIDIFIER (24 VAC)
NEUTRALS	NEUTRAL (5)
3/16” QUICK CONNECT TERMINALS	
COOL	COOL SPEED TAP FROM INDOOR BLOWER MOTOR (24 VAC)
HEAT	HEAT SPEED TAP FROM INDOOR BLOWER MOTOR (24 VAC)
FAN	CONTINUOUS FAN SPEED TAP FROM INDOOR BLOWER MOTOR (24 VAC)
FLAME SENSE	FLAME SENSOR ELECTRODE (120 VAC)
COMMON	COMMON (24 VAC)
TWIN	24V TWINNING COMMUNICATION
PARK	3 TERMINALS TO PARK UNUSED MOTOR SPEED TAPS

TABLE 8

THERMOSTAT INPUT TERMINALS	
W	HEAT
C	COMMON GROUND
R	24V AC
G	FAN
Y	COOL
O	REVERSING VALVE (when W951 is clipped)

TABLE 9

LOW GWP INTERFACE	
LGWP1	LOW GWP SENSOR #1 INTERFACE
LGWP2	LOW GWP SENSOR # 2 INTERFACE
ALARM	INTERFACE TO LOW GWP LEAK AUDIBLE ALARM (DRY CONTACT)
ZONE	INTERFACE TO ZONING CONTROL (DRY CONTACT)
LGWP TEST	PUSH BUTTON TO TEST LOW GWP FUNCTIONALITY

Diagnostic LED (FIGURE 33)

The seven-segment diagnostic LED displays operating status, target airflow, error codes and other information.

Diagnostic Push Button (FIGURE 33)

The diagnostic push button is located adjacent to the seven- segment diagnostic LED. This button is used to enable the Error Code Recall “E” mode and the Flame Signal “F” mode. Press the button and hold it to cycle through a menu of options. Every five seconds a new menu item will be displayed. When the button is released, the displayed item will be selected. Once all items in the menu have been displayed, the menu resumes from the beginning until the button is released

Error Code Recall Mode

Select ”E” from the menu to access the most recent 10 error codes. Select “c” from the Error Code Recall menu to clear all error codes. Button must be pressed a second time while “c” is flashing to confirm command to delete codes. Press the button until a solid “≡” is displayed to exit the Error Code Recall mode.

Flame Signal Mode

Select ”F” from the menu to access the flame signal mode. The integrated control will display the flame current on 7 segment LED in in micro amps (uA).

- Flame signal mode is exited after the following:
- Power is reset
- Pressing and holding push button until 3 horizontal
- lines “≡” are displayed
- 10 minutes of entering the flame sense mode.

Integrated Diagnostic Codes/Status of Equipment

Code	Diagnostic Codes/Status of Equipment
A	Indoor Blower Operation: Continuous Fan only mode
dF	Defrost mode
.	Idle mode (Decimal blinks at 1 Hertz -- 0.5 second ON, 0.5 second OFF).
C	Cooling stage (1 second ON, 0.5 second OFF) 1 or 2 displayed / Pause / Repeat codes.
d	Dehumidification mode (1 second ON, 1 second OFF) / Pause / Repeat Codes).
H	Gas Heat Stage (1 second ON, 0.5 second OFF) 1 or 2 displayed / Pause / Repeat codes. Blinking during ignition.
h	Heat pump stage.
* No change implies the display will continue to show whatever is currently being displayed for normal operation (blinking decimal, active error code, heat state, etc.)	

Code	Diagnostic Codes/Status of Equipment	Action Required to Clear and Recover
E000	No error in memory	No active fault exists, or all faults have been cleared
E106	Twin Communication Fault	This may indicate: 1) The power is removed from one furnace and not the other or/and 2) The 24 VAC supply to the twins are not in phase
E110	Low line voltage.	Line Voltage Low (Voltage lower than nameplate rating). Check power line voltage and correct. Alarm clears 5 seconds after fault recovered.
E111	Line voltage polarity reversed.	Reverse line power voltage wiring. System resumes normal operation 5 seconds after fault recovered.
E112	Ground not detected.	System shuts down. Provide proper earth ground. System resumes normal operation 5 seconds after fault recovered.
E113	High line voltage.	Line Voltage High (Voltage higher than nameplate rating). Provide power voltage within proper range. System resumes normal operation 5 seconds after fault recovered.
E114	Line voltage frequency out-of-range.	No 60 Hertz Power. Check voltage and line power frequency. Correct voltage and frequency problems. System resumes normal operation 5 seconds after fault recovered.
E115	Low 24V - Control will restart if the error recovers.	24-Volt Power Low (Range is 18 to 30 volts). Check and correct voltage. Check for additional power-robbing equipment connected to system. May require installation of larger VA transformer to be installed in furnace / air handler. Clears after fault recovered.
E117	Poor ground detected (Warning only).	Provide proper grounding for unit. Check for proper earth ground to the system. Warning only will clear 30 seconds after fault recovered.

Code	Diagnostic Codes/Status of Equipment	Action Required to Clear and Recover
E125	Control failed self-check, internal error, failed hardware. Will restart if error recovers. Integrated control not communicating. Covers hardware errors (flame sense circuit faults, pin shorts, etc.).	Hardware problem on the control. Cycle power on control. Replace if problem prevents service and is persistent. Critical alert. Cleared 300 seconds after fault recovered.
E150	Refrigerant Leak detected	This may indicate the presence of a leak at or in the indoor unit coil of the equipment, that will need to be repaired for proper and safe system operation. Additionally, it may indicate that proper refrigerant charge will need to be verified. This fault cannot be cleared while the refrigerant detection system sensor is reporting the presence of a leak
E151	Refrigerant Leak Detector Sensor #1 fault	The refrigerant detection sensor #1 in the unit is reporting an issue that prevents it from functioning properly, and replacement of the sensor may be necessary. This fault clears when the sensor no longer reports the presence of a fault condition.
E152	Refrigerant Leak Detector Sensor #2 fault	The refrigerant detection sensor #2 in the unit is reporting an issue that prevents it from functioning properly, and replacement of the sensor may be necessary. This fault clears when the sensor no longer reports the presence of a fault condition.
E154	Refrigerant Leak Detector Sensor #1 Communication lost or invalid sensor dip switch configuration (Disable/Enable))	There may be an issue with the wiring harness connecting the sensor #1 to the furnace control board, either with the wiring itself or with the connector. Check the wiring and the connector for damage or improper connectivity. Check the sensor for damage or obstruction on the harness plug. This fault clears when communications with the sensor has been reestablished, but blower latches for a minimum of 5 minutes. Retest of the presence of fault can be effected by pressing the Low GWP test button on the furnace unit control board. This may also indicate incorrect Low GWP dip switch settings. Please refer to installation instructions.
E155	Refrigerant Leak Detector Sensor #2 Communication lost	There may be an issue with the wiring harness connecting the sensor #2 to the furnace control board, either with the wiring itself or with the connector. Check the wiring and the connector for damage or improper connectivity. Check the sensor for damage or obstruction on the harness plug. This fault clears when communications with the sensor has been reestablished, but blower latches for a minimum of 5 minutes. Retest of the presence of fault can be effected by pressing the Low GWP test button on the furnace unit control board
E160	Refrigerant Leak Detector Sensor #1 type incorrect	The sensor #1 is of a type not suitable for use in the application. Replace the sensor with a Lennox approved replacement part. This fault clears when a sensor suitable for the application is detected by the furnace control board, but blower will latch for a minimum of 5 minutes. Retest of the presence of the fault can be effected by pressing the Low GWP test button on the furnace unit control board.
E161	Refrigerant Leak Detector Sensor #2 type incorrect	The sensor #2 is of a type not suitable for use in the application. Replace the sensor with a Lennox approved replacement part. This fault clears when a sensor suitable for the application is detected by the furnace control board, but blower will latch for a minimum of 5 minutes. Retest of the presence of the fault can be effected by pressing the Low GWP test button on the furnace unit control board.
E163	Furnace Control Board Failure	There is an issue with the furnace control board, preventing the furnace from operating properly. This may require the replacement of the indoor unit control board. This fault clears when the furnace controller operates normally.

Code	Diagnostic Codes/Status of Equipment	Action Required to Clear and Recover
E164	Low GWP Test	Low GWP Test mode activates by manually engaging Low GWP test button. Normal operations resumes and code clears automatically after 1-minute
E200	Hard lockout - Rollout circuit open or previously open.	Correct cause of rollout trip, or replace flame rollout switch. Test furnace operation. Cleared after fault recovered.
E204	Gas valve mis-wired.	Check gas valve operation and wiring. Clears when repaired.
E223	Pressure switch failed open.	Check pressure (inches w.c.) of pressure switch closing on heat call. Measure operating pressure (inches w.c.). Inspect vent and combustion air inducer for correct operation and restriction. Resumes normal operation after fault is cleared.
E224	Pressure switch failed closed.	Check pressure (inches w.c.) of pressure switch closing on heat call. Measure operating pressure (inches w.c.). Inspect vent and combustion air inducer for correct operation and restriction. Resumes normal operation after fault is cleared.
E227	Pressure switch open during trial for ignition or run mode.	Check pressure (inches w.c.) of pressure switch closing on heat call. Measure operating pressure (inches w.c.). Inspect vent and combustion air inducer for correct operation and restriction. Resumes normal operation after fault is cleared.
E240	Low flame current - Run mode.	Check micro-amperes of flame sensor using control diagnostics or field-installed mode. Clean or replace sensor. Measure voltage of neutral to ground to ensure good unit ground. Alert clears after current heat call has been completed. See TABLE 19 for flame signal.
E241	Flame sensed out of sequence - Flame still present.	Shut off gas. Check for gas valve leak. Replace, if necessary. Alert clears when fault is recovered.
E250	Limit switch circuit open.	Check for proper firing rate on furnace. Ensure there is no blockage in heater. Check for proper air flow. If limit not closed within 3 minutes, unit will go into 1-hour soft lockout. Resumes normal operation after fault is cleared.
E270	Soft lockout - Exceeded maximum number of retries. No flame current sensed.	Check for proper gas flow. Ensure that ignitor is lighting burner. Check flame sensor current. Clears when heat call finishes successfully.
E271	Soft lockout - Exceeded maximum number of retries. Last retry failed due to the pressure switch opening.	Check pressure (inches w.c.) of pressure switch closing on heat call. Measure operating pressure (inches w.c.). Inspect vent and combustion air inducer for correct operation and restriction. Clears when heat call finishes successfully.
E272	Soft lockout - Exceeded maximum number of recycles. Last recycle due to the pressure switch opening.	Check operation of low pressure switch to see if it is stuck closed on heat call. Check pressure (inches w.c.) of pressure switch closing on heat call. Measure operating pressure (inches w.c.). Inspect vent and combustion air inducer for correct operation and restriction. Clears when heat call finishes successfully.
E273	Soft lockout - Exceeded maximum number of recycles. Last recycle due to flame failure.	Check micro-amperes of flame sensor using control diagnostics or field-installed mode. Clean or replace sensor. Measure voltage of neutral to ground to ensure good unit ground. Clears when heat call finishes successfully.
E274	Soft lockout - Exceeded maximum number of recycles. Last recycle failed due to the limit circuit opening or limit remained open longer than 3 minutes.	Shut down system. 1-hour soft lockout. Check firing rate and air flow. Check for blockage. Clears when heat call finishes successfully.
E275	Soft lockout - Flame sensed out of sequence. Flame signal is gone.	Shut off gas. Check for gas valve leak. 1-hour soft lockout. Clears when flame has been proven stable.
E290	Ignitor circuit fault - Failed ignitor or triggering circuitry.	Measure resistance of hot surface ignitor. Replace if open or not within specifications. 1-hour soft lockout. Clears when flame has been proven stable.
E390	Low GWP Relay Stuck	This indicates an issue with the Low GWP relay in the furnace control. This may require the replacement of the indoor unit control board. This fault clears when the relay operates normally.

Indoor Blower Speeds

1 - When the thermostat is set to “FAN ON,” the indoor blower will run continuously on the fan speed when there is no cooling or heating demand. See TABLE 11 for allowable circulation speeds.

2 - When the ML180UHE(K) is running in the heating mode, the indoor blower will run on the heating speed. See TABLE 10 for allowable heating speeds.

3 - When there is a cooling demand, the indoor blower will run on the cooling speed.

TABLE 10

Allowable Heating Speeds					
Model Number	**Red**	**Yellow**	**Blue**	**Brown**	**Black**
ML180UH045E36AK	Not Allowed	Allowed	Factory Setting	Allowed	Not Allowed
ML180UH070E36BK	Not Allowed				
ML180UH090E48BK	Allowed				
ML180UH090E60CK					
ML180UH110E60CK	Not Allowed				
ML180UH135E60DK	Not Allowed			No Allowed	

TABLE 11

Allowable Circulation Speeds					
Model Number	**Red**	**Yellow**	**Blue**	**Brown**	**Black**
All Models	Factory Setting	Not Allowed	Not Allowed	Not Allowed	Not Allowed

Twinning Two ML180UHEK Furnaces

The control board in this furnace is equipped with a provision to ”twin” (interconnect) two(2) adjacent furnaces with a common plenum such that they operate as one (1) large unit.

When twinned, the circulating blower speeds are synchronized between the furnaces. If either furnace has a need to run the blower, both furnaces will run the blower on the same speed. The cooling speed has highest priority, followed by heating speed and fan speed.

Field installation of twinning consists of connecting wires between the “C”, ”O” and ”Twin” terminals of the two controls.

The 24 VAC secondary of the two systems must be in phase. All thermostat connections are made to one control only. See diagram below.

The twinned furnace without thermostat connections is to have the call for heat supplied by an external 24VAC isolation relay* to prevent its rollout switch from being bypassed by the other twinned furnace. The coil of the isolation relay connects from the thermostat ”W” to 24 VAC common. The contacts of the relay connect ”R” to ”W” on the non-thermostat twin. Kit 56L68 is available.

*Wiring and quick connects will be field provided

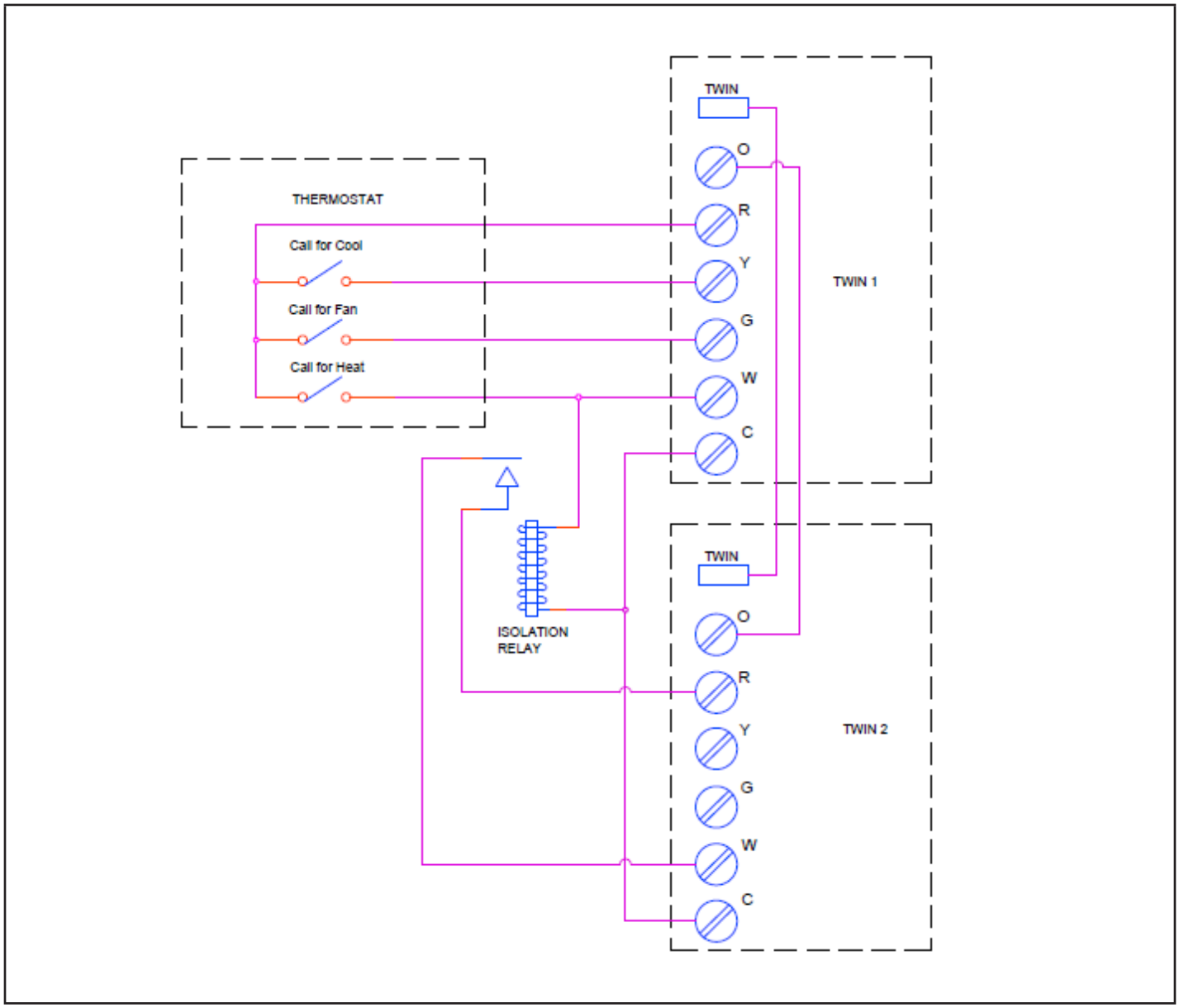

Low GWP Application

⚠ WARNING

For use with Lennox approved evaporator coil and LGWP sensors only. Use original manufacturer recommended LGWP sensors if using non Lennox approved evaporator coil.

CONNECTING THE FURNACE CONTROL BOARD SENSOR.

See FIGURE 36 and follow steps below:

1 - Route sensor wire #1 through provided grommet. Form a drip loop below the control board on upflow installations to prevent condensate dripping on the control board.

2 - Avoid sharp edges when routing sensor wire during installation.

3 - Sensor wire must not block view of 7 segment LED .

Ensure the cable is properly seated into the SENSOR 1 plug (LGWP1). The Molex plug clip should lock into the Molex connection point for a secured connection, as shown below in FIGURE 34. Verify the connection is free of dust, debris, and moisture.

NOTE - *-In confined space applications, connect the second sensor to the LGWP2 sensor plug. Refer to evaporator coil installation instructions for more detail.*

Single Stage Constant Torque Control

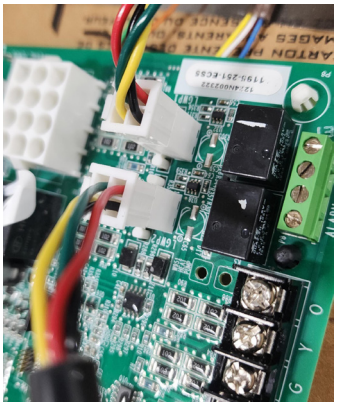

FIGURE 34

LOW GWP DIP SWITCH SETTINGS

Adjust the DIP switch settings to the sensor configuration. Failure to do so will cause faults on power-up. See FIGURE 35 and TABLE 12

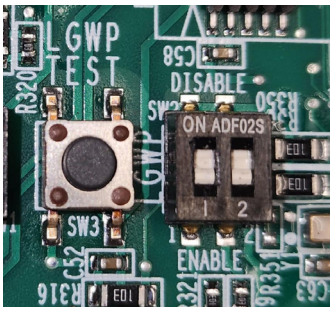

FIGURE 35

TABLE 12

DIP Switch Settings

Configuration	LGWP1	LGWP2
One (1) sensor, connected to SENSOR 1 plug	Enable	Disable
Two (2) sensors, connected to SENSOR 1 plug and SENSOR 2 plug	Enable	Enable
No sensor R410A or heat only applications	Disable	Disable
Invalid Configuration	Disable	Enable

In single sensor configurations, the sensor must be connected to the SENSOR 1 plug (LGWP1). Configurations other than the ones shown in TABLE 12 will cause a servicing fault.

Each DIP switch corresponds to a sensor position (i.e., DIP switch 1 to sensor 1; DIP switch 2 to sensor 2). The default factory switch positions are set to ENABLED.

The furnace control board software reads the ENABLE position as an active sensor. A sensor should be present for the corresponding sensor connector. Setting the DIP switch to DISABLE disables the sensor position.

SECONDARY SENSOR REQUIREMENTS

Additional Line Sets

If additional refrigerant line joints are present outside of the line set sleeve and a secondary refrigerant detection sensor is required, its installation must comply with the requirements listed in Refrigerant Detection Sensor Kit (27V53). See FIGURE 36 for routing the secondary sensor cable through the furnace cabinet.

Non-Low GWP Applications

⚠ WARNING

For Furnace only applications or Furnace replacement in a Non-Low GWP applications, the LOW GWP sensors should be disabled, otherwise the blower will operate continuously. To do this, the Low GWP Dip switches setting for both – Sensor 1 and the Sensor 2 must be moved to the DISABLE position.

FURNACE CONTROL BOARD LOW GWP MODES OF OPERATION

The modes of operation for the furnace control board are Initializing, Normal, Leak Detected, and Fault.

Initializing

The furnace control board is establishing connection with the refrigerant detection sensor and is completing an initial five-minute purge sequence.

Normal

The HVAC system is functioning normally. The furnace control board has not detected a refrigerant leak.

Leak Detected

When the furnace control board detects a refrigerant leak:

1. The furnace control board shuts off the (R) input (24VAC power) to the thermostat, which de-energizes the outdoor unit compressor and heat sources, such as gas and/or electric strip heat. No heating or cooling demands will be met.
2. The furnace control board activates the blower (high speed). The blower purges refrigerant from the cabinet, plenum, and ductwork.
3. After the furnace control board determines the refrigerant levels are below the safety threshold, the blower will continue to operate for the remainder of the seven (7) -minute cycle.
4. After the blower sequence is complete, the HVAC system resumes normal operation.

NOTE - *The HVAC system may not maintain a cooling or heating setpoint if a significant leak exists. Any refrigerant leaks that remain unaddressed for an extended time may cause the HVAC system to shut down on a low refrigerant pressure limit condition.*

Fault

When a Low GWP fault is detected by the furnace control board, the indoor unit blower engages and remains engaged at a constant air flow output until the fault is cleared.

NOTE - *See IGNITION CONTROL DIAGNOSTIC CODES on page 28 for Low GWP diagnostic error codes.*

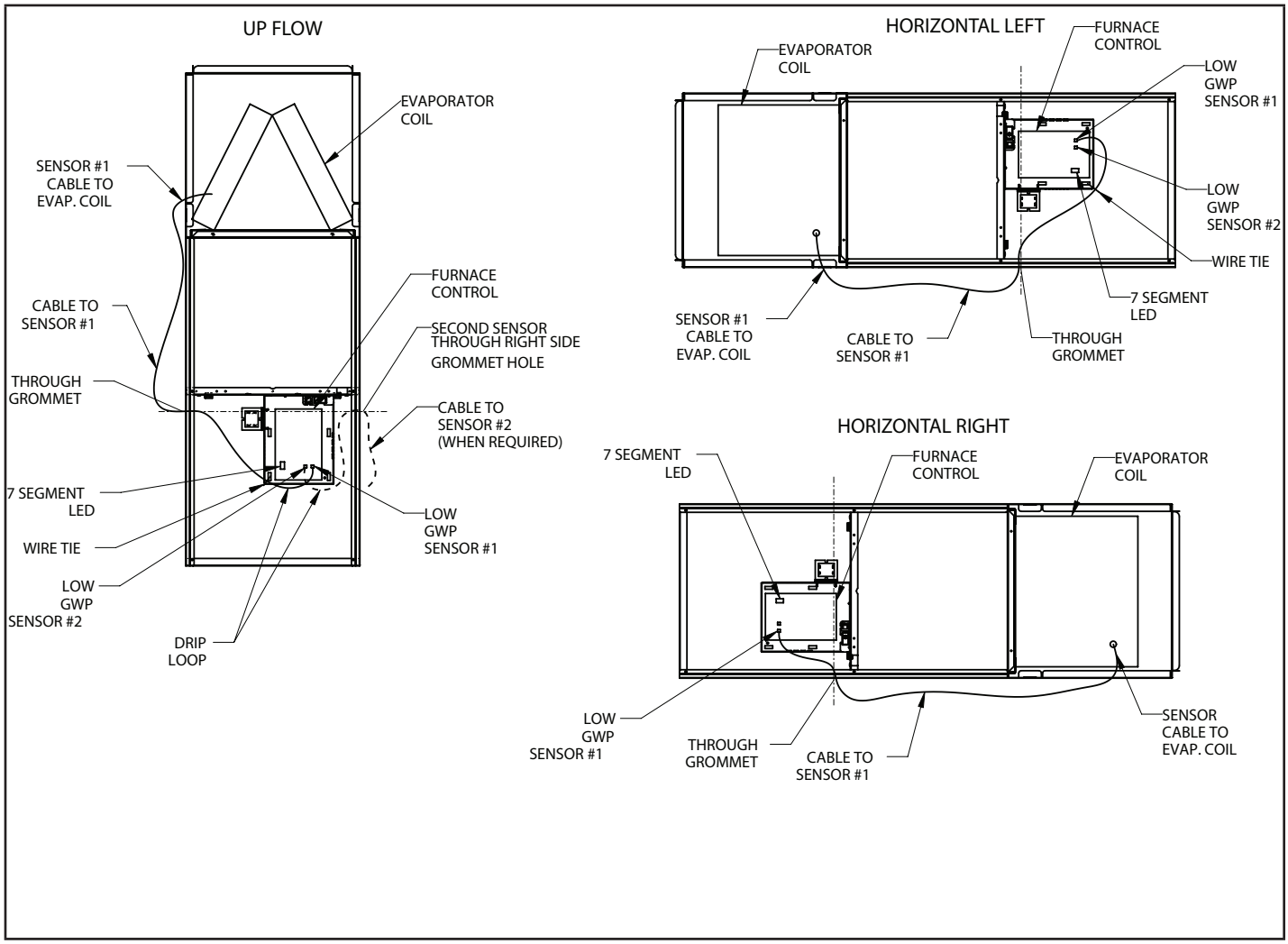

FIGURE 36

LGWP TEST BUTTON FUNCTIONALITY

The furnace control board is equipped with a Test/Reset push button. The Test button can be used to perform several functions, depending on the mode of operation of the furnace control board.

TABLE 13 lists the functions of the Test button during each mode of operation.

TABLE 13

LGWP Test Button Function

Mode of Operation	Press the Test Button to:
Normal	Trigger a leak detection response. Verify all equipment is wired correctly into the furnace blower control board (after installation).
Leak Detected	Reset the furnace control board to a normal mode of operation after a previous leak has been detected and purged from the HVAC system
Fault	Reset the furnace control board after troubleshooting and resolving a fault condition. If the fault is not resolved, the furnace control board will enter the Fault mode again.

LGWP Test Button - Additional Functions

TABLE 14 lists the additional functions of the Test Button while the furnace control board is functioning within the states of Initializing, Monitoring, Leak Detection, Servicing and Fault.

TABLE 14

Additional Button Functions

State	Press	Action
Initializing	Short	Skips remaining pre-purge after sensors are recognized by the furnace control board
Initializing	Long	Reset control
Monitoring	Short	Clear purge-counter if prior mitigation has occurred; Test mitigation
Monitoring	Long	Reset control
Mitigating	Short	If testing mitigation, end test
Servicing	Short	Reevaluate fault condition - if cleared return to monitoring, otherwise update indicator
Servicing	Long	Reset control
Fault	Short	Reevaluate fault condition - if cleared return to monitoring, otherwise update indicator
Fault	Long	Reset control

External Alarm

(*For applications with external alarms wired directly to the furnace control board*)

The furnace control board triggers the external alarm system when it enters Leak Detected mode. For alarm notifications, the furnace control board provides a dry relay contact that is rated 3A at 30 VAC/DC.

THERMOSTAT COMPATIBILITY

Thermostats that preserve memory settings are compatible with the furnace control board. Examples include:

- Battery-powered thermostats
- Analog Thermostat
- Late-model programmable thermostats

NOTE - *Early-generation digital and programmable thermostats may not retain the operation mode and temperature setpoints after a power outage.*

The following scenarios are likely to occur when home occupants are not available to adjust the thermostat setpoints as the system is recovering from leak detection and resuming normal operation:

- Heating could be lost during a cold night
- Cooling could be lost during a hot day
- The thermostat could reset to an incorrect temperature setpoint

START UP PROCEDURE

The furnace control board is equipped with a LGWP Test/Reset button, see Test Button Functionality. After the furnace control board has been mounted and wired, restore power to the HVAC system. The system will then run through a purge sequence for five minutes. After the purge sequence is complete, proceed to testing cooling demand and heating demand.

Cooling Demand

1. Prompt a cooling demand at the thermostat.
2. Press the LGWP Test button on the furnace control board.

   The system then executes a leak detection response.
3. Observe the following sequence:
   a. The LED indicator for leak detection. See IGNITION CONTROL DIAGNOSTIC CODES on page 28.
   b. The blower powers up.
   c. The outdoor compressor powers down.
4. Press the LGWP Test button to terminate the simulated Leak Detected mode upon test completion
5. ***Heating Demand***

1. Prompt a heating demand at the thermostat.
2. Observe the following sequence:
   a. The LED indicator for leak detection. See IGNITION CONTROL DIAGNOSTIC CODES on page 28.
   b. The blower powers up.
   c. The gas burners power down.
   d. The outdoor compressor powers down.
3. Press the LGWP Test button to terminate the simulated Leak Detected mode upon test completion.

The installation of the furnace control board is complete after both sequences are successfully completed.

Unit Start-Up

FOR YOUR SAFETY READ BEFORE LIGHTING

⚠ WARNING

Do not use this furnace if any part has been underwater. A flood-damaged furnace is extremely dangerous. Attempts to use the furnace can result in fire or explosion. Immediately call a qualified service technician to inspect the furnace and to replace all gas controls, control system parts, and electrical parts that have been wet or to replace the furnace, if deemed necessary.

⚠ WARNING

If overheating occurs or if gas supply fails to shut off, shut off the manual gas valve to the appliance before shutting off electrical supply..

⚠ CAUTION

Before attempting to perform any service or maintenance, turn the electrical power to unit OFF at disconnect switch..

BEFORE LIGHTING smell all around the appliance area for gas. Be sure to smell next to the floor because some gas is heavier than air and will settle on the floor.

The gas valve on the ML180UHE(K) unit is equipped with a gas control switch. Use only your hand to move the switch. Never use tools. If the switch will not turn or if the control switch will not move by hand, do not try to repair it.

Placing the furnace into operation:

ML180UHE(K) units are equipped with an automatic ignition system. Do not attempt to manually light burners on these furnaces. Each time the thermostat calls for heat, the burners will automatically light. The ignitor does not get hot when there is no call for heat on units with an automatic ignition system.

⚠ WARNING

If you do not follow these instructions exactly, a fire or explosion may result causing property damage, personal injury or death..

Gas Valve Operation (FIGURE 37 and FIGURE 38)

1 - **STOP!** Read the safety information at the beginning of this section.
2 - Set the thermostat to the lowest setting.
3 - Turn off all electrical power to the unit.
4 - This furnace is equipped with an ignition device which automatically lights the burners. Do not try to light the burners by hand.
5 - Remove the upper access panel.
6 - Move switch on gas valve to **OFF.** Do not force. See FIGURE 37 and FIGURE 38.
7 - Wait five minutes to clear out any gas. If you thensmell gas, **STOP!** Immediately call your gas supplier from a neighbor's phone. Follow the gas supplier's instructions. If you do not smell gas go to next step.

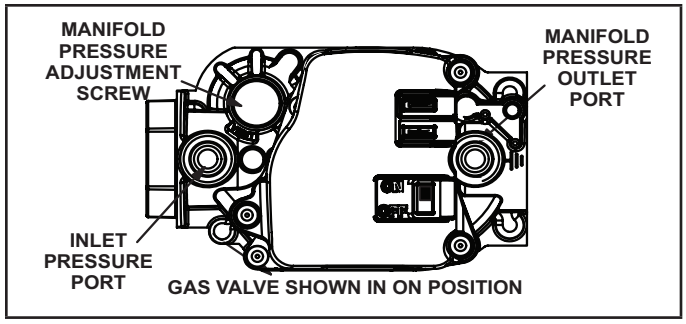

FIGURE 37

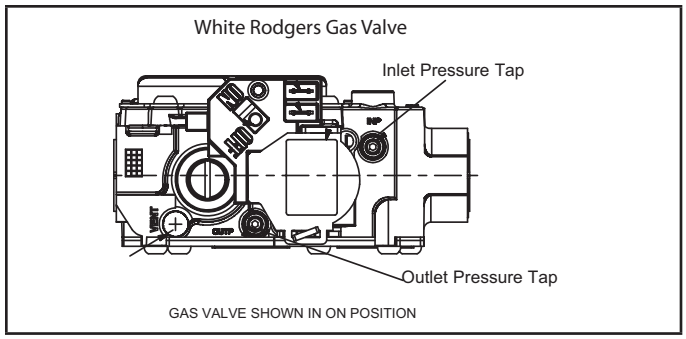

FIGURE 38

8 - Move switch on gas valve to ON. Do not force. See FIGURE 37 and FIGURE 38.
9 - Replace the upper access panel.
10- Turn on all electrical power to to the unit.
11- Set the thermostat to desired setting.

NOTE - *When unit is initially started, steps 1 through 11 may need to be repeated to purge air from gas line.*

12- If the appliance will not operate, follow the instructions "Turning Off Gas to Unit" and call your service technician or gas supplier.

Turning Off Gas to Unit

1 - Set the thermostat to the lowest setting.
2 - Turn off all electrical power to the unit if service is to be performed.
3 - Remove the upper access panel.
4 - Move switch on gas valve to OFF. Do not force.
5 - Replace the upper access panel.

Failure To Operate

If the unit fails to operate, check the following:

1 - Is the thermostat calling for heat?
2 - Are access panels securely in place?
3 - Is the main disconnect switch closed?
4 - Is there a blown fuse or tripped circuit breaker?
5 - Is the filter dirty or plugged? Dirty or plugged filters will cause the limit control to shut the unit off.
6 - Is gas turned on at the meter?
7 - Is the manual main shut-off valve open?
8 - Is the internal manual shut-off valve open?
9 - Is the unit ignition system in lock out? If the unit locks out again, call the service technician to inspect the unit for blockages.
10 - Is pressure switch closed? Obstructed flue will cause unit to shut off at pressure switch. Check flue and outlet for blockages

11 - Are flame rollout switches tripped? If flame rollout switches are tripped, call the service technician for inspection.

Heating Sequence Of Operation (follow steps below)

1 - When thermostat calls for heat, combustion air blower starts.

2 - Combustion air pressure switch proves blower operation. Switch is factory-set and requires no adjustment.

3 - After a 15-second prepurge, the hot surface ignitor energizes.

4 - After a 20-second ignitor warm-up period, the gas valve solenoid opens. A 4-second trial for ignition period begins.

5 - Gas is ignited, flame sensor proves the flame, and the combustion process continues.

6 - If flame is not detected after first ignition trial, the ignition control will repeat steps 3 and 4 four more times before locking out the gas valve (“WATCHGUARD” flame failure mode). The ignition control will then automatically repeat steps 1 through 6 after 60 minutes.

7 - To interrupt the 60-minute “WATCHGUARD” period, move thermostat from “Heat” to “OFF” then back to “Heat.” Heating sequence then restarts at step 1.

Gas Pressure Adjustment

Gas Flow (Approximate)

TABLE 15

GAS METER CLOCKING CHART				
ML180UHE(K) Unit	Seconds For One Revolution			
	Natural		LP/Propane	
	1 cu ft Dial	2 cu ft Dial	1 cu ft Dial	2 cu ft Dial
-045	80	160	200	400
-070	55	110	136	272
-090	41	82	102	204
-110	33	66	82	164
-135	27	54	68	136
Natural-1000 btu/cu ft LP-2500 btu/cu ft				

Furnace should operate at least 5 minutes before checking gas flow. Determine time in seconds for two revolutions of gas through the meter. (Two revolutions assures a more accurate time.) Divide by two and compare to time in TABLE 15. If manifold pressure matches TABLE 17 and rate is incorrect, check gas orifices for proper size and restriction. Remove temporary gas meter if installed.

NOTE - *To obtain accurate reading, shut off all other gas appliances connected to meter.*

Supply Pressure Measurement

A threaded plug on the inlet side of the gas valve provides access to the supply pressure tap. Remove the threaded plug, install a field-provided barbed fitting and connect a manometer to measure supply pressure. See TABLE 17 for proper line pressure. Replace the threaded plug after measurements have been taken.

Manifold Pressure Measurement

1 - Remove the threaded plug from the outlet side of the gas valve and install a field-provided barbed fitting. Connect to a manometer to measure manifold pressure.

2 - Start unit and allow 5 minutes for unit to reach steady state.

3 - While waiting for the unit to stabilize, observe the flame. Flame should be stable and should not lift from burner. Natural gas should burn blue.

4 - After allowing unit to stabilize for 5 minutes, record manifold pressure and compare to value given in TABLE 17.

NOTE - *Shut unit off and remove manometer as soon as an accurate reading has been obtained. Take care to remove barbed fitting and replace threaded plug.*

Proper Combustion

Furnace should operate a minimum 15 minutes with correct manifold pressure and gas flow rate before checking combustion. Take combustion sample beyond the flue outlet and compare to the table below. **The maximum carbon monoxide reading should not exceed 100 ppm.**

TABLE 16

ML180UHE(K) Unit	CO_2% Nat	CO_2% LP
-045	7.2 - 7.8	7.5 - 9.0
-070		
-090		
-110		
-135		

High Altitude

The manifold pressure may require adjustment and combustion air pressure switch may need replacing to ensure proper combustion at higher altitudes. Refer to TABLE 17 for manifold pressure and TABLE 18 for pressure switch change and gas conversion kits.

⚠ IMPORTANT

For safety, shut unit off and remove manometer as soon as an accurate reading has been obtained. Take care to replace pressure tap plug.

TABLE 17

Manifold Pressure Settings at all Altitudes

Model Input Size	Gas	0 - 2000 ft.	2001 -4500 ft .	4501 - 7500 ft.	7501 - 10,000 ft	Line Pressure in. wg.	
						Min	Max
045	Nat	3.5	3.2	3.0	3.5	4.5	13.0
	LP/Propane	10.0	10.0	10.0	10.0	11.0	13.0
070	Nat	3.5	3.2	2.8	3.5	4.5	13.0
	LP/Propane	10.0	10.0	10.0	10.0	11.0	13.0
090	Nat	3.5	3.2	2.7	3.5	4.5	13.0
	LP/Propane	10.0	10.0	9.6	10.0	11.0	13.0
110	Nat	3.5	3.5	3.0	3.5	4.5	13.0
	LP/Propane	10.0	10.0	9.6	10.0	11.0	13.0
135	Nat	3.5	3.5	2.9	3.5	4.5	13.0
	LP/Propane	10.0	10.0	9.6	10.0	11.0	13.0

TABLE 18

Pressure Switch and Gas Conversion Kits at all Altitudes

Model Input Size	High Altitude Pressure Switch Kit			High Altitude Natuarl Gas Orifice Kit	LP/Propane Oricifice Kit		Natuarl Gas Orifice Kit
045	0-4500 ft	4501-7500 ft	7501-10,000 ft	7501-10,000 ft	0-7500 ft	7501-10,000 ft	0-7500 ft
070	No Change	80W52	80W51	73W37	11K49	11K44	73W81
110		80W52	80W51				
090		80W52	80W51				
110		80W57	80W52				
135		80W52	80W51				

NOTE - A natural to L.P. propane gas changeover kit is necessary to convert this unit. Refer to the changeover kit installation instruction for the conversion procedure.

Other Unit Adjustments

Primary and Secondary Limits

The primary limit is located on the heating compartment vestibule panel. The secondary limits (if equipped) are located in the blower compartment, attached to the back side of the blower. These auto reset limits are factory-set and require no adjustment.

Flame Rollout Switches

These manually reset switches are located on the burner box.

Pressure Switch

The pressure switch is located in the heating compartment adjacent to the combustion air inducer. The switch checks for proper combustion air inducer operation before allowing ignition trial. The switch is factory-set and requires no adjustment.

Temperature Rise

After the furnace has been started, and supply and return air temperatures have been allowed to stabilize, check the temperature rise. If necessary, adjust the blower speed to maintain the temperature rise within the range shown on the unit nameplate. See TABLE 10 for allowable heating speeds

Increase the blower speed to decrease the temperature. Decrease the blower speed to increase the temperature rise. Failure to adjust the temperature rise may cause erratic limit operation.

Flame Sensor

Flame (microamp) signal is an electrical current which passes from the integrated control to the sensor during unit operation. Current passes from the sensor through the flame to ground to complete a safety circuit.

TABLE 19

Flame Signal in Microamps		
Normal	Low	Drop Out
1.5 or greater	0.5 - 1.4	0.4 or less

Constant Torque Motor

ML180UHE(K) units are equipped with a constant torque ECM motor. It has a DC motor coupled to an electronic control module both contained in the same motor housing. The motor is programmed to provide constant torque at each of the five selectable speeds. The motor has five speed taps. Each tap requires 24 volts to energize.

Input Voltage Requirements

The circuit is designed to be operated with AC voltage. A voltage of 12 to 33VAC is required to energize the motor. Expected current draw will be less than 20mA.

Blower Speeds

Follow the steps below to change the blower speeds.

1 - Turn off electrical power to furnace.

2 - Remove blower access panel.

3 - Disconnect existing speed tap at integrated control speed terminal.

NOTE - *Termination of any unused motor leads must be insulated.*

4 - Place unused blower speed tap on integrated control "PARK" terminal or insulate.

5- Refer to blower speed selection chart on unit wiringdiagram for desired heating or cooling speed. See Product Specifications manual for blower performance data See TABLE 10 for allowable heating speeds.

6 - Connect selected speed tap at integrated control speed terminal.

7 - Resecure blower access panel.

8 - Turn on electrical power to furnace.

9 - Recheck temperature rise.

Electronic Ignition

The integrated control has an added feature of an internal Watchguard control. The feature serves as an automatic reset device for integrated control lockout caused by ignition failure. This type of lockout is usually due to low gas line pressure. After one hour of continuous thermostat demand for heat, the Watchguard will re-set and remake thermostat demand to the furnace and automatically reset the integrated control to begin the ignition sequence

Service

⚠ WARNING

ELECTRICAL SHOCK, FIRE, OR EXPLOSION HAZARD.

Failure to follow safety warnings exactly could result in dangerous operation, serious injury, death or property damage.

Improper servicing could result in dangerous operation, serious injury, death, or property damage. Before servicing, disconnect all electrical power to furnace.

When servicing controls, label all wires prior to disconnecting.

Take care to reconnect wires correctly.

Verify proper operation after servicing.

Annual Furnace Maintenance

At the beginning of each heating season, and to comply with the **Lennox Limited Warranty**, your system should be checked by a licensed professional technician (or equivalent) as follows:

1 - Check wiring for loose connections, voltage at indoor unit and amperage of indoor motor.

2 - Check the condition of the belt and shaft bearings if applicable.

3 - Inspect all gas pipe and connections for leaks.

4 - Check the cleanliness of filters and change if necessary (monthly).

5 - Check the condition and cleanliness of burners and heat exchanger and clean if necessary.

6 - Inspect the Low GWP sensor / sensors and rubber sleeve.

7- Check the cleanliness of blower assembly and clean the housing, blower wheel and blower motor if necessary The blower motors are prelubricated for extended bearing life. No further lubrication is needed.

8- Inspect the combustion air inducer and clean if necessary.

9- Evaluate the heat exchanger integrity by inspecting the heat exchanger per the AHRI heat exchanger inspection procedure. This procedure can be viewed at www.ahrinet.org

10- Ensure sufficient combustion air is available to the furnace. Fresh air grilles and louvers (on the unit and in the room where the furnace is installed) must be properly sized, open and unobstructed to provide combustion air.

11- Inspect the furnace venting system to make sure it is in place, structurally sound, and without holes, corrosion, or blockage. Vent system must be free and clear of obstructions and must slope upward away from the furnace . Vent system should be installed per the National Fuel Gas Code

12- Inspect the furnace return air duct connection to ensure the duct is sealed to the furnace. Check for air leaks onsupply and return ducts and seal where necessary.

13- Check the condition of the furnace cabinet insulation and repair if necessary.

14- Perform a complete combustion analysis during the furnace inspection to ensure proper combustion and operation. Consult Service Literature for proper combustion values.

15- Verify operation of CO detectors and replace batteries as required.

Perform a general system test. Turn on the furnace to check operating functions such as the start-up and shut-off operation.

1 - Check the operation of the ignition system, inspect and clean flame sensor. Check microamps before and after. Check controls and safety devices (gas valve, flame sensor, temperature limits). Consult Service Manual for proper operating range. Thermal Limits should be checked by restricting airflow and not disconnecting the indoor blower. For additional details, please see Service and Application Note H049.

2 - Verify that system total static pressure and airflow settings are within specific operating parameters.

3 - Clock gas meter to ensure that the unit is operating at the specified firing rate. Check the supply pressure and the manifold pressure. On two-stage gas furnaces check the manifold pressure on high fire and low fire. If manifold pressure adjustment is necessary, consult the Service Literature for unit specific information on adjusting gas pressure. Not all gas valves are adjustable. Verify correct temperature rise.

Blower

Check the blower wheel for debris and clean if necessary. The blower motors are prelubricated for extended bearing life. No further lubrication is needed.

⚠ WARNING

The blower door must be securely in place when the blower and burners are operating. Gas fumes, which could contain carbon monoxide, can be drawn into the living space resulting in personal injury or death.

Cleaning the Burners

NOTE - *Use papers or protective covering in front of the furnace during cleaning.*

1 - Turn off both electrical and gas power supplies to furnace.

2 - Label the wires from gas valve, rollout switches, primary limit switch and make-up box then disconnect them.

3 - Disconnect gas supply piping. Remove the screw securing the burner box cover and remove cover. Remove the four screws securing the burner manifold assembly to the vestibule panel and remove the assembly from the unit.

4 - To clean burners, run a vacuum cleaner with a soft brush attachment over the face of burners. Visually inspect inside the burners and crossovers for any blockage caused by foreign matter. Remove any blockage. FIGURE 39 shows burner detail.

5 - Reinstall burner box, manifold assembly and burner box cover.

6 - Re-install gas supply and turn on electrical pwer to furnace.

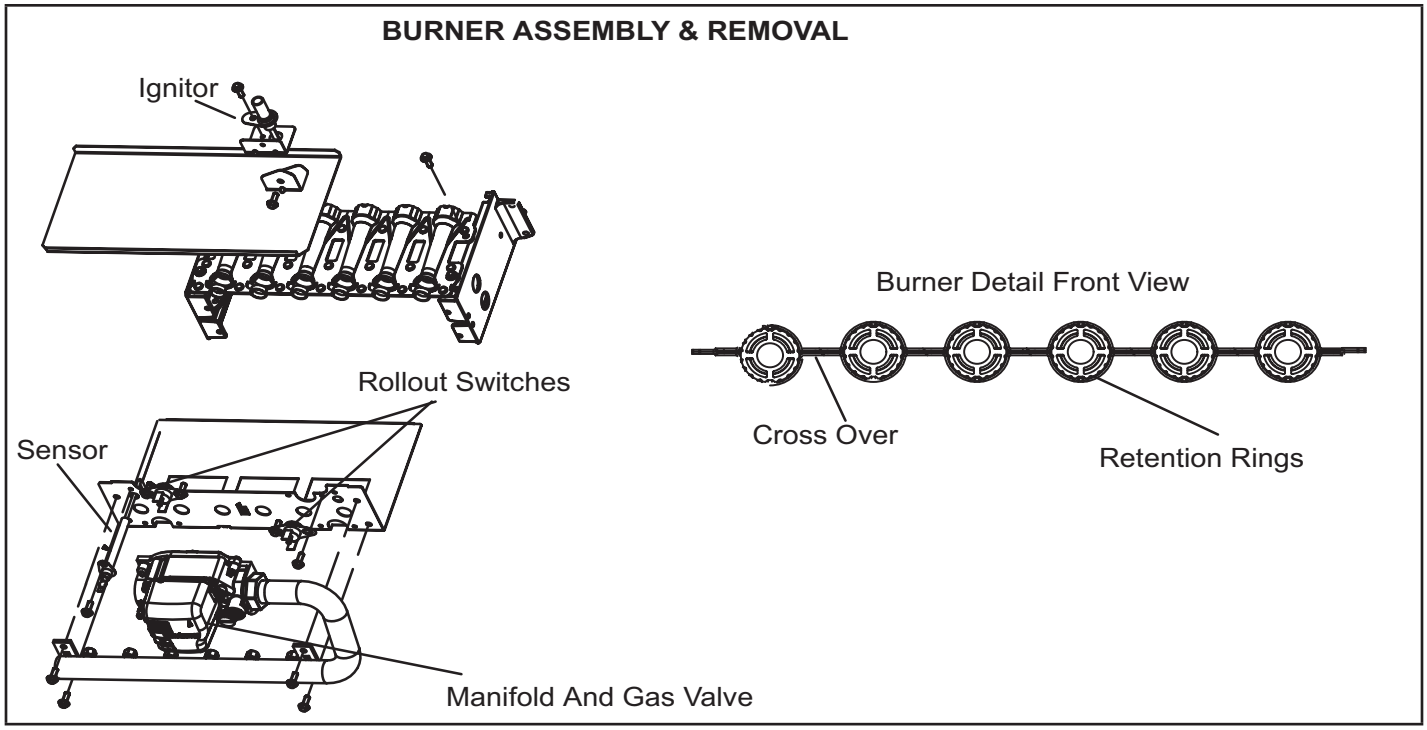

FIGURE 39

Repair Parts List

The following repair parts are available through independent Lennox dealers. When ordering parts, include the complete furnace model number listed on the CSA International nameplate -- Example: ML180UH045E36AK-01. **All service must be performed by a licensed professional installer (or equivalent), service agency, or gas supplier.**

Cabinet Parts

- Upper access panel
- Blower panel
- Top cap

Control Panel Parts

- Transformer
- Integrated control
- Door interlock switch
- Circuit breaker

Blower Parts

- Blower wheel
- Blower housing
- Motor
- Motor mounting frame
- Motor power choke
- Blower housing cutoff plate

Heating Parts

- Flame sensor
- Heat exchanger assembly
- Gas manifold
- Combustion air inducer
- Gas valve
- Main burner cluster
- Main burner orifices
- Pressure switch
- Ignitor
- Primary limit control
- Flame rollout switch (s)
- Secondary limit

Refrigerant Detection System Parts

- Refrigerant Detection Sensor
- Refrigerant Line Set Sleeve

UNIT SET UP
(typical)

Unit Model Number_____

Serial Number_____

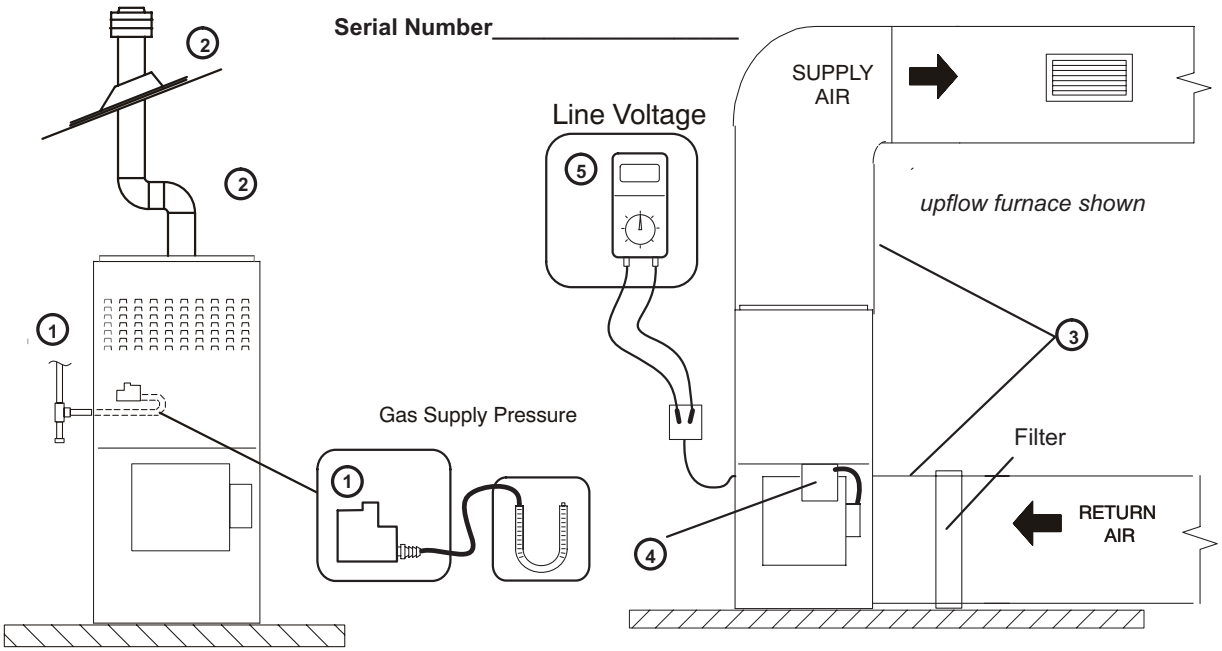

1 GAS SUPPLY

- ☐ Natural Gas ☐ LP/Propane Gas
- ☐ Piping Connections Tight
- ☐ Leak Tested
- ☐ Supply Line Pressure " W.C._____

2 VENT / EXHAUST PIPE

- ☐ Secure to Unit
- ☐ Elbows Secured to Pipe
- ☐ Roof Flashing (water tight)
- ☐ Vent Pipe Supported

3 DUCT SYSTEM

SUPPLY AIR DUCT

- ☐ Sealed
- ☐ Insulated (if necessary)
- ☐ Registers Open and Unobstructed

RETURN DUCT

- ☐ Sealed
- ☐ Filter Installed and Clean
- ☐ Grilles Unobstructed

4 INTEGRATED CONTROL

- ☐ DIP Switches Set (if applicable)
- ☐ Appropriate Links in Place (if applicable)

5 VOLTAGE CHECK

Supply Voltage _____

- ☐ Electrical Connections Tight

FIGURE 40

UNIT OPERATION
(typical)

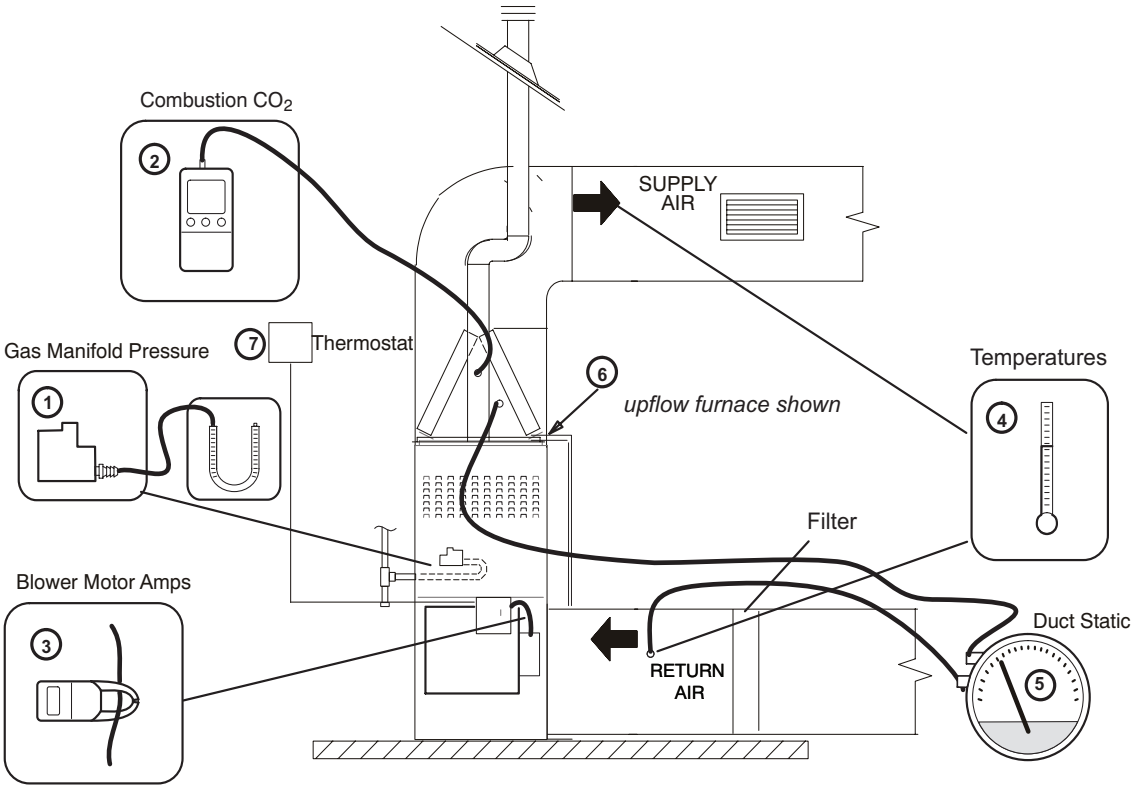

HEATING MODE

1 **GAS MANIFOLD PRESSURE "W.C._____**

2 **COMBUSTION SAMPLE CO_2%_____CO PPM_____**

3 **INDOOR BLOWER AMPS_____**

4 **TEMPERATURE RISE**

Supply Duct Temperature _____
Return Duct Temperature – _____
Temperature Rise = _____

5 **TOTAL EXTERNAL STATIC (dry coil)**

Supply External Static _____
Return External Static + _____
Total External Static = _____

COOLING MODE

3 **INDOOR BLOWER AMPS_____**

4 **TEMPERATURE DROP**

Return Duct Temperature _____
Supply Duct Temperature – _____
Temperature Drop = _____

5 **TOTAL EXTERNAL STATIC (dry coil)**

Supply External Static _____
Return External Static + _____
Total External Static = _____

6 **DRAIN LINE**

☐ **Leak Free**

7 **THERMOSTAT**

☐ **Adjusted and Programmed**

☐ **Operation Explained to Owner**

Contractor's: Name_____Telephone_____Checklist Completed_____

Job Address_____-_____Technician's Name_____

FIGURE 41

BLOWER DATA

ML180UH045E36AK PERFORMANCE (Less Filter)

External Static Pressure in. w.g.	Air Volume / Watts at Various Blower Speeds									
	High (Black)		Medium-High (Brown)		Medium (Blue)		Medium-Low (Yellow)		Low (Red)	
	cfm	Watts	cfm	Watts	cfm	Watts	cfm	Watts	cfm	Watts
0.10	1383	239	1179	156	991	106	970	102	959	98
0.20	1346	251	1132	165	943	114	854	92	764	78
0.30	1308	263	1083	174	896	122	797	99	668	78
0.40	1268	272	1057	185	864	130	748	106	612	85
0.50	1257	286	1013	193	818	139	697	114	562	92
0.60	1211	297	985	203	775	147	651	121	508	98
0.70	1185	307	937	212	728	155	605	129	456	104
0.80	1140	318	902	221	688	163	554	136	385	111
0.90	1115	328	866	231	641	171	512	143	- - -	- - -
1.00	1074	335	823	241	598	178	446	151	- - -	- - -

ML180UH070E36AK PERFORMANCE (Less Filter)

External Static Pressure in. w.g.	Air Volume / Watts at Various Blower Speeds									
	High (Black)		Medium-High (Brown)		Medium (Blue)		Medium-Low (Yellow)		Low (Red)	
	cfm	Watts	cfm	Watts	cfm	Watts	cfm	Watts	cfm	Watts
0.10	1372	296	1160	188	1073	154	1040	144	880	96
0.20	1340	305	1125	197	1035	162	1002	151	836	103
0.30	1309	315	1092	205	999	170	965	159	794	110
0.40	1281	325	1059	213	964	178	929	166	752	116
0.50	1253	335	1026	221	927	185	891	173	709	122
0.60	1225	344	992	229	891	192	855	180	666	128
0.70	1196	353	958	237	854	199	818	187	622	134
0.80	1158	357	924	245	817	206	780	194	582	139
0.90	1122	363	890	252	781	213	742	200	544	144
1.00	1090	370	849	257	746	219	707	207	504	149

ML180UH070E36BK PERFORMANCE (Less Filter)

External Static Pressure in. w.g.	Air Volume / Watts at Various Blower Speeds									
	High (Black)		Medium-High (Brown)		Medium (Blue)		Medium-Low (Yellow)		Low (Red)	
	cfm	Watts	cfm	Watts	cfm	Watts	cfm	Watts	cfm	Watts
0.10	1493	267	1256	173	1166	145	1139	132	978	96
0.20	1433	277	1221	184	1116	155	1078	139	903	98
0.30	1395	288	1151	193	1067	163	1027	148	849	107
0.40	1353	296	1094	199	1008	171	975	155	786	113
0.50	1312	308	1047	209	951	179	923	164	726	120
0.60	1270	318	995	219	901	187	875	172	667	127
0.70	1232	328	943	228	856	194	824	181	604	134
0.80	1187	338	895	236	804	202	774	188	543	142
0.90	1144	348	858	244	754	209	720	196	492	147
1.00	1067	339	809	252	703	217	669	204	447	152

BLOWER DATA

ML180UH090E48BK PERFORMANCE (Less Filter)

External Static Pressure in. w.g.	Air Volume / Watts at Various Blower Speeds									
	High (Black)		Medium-High (Brown)		Medium (Blue)		Medium-Low (Yellow)		Low (Red)	
	cfm	Watts	cfm	Watts	cfm	Watts	cfm	Watts	cfm	Watts
0.10	1740	329	1528	233	1404	193	1348	173	1205	130
0.20	1697	344	1479	245	1360	203	1302	185	1147	140
0.30	1655	355	1437	260	1329	219	1262	194	1097	151
0.40	1624	373	1405	274	1268	225	1215	204	1043	161
0.50	1581	382	1376	287	1234	238	1175	216	996	171
0.60	1545	400	1319	299	1197	249	1119	227	944	182
0.70	1513	414	1277	308	1150	260	1069	238	889	190
0.80	1472	426	1246	321	1097	270	1025	251	845	199
0.90	1421	431	1197	333	1051	283	983	261	781	211
1.00	1296	404	1153	344	1010	292	935	270	723	221

ML180UH090E60CK PERFORMANCE (Less Filter)

External Static Pressure in. w.g.	Air Volume / Watts at Different Blower Speeds																			
	Bottom Return Air, Side Return Air from Both Sides or Return Air from Bottom and One Side.										**Single Side Return Air** − Air volumes in **bold** (over 1800 cfm) require Optional Return Air Base and field fabricated transition to accommodate 20 x 25 x 1 in. air filter in order to maintain proper air velocity.									
	High (Black)		Medium-High (Brown)		Medium (Blue)		Medium-Low (Yellow)		Low (Red)		High (Black)		Medium-High (Brown)		Medium (Blue)		Medium-Low (Yellow)		Low (Red)	
	cfm	Watts	cfm	Watts	cfm	Watts	cfm	Watts	cfm	Watts	cfm	Watts	cfm	Watts	cfm	Watts	cfm	Watts	cfm	Watts
0.10	2179	623	1917	435	1725	326	1565	256	1422	201	**2148**	**593**	**1889**	**403**	1707	305	1553	234	1404	185
0.20	2141	640	1874	450	1679	340	1515	268	1370	214	**2123**	**606**	**1823**	**406**	1679	317	1503	244	1377	196
0.30	2102	658	1831	464	1636	355	1468	282	1321	225	**2069**	**613**	**1814**	**422**	1638	327	1464	255	1328	207
0.40	2065	675	1790	480	1591	368	1420	294	1265	237	**2065**	**634**	1791	435	1593	337	1414	264	1268	216
0.50	2029	693	1749	495	1546	381	1371	306	1208	248	**2030**	**645**	1734	445	1548	348	1366	276	1224	228
0.60	1991	709	1708	510	1500	394	1320	317	1158	259	**2000**	**663**	1705	461	1503	360	1329	291	1156	235
0.70	1952	726	1667	524	1455	406	1271	328	1107	269	**1954**	**681**	1663	474	1461	374	1278	303	1106	245
0.80	1912	743	1623	538	1408	418	1224	341	1052	280	**1928**	**694**	1624	488	1411	385	1227	313	1045	257
0.90	1876	758	1582	552	1366	432	1176	353	1003	291	**1890**	**712**	1576	502	1361	397	1175	324	989	268
1.00	1842	779	1543	567	1320	443	1128	365	947	302	**1853**	**728**	1541	517	1315	412	1122	335	912	282

BLOWER DATA

ML180UH110E60CK PERFORMANCE (Less Filter)

External Static Pressure in. w.g.	Air Volume / Watts at Different Blower Speeds																			
	Bottom Return Air, Side Return Air with Return Air from Both Sides or Return Air from Bottom and One Side.										**Single Side Return Air** − Air volumes in **bold** (over 1800 cfm) require Optional Return Air Base and field fabricated transition to accommodate 20 x 25 x 1 in. air filter in order to maintain proper air velocity.									
	High (Black)		**Medium-High** (Brown)		**Medium** (Blue)		**Medium-Low** (Yellow)		**Low** (Red)		**High** (Black)		**Medium-High** (Brown)		**Medium** (Blue)		**Medium-Low** (Yellow)		**Low** (Red)	
	cfm	**Watts**	**cfm**	**Watts**	**cfm**	**Watts**	**cfm**	**Watts**	**cfm**	**Watts**	**cfm**	**Watts**	**cfm**	**Watts**	**cfm**	**Watts**	**cfm**	**Watts**	**cfm**	**Watts**
0.10	2147	601	1917	421	1697	300	1550	240	1367	175	**2160**	**623**	**1902**	**427**	1679	303	1538	244	1354	179
0.20	2129	622	1857	427	1632	308	1501	249	1309	184	**2117**	**642**	**1854**	**440**	1626	318	1486	252	1309	189
0.30	2087	632	1822	441	1594	320	1436	256	1263	193	**2066**	**653**	**1805**	**453**	1579	326	1445	265	1265	198
0.40	2065	652	1787	454	1542	329	1401	270	1203	203	**2038**	**670**	1764	467	1541	336	1400	276	1210	208
0.50	2013	661	1743	464	1498	339	1343	278	1150	214	**2004**	**686**	1740	481	1493	347	1360	290	1155	219
0.60	1995	683	1701	477	1452	356	1294	291	1088	224	**1965**	**698**	1697	494	1450	360	1307	299	1097	228
0.70	1942	691	1651	492	1409	369	1243	305	1039	235	**1936**	**717**	1648	505	1409	369	1260	310	1038	235
0.80	1913	710	1617	507	1358	380	1193	313	974	245	**1906**	**731**	1605	518	1353	381	1206	315	986	246
0.90	1877	726	1570	521	1304	392	1158	328	- - -	- - -	**1842**	**724**	1566	534	1324	395	1160	328	929	256
1.00	1797	719	1545	539	1263	403	1090	339	- - -	- - -	1742	696	1529	546	1264	403	1112	339	873	267

ML180UH135E60DK PERFORMANCE (Less Filter)

External Static Pressure in. w.g.	Air Volume / Watts at Different Blower Speeds																			
	Bottom Return Air, Side Return Air with Return Air from Both Sides or Return Air from Bottom and One Side.										**Single Side Return Air** − Air volumes in **bold** (over 1800 cfm) require Optional Return Air Base and field fabricated transition to accommodate 20 x 25 x 1 in. air filter in order to maintain proper air velocity.									
	High (Black)		**Medium-High** (Brown)		**Medium** (Blue)		**Medium-Low** (Yellow)		**Low** (Red)		**High** (Black)		**Medium-High** (Brown)		**Medium** (Blue)		**Medium-Low** (Yellow)		**Low** (Red)	
	cfm	**Watts**	**cfm**	**Watts**	**cfm**	**Watts**	**cfm**	**Watts**	**cfm**	**Watts**	**cfm**	**Watts**	**cfm**	**Watts**	**cfm**	**Watts**	**cfm**	**Watts**	**cfm**	**Watts**
0.10	2441	700	2249	547	2036	403	1826	305	1647	231	**2388**	**698**	**2205**	**546**	**2005**	**411**	1808	309	1604	231
0.20	2384	726	2200	576	1978	428	1739	319	1569	249	**2309**	**722**	**2145**	**565**	**1939**	**429**	1738	327	1535	248
0.30	2336	760	2137	595	1895	442	1662	340	1507	265	**2275**	**749**	**2091**	**594**	**1866**	**447**	1675	344	1461	263
0.40	2269	784	2069	621	1837	472	1585	360	1430	281	**2208**	**773**	**2049**	**619**	**1812**	**469**	1606	363	1396	281
0.50	2211	799	2021	651	1771	487	1517	376	1346	294	**2193**	**802**	**1987**	**640**	1745	487	1534	381	1324	297
0.60	2186	836	1966	671	1710	508	1437	391	1271	311	**2138**	**827**	**1945**	**669**	1676	507	1481	400	1262	314
0.70	2107	835	1881	682	1633	525	1429	415	1201	328	**2071**	**833**	**1884**	**687**	1630	529	1411	417	1192	329
0.80	1979	802	1826	706	1598	550	1355	432	1091	348	**1948**	**798**	**1835**	**710**	1604	560	1344	433	1117	345
0.90	1817	742	1735	700	1512	567	1224	448	1000	361	1775	740	1709	689	1519	569	1282	451	876	361
1.00	1576	644	1525	634	1401	569	1124	467	927	376	1535	639	1514	619	1426	574	1220	469	786	377