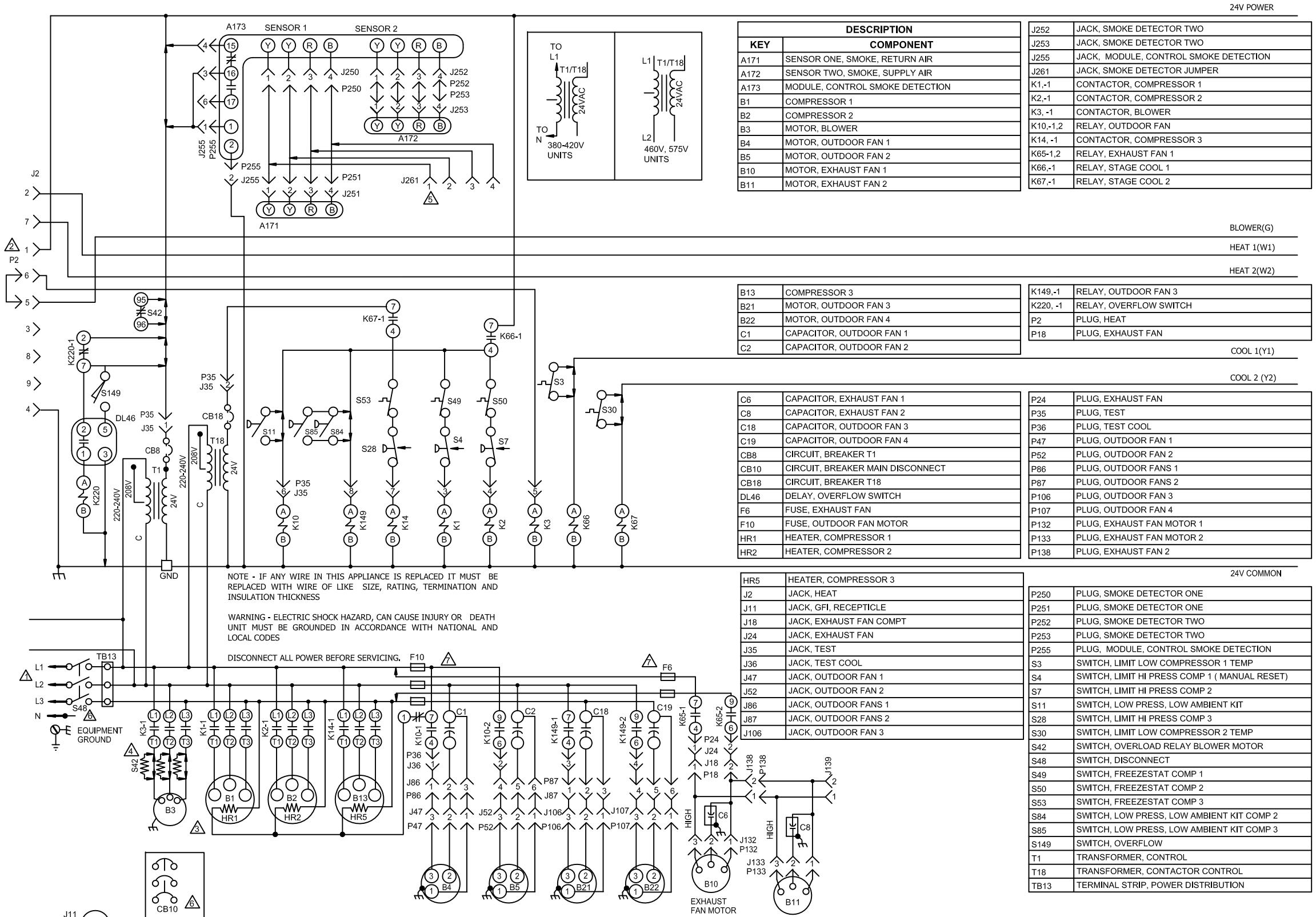

DESCRIPTION	
KEY	COMPONENT
A171	SENSOR ONE, SMOKE, RETURN AIR
A172	SENSOR TWO, SMOKE, SUPPLY AIR
A173	MODULE, CONTROL SMOKE DETECTION
B1	COMPRESSOR 1
B2	COMPRESSOR 2
B3	MOTOR, BLOWER
B4	MOTOR, OUTDOOR FAN 1
B5	MOTOR, OUTDOOR FAN 2
B10	MOTOR, EXHAUST FAN 1
B11	MOTOR, EXHAUST FAN 2
B13	COMPRESSOR 3
B21	MOTOR, OUTDOOR FAN 3
B22	MOTOR, OUTDOOR FAN 4
C1	CAPACITOR, OUTDOOR FAN 1
C2	CAPACITOR, OUTDOOR FAN 2
C6	CAPACITOR, EXHAUST FAN 1
C8	CAPACITOR, EXHAUST FAN 2
C18	CAPACITOR, OUTDOOR FAN 3
C19	CAPACITOR, OUTDOOR FAN 4
CB8	CIRCUIT, BREAKER T1
CB10	CIRCUIT, BREAKER MAIN DISCONNECT
CB18	CIRCUIT, BREAKER T18
DL46	DELAY, OVERFLOW SWITCH
F6	FUSE, EXHAUST FAN
F10	FUSE, OUTDOOR FAN MOTOR
HR1	HEATER, COMPRESSOR 1
HR2	HEATER, COMPRESSOR 2
HR5	HEATER, COMPRESSOR 3
J2	JACK, HEAT
J11	JACK, GFI, RECEPTICLE
J18	JACK, EXHAUST FAN COMPT
J24	JACK, EXHAUST FAN
J35	JACK, TEST
J36	JACK, TEST COOL
J47	JACK, OUTDOOR FAN 1
J52	JACK, OUTDOOR FAN 2
J86	JACK, OUTDOOR FANS 1
J87	JACK, OUTDOOR FANS 2
J106	JACK, OUTDOOR FAN 3
J107	JACK, OUTDOOR FAN 4
J132	JACK, BLOWER , EXHAUST FAN MOTOR 1
J133	JACK, BLOWER , EXHAUST FAN MOTOR 2
J138	JACK, EXHAUST FAN 2
J139	JACK, EXHAUST FAN 3
J250	JACK, SMOKE DETECTOR ONE
J251	JACK, SMOKE DETECTOR ONE
J252	JACK, SMOKE DETECTOR TWO
J253	JACK, SMOKE DETECTOR TWO
J255	JACK, MODULE, CONTROL SMOKE DETECTION
J261	JACK, SMOKE DETECTOR JUMPER
K1,-1	CONTACTOR, COMPRESSOR 1
K2,-1	CONTACTOR, COMPRESSOR 2
K3, -1	CONTACTOR, BLOWER
K10,-1,2	RELAY, OUTDOOR FAN
K14, -1	CONTACTOR, COMPRESSOR 3
K65-1,2	RELAY, EXHAUST FAN 1
K66,-1	RELAY, STAGE COOL 1
K67,-1	RELAY, STAGE COOL 2
K149,-1	RELAY, OUTDOOR FAN 3
K220, -1	RELAY, OVERFLOW SWITCH
P2	PLUG, HEAT
P18	PLUG, EXHAUST FAN
P24	PLUG, EXHAUST FAN
P35	PLUG, TEST
P36	PLUG, TEST COOL
P47	PLUG, OUTDOOR FAN 1
P52	PLUG, OUTDOOR FAN 2
P86	PLUG, OUTDOOR FANS 1
P87	PLUG, OUTDOOR FANS 2
P106	PLUG, OUTDOOR FAN 3
P107	PLUG, OUTDOOR FAN 4
P132	PLUG, EXHAUST FAN MOTOR 1
P133	PLUG, EXHAUST FAN MOTOR 2
P138	PLUG, EXHAUST FAN 2
P250	PLUG, SMOKE DETECTOR ONE
P251	PLUG, SMOKE DETECTOR ONE
P252	PLUG, SMOKE DETECTOR TWO
P253	PLUG, SMOKE DETECTOR TWO
P255	PLUG, MODULE, CONTROL SMOKE DETECTION
S3	SWITCH, LIMIT LOW COMPRESSOR 1 TEMP
S4	SWITCH, LIMIT HI PRESS COMP 1 (MANUAL RESET)
S7	SWITCH, LIMIT HI PRESS COMP 2
S11	SWITCH, LOW PRESS, LOW AMBIENT KIT
S28	SWITCH, LIMIT HI PRESS COMP 3
S30	SWITCH, LIMIT LOW COMPRESSOR 2 TEMP
S42	SWITCH, OVERLOAD RELAY BLOWER MOTOR
S48	SWITCH, DISCONNECT
S49	SWITCH, FREEZESTAT COMP 1
S50	SWITCH, FREEZESTAT COMP 2
S53	SWITCH, FREEZESTAT COMP 3
S84	SWITCH, LOW PRESS, LOW AMBIENT KIT COMP 2
S85	SWITCH, LOW PRESS, LOW AMBIENT KIT COMP 3
S149	SWITCH, OVERFLOW
T1	TRANSFORMER, CONTROL
T18	TRANSFORMER, CONTACTOR CONTROL
TB13	TERMINAL STRIP, POWER DISTRIBUTION

NOTE - IF ANY WIRE IN THIS APPLIANCE IS REPLACED IT MUST BE REPLACED WITH WIRE OF LIKE SIZE, RATING, TERMINATION AND INSULATION THICKNESS

WARNING - ELECTRIC SHOCK HAZARD, CAN CAUSE INJURY OR DEATH UNIT MUST BE GROUNDED IN ACCORDANCE WITH NATIONAL AND LOCAL CODES

DISCONNECT ALL POWER BEFORE SERVICING.

1. NOTE - FOR USE WITH COPPER CONDUCTORS ONLY REFER TO UNIT RATING PLATE FOR MINIMUM CIRCUIT AMPACITY AND MAXIMUM OVERCURRENT PROTECTION SIZE.
2. P2 IS USED ON KCA UNITS ONLY
3. IMPORTANT: TO PREVENT MOTOR BURNOUT, NEVER CONNECT MORE THAN ONE MOTOR LEAD TO ANY ONE CONNECTION. TAPE UNUSED MOTOR LEADS
4. S42 USED ON "M" VOLTAGE UNITS AND UNITS WITH 10 HP MOTORS
5. CONNECT A172 SENSOR TO J261 ON SUPPLY AIR SMOKE DETECTOR ONLY
6. S48 OR CB10 MAY BE USED
7. F6 AND F10 ARE USED ON "Y" VOLTAGE UNITS ONLY

DENOTES OPTIONAL COMPONENTS
LINE VOLTAGE FIELD INSTALLED

LANDMARK C-BOX WIRING DIAGRAM | 10/11

COOLING

KCA/KGA - 240S, 300S - G,J,M,Y

SECTION B | REV 0

Supersedes | New Form No. 537084-02

© 2011 Lennox Commercial