© 2026 Lennox Industries Inc.
Dallas, Texas USA

INSTALLATION INSTRUCTIONS ML193DFEK

MERIT® SERIES GAS FURNACE DOWNNFLOW AIR DISCHARGE

508567-01
05/2026

THIS MANUAL MUST BE LEFT WITH THE HOMEOWNER FOR FUTURE REFERENCE

⚠ This is a safety alert symbol and should never be ignored. When you see this symbol on labels or in manuals, be alert to the potential for personal injury or death.

⚠ CAUTION

As with any mechanical equipment, contact with sharp sheet metal edges can result in personal injury. Take care while handling this equipment and wear gloves and protective clothing.

⚠ WARNING

Improper installation, adjustment, alteration, service or maintenance can cause property damage, personal injury or loss of life. Installation and service must be performed by a licensed professional HVAC installer (or equivalent), service agency or the gas supplier.

⚠ WARNING

This furnace is equipped with an ignition control factory enabled for use with Lennox A2L refrigerant systems. Disabling the refrigerant detection functionality on A2L system is prohibited by safety codes. Refer to furnace installation instructions for non-A2L and non-Lennox refrigerant system setup.

Contents

Unit Dimensions - inches (mm) 2
ML193DFEK Gas Furnace 3
Shipping and Packing List 3
Safety 3
Use of Furnace as a Construction Heater 4
General 5
Combustion, Dilution, Ventilation Air 5
Setting Equipment 8
Filters 12
Duct System 12
Pipe Fittings Specifications 12
Joint Cementing Procedure 14
Venting Practices 15
Gas Piping 31
Electrical 33
Ignition Control 36
Twinning 43
Low GWP Application 44
Unit Start-Up 47
Gas Pressure Measurement 48
Proper Combustion 49
High Altitude 49
Testing Non Direct Appliances for Proper Air 50
Other Unit Adjustments 51
Service 52
Repair Parts List 53
Start Up Checklist 54
Blower Data 58

0526
508567-01

Unit Dimensions - inches (mm)

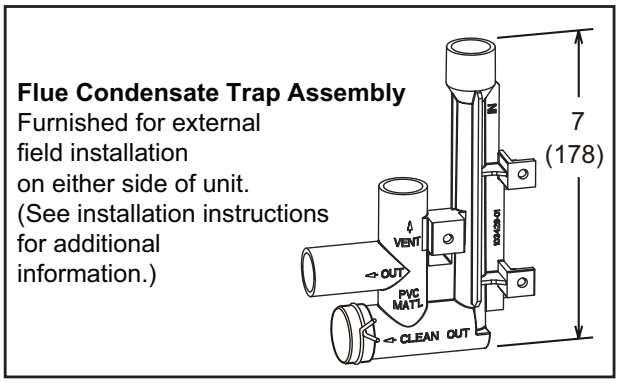

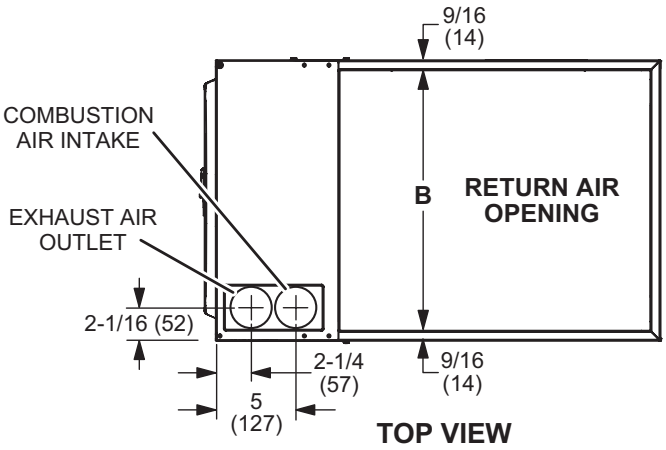

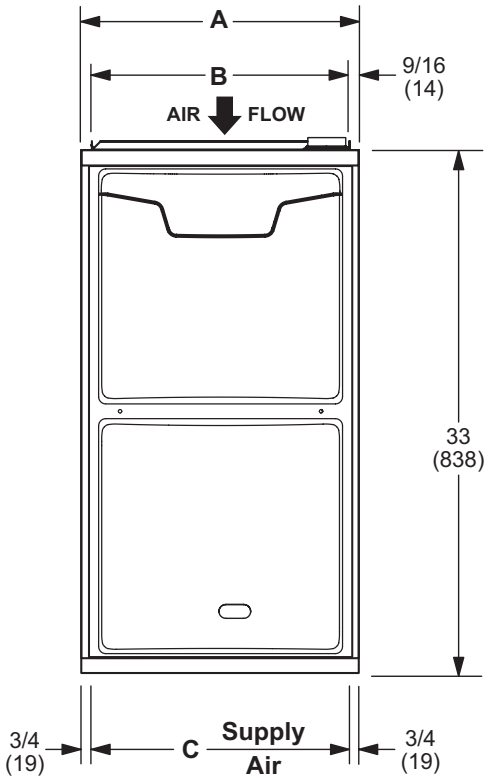

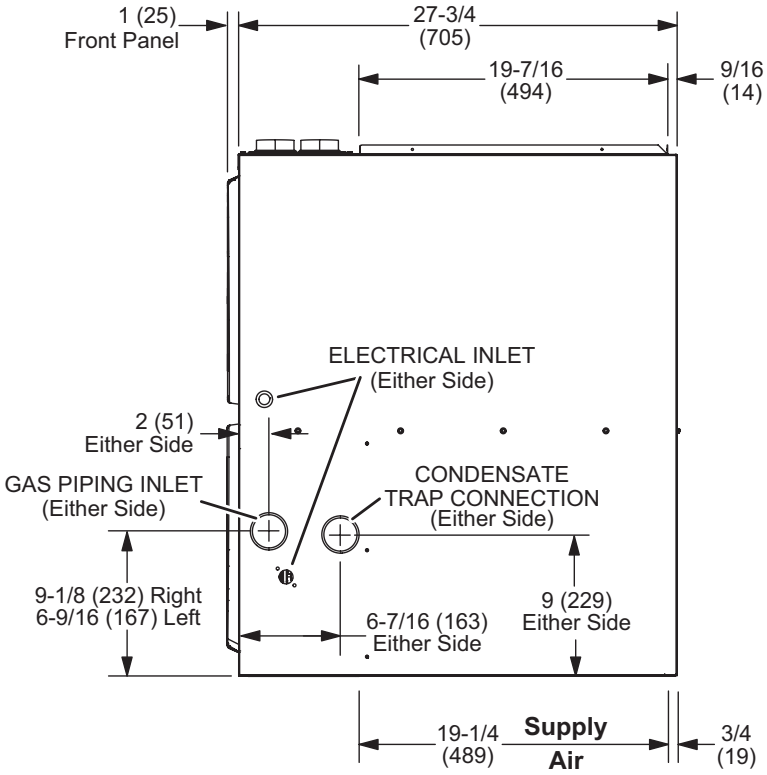

ML193DFEK Model No.	A in - mm	B in - mm	C in - mm
045XE36BK 070XE6BK	17-1/2 - 446	16-3/8 - 416	16 - 406
090XE48CK	21 - 533	19-7/8 - 505	19-1/2 - 495

ML193DFEK Gas Furnace

The ML193DFEK Category IV gas furnace is shipped ready for installation in the downflow position.

The furnace is equipped for installation in natural gas applications. A conversion kit (ordered separately) is required for use in propane/LP gas applications.

The ML193DFEK can be installed as a Direct Vent or Non- Direct Vent gas central furnace.

NOTE - *In Direct Vent installations, combustion air is taken from outdoors and flue gases are discharged outdoors. In Non-Direct Vent installations, combustion air is taken from indoors or ventilated attic or crawlspace and flue gases are discharged outdoors. See FIGURE 1 and FIGURE 2 for applications involving roof termination.*

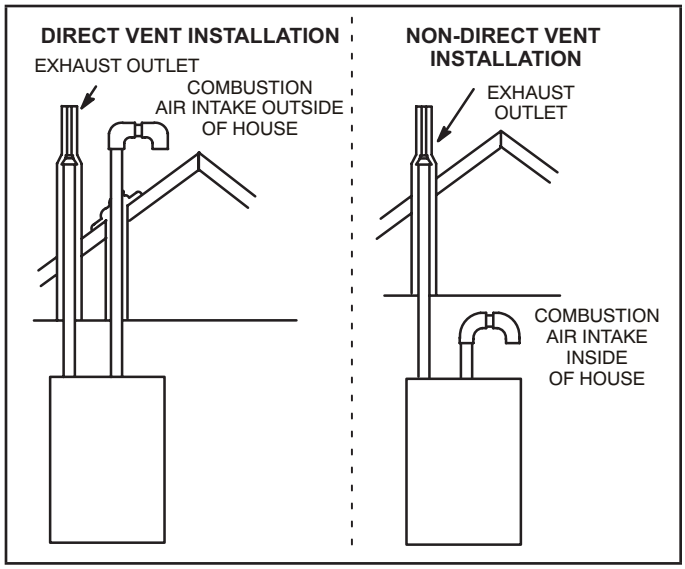

FIGURE 1

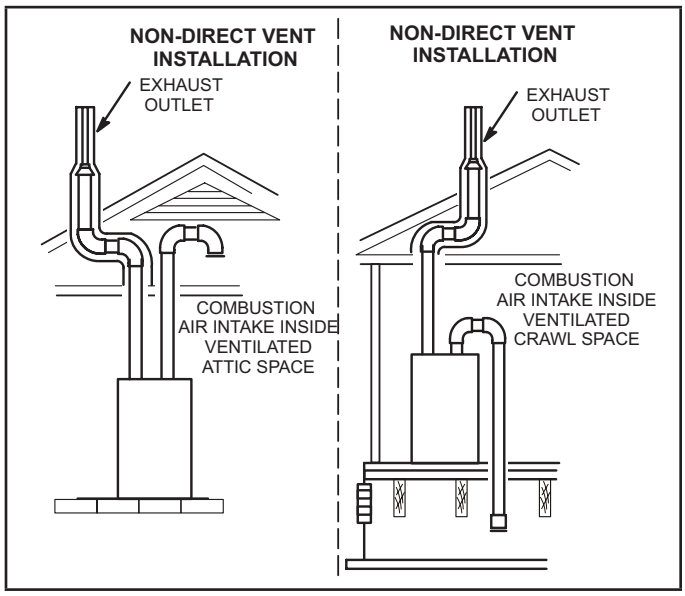

FIGURE 2

Shipping and Packing List

Package 1 of 1 contains

1 - Assembled ML193DFEK unit

1 - Bag assembly containing the following:

- 1 - Snap bushing
- 1 - Snap plug
- 1 - Wire tie
- 1 - Condensate trap
- 1 - Condensate trap cap
- 1 - Condensate trap clamp
- 1 - 2” diameter Air intake screen
- 1 - 3/4” Threaded street elbow

Check equipment for shipping damage. If you find any damage, immediately contact the last carrier.

The following items may also be ordered separately:

1 - Thermostat

1 - Propane/LP changeover kit

1 - Sensor Kit (field installed)

Safety Information

⚠ DANGER

Danger of explosion.

There are circumstances in which odorant used with LP/propane gas can lose its scent. In case of a leak, LP/propane gas will settle close to the floor and may be difficult to smell. An LP/propane leak detector should be installed in all LP applications.

⚠ WARNING

Improper installation, adjustment, alteration, service or maintenance can cause property damage, personal injury or loss of life. Installation and service must be performed by a licensed professional installer (or equivalent), service agency or the gas supplier.

⚠ CAUTION

As with any mechanical equipment, contact with sharp sheet metal edges can result in personal injury. Take care while handling this equipment and wear gloves and protective clothing.

Use only the type of gas approved for use with this furnace.

Refer to unit nameplate.

ML193DFEK units are CSA International certified to ANSI Z21.47 and CSA 2.3 standards.

Building Codes

In the USA, installation of gas furnaces must conform with local building codes. In the absence of local codes, units must be installed according to the current National Fuel Gas Code (ANSI-Z223.1/NFPA 54). The National Fuel Gas Code is available from the following address:

American National Standards Institute, Inc.

11 West 42nd Street

New York, NY 10036

In Canada, installation must conform with current National Standard of Canada CSA-B149 Natural Gas and Propane Installation Codes, local plumbing or waste water codes and other applicable local codes.

In order to ensure proper unit operation in non-direct vent applications, combustion and ventilation air supply must be provided according to the current National Fuel Gas Code or CSA-B149 standard.

Locations and Clearances

This furnace is CSA International certified for installation clearances to combustible material as listed on the unit nameplate and in the table in figure 13. Accessibility and service clearances must take precedence over fire protection clearances.

For installation in a residential garage, the furnace must be installed so that the burner(s) and the ignition source are located no less than 18 inches (457 mm) above the floor. The furnace must be located or protected to avoid physical damage by vehicles. When a furnace is installed in a public garage, hangar, or other building that has a hazardous atmosphere, the furnace must be installed according to recommended good practice requirements and current National Fuel Gas Code or CSA B149 standards.

NOTE - *Furnace must be adjusted to obtain a temperature rise within the range specified on the unit nameplate. Failure to do so may cause erratic limit operation and premature heat exchanger failure.*

This ML193DFEK furnace must be installed so that its electrical components are protected from water.

Installation in Combination with a Cooling Coil

When this furnace is used with cooling units (FIGURE 3), it shall be installed in parallel with, or on the upstream side of, cooling units to avoid condensation in the heating compartment. With a parallel flow arrangement, a damper (or other means to control the flow of air) must adequately prevent chilled air from entering the furnace. If the damper is manually operated, it must be equipped to prevent operation of either the heating or the cooling unit, unless it is in the full **HEAT or COOL** setting.

When installed, this furnace must be electrically grounded according to local codes. In addition, in the United States, installation must conform with the current National Electric Code, ANSI/NFPA No. 70. The National Electric Code (ANSI/NFPA No. 70) is available from the following address:

National Fire Protection Association

1 Battery March Park

Quincy, MA 02269

In Canada, all electrical wiring and grounding for the unit must be installed according to the current regulations of the Canadian Electrical Code Part I (CSA Standard C22.1) and/or local codes.

NOTE - This furnace is designed for a minimum continuous return air temperature of 60°F (16°C) or an intermittent operation down to 55°F (13°C) dry bulb for cases where a night setback thermostat is used. Return air temperature must not exceed 85°F (29°C) dry bulb.

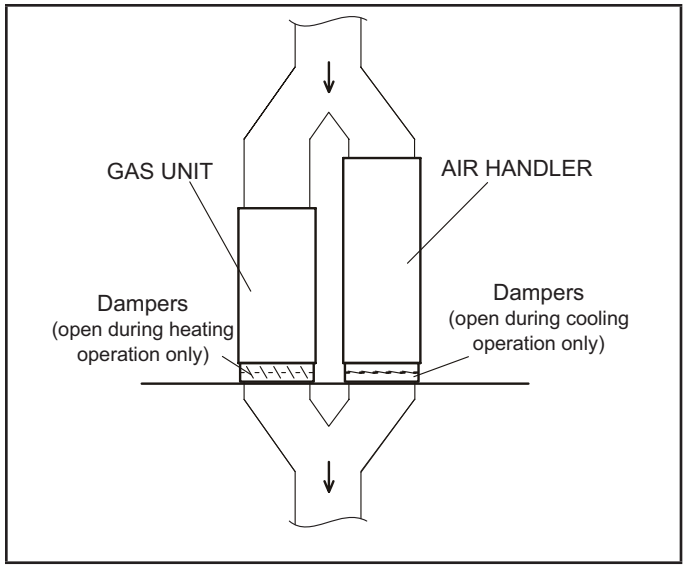

FIGURE 3

The ML193DFEK furnace may be installed in alcoves, closets, attics, basements, garages, utility rooms and crawl spaces.

This furnace design has not been CSA certified for installation in mobile homes, recreational vehicles, or outdoors.

Never use an open flame to test for gas leaks. Check all connections using a commercially available soap solution made specifically for leak detection.

Use of Furnace as Construction Heater

Units may be used for heating of buildings or structures under construction, if the following conditions are met to ensure proper operation:

DO NOT USE THE UNIT FOR CONSTRUCTION HEAT UNLESS ALL OF THE FOLLOWING CRITERIA ARE MET:

- Furnace must be in its final location. The vent system must be permanently installed per these installation instructions.
- Furnace must be installed as a two pipe system and one hundred percent (100%) outdoor air must be provided for combustion air requirements during construction.
- A room thermostat must control the furnace. The use of fixed jumpers that will provide continuous heating is prohibited.
- The input rate and temperature rise must be set per the furnace rating plate.
- Supply and Return air ducts must be provided and sealed to the furnace. Return air must be terminated outside of the space where furnace is installed.
- Return air temperature range between 60°F (16°C) and 80°F (27°C) must be maintained.
- The refrigerant leak detection sensor must be inspected for dust/debris deposits. Please refer to the evaporator coil and/or refrigerant detection sensor kit instructions for additional information.

- MERV 11 or greater air filters must be installed in the system and must be regularly inspected and maintained (e.g., regular static checks and replaced at end of life) during construction.
- Blower and vestibule access panels must be in place on the furnace at all times.
- The furnace heat exchanger, components, duct system, and evaporator coils must be thoroughly cleaned following final construction clean−up.
- Air filters must be replaced upon construction completion.
- All furnace operating conditions (including ignition, input rate, temperature rise and venting) must be verified in accordance with these installation instructions.

EQUIPMENT MAY EXPERIENCE PREMATURE COMPONENT FAILURE AS A RESULT OF FAILURE TO FOLLOW THE ABOVE INSTALLATION INSTRUCTIONS. FAILURE TO FOLLOW THE ABOVE INSTALLATION INSTRUCTIONS VOIDS THE MANUFACTURER'S EQUIPMENT LIMITED WARRANTY. LENNOX DISCLAIMS ALL LIABILITY IN CONNECTION WITH INSTALLER'S FAILURE TO FOLLOW THE ABOVE INSTALLATION INSTRUCTIONS.

NOTWITHSTANDING THE FOREGOING, INSTALLER IS RESPONSIBLE FOR CONFIRMING THAT THE USE OF CONSTRUCTION HEAT IS CONSISTENT WITH THE POLICIES AND CODES OF ALL REGULATING ENTITIES. ALL SUCH POLICIES AND CODES MUST BE ADHERED TO.

General

These instructions are intended as a general guide and do not supersede local codes in any way. Consult authorities having jurisdiction before installation.

In addition to the requirements outlined previously, the following general recommendations must be considered when installing a ML193DFEK furnace:

- Place the furnace as close to the center of the air distribution system as possible. The furnace should also be located close to the chimney or vent termination point.
- When the furnace is installed in non-direct vent applications, do not install the furnace where drafts might blow directly into it. This could cause improper combustion and unsafe operation.
- When the furnace is installed in non-direct vent applications, do not block the furnace combustion air opening with clothing, boxes, doors, etc. Air is needed for proper combustion and safe unit operation.
- When the furnace is installed in an attic or other insulated space, keep insulation away from the furnace.
- When the furnace is installed in an unconditioned space, consider provisions required to prevent freezing of condensate drain system.

⚠ CAUTION

ML193DFEK unit should not be installed in areas normally subject to freezing temperatures.

Combustion, Dilution & Ventilation Air

If the ML193DFEK is installed as a Non-Direct Vent Furnace, follow the guidelines in this section.

NOTE - *In Non-Direct Vent installations, combustion air is taken from indoors or ventilated attic or crawlspace and flue gases are discharged out-doors.*

⚠ WARNING

Insufficient combustion air can cause headaches, nausea, dizziness or asphyxiation. It will also cause excess water in the heat exchanger resulting in rusting and premature heat exchanger failure. Excessive exposure to contaminated combustion air will result in safety and performance related problems. Avoid exposure to the following substances in the combustion air supply:

Permanent wave solutions
Chlorinated waxes and cleaners
Chlorine base swimming pool chemicals
Water softening chemicals
De-icing salts or chemicals
Carbon tetrachloride
Halogen type refrigerants
Cleaning solvents (such as perchloroethylene)
Printing inks, paint removers, varnishes, etc.
Hydrochloric acid
Cements and glues
Antistatic fabric softeners for clothes dryers
Masonry acid washing materials

In the past, there was no problem in bringing in sufficient outdoor air for combustion. Infiltration provided all the air that was needed. In today's homes, tight construction practices make it necessary to bring in air from outside for combustion. Take into account that exhaust fans, appliance vents, chimneys, and fireplaces force additional air that could be used for combustion out of the house. Unless outside air is brought into the house for combustion, negative pressure (outside pressure is greater than inside pressure) will build to the point that a downdraft can occur in the furnace vent pipe or chimney. As a result, combustion gases enter the living space creating a potentially dangerous situation.

In the absence of local codes concerning air for combustion and ventilation, use the guidelines and procedures in this section to install ML193DFEK furnaces to ensure efficient and safe operation. You must consider combustion air needs and requirements for exhaust vents and gas piping. A portion of this information has been reprinted with permission from the National Fuel Gas Code (ANSIZ223.1/ NFPA 54). This reprinted material is not the complete and official position of the ANSI on the referenced subject, which is represented only by the standard in its entirety.

In Canada, refer to the CSA B149 installation codes.

⚠ CAUTION

Do not install the furnace in a corrosive or contaminated atmosphere. Meet all combustion and ventilation air requirements, as well as all local codes.

All gas-fired appliances require air for the combustion process. If sufficient combustion air is not available, the furnace or other appliance will operate inefficiently and unsafely. Enough air must be provided to meet the needs of all fuel-burning appliances and appliances such as exhaust fans which force air out of the house. When fireplaces, exhaust fans, or clothes dryers are used at the same time as the furnace, much more air is required to ensure proper combustion and to prevent a downdraft. Insufficient air causes incomplete combustion which can result in carbon monoxide.

In addition to providing combustion air, fresh outdoor air dilutes contaminants in the indoor air. These contaminants may include bleaches, adhesives, detergents, solvents and other contaminants which can corrode furnace components.

The requirements for providing air for combustion and ventilation depend largely on whether the furnace is installed in an unconfined or a confined space.

Unconfined Space

An unconfined space is an area such as a basement or large equipment room with a volume greater than 50 cubic feet (1.42 m3) per 1,000 Btu (.29 kW) per hour of the combined input rating of all appliances installed in that space. This space also includes adjacent rooms which are not separated by a door. Though an area may appear to be unconfined, it might be necessary to bring in outdoor air for combustion if the structure does not provide enough air by infiltration. If the furnace is located in a building of tight construction with weather stripping and caulking around the windows and doors, follow the procedures in the air from outside section.

Confined Space

A confined space is an area with a volume less than 50 cubic feet (1.42 m3) per 1,000 Btu (.29 kW) per hour of the combined input rating of all appliances installed in that space. This definition includes furnace closets or small equipment rooms.

When the furnace is installed so that supply ducts carry air circulated by the furnace to areas outside the space containing the furnace, the return air must be handled by ducts which are sealed to the furnace casing and which terminate outside the space containing the furnace. This is especially important when the furnace is mounted on a platform in a confined space such as a closet or small equipment room. Even a small leak around the base of the unit at the platform or at the return air duct connection can cause a potentially dangerous negative pressure condition. Air for combustion and ventilation can be brought into the confined space either from inside the building or from outside.

Air from Inside

If the confined space that houses the furnace adjoins a space categorized as unconfined, air can be brought in by providing two permanent openings between the two spaces. Each opening must have a minimum free area of 1 square inch (645 mm2) per 1,000 Btu (.29 kW) per hour of total input rating of all gas-fired equipment in the confined space. Each opening must be at least 100 square inches (64516 mm2). One opening shall be within 12 inches (305 mm) of the top of the enclosure and one opening within 12 inches (305 mm) of the bottom. See FIGURE 4.

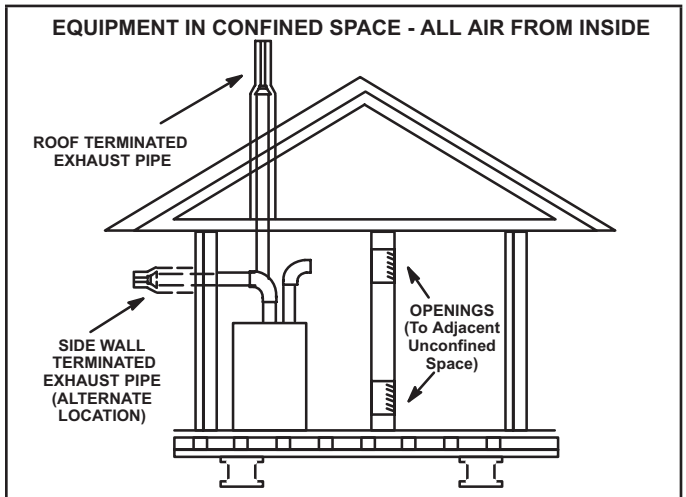

***NOTE** - Each opening shall have a free area of at least one square inch per 1,000 Btu (645mm^2 per .29kW) per hour of the total input rating of all equipment in the enclosure, but not less than 100 square inches (64516mm.$^{2)}$.*

FIGURE 4

Air from Outside

If air from outside is brought in for combustion and ventilation, the confined space shall be provided with two permanent openings. One opening shall be within 12” (305mm) of the top of the enclosure and one within 12” (305mm) of the bottom. These openings must communicate directly or by ducts with the outdoors or spaces (crawl or attic) that freely communicate with the outdoors or indirectly through vertical ducts. Each opening shall have a minimum free area of 1 square inch per 4,000 Btu (645mm2 per 1.17kW) per hour of total input rating of all equipment in the enclosure. When communicating with the outdoors through horizontal ducts, each opening shall have a minimum free area of 1 square inch per 2,000 Btu (645mm2 per .59kW) per total input rating of all equipment in the enclosure (FIGURE 5). It is also permissible to bring in air for combustion from a ventilated attic (FIGURE 6) or ventilated crawl space (FIGURE 7).

EQUIPMENT IN CONFINED SPACE - ALL AIR FROM OUTSIDE
(Inlet Air from Crawl Space and Outlet Air to Outside)

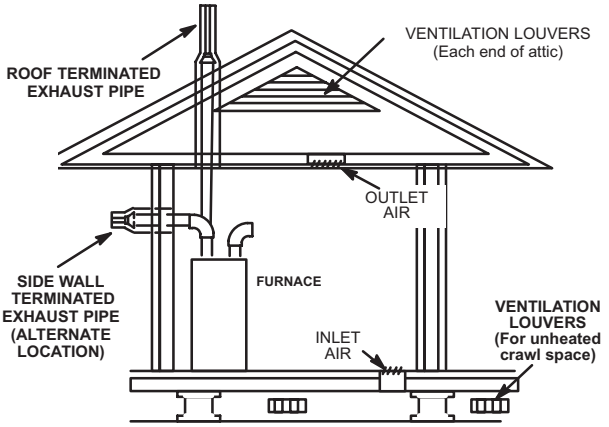

***NOTE**-The inlet and outlet air openings shall each have a free area of at least one square inch per 4,000 Btu (645mm^2 per 1.17kW) per hour of the total input rating of all equipment in the enclosure.*

FIGURE 5

EQUIPMENT IN CONFINED SPACE
(Inlet Air from Ventilated Attic and Outlet Air to Outside)

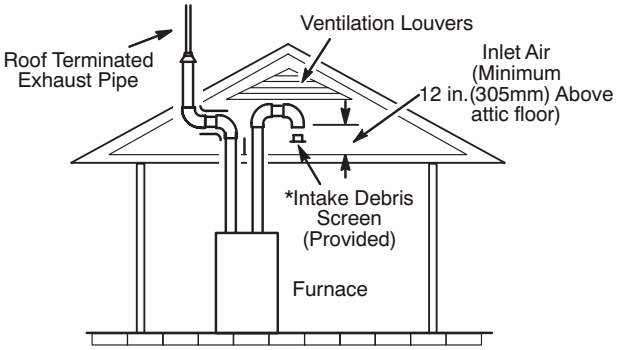

***NOTE**-The inlet and outlet air openings shall each have a free area of at least one square inch per 4,000 Btu (645mm^2 per 1.17kW) per hour of the total input rating of all equipment in the enclosure.*

FIGURE 6

EQUIPMENT IN CONFINED SPACE
(Inlet Air from Ventilated Crawlspace and Outlet Air to Outside)

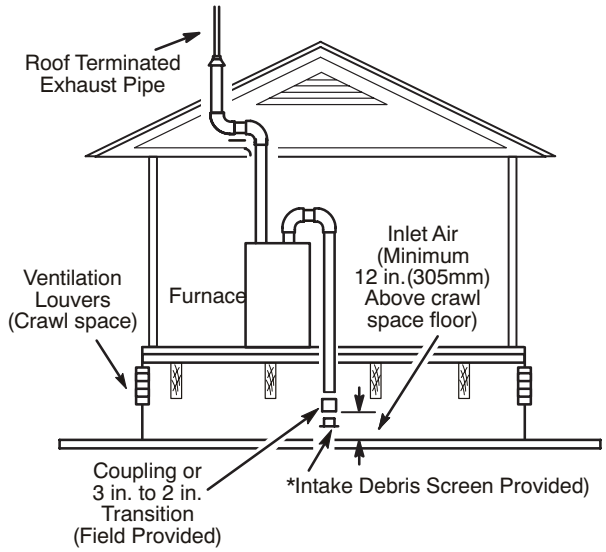

***NOTE**-The inlet and outlet air openings shall each have a free area of at least one square inch per 4,000 Btu (645mm^2 per 1.17kW) per hour of the total input rating of all equipment in the enclosure.*

FIGURE 7

When ducts are used, they shall be of the same cross-sectional area as the free area of the openings to which they connect. The minimum dimension of rectangular air ducts shall be no less than 3 inches (75 mm). In calculating free area, the blocking effect of louvers, grilles, or screens must be considered. If the design and free area of protective covering is not known for calculating the size opening required, it may be assumed that wood louvers will have 20 to 25 percent free area and metal louvers and grilles will have 60 to 75 percent free area. Louvers and grilles must be fixed in the open position or interlocked with the equipment so that they are opened automatically during equipment operation.

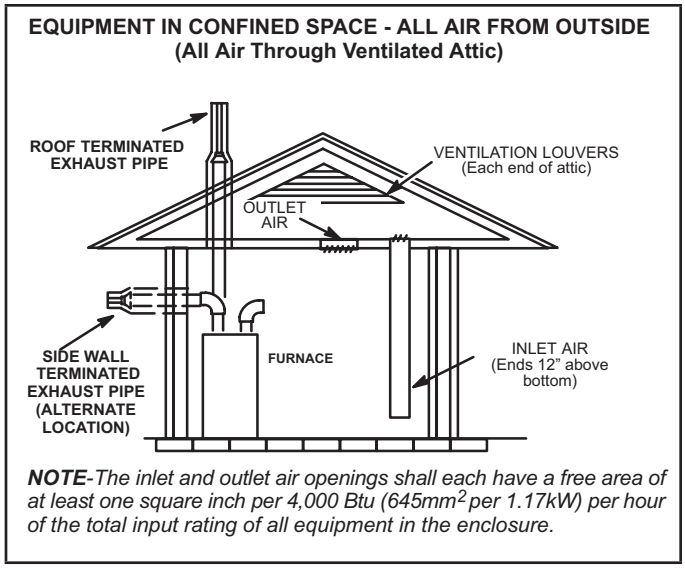

FIGURE 8

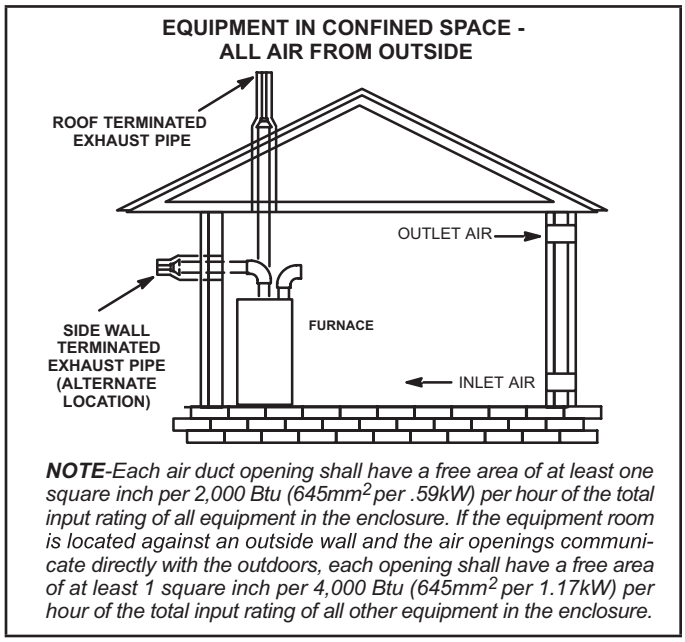

FIGURE 9

Shipping Bolt Removal

Units with 1/2 and 3/4 hp blower motor are equipped with three flexible legs and one rigid leg. The rigid leg is equipped with a shipping bolt and a flat white plastic washer (rather than the rubber mounting grommet used with a flexible mounting leg). See FIGURE 10. **The bolt and washer must be removed before the furnace is placed into operation.** After the bolt and washer have been removed, the rigid leg will not touch the blower housing.

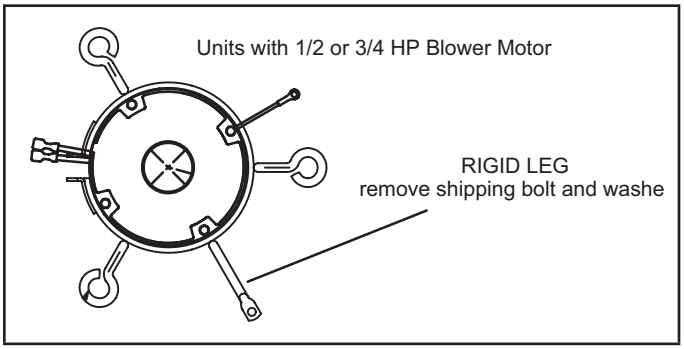

FIGURE 10

Installation - Setting Equipment

⚠ WARNING

Do not install the furnace on its front, back or in the horizontal position. See FIGURE 12. Do not connect the return air ducts to the back of the furnace. Doing so will adversely affect the operation of the safety control devices, which could result in personal injury or death.

Select a location that allows for the required clearances that are listed on the unit nameplate. Also consider gas supply connections, electrical supply, vent connection, condensate trap and drain connections, and installation and service clearances [24 inches (610 mm) at unit front]. ***The unit must be level from side to side. Unit may be positioned from level to 1/2" toward the front to aid in draining. See FIGURE 11.***

Allow for clearances to combustible materials as indicated on the unit nameplate. Minimum clearances for closet or alcove installations are shown in FIGURE 13.

⚠ WARNING

Blower access panel must be securely in place when blower and burners are operating. Gas fumes, which could contain carbon monoxide, can be drawn into living space resulting in personal injury or death.

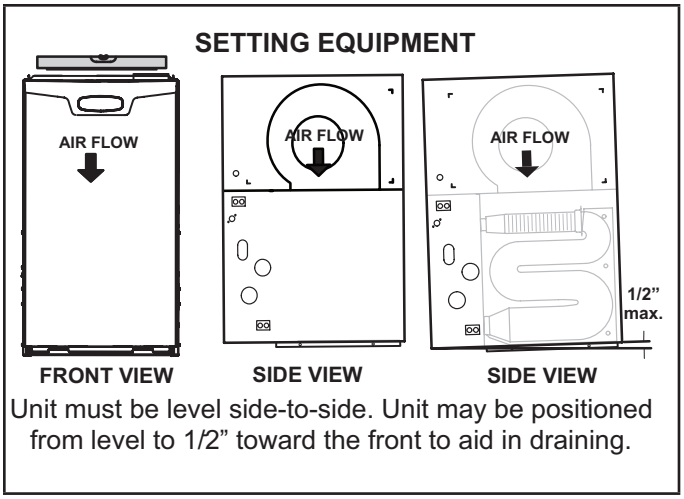

FIGURE 11

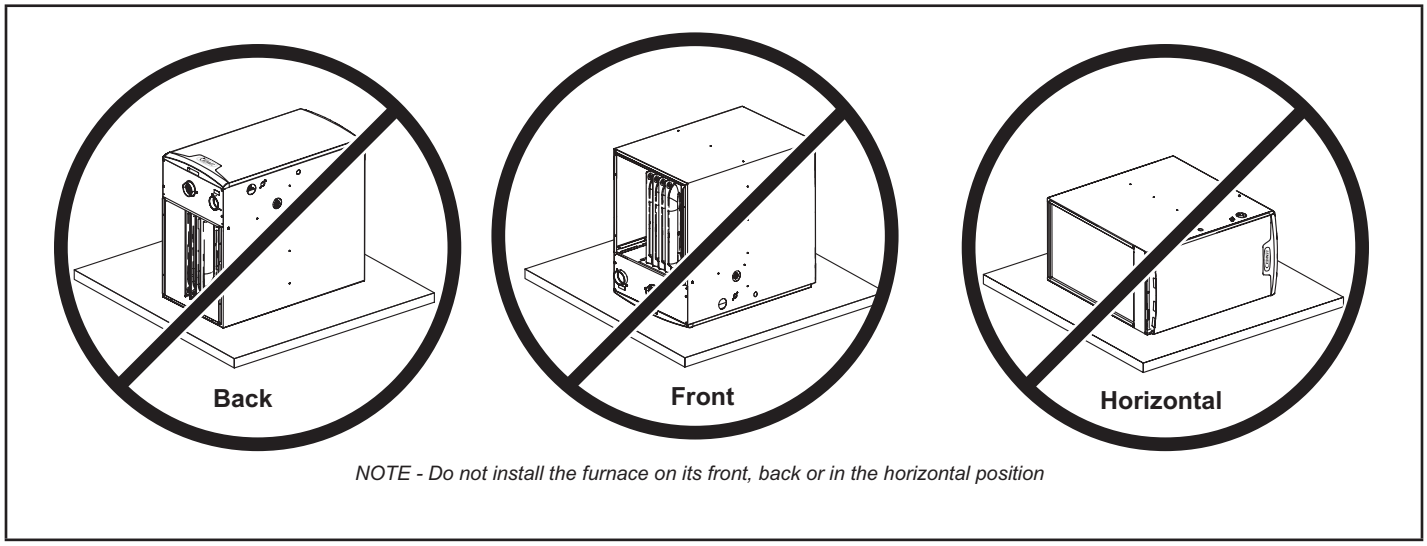

FIGURE 12

⚠ WARNING

Improper installation of the furnace can result in personal injury or death. Combustion and flue products must never be allowed to enter the return air system or air in the living space. Use sheet metal screws and joint tape to seal return air system to furnace. In platform installations with furnace return, the furnace should be sealed airtight to the return air plenum. A door must never be used as a portion of the return air duct system. The base must provide a stable support and an airtight seal to the furnace. Allow absolutely no sagging, cracks, gaps, etc. For no reason should return and supply air duct systems ever be connected to or from other heating devices such as a fireplace or stove, etc. Fire, explosion, carbon monoxide poisoning, personal injury and/or property damage could result.

The unit may be installed three ways in downflow applications: on non-combustible flooring, on combustible flooring using an additive base, or on a reverse-flow cooling coil cabinet. **Do not drag the unit across the floor in the downflow position. Floor and furnace flange damage will result. Refer to FIGURE 13 for clearances in downflow applications.**

Downflow Application Installation Clearances

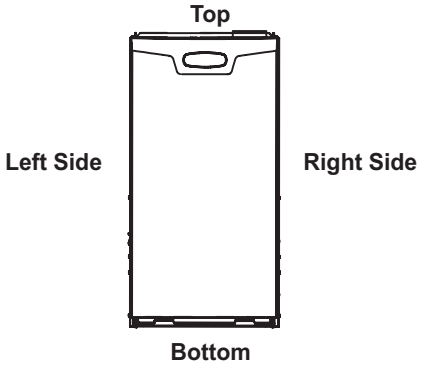

Top	0
*Front	0
Back	0
Sides	0†
Vent	0
Floor	NC‡

*Front clearance in alcove installation must be 24 in. (610 mm). Maintain a minimum of 24 in. (610 mm) for front service access.
†Allow proper clearances to accommodate condensate trap and vent pipe installation.
‡The furnace may be installed on a combustible wood floor if an optional base is installed between the furnace and the combustible floor.

FIGURE 13

Installation on Non-Combustible Flooring FIGURE 14

1 - Cut floor opening keeping in mind clearances listed on unit rating plate. Also keep in mind gas supply connections, electrical supply, flue and air intake connections and sufficient installation and servicing clearances. See TABLE 1 for correct floor opening size.

2 - Flange warm air plenum and lower the plenum into the opening.

3 - Set the unit over the plenum and seal the plenum to the unit.

4 - Ensure that the seal is adequate.

TABLE 1

NON-COMBUSTIBLE FLOOR OPENING SIZE

Cabinet Width	Front to Rear		Side to Side	
	in.	mm	in	mm
B (17.5”)	19-3/4	502	16-5/8	422
C (21”)	19-3 4	502	20-1/8	511

NOTE - Floor opening dimensions listed are 1/4 inch (6 mm) larger than the unit opening. See dimension drawing on page 2.

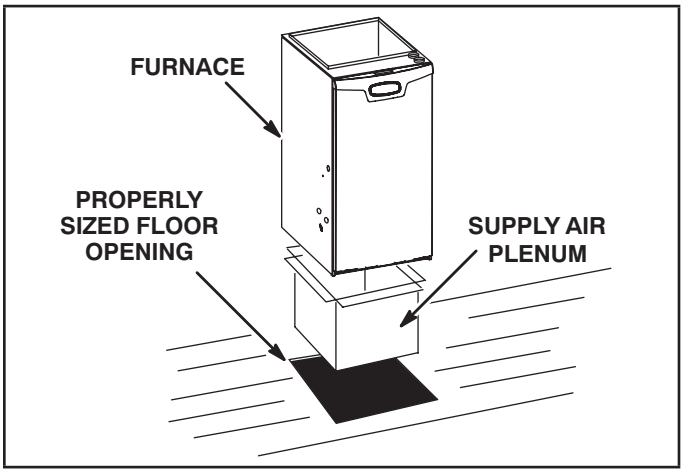

FIGURE 14

Installation on Combustible Flooring FIGURE 15

1 - When unit is installed on a combustible floor, a downflow combustible flooring base must be installed between the furnace and the floor. The base must be ordered separately. SeeTABLE 2 for opening size to cut in floor.

⚠ CAUTION

The furnace and combustible flooring base shall not be installed directly on carpeting, tile, or other combustible material other than wood flooring.

TABLE 2

COMBUSTIBLE FLOORING BASE OPENING SIZE

Cabinet Width	Catalog Number	Front to Rear		Side to Side	
		in	mm	in	mm
B (17.5”)	11M60	22	559	18-3/4	476
C (21”)	11M61	22	559	22-3/4	578

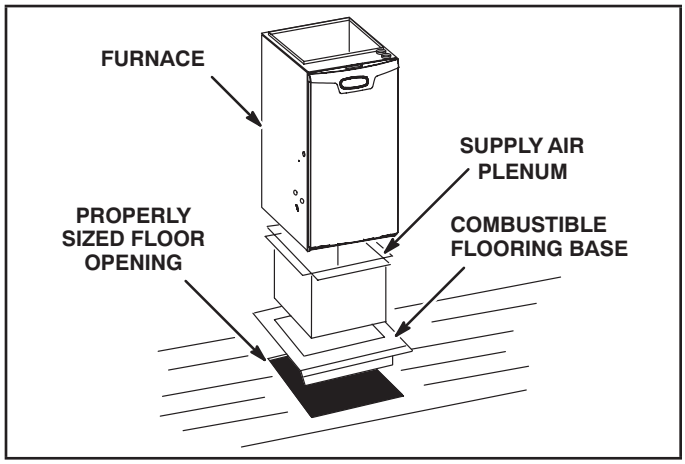

FIGURE 15

2 - After opening is cut, set the combustible flooring base into opening.

3 - Check fiberglass strips on the combustible flooring base to make sure they are properly glued and positioned.

4 - Lower supply air plenum into the combustible flooring base until plenum flanges seal against fiberglass strips.

NOTE - *Be careful not to damage fiberglass strips. Check for a tight seal.*

5 - Set the furnace over the plenum.

6 - Ensure that the seal between the furnace and plenum is adequate.

Installation on Cooling Coil Cabinet FIGURE 16

NOTE - *Downflow combustible flooring kit is not used..*

1 - Refer to reverse-flow coil installation instructions for correctly sized opening in floor and installation of cabinet.

2 - When cooling cabinet is in place, set and secure the furnace according to the instructions that are provided with the cooling coil. Secure the furnace to the cabinet.

3 - Seal the cabinet and check for air leaks.

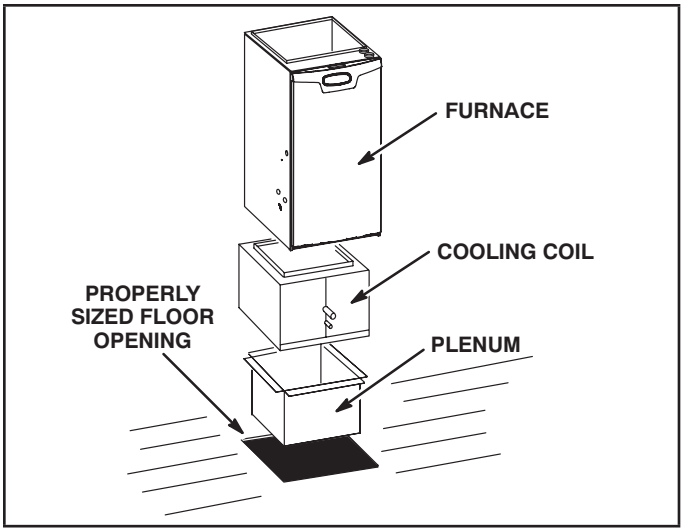

FIGURE 16

Return Air Opening -- Downflow Units

Return air may be brought in only through the top opening of a furnace installed in the downflow position. The following steps should be taken when installing plenum:

1 - Bottom edge of plenum should be flanged with a hemmed edge (FIGURE 17 and FIGURE 18).

2 - Sealing strips should be used to ensure an airtight seal between the cabinet and the plenum.

3 - In all cases, plenum should be secured to top of furnace using sheet metal screws.

4 - Make certain that an adequate seal is made.

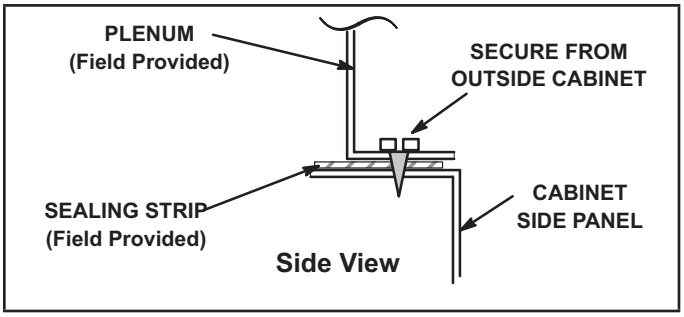

FIGURE 17

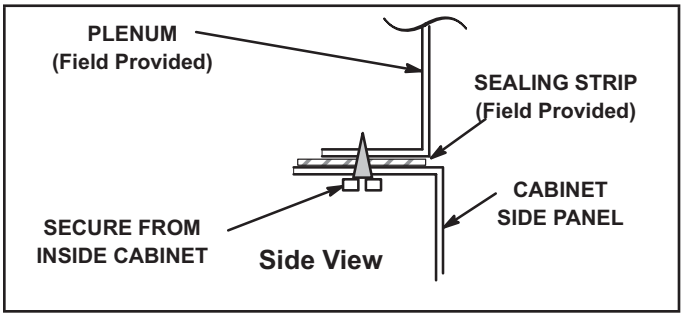

FIGURE 18

Filters

This unit is not equipped with a filter or rack. A field-provided filter is required for the unit to operate properly. TABLE 3 lists recommended filter size.

A filter must be in place whenever the unit is operating.

⚠ IMPORTANT

If a high efficiency filter is being installed as part of this system to ensure better indoor air quality, the filter must be properly sized. High efficiency filters have a higher static pressure drop than standard efficiency glass/foam filters. If the pressure drop is too great, system capacity and performance may be reduced. The pressure drop may also cause the limit to trip more frequently during the winter and the indoor coil to freeze in the summer, resulting in an increase in the number of service calls.

Before using any filter with this system, check the specifications provided by the filter manufacturer against the data given in the appropriate Lennox Product Specifications bulletin. Additional information is provided in Service and Application Note ACC002 (August 2000).

TABLE 3

Furnace Cabinet Width	Minimum Filter Size
17-1/2”	16 x 25 x 1 (1)
21”	

Duct System

Use industry-approved standards to size and install the supply and return air duct system. Refer to ACCA Manual D. This will result in a quiet and low-static system that has uniform air distribution. See FIGURE 19 for proper duct installation.

Supply Air Plenum

If the furnace is installed without a cooling coil, a removable access panel should be installed in the supply air duct. The access panel should be large enough to permit inspection of the heat exchanger. The furnace access panel must always be in place when the furnace is operating and it must not allow leaks into the supply air duct system.

NOTE - *This furnace is not certified for operation in heating mode (indoor blower operating at selected heating speed) with an external static pressure which exceeds 0.5 inches w.c. Operation at these conditions may result in improper limit operation.*

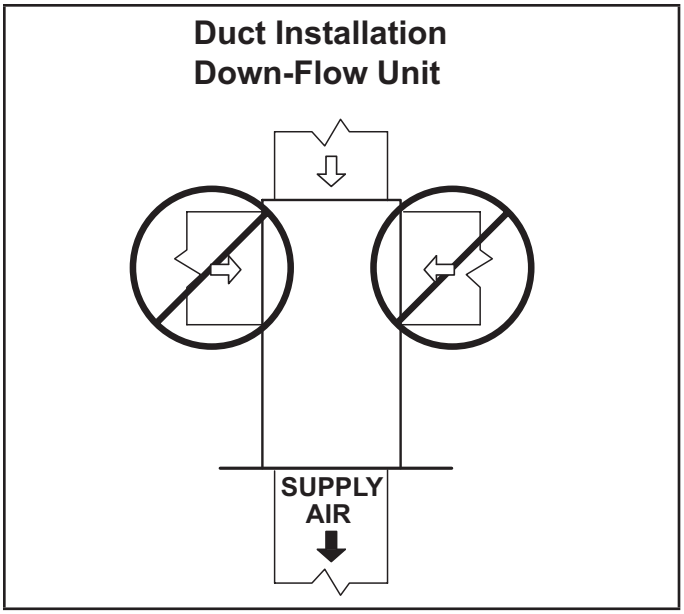

FIGURE 19

Return Air Plenum

NOTE - *Return air must not be drawn from a room where this furnace, or any other gas-fueled appliance (i.e., water heater), or carbon monoxide-producing device (i.e., wood fireplace) is installed.*

When return air is drawn from a room, a negative pressure is created in the room. If a gas appliance is operating in a room with negative pressure, the flue products can be pulled back down the vent pipe and into the room. This reverse flow of the flue gas may result in incomplete combustion and the formation of carbon monoxide gas. This raw gas or toxic fumes might then be distributed throughout the house by the furnace duct system.

Use fiberglass sealing strips, caulking, or equivalent sealing method between the plenum and the furnace cabinet to ensure a tight seal. If a filter is installed, size the return air duct to fit the filter frame.

Pipe & Fittings Specifications

All pipe, fittings, primer and solvent cement must conform with American National Standard Institute and the American Society for Testing and Materials (ANSI/ASTM) standards. The solvent shall be free flowing and contain no lumps, undissolved particles or any foreign matter that adversely affects the joint strength or chemical resistance of the cement. The cement shall show no gelation, stratification, or separation that cannot be removed by stirring. Refer to TABLE 4 for approved piping and fitting materials.

⚠ CAUTION

Solvent cements for plastic pipe are flammable liquids and should be kept away from all sources of ignition. Do not use excessive amounts of solvent cement when making joints. Good ventilation should be maintained to reduce fire hazard and to minimize breathing of solvent vapors. Avoid contact of cement with skin and eyes.

TABLE 4

PIPING AND FITTINGS SPECIFICATIONS

Schedule 40 PVC (Pipe)	D1785
Schedule 40 PVC (Fittings)	D2466
Schedule 40 CPVC (Pipe)	F441
Schedule 40 CPVC (Fittings)	F438
SDR-21 PVC or SDR-26 PVC (Pipe)	D2241
SDR-21 CPVC or SDR-26 CPVC (Pipe)	F442
Schedule 40 ABS (Pipe)	D1527
Schedule 40 ABS (Fittings)	D2468
ABS-DWV (Drain Waste & Vent) (Pipe & Fittings)	D2661
PVC-DWV (Drain Waste & Vent) Pipe & Fittings)	D2665
PRIMER & SOLVENT CEMENT	**ASTM SPECIFICATION**
PVC & CPVC Primer	F656
PVC Solvent Cement	D2564
CPVC Solvent Cement	F493
ABS Solvent Cement	D2235
PVC/CPVC/ABS All Purpose Cement For Fittings & Pipe of the same material	D2564, D2235, F493
ABS to PVC or CPVC Transition Solvent Cement	D3138
CANADA PIPE & FITTING & SOLVENT CEMENT	**MARKING**
PVC & CPVC Pipe and Fittings	ULC-S636
PVC & CPVC Solvent Cement	
ABS to PVC or CPVC Transition Cement	
POLYPROPYLENE VENTING SYSTEM	
PolyPro® by Duravent	
InnoFlue® by Centrotherm	
ECCO Polypropylene Vent™	
UL 1738 CERTIFIED GAS VENTING SYSTEM	
IPEX System1738 Schedule 40 PVC Pipes and Fittings	UL 1738
IPEX System1738 PVC FGV Cement & Primer	
POLYPROPYLENE VENTING SYSTEM	
InnoFlue® by Centrotherm	

⚠ IMPORTANT

Exhaust and intake connections are made of PVC. Use PVC primer and solvent cement when using PVC vent pipe. When using ABS vent pipe, use transitional solvent cement to make connections to the PVC fittings in the unit.

Use PVC primer and solvent cement or ABS solvent cement meeting ASTM specifications, refer to TABLE 4. As an alternate, use all purpose cement, to bond ABS, PVC, or CPVC pipe when using fittings and pipe made of the same materials. Use transition solvent cement when bonding ABS to either

PVC or CPVC.

Low temperature solvent cement is recommended during cooler weather. Metal or plastic strapping may be used for vent pipe hangers. Uniformly apply a liberal coat of PVC primer for PVC or use a clean dry cloth for ABS to clean inside socket surface of fitting and male end of pipe to depth of fitting socket.

Canadian Applications Only - *Pipe, fittings, primer and solvent cement used to vent (exhaust) this appliance must be certified to ULC S636 and supplied by a single manufacturer as part of an approved vent (exhaust) system. In addition, the first three feet of vent pipe from the furnace flue collar must be accessible for inspection.*

TABLE 5

OUTDOOR TERMINATION USAGE*

Input Size	Vent Pipe Dia. in.	STANDARD				CONCENTRIC		
		Flush Mount Kit	Wall Kit		Field Fabricated	1-1.2 inch	2 inch	3 inch
			2 inch	3 inch				
		51W11 (US) 51W12 (CA)	22G44 (US) [4]30G28 (CA)	44J40 (US) [4]81J20 (CA)		71M80 (US) [4]44W92 (CA)	69M29 (US) [4]44W92 (CA)	60L46 (US) [4]44W93 (CA)
045	[6]1-1/2	[3]YES	YES	[1]YES	[5]YES	[2]YES		
	2	[3]YES	YES	[1]YES	[5]YES	[2]YES		
	2-1/2	[3]YES	YES	[1]YES	[5]YES	[2]YES		
	3	[3]YES	YES	[1]YES	[5]YES	[2]YES		
070	[6]1-1/2	[3]YES	YES	[1]YES	[5]YES	[2]YES		
	2	[3]YES	YES	[1]YES	[5]YES	[2]YES		
	2-1/2	[3]YES	YES	[1]YES	[5]YES	[2]YES		
	3	[3]YES	YES	[1]YES	[5]YES	[2]YES		
090	2	[3]YES		YES	[5]YES		YES	YES
	2-1/2	[3]YES		YES	[5]YES		YES	YES
	3	[3]YES		YES	[5]YES		YES	YES

NOTE - Standard Terminations do not include any vent pipe or elbows external to the structure. Any vent pipe or elbows external to the structure must be included in total vent length calculations. See vent length tables.

* Kits must be properly installed according to kit instructions.

1Requires field-provided outdoor 1-1/2" exhaust accelerator.

2Concentric kits 71M80 and 44W92 include 1-1/2" outdoor accelerator, when uses with 045 and 070 input models. When using 1-1/2 inch vent pipe, transistion to 2" pipe before installing concentric kit.

3 Flush mount kits 51W11 and 51W12 includes 1-1/2 in. outdoor exhaust accelerator, required when used with 045, 070 and 090 input models. When using 1-1/2" vent pipe, transition to 2" pipe before installing flushmount kit.

4 Termination kits 30G28, 44W92, 4493 and 81J20 are certified to ULC S636 for use in Canada only.

5 SeeTABLE 10 for vent accelerator requirements.

6 Requires field provided 2" to 1-1/2" reducer.

Joint Cementing Procedure

All cementing of joints should be done according to the specifications outlined in ASTM D 2855.

NOTE - *A sheet metal screw may be used to secure the intake pipe to the connector, if desired. Use a drill or self tapping screw to make a pilot hole.*

⚠ DANGER

DANGER OF EXPLOSION!

Fumes from PVC glue may ignite during system check. Allow fumes to dissipate for at least 5 minutes before placing unit into operation.

1 - Measure and cut vent pipe to desired length.

2 - Debur and chamfer end of pipe, removing any ridges or rough edges. If end is not chamfered, edge of pipe may remove cement from fitting socket and result in a leaking joint.

3 - Clean and dry surfaces to be joined.

4 - Test fit joint and mark depth of fitting on outside of pipe.

5 - Uniformly apply a liberal coat of PVC primer for PVC or use a clean dry cloth for ABS to clean inside socket surface of fitting and male end of pipe to depth of fitting socket.

6 - Promptly apply solvent cement to end of pipe and inside socket surface of fitting. Cement should be applied lightly but uniformly to inside of socket. Take care to keep excess cement out of socket. Apply second coat to end of pipe.

NOTE - *Time is critical at this stage. Do not allow primer to dry before applying cement*

7 - Immediately after applying last coat of cement to pipe, and while both inside socket surface and end of pipe are wet with cement, forcefully insert end of pipe into socket until it bottoms out. Turn PVC pipe 1/4 turn during assembly (but not after pipe is fully inserted) to distribute cement evenly. DO NOT turn ABS or cellular core pipe.

NOTE - *Assembly should be completed within 20 seconds after last application of cement. Hammer blows should not be used when inserting pipe.*

8 - After assembly, wipe excess cement from pipe at end of fitting socket. A properly made joint will show a bead around its entire perimeter. Any gaps may indicate an improper assembly due to insufficient solvent.

9 - Handle joints carefully until completely set.

Venting Practices

NOTE - *For any Low GWP refrigerant systems with exposed line set joints installed in the same space, each non-direct vent furnace system must have a refrigerant detection sensor installed below the level of the burners (See "SECONDARY SENSOR REQUIREMENTS" on page 44). Any direct vent furnace system is not subject to this requirement.*

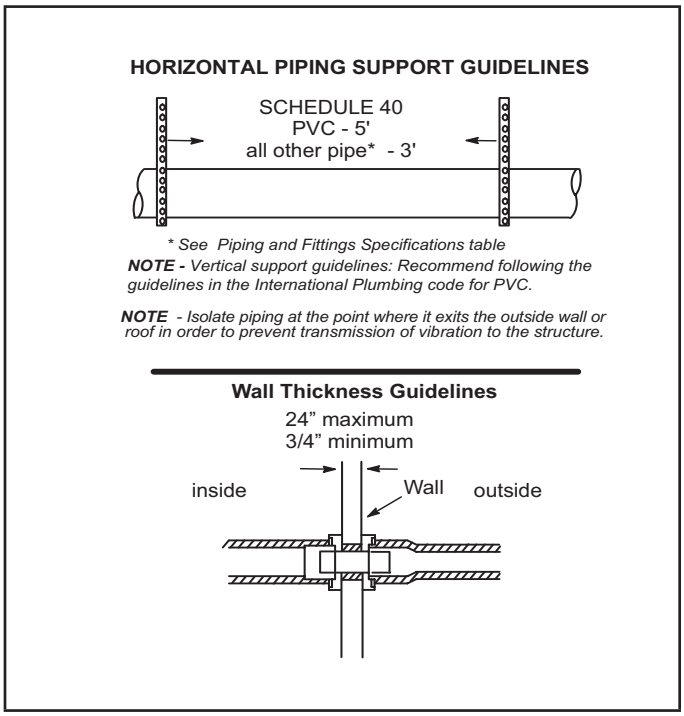

FIGURE 20

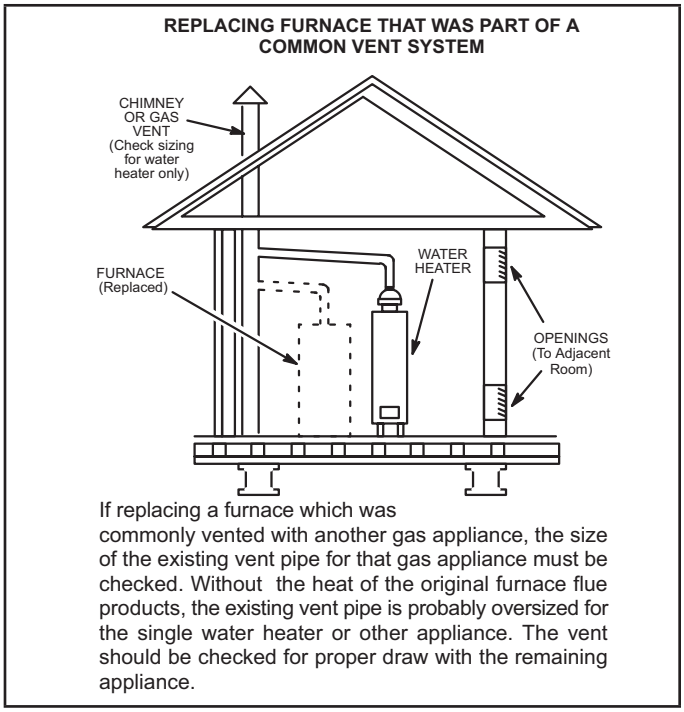

FIGURE 21

1 - In areas where piping penetrates joists or interior walls, hole must be large enough to allow clearance on all sides of pipe through center of hole using a hanger.

2 - When furnace is installed in a residence where unit is shut down for an extended period of time, such as a vacation home, make provisions for draining condensate collection trap and lines.

Exhaust Piping (FIGURE 23 and FIGURE 24)

Route piping to outside of structure. Continue with installation following instructions given in piping termination section.

⚠ WARNING

Carbon Monoxide Poisoning Hazard

Cutting or altering exhaust or air intake pipes, which are located in the blower compartment, could result in Carbon Monoxide Poisoning or Death.

⚠ CAUTION

Do not discharge exhaust into an existing stack or stack that also serves another gas appliance. If vertical discharge through an existing unused stack is required, insert PVC pipe inside the stack until the end is even with the top or outlet end of the metal stack.

⚠ CAUTION

The exhaust vent pipe operates under positive pressure and must be completely sealed to prevent leakage of combustion products into the living space.

Vent Piping Guidelines

NOTE - *Lennox has approved the use of DuraVent® and Centrotherm manufactured vent pipe and terminations as an option to PVC. When using the PolyPro® by DuraVent or InnoFlue® by Centrotherm venting system the vent pipe requirements stated in the unit installation instruction – minimum & maximum vent lengths, termination clearances, etc. – apply and must be followed. Follow the instructions provided with PoyPro by DuraVent and InnoFlue by Centrotherm venting system for assembly or if requirements are more restrictive. The PolyPro by Duravent and InnoFlue by Centrotherm venting system must also follow the uninsulated and unconditioned space criteria TABLE 9.*

The ML193DFEK can be installed as either a Non-Direct Vent or a Direct Vent gas central furnace.

NOTE - *In Direct Vent installations, combustion air is taken from outdoors and flue gases are discharged outdoors. In Non-Direct Vent installations, combustion air is taken from indoors or ventilated attic or crawlspace and flue gases are discharged outdoors.*

Intake and exhaust pipe sizing -- Size pipe according to TABLE 6 (minimum) and TABLE 7 (maximum). Count all elbows inside and outside the home.

TABLE 6

MINIMUM VENT PIPE LENGTHS

ML193DFEK MODEL	MIN. VENT LENGTH*
045, 070, 090	15 ft or 5ft plus 2 elbows or 10 ft plus 1 elbow

**Any approved termination may be added to the minimum length listed. Two 45 degree elbows are the equivalent to one 90 degree elbow.*

Regardless of the diameter of pipe used, the standard roof and wall terminations described in section Exhaust Piping Terminations should be used. Exhaust vent termination pipe is sized to optimize the velocity of the exhaust gas as it exits the termination. Refer to TABLE 10.

In some applications which permit the use of several different sizes of vent pipe, a combination vent pipe may be used. Contact Lennox' Application Department for assistance in sizing vent pipe in these applications.

⚠ IMPORTANT

Do not use screens or perforated metal in exhaust or intake terminations. Doing so will cause freeze-ups and may block the terminations.

Use the following steps in the Piping Size Process to correctly size vent pipe diameter.

***NOTE -** Lennox offers a glueless vent adapter kit 17H92 as an option for exhaust exiting at the furnace top cap coupling.*

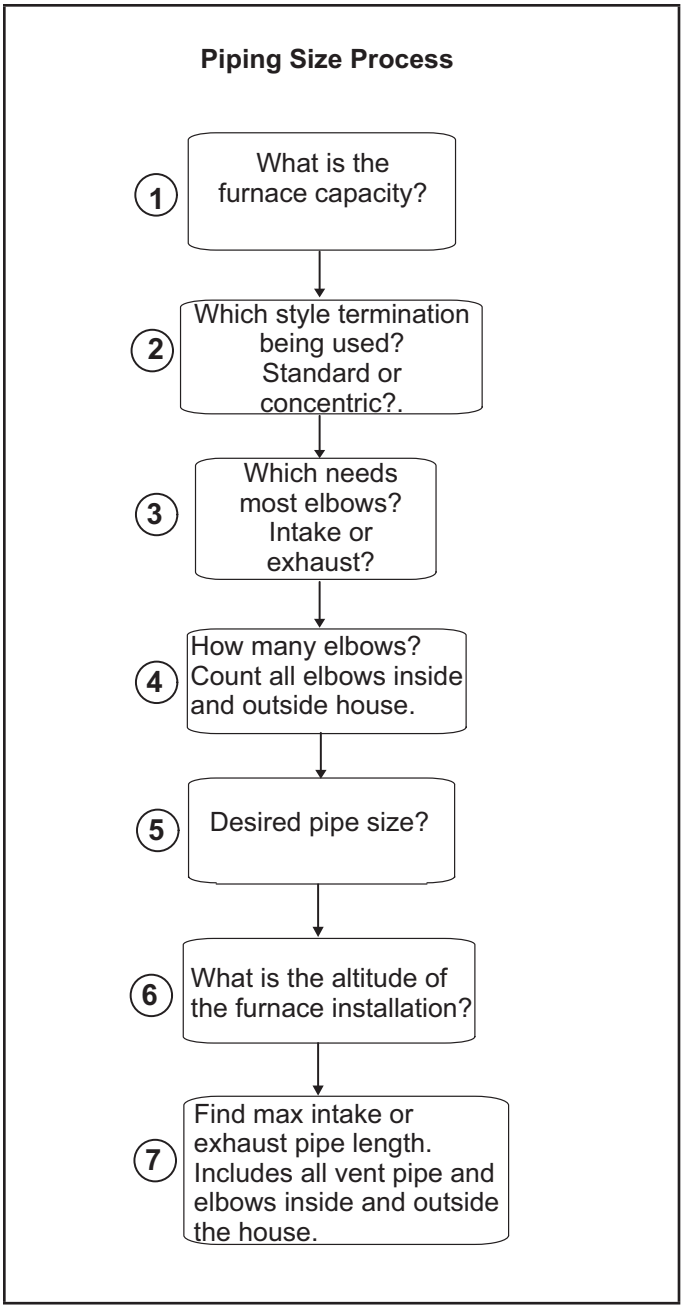

FIGURE 22

***NOTE -** It is acceptable to use any pipe size which fits within the guidelines allowed in table 7.*

***NOTE -** All horizontal runs of exhaust pipe must slope back toward unit. A minimum of 1/4" (6mm) drop for each 12" (305mm) of horizontal run is mandatory for drainage.*

***NOTE -** Exhaust pipe MUST be glued to furnace exhaust fittings.*

***NOTE -** Exhaust piping should be checked carefully to make sure there are no sags or low spots.*

TABLE 7

Maximum Allowable Intake or Exhaust Vent Length in Feet

**Size intake and exhaust pipe length separately. Values in table are for Intake OR Exhaust, not combined total. Both Intake and Exhaust must be same pipe size.*

NOTE - Additional vent pipe and elbows used to terminate the vent pipe outside the structure must be included in the total vent length calculation.

Standard Termination at Elevation 0 - 10,000 ft.												
Number Of 90° Elbows Used	1-1/2" Pipe			2" Pipe			2-1/2" Pipe			3" Pipe		
	Model			Model			Model			Model		
	045	070	090	045	070	090	045	070	090	045	070	090
1	20	15	n/a	61	46	24	100	80	43	127	127	108
2	15	10		56	41	19	95	75	38	122	122	103
3	10	n/a		51	36	14	90	70	33	117	117	98
4	n/a			46	31	n/a	85	65	28	112	112	93
5				41	26		80	60	23	107	107	88
6				36	21		75	55	18	102	102	83
7				31	16		70	50	13	97	97	78
8				26	11		65	45	n/a	92	92	73
9				21	n/a		60	40		87	87	68
10				16			55	35		82	82	63
Concentric Termination Elevation 0 - 10,000 ft.												
Number Of 90° Elbows Used	1-1/2" Pipe			2" Pipe			2-1/2" Pipe			3" Pipe		
	Model			Model			Model			Model		
	045	070	090	045	070	090	045	070	090	045	070	090
1	15	10	n/a	53	38	22	90	70	39	111	111	104
2	10	n/a		48	33	17	85	65	34	106	106	99
3	n/a			43	28	12	80	60	29	101	101	94
4				38	23	n/a	75	55	19	96	96	89
5				33	18		70	50	14	91	91	84
6				28	13		65	45	n/a	86	86	79
7				23	n/a		60	40		81	81	74
8				18			55	35		76	76	69
9				13			50	30		71	71	64
10				n/a			45	25		66	66	59

TABLE 8

Maximum Allowable Exhaust Vent Lengths With Furnace Installed in a Closet or Basement Using Ventilated Attic or Crawl Space For Intake Air in Feet

NOTE - Additional vent pipe and elbows used to terminate the vent pipe outside the structure must be included in the total vent length calculation.

Standard Termination at Elevation 0 - 10,000 ft.												
Number Of 90° Elbows Used	1-1/2" Pipe			2" Pipe			2-1/2" Pipe			3" Pipe		
	Model			Model			Model			Model		
	045	070	090	045	070	090	045	070	090	045	070	090
1	15	10	n/a	51	36	14	85	65	28	107	107	88
2	10	n/a		46	31	9	80	60	23	102	102	83
3	n/a			41	26	4	75	55	18	97	97	78
4				36	21		70	50	8	92	92	73
5				31	16		65	45	3	87	87	68
6				26	11		60	40	n/a	82	82	63
7				21	6		55	35		77	77	58
8				16	1		50	30		72	72	53
9				11	n/a		45	25		67	67	48
10				6			40	20		62	62	43

TYPICAL *EXHAUST* PIPE CONNECTIONS

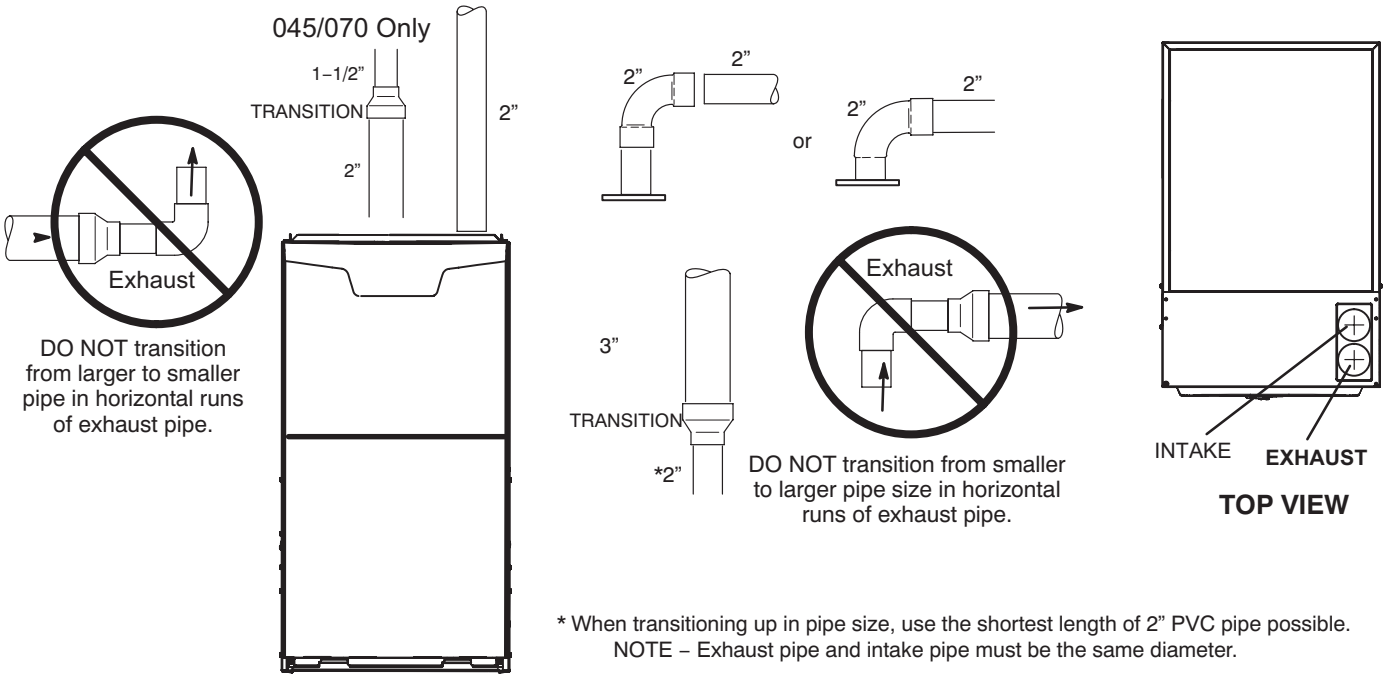

* When transitioning up in pipe size, use the shortest length of 2" PVC pipe possible.
NOTE – Exhaust pipe and intake pipe must be the same diameter.

FIGURE 23

TYPICAL *INTAKE* PIPE CONNECTIONS

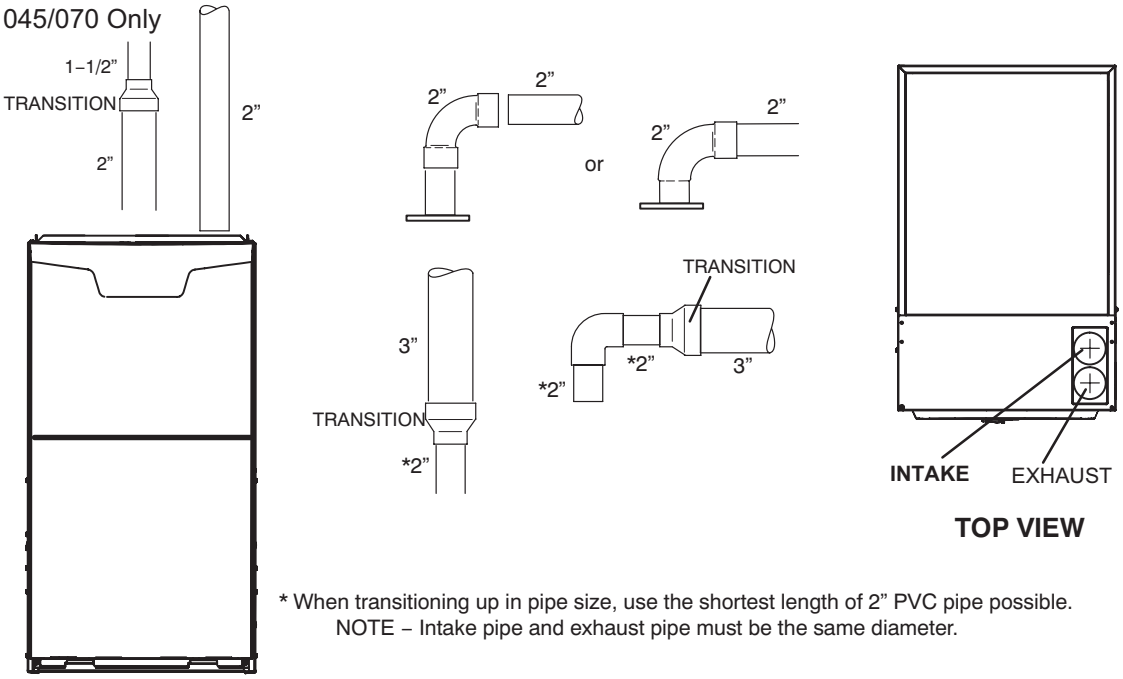

* When transitioning up in pipe size, use the shortest length of 2" PVC pipe possible.
NOTE – Intake pipe and exhaust pipe must be the same diameter.

FIGURE 24

Intake Piping

The ML193DFEK furnace may be installed in either **Direct Vent or Non-Direct Vent** applications. In non-direct vent applications, when intake air will be drawn into the furnace from the surrounding space, the indoor air quality must be considered. Guidelines listed in Combustion, Dilution and Ventilation Air section must be followed.

Follow the next two steps when installing the unit in **Direct Vent** applications, where combustion air is taken from outdoors and flue gases are discharged outdoors. The provided air intake screen must not be used in direct vent applications (outdoors).

1 - Use cement to secure the intake pipe to the inlet air connector.

2 - Route piping to outside of structure. Continue with installation following instructions given in general guide lines for piping terminations and intake and exhaust piping terminations for direct vent sections. Refer to TABLE 7 for pipe sizes.

TYPICAL AIR INTAKE PIPE CONNECTIONS
NON–DIRECT VENT APPLICATIONS

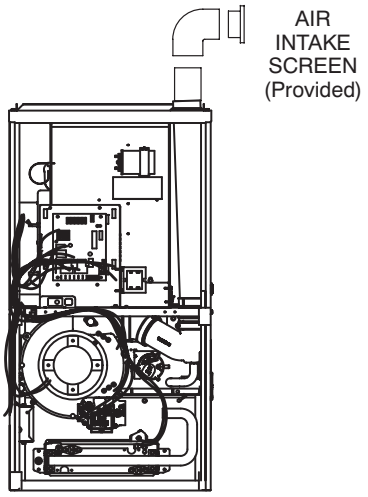

NOTE *- Air intake screen and elbow may be rotated, so that screen may be positioned to face forward or to either side.*

FIGURE 25

Follow the next two steps when installing the unit in **Non-Direct Vent applications** where combustion air is taken from indoors and flue gases are discharged outdoors.

1 - Use field-provided materials and the factory-provided air intake screen to route the intake piping as shown in FIGURE 25. Maintain a minimum clearance of 3” (76mm) around the air intake opening. The air intake opening (with the protective screen) should always be directed forward, or sideways.

2 - If intake air is drawn from a ventilated attic (FIGURE 26) or ventilated crawlspace (FIGURE 27) the exhaust vent length must not exceed those listed in TABLE 8 If 3” diameter pipe is used, reduce to 2” diameter pipe at the termination point to accommodate the debris screen.

3 - Use cement to secure the intake pipe to the connector, if desired.

⚠ CAUTION

If this unit is being installed in an application with combustion air coming in from a space serviced by an exhaust fan, power exhaust fan, or other device which may create a negative pressure in the space, take care when sizing the inlet air opening. The inlet air opening must be sized to accommodate the maximum volume of exhausted air as well as the maximum volume of combustion air required for all gas appliances serviced by this space.

EQUIPMENT IN CONFINED SPACE
(Inlet Air from Ventilated Attic and Outlet Air to Outside)

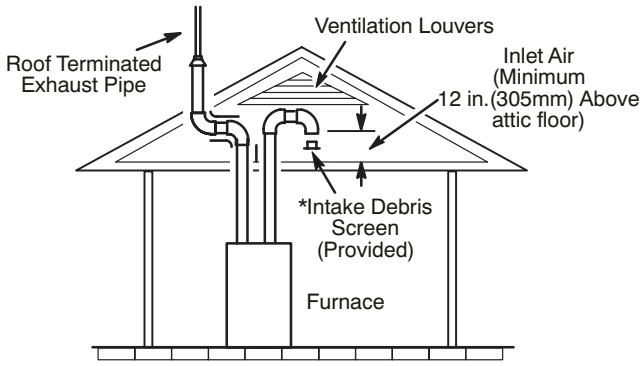

NOTE*-The inlet and outlet air openings shall each have a free area of at least one square inch per 4,000 Btu (645mm^2 per 1.17kW) per hour of the total input rating of all equipment in the enclosure.*

FIGURE 26

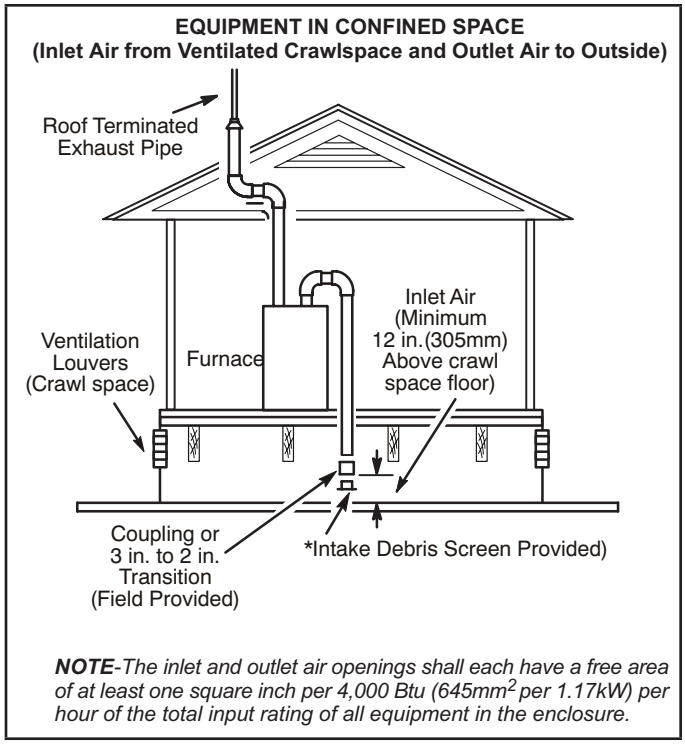

FIGURE 27

General Guidelines for Vent Terminations

In Non-Direct Vent applications, combustion air is taken from indoors and the flue gases are discharged to the outdoors. The ML193DFEK is then classified as a non-direct vent, Category IV gas furnace.

In Direct Vent applications, combustion air is taken from outdoors and the flue gases are discharged to the outdoors. The ML193DFEK is then classified as a direct vent, Category IV gas furnace.

In both Non-Direct Vent and Direct Vent applications, the vent termination is limited by local building codes. In the absence of local codes, refer to the current National Fuel Gas Code ANSI Z223-1/NFPA 54 in U.S.A., and current CSA-B149 Natural Gas and Propane Installation Codes in Canada for details.

Position termination according to location given in FIGURE 29 or FIGURE 30. In addition, position termination so it is free from any obstructions and 12” above the average snow accumulation.

At vent termination, care must be taken to maintain protective coatings over building materials (prolonged exposure to exhaust condensate can destroy protective coatings). It is recommended that the exhaust outlet not be located within 6 feet (1.8m) of an outdoor AC unit because the condensate can damage the painted coating.

NOTE - *See TABLE 9 for maximum allowed exhaust pipe length without insulation in unconditioned space during winter design temperatures below 32°F (0°C). If required exhaust pipe should be insulated with 1/2” (13mm) Armaflex or equivalent. In extreme cold climate areas, 3/4” (19mm) Armaflex or equivalent may be necessary. Insulation must be protected from deterioration. Armaflex with UV protection is permissable. Basements or other enclosed areas that are not exposed to the outdoor ambient temperature and are above 32 degrees F (0°C) are to be considered conditioned spaces.*

⚠ IMPORTANT

Do not use screens or perforated metal in exhaust terminations. Doing so will cause freeze-ups and may block the terminations.

⚠ IMPORTANT

For Canadian Installations Only:

In accordance to CSA International B149 installation codes, the minimum allowed distance between the combustion air intake inlet and the exhaust outlet of other appliances shall not be less than 12 inches (305mm).

TABLE 9

Maximum Allowable Exhaust Vent Pipe Length (in ft.) Without Insulation In Unconditioned Space For Winter Design Temperatures Single - Stage High Efficiency Furnace

Winter Design Temperatures1 °F (°C)	Vent Pipe Diameter	Unit Input Size					
		045		070		090	
		PVC	[2]PP	PVC	[2]PP	PVC	[2]PP
32 to 21 (0 to -6)	1-1/2”	25	N/A	20	N/A	N/A	N/A
	2 in	18	16	31	28	50	48
	2-1/2 in	13	N/A	24	N/A	42	N/A
	3 in	9	9	18	18	35	35
20 to 1 (-7 to -17)	1-1/2”	15	N/A	20	N/A	N/A	N/A
	2 in	9	8	18	16	32	29
	2-1/2 in	5	N/A	13	N/A	24	N/A
	3 in	1	1	8	8	19	19
0 to -20 (-18 to -29)	1-1/2”	10	N/A	15	N/A	N/A	N/A
	2 in	5	3	12	10	22	19
	2-1/2 in	1	N/A	7	N/A	15	N/A
	3 in	N/A	N/A	2	2	10	10

[1]Refer to 99% Minimum Design Temperature table provided in the current edition of the ASHRAE Fundamentals Handbook.

[2] PolyPro® poly-propylene vent pipe is a registered trademark of DuraVent®. Innoflue® is a registered trademark of Centrotherm Eco Systems.ECCO Polypropylene Vent™is a registered trademark of ECCO Manufacturing™..

NOTE - Concentric terminations are the equivalent of 5’ and should be considered when measuring pipe length.

NOTE - Maximum uninsulated vent lengths listed may include the termination(vent pipe exterior to the structure) and cannot exceed 5 linear feet or the maximum allowable intake or exhaust vent length listed in TABLE 7 or TABLE 8 which ever is less.

NOTE - If insulation is required in an unconditioned space, it must be located on the pipe closest to the furnace. See FIGURE 28.

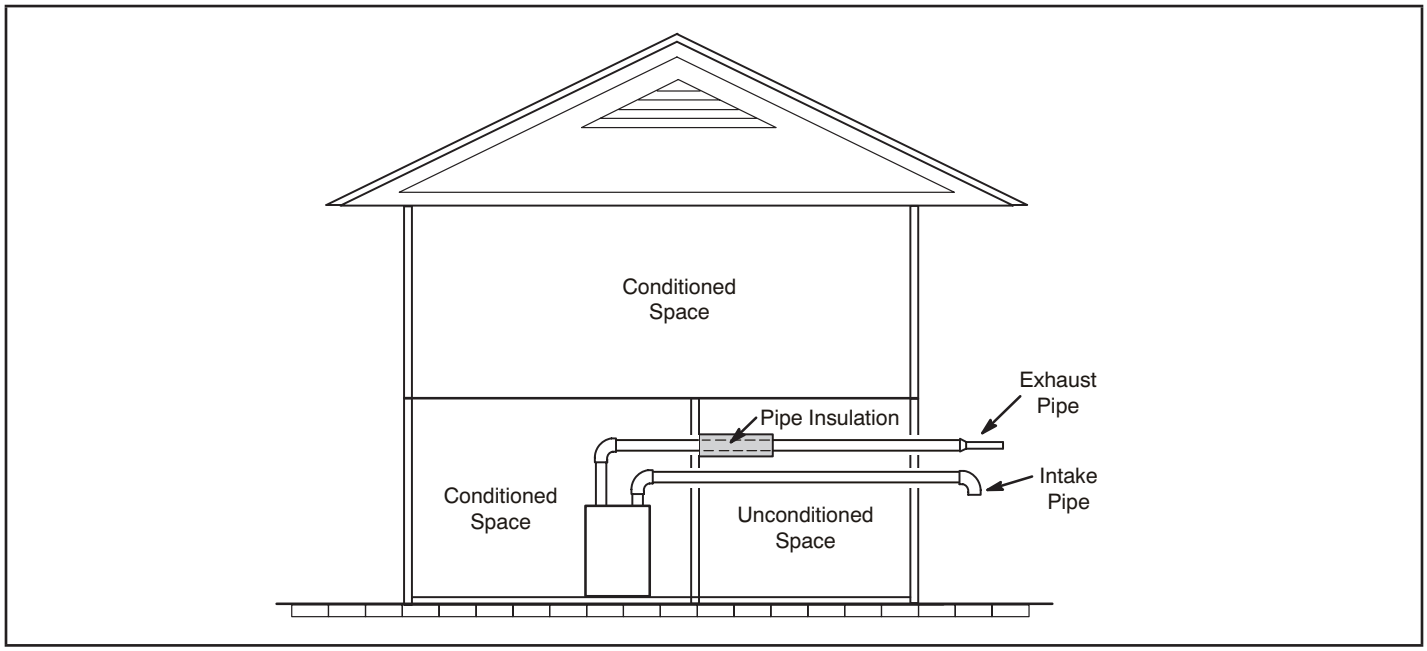

FIGURE 28

VENT TERMINATION CLEARANCES
FOR NON-DIRECT VENT INSTALLATIONS IN THE USA AND CANADA

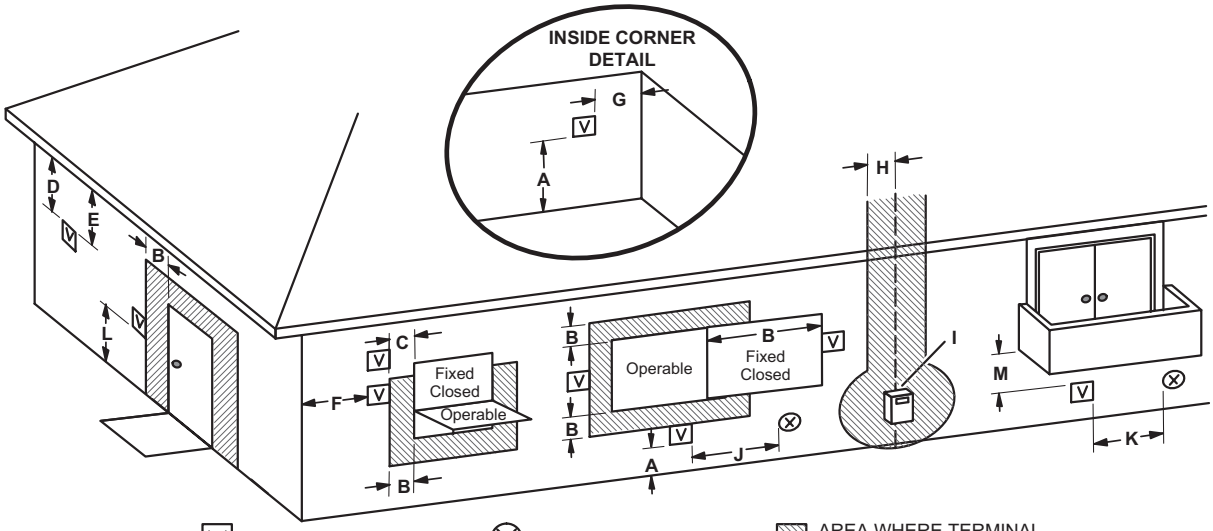

VENT TERMINAL AIR SUPPLY INLET AREA WHERE TERMINAL IS NOT PERMITTED

		US Installations[1]	Canadian Installations[2]
A =	Clearance above grade, veranda, porch, deck or balcony	12 inches (305mm) or 12 in. (305mm) above average snow accumulation.	12 inches (305mm) or 12 in. (305mm) above average snow accumulation.
B =	Clearance to window or door that may be opened	4 feet (1.2 m) below or to side of opening; 1 foot (30cm) above opening	6 inches (152mm) for appliances <10,000 Btuh (3kw), 12 inches (305mm) for appliances > 10,000 Btuh (3kw) and <100,000 Btuh (30kw), 36 inches (.9m) for appliances > 100,000 Btuh (30kw)
C =	Clearance to permanently closed window	* 12”	* 12”
D =	Vertical clearance to ventilated soffit located above the terminal within a horizontal distance of 2 feet (610 mm) from the center line of the terminal	* Equal to or greater than soffit depth.	* Equal to or greater than soffit depth.
E =	Clearance to unventilated soffit	* Equal to or greater than soffit depth.	* Equal to or greater than soffit depth.
F =	Clearance to outside corner	* No minimum to outside corner	* No minimum to outside corner
G =	Clearance to inside corner	*	*
H =	Clearance to each side of center line extended above meter / regulator assembly	* 3 feet (.9m) within a height 15 feet (4.5m) above the meter / regulator assembly	3 feet (.9m) within a height 15 feet (4.5m) above the meter / regulator assembly
I =	Clearance to service regulator vent outlet	* 3 feet (.9m)	3 feet (.9m)
J =	Clearance to non-mechanical air supply inlet to building or the combustion air inlet to any other appliance	4 feet (1.2 m) below or to side of opening; 1 foot (30 cm) above opening	6 inches (152mm) for appliances <10,000 Btuh (3kw), 12 inches (305mm) for appliances > 10,000 Btuh (3kw) and <100,000 Btuh (30kw), 36 inches (.9m) for appliances > 100,000 Btuh (30kw)
K =	Clearance to mechanical air supply inlet	3 feet (.9m) above if within 10 feet (3m) horizontally	6 feet (1.8m)
L =	Clearance above paved sidewalk or paved driveway located on public property	7 feet (2.1m)†	7 feet (2.1m)†
M =	Clearance under veranda, porch, deck or balcony	*12 inches (305mm)‡	12 inches (305mm)‡

[1] In accordance with the current ANSI Z223.1/NFPA 54 Natural Fuel Gas Code
[2] In accordance with the current CSA B149.1, Natural Gas and Propane Installation Code
† A vent shall not terminate directly above a sidewalk or paved driveway that is located between two single family dwellings and serves both dwellings.
‡ Permitted only if veranda, porch, deck or balcony is fully open on a minimum of two sides beneath the floor. Lennox recommends avoiding this location if possible.

*For clearances not specified in ANSI Z223.1/NFPA 54 or CSA B149.1, clearance will be in accordance with local installation codes and the requirements of the gas supplier and these installation instructions.”

NOTE - *This figure is intended to illustrate clearance requirement and does not serve as a substitute for locally adopted installation codes.*

FIGURE 29

VENT TERMINATION CLEARANCES FOR DIRECT VENT INSTALLATIONS IN THE US AND CANADA

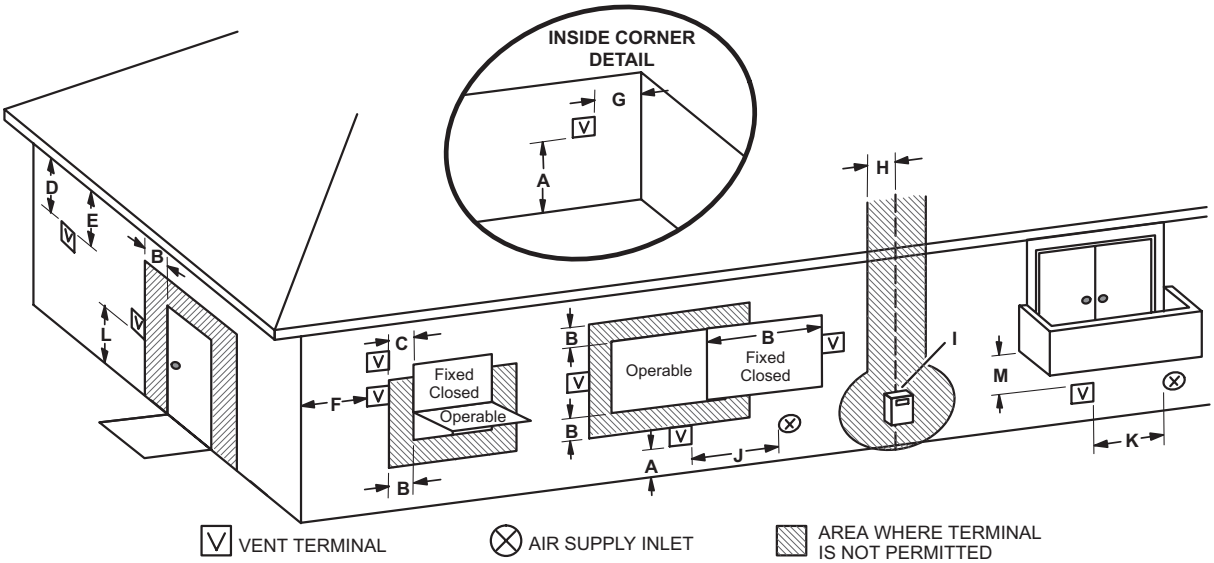

		US Installations[1]	Canadian Installations[2]
A =	Clearance above grade, veranda, porch, deck or balcony	12 inches (305mm) or 12 in. (305mm) above average snow accumulation.	12 inches (305mm) or 12 in. (305mm) above average snow accumulation.
B =	Clearance to window or door that may be opened	6 inches (152mm) for appliances <10,000 Btuh (3kw), 9 inches (228mm) for appliances > 10,000 Btuh (3kw) and <50,000 Btuh (15 kw), 12 inches (305mm) for appliances > 50,000 Btuh (15kw)	6 inches (152mm) for appliances <10,000 Btuh (3kw), 12 inches (305mm) for appliances > 10,000 Btuh (3kw) and <100,000 Btuh (30kw), 36 inches (.9m) for appliances > 100,000 Btuh (30kw)
C =	Clearance to permanently closed window	* 12”	* 12”
D =	Vertical clearance to ventilated soffit located above the terminal within a horizontal distance of 2 feet (610mm) from the center line of the terminal	* Equal to or greater than soffit depth	* Equal to or greater than soffit depth
E =	Clearance to unventilated soffit	* Equal to or greater than soffit depth	* Equal to or greater than soffit depth
F =	Clearance to outside corner	* No minimum to outside corner	* No minimum to outside corner
G =	Clearance to inside corner	*	*
H =	Clearance to each side of center line extended above meter / regulator assembly	3 feet (.9m) within a height 15 feet (4.5m) above the meter / regulator assembly	3 feet (.9m) within a height 15 feet (4.5m) above the meter / regulator assembly
I =	Clearance to service regulator vent outlet	* 3 feet (.9m)	3 feet (.9m)
J =	Clearance to non-mechanical air supply inlet to building or the combustion air inlet to any other appliance	6 inches (152mm) for appliances <10,000 Btuh (3kw), 9 inches (228mm) for appliances > 10,000 Btuh (3kw) and <50,000 Btuh (15 kw), 12 inches (305mm) for appliances > 50,000 Btuh (15kw)	6 inches (152mm) for appliances <10,000 Btuh (3kw), 12 inches (305mm) for appliances > 10,000 Btuh (3kw) and <100,000 Btuh (30kw), 36 inches (.9m) for appliances > 100,000 Btuh (30kw)
K =	Clearance to mechanical air supply inlet	3 feet (.9m) above if within 10 feet (3m) horizontally	6 feet (1.8m)
L =	Clearance above paved sidewalk or paved driveway located on public property	* 7 feet (2.1m)	7 feet (2.1m)†
M =	Clearance under veranda, porch, deck or balcony	*12 inches (305mm)‡	12 inches (305mm)‡

[1] In accordance with the current ANSI Z223.1/NFPA 54 Natural Fuel Gas Code

[2] In accordance with the current CSA B149.1, Natural Gas and Propane Installation Code

† A vent shall not terminate directly above a sidewalk or paved driveway that is located between two single family dwellings and serves both dwellings.

‡ Permitted only if veranda, porch, deck or balcony is fully open on a minimum of two sides beneath the floor. Lennox recommends avoiding this location if possible.

*For clearances not specified in ANSI Z223.1/NFPA 54 or CSA B149.1, clearance will be in accordance with local installation codes and the requirements of the gas supplier and these installation instructions.”

NOTE - *This figure is intended to illustrate clearance requirements and does not serve as a substitute for locally adopted installation codes.*

FIGURE 30

Details of Intake and Exhaust Piping Terminations for Direct Vent Installations

NOTE - *In Direct Vent installations, combustion air is taken from outdoors and flue gases are discharged to outdoors.*

NOTE - *Flue gas may be slightly acidic and may adversely affect some building materials. If any vent termination is used and the flue gasses may impinge on the building material, a corrosion-resistant shield (minimum 24 inches square) should be used to protect the wall surface. If the optional tee is used, the protective shield is recommended. The shield should be constructed using wood, plastic, sheet metal or other suitable material. All seams, joints, cracks, etc. in the affected area should be sealed using an appropriate sealant. See FIGURE 39.*

Intake and exhaust pipes may be routed either horizontally through an outside wall or vertically through the roof. In attic or closet installations, vertical termination through the roof is preferred. FIGURE 33 through FIGURE 38 show typical terminations.

1 - Intake and exhaust terminations are not required to be in the same pressure zone. You may exit the intake on one side of the structure and the exhaust on another side (FIGURE 31). You may exit the exhaust out the roof and the intake out the side of the structure (FIGURE 32).

2 - Intake and exhaust pipes should be placed as close together as possible at termination end (refer to illustrations). Maximum separation is 3” (76mm) on roof terminations and 6” (152mm) on side wall terminations.

NOTE - *When venting in different pressure zones, the maximum separation requirement of intake and exhaust pipe DOES NOT apply.*

3 - On roof terminations, the intake piping should terminate straight down using two 90° elbows (See FIGURE 33).

4 - Exhaust piping must terminate straight out or up as shown. A reducer may be required on the exhaust piping at the point where it exits the structure to improve he velocity of exhaust away from the intake piping. See TABLE 10.

TABLE 10

Exhaust Pipe Termination Size Reduction

ML193DFEK Model	Termination Pipe Size
*045, *070	1-1/2” (38mm)
*090	2” (51mm)
**ML193DFEK-045, -070 and -090 units with the flush mount termination must use the 1-1/2” accelerator supplied with the kit.*	

6 - On field supplied terminations, a minimum distance between the end of the exhaust pipe and the end of the intake pipe without a termination elbow is 8” and a minimum distance of 6” with a termination elbow. See FIGURE 39.

NOTE - *Care must be taken to avoid recirculation of exhaust back into intake pipe.*

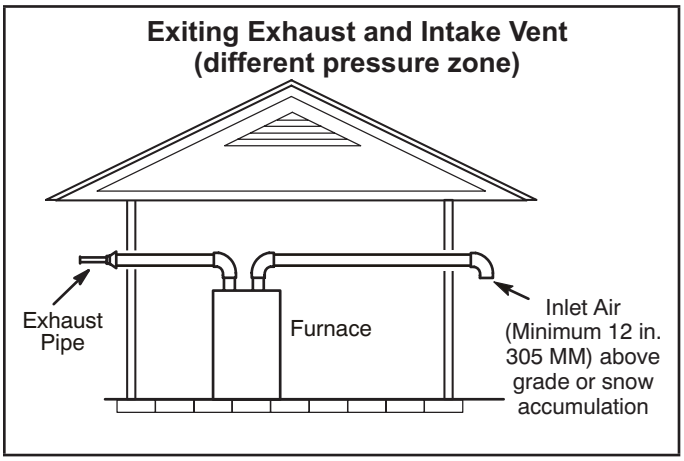

FIGURE 31

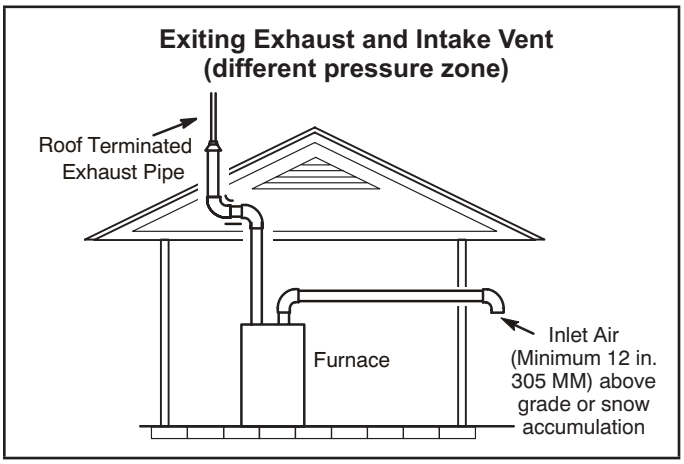

FIGURE 32

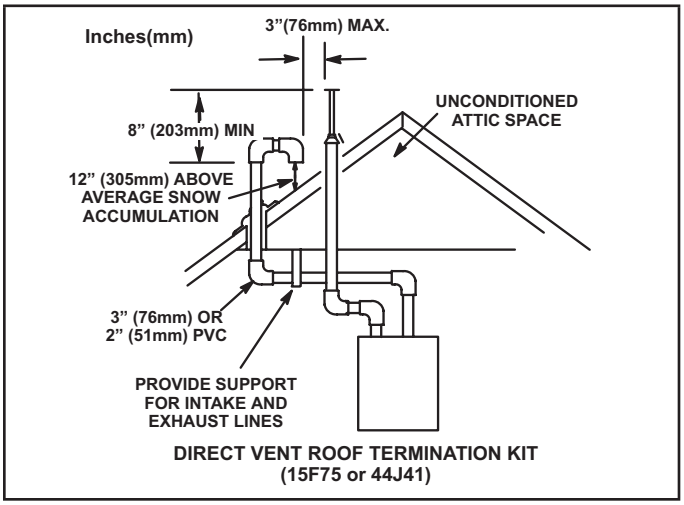

FIGURE 33

7 - If intake and exhaust piping must be run up a side wall to position above snow accumulation or other obstructions, piping must be supported. At least one bracket must be used within 6” from the top of the elbow and then every 24” (610mm) as shown in FIGURE 39, to prevent any movement in any direction. When exhaust and intake piping must be run up an outside wall, the exhaust piping must be terminated with pipe sized per TABLE 10.The intake piping may be equipped with a 90° elbow turndown. Using turndown will add 5 feet (1.5m) to the equivalent length of the pipe.

8 - A multiple furnace installation may use a group of up to four terminations assembled together horizontally, as shown in FIGURE 36.

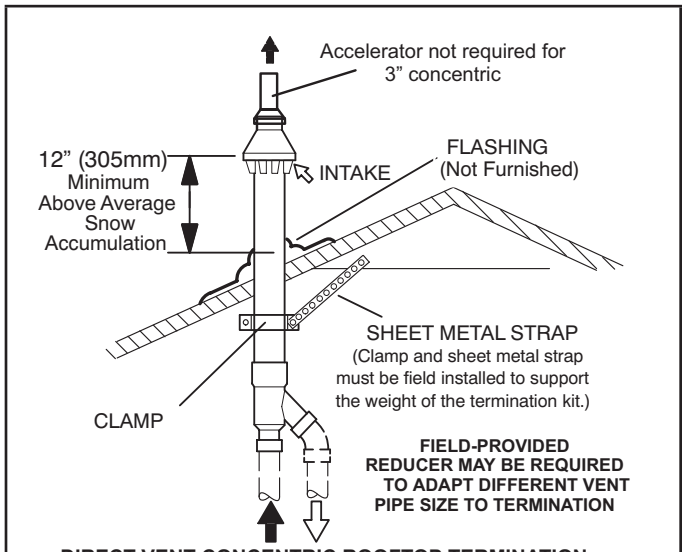

DIRECT VENT CONCENTRIC ROOFTOP TERMINATION
71M80, 69M29 or 60L46 (US)
44W92 or 44W93 (Canada)

FIGURE 34

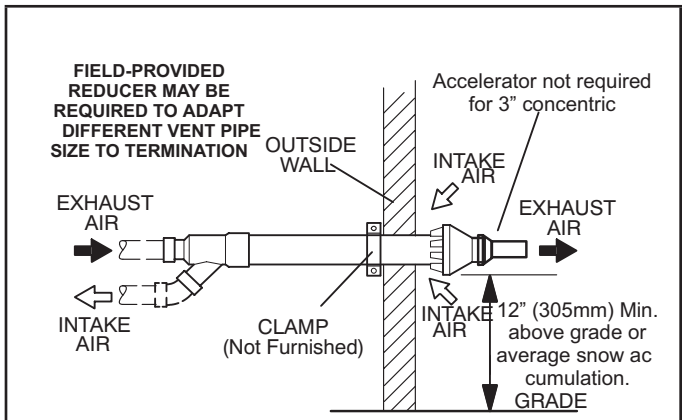

DIRECT VENT CONCENTRIC WALL TERMINATION
71M80, 69M29 or 60L46 (US)
44W92 or 44W93 (Canada)

FIGURE 35

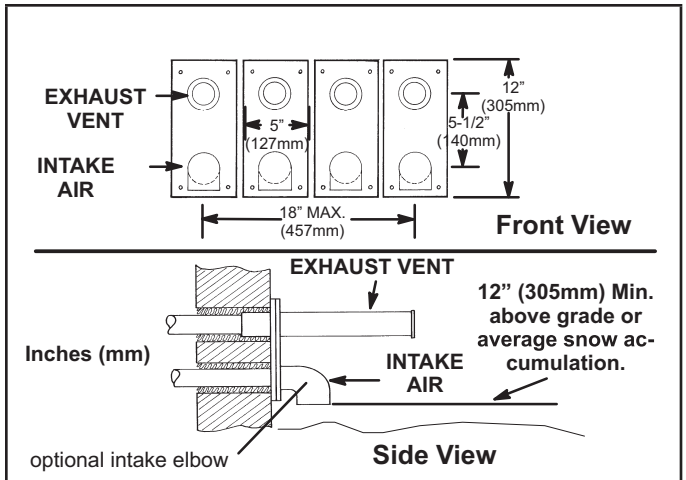

OPTIONAL VENT TERMINATION FOR MULTIPLE UNIT INSTALLATION OF DIRECT VENT WALL TERMINATION KIT (30G28 or 81J20)

FIGURE 36

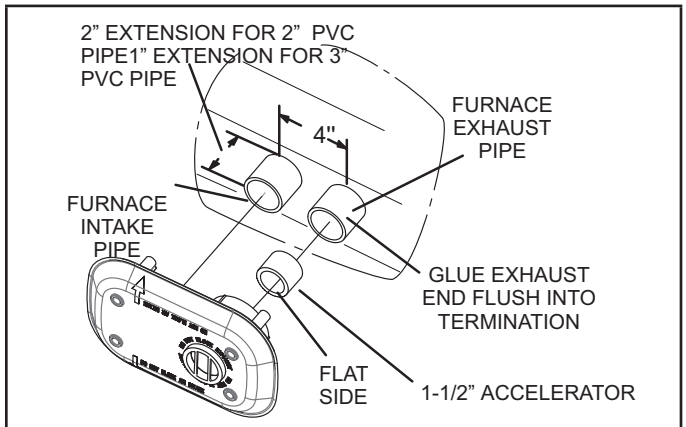

FLUSH-MOUNT SIDE WALL TERMINATION KIT
51W11 (US) or 51W12 (Canada)

FIGURE 37

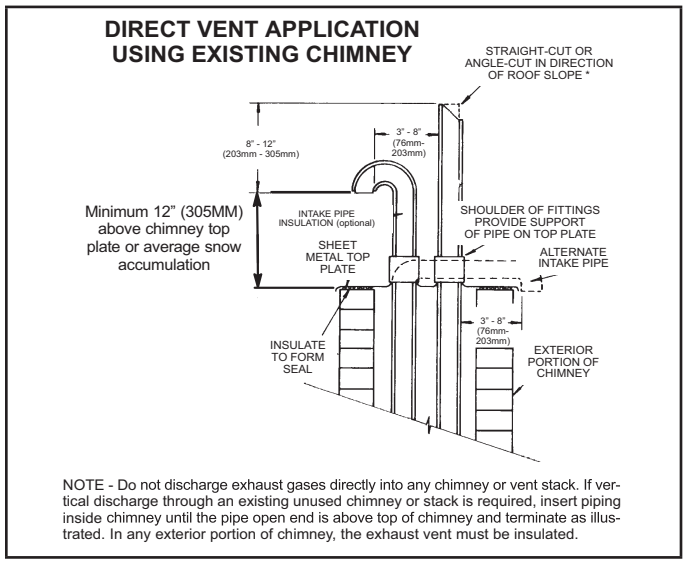

NOTE - Do not discharge exhaust gases directly into any chimney or vent stack. If vertical discharge through an existing unused chimney or stack is required, insert piping inside chimney until the pipe open end is above top of chimney and terminate as illustrated. In any exterior portion of chimney, the exhaust vent must be insulated.

FIGURE 38

FIELD FABRICATED WALL TERMINATION

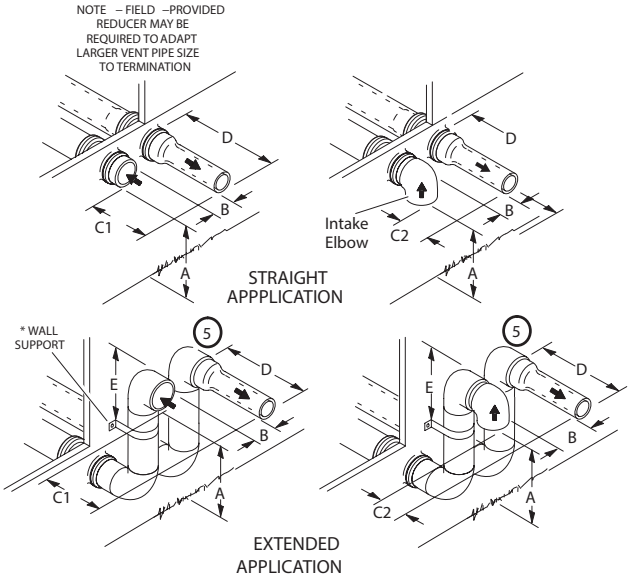

	2" (51mm) Vent Pipe	3" (76mm) Vent Pipe
A– Minimum clearance above grade or average snow accumulation	12" (305 mm)	12" (305 mm)
B– Maximum horizontal separation between intake and exhaust	6" (152 mm)	6" (152 mm)
C1 -Minimum from end of exhaust to inlet of intake	8" (203 mm)	8" (203 mm)
C2 -Minimum from end of exhaust to inlet of intake	6" (152 mm)	6" (152 mm)
D– Maximum exhaust pipe length	12" (305 mm)	20" (508 mm)
E– Maximum wall support distance from top of each pipe (intake/exhaust)	6" (152 mm)	6" (152 mm)

See maximum allowable venting tables for venting lengths with this arrangement.

* Use wall support every 24" (610 mm). Use two wall supports if extension is greater than 24" (610 mm) but less than 48" (1219 mm).

NOTE – One wall support must be within 6" (152 mm) from top of each pipe (intake and exhaust) to prevent movement in any direction.

ALTERNATE TERMINATIONS (TEE & FORTYFIVE DEGREE ELBOWS ONLY)

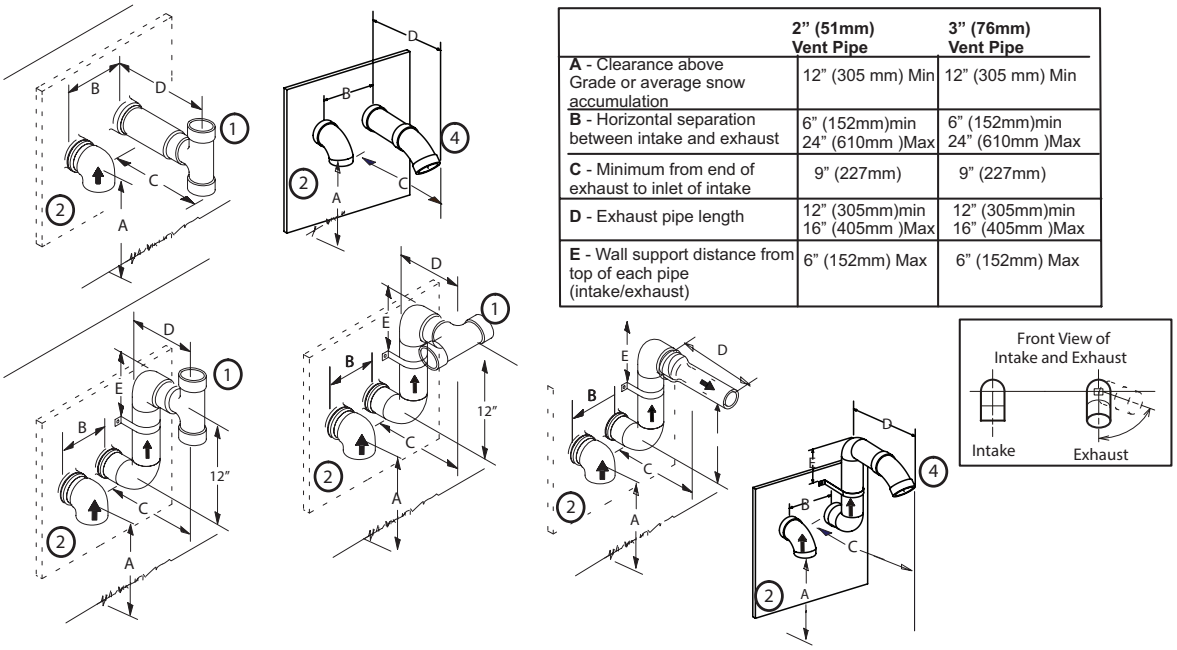

	2" (51mm) Vent Pipe	3" (76mm) Vent Pipe
A - Clearance above Grade or average snow accumulation	12" (305 mm) Min	12" (305 mm) Min
B - Horizontal separation between intake and exhaust	6" (152mm)min 24" (610mm)Max	6" (152mm)min 24" (610mm)Max
C - Minimum from end of exhaust to inlet of intake	9" (227mm)	9" (227mm)
D - Exhaust pipe length	12" (305mm)min 16" (405mm)Max	12" (305mm)min 16" (405mm)Max
E - Wall support distance from top of each pipe (intake/exhaust)	6" (152mm) Max	6" (152mm) Max

[1] The exhaust termination tee should be connected to the 2" or 3" PVC flue pipe as shown in the illustration. In horizontal tee applications there must be be a minimum of 3 ft away from covered patios or any living ares and cannot be within 3 ft of a window. Do not use an accelerator in applications that include an exhaust termination tee. The accelerator is not required.

[2] As required. Flue gas may be acidic and may adversely affect some building materials. If a side wall vent termination is used and flue gases will impinge on the building materials, a corrosion –resistant shield (24 inches square) should be used to protect the wall surface. If optional tee is used, the protective shield is recommended. The shield should be constructed using wood, sheet metal or other suitable material. All seams, joints, cracks, etc. in affected area, should be sealed using an appropriate sealant.

[3] Exhaust pipe 45 ° elbow can be rotated to the side away from the combustion air inlet to direct exhaust away from adjacent property. The exhaust must never be directed toward the combustion air inlet.

[4] Exhaust pipe can be rotated from the 12 o'clock position down to the 4 o' clock position

[5] Exhaust pipe in double snorkel applications can use a 45 as an option to the accelerator tip.

FIGURE 39

Details of Exhaust Piping Terminations for Non-Direct Vent Applications

Exhaust pipes may be routed either horizontally through an outside wall or vertically through the roof. In attic or closet installations, vertical termination through the roof is preferred. FIGURE 40 and FIGURE 41 show typical terminations.

1 - Exhaust piping must terminate straight out or up as shown. The termination pipe must be sized as listed in TABLE 10.The Specified pipe size ensures proper velocity required to move the exhaust gases away from the building.

2 - On field supplied terminations for side wall exit, exhaust piping may extend a maximum of 12 inches (305mm) for 2” PVC and 20 inches (508mm) for 3” (76mm) PVC beyond the outside wall.

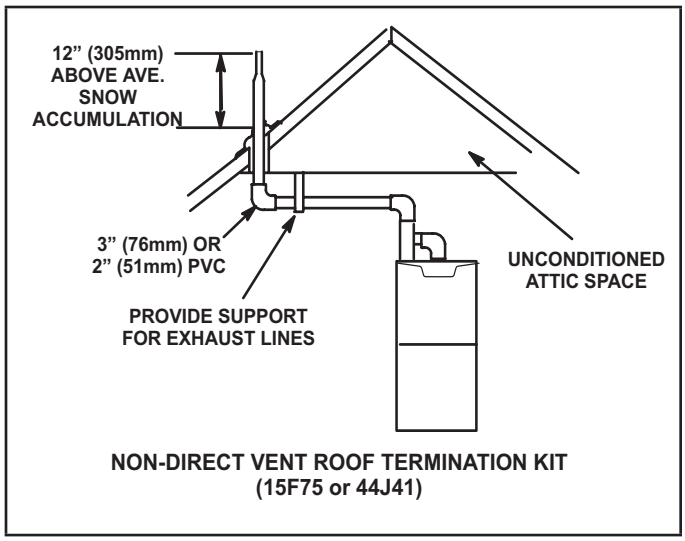

FIGURE 40

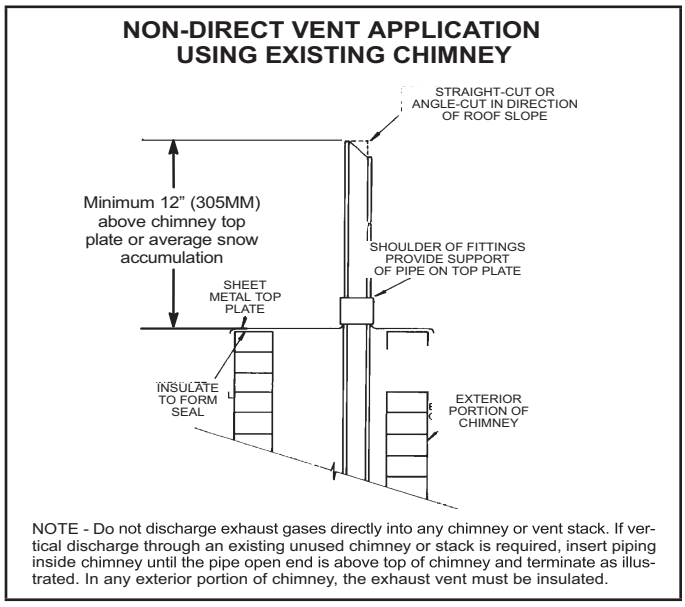

FIGURE 41

3 - If exhaust piping must be run up a side wall to position above snow accumulation or other obstructions, piping must be supported every 24 inches (610mm). When exhaust piping must be run up an outside wall, any reduction in exhaust pipe size must be done after the final elbow.

4 - Distance between exhaust pipe terminations on multiple furnaces must meet local codes.

Crawl Space and Extended Horizontal Venting

Lennox provides kit 51W18 to install 2” or 3” PVC exhaust piping through the floor joists and into the crawl space. See FIGURE 42.

This kit can also be used as a supplemental drain for installations with condensate run back in the vent pipe (ie. long horizontal runs, unconditioned spaces, etc.).

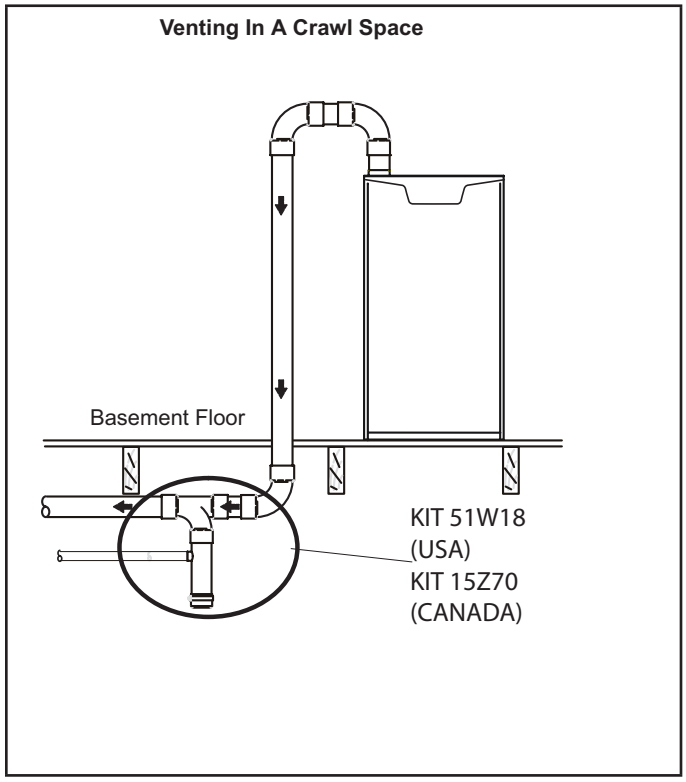

FIGURE 42

Condensate Piping

This unit is designed for either right- or left-side exit of condensate piping. Refer to FIGURE 43 and FIGURE 45 for condensate trap locations.

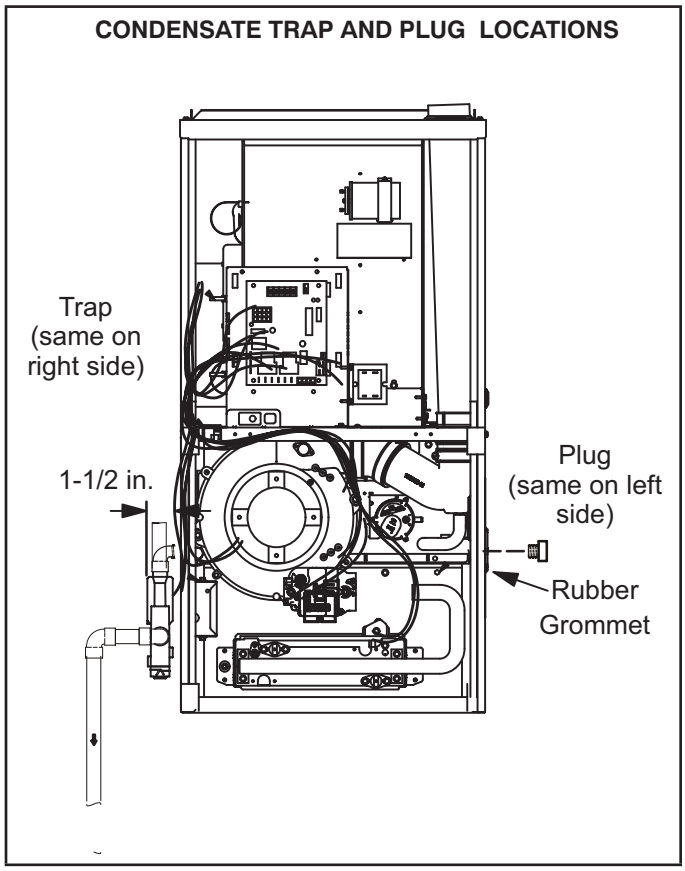

FIGURE 43

1 - Determine which side condensate piping will exit the unit, location of trap, field-provided fittings and length of PVC pipe required to reach available drain.

NOTE - *Do not remove the rubber grommet used to seal the cabinet on the side not used when installing the condensate trap.*

2 - Use a large flat head screw driver or a 1/2" drive socket extension and remove plug (figure 43) from the cold end header box at the appropriate location on the side of the unit. Install provided 3/4 NPT street elbow fitting into cold end header box. Use Teflon tape or appropriate pipe dope.

NOTE - *Cold end header box drain plugs are factory installed. Check the unused plug for tightness to prevent leakage.*

3 - Install the cap over the clean out opening at the base of the trap. Secure with clamp. See FIGURE 49.

4 - Install drain trap using appropriate PVC fittings, glue all joints. Glue the provided drain trap as shown in FIGURE 49. Route the condensate line to an open drain.

5 - FIGURE 46 shows the furnace and evaporator coil using a separate drain. If necessary, the condensate line from the furnace and evaporator coil can drain together. See FIGURE 47 and FIGURE 48. The field provided vent must be a minimum 1" to a maximum 2" length above the condensate drain outlet connection.

NOTE - *If necessary the condensate trap may be installed up to 5 feet away from the furnace. Piping from furnace must slope down a minimum of 1/4" per ft. toward trap.*

NOTE - *Appropriately sized tubing and barbed fitting may be used for condensate drain. Attach to the drain on the trap using a hose clamp. See FIGURE 44.*

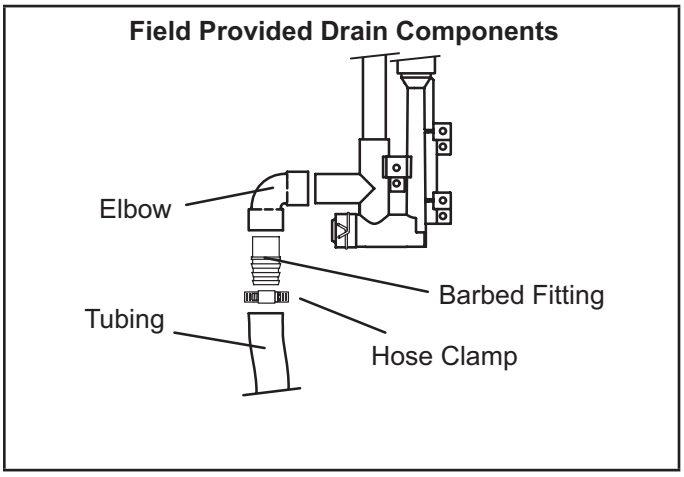

FIGURE 44

6 - If unit will be started immediately upon completion of installation, prime trap per procedure outlined in Unit Start-Up section.

Condensate line must slope downward away from the trap to drain. If drain level is above condensate trap, condensate pump must be used. Condensate drain line should be routed within the conditioned space to avoid freezing of condensate and blockage of drain line. If this is not possible, a heat cable kit may be used on the condensate trap and line. Heat cable kit is available from Lennox in various lengths; 6 ft. (1.8m) - kit no. 26K68 and 24 ft. (7.3m) - kit no. 26K69.

CONDENSATE TRAP LOCATION
(shown with right side exit of condensation)

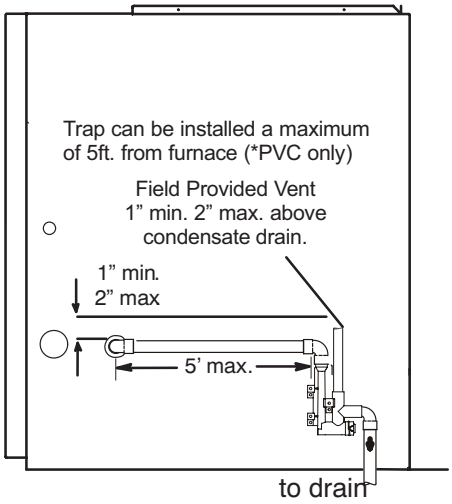

*Piping from furnace must slope down a minimum 1/4" per ft. toward trap

FIGURE 45

Furnace with Evaporator Coil Using a Separate Drain

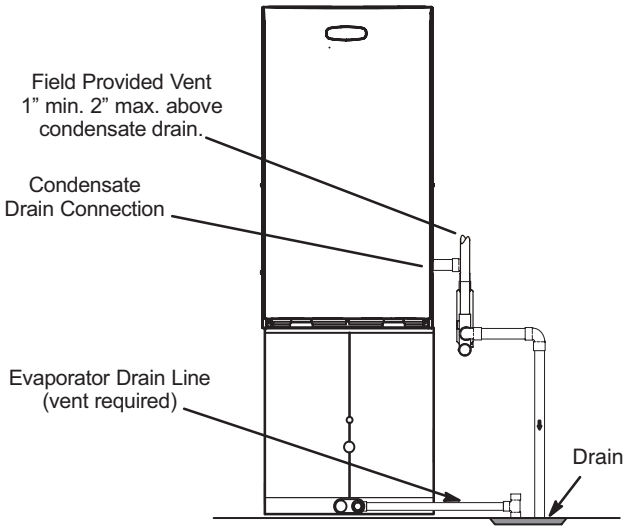

FIGURE 46

⚠ IMPORTANT

When combining the furnace and evaporator coil drains together, the A/C condensate drain outlet must be vented to relieve pressure in order for the furnace pressure switch to operate properly.

⚠ IMPORTANT

Do not use copper tubing or existing copper condensate lines for drain line.

Furnace with Evaporator Coil Using a Common Drain

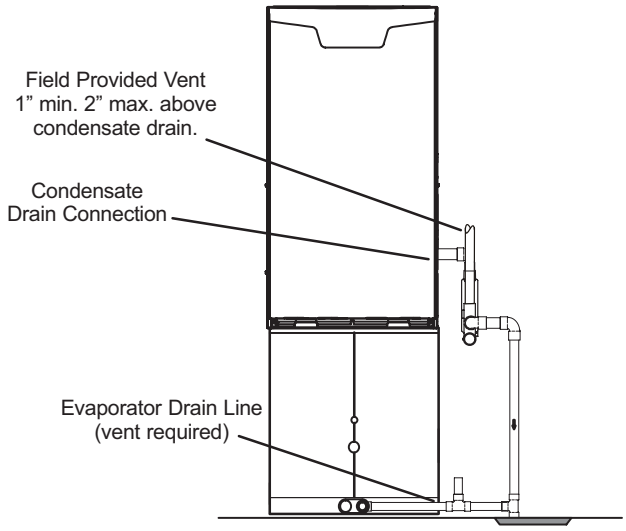

FIGURE 47

Condensate Trap With Optional Overflow Switch

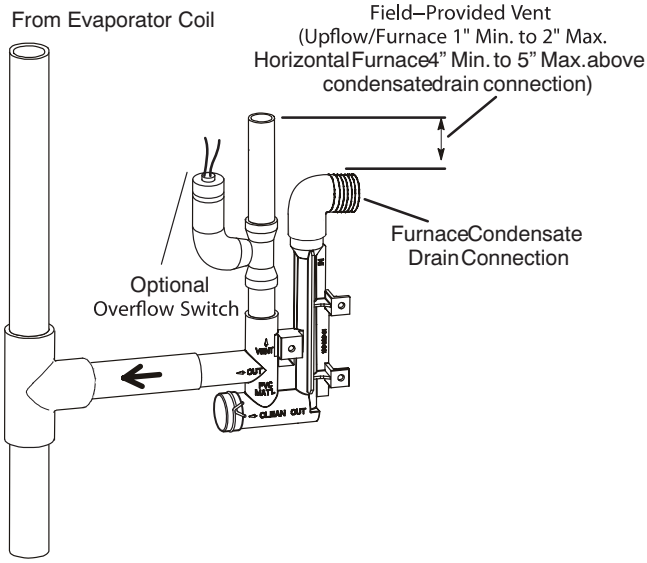

FIGURE 48

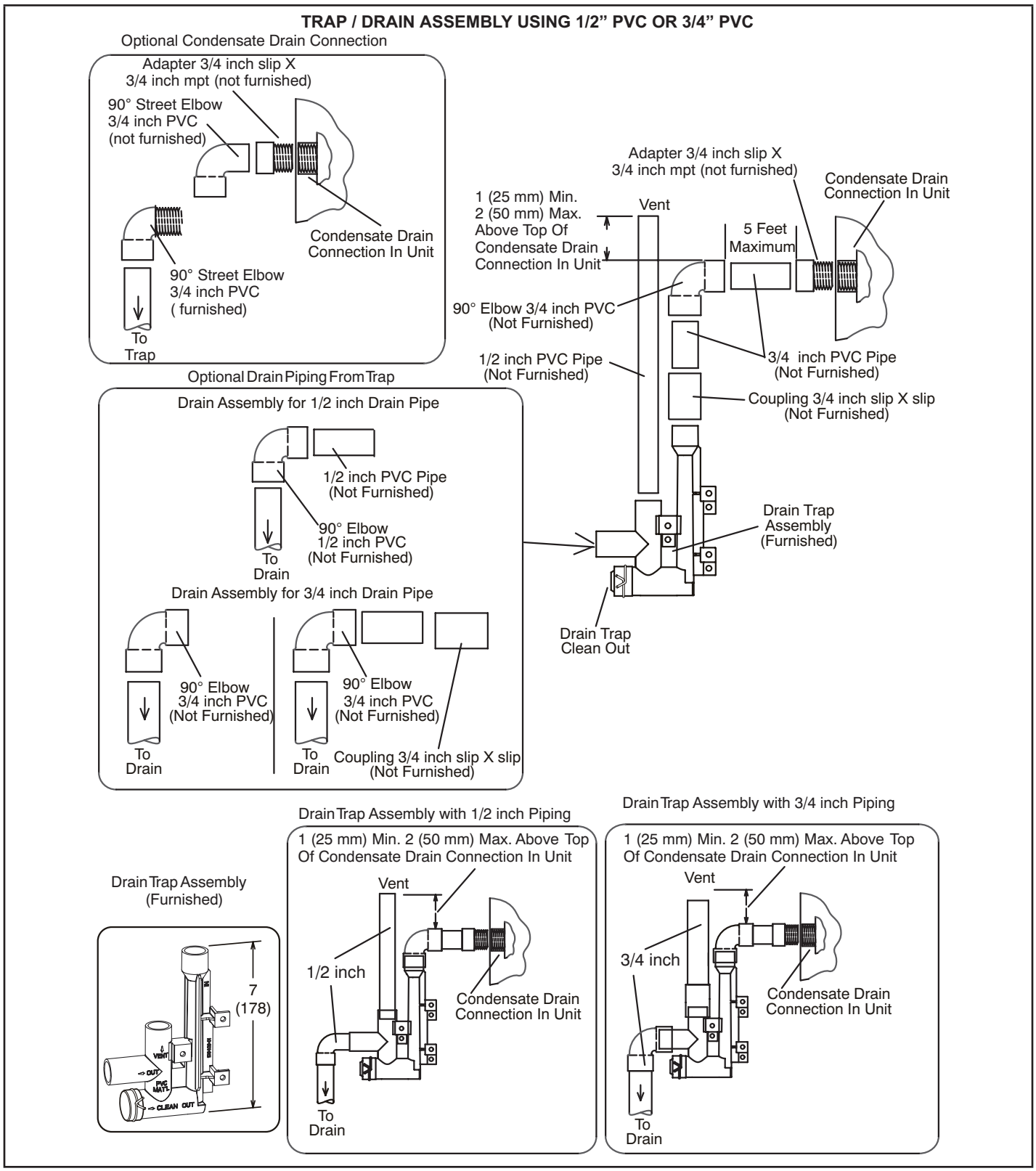
TRAP / DRAIN ASSEMBLY USING 1/2" PVC OR 3/4" PVC
Optional Condensate Drain Connection
Adapter 3/4 inch slip X
3/4 inch mpt (not furnished)
90° Street Elbow
3/4 inch PVC
(not furnished)
Condensate Drain
Connection In Unit
90° Street Elbow
3/4 inch PVC
(furnished)
To
Trap
Adapter 3/4 inch slip X
3/4 inch mpt (not furnished)
Condensate Drain
Connection In Unit
1 (25 mm) Min.
2 (50 mm) Max.
Above Top Of
Condensate Drain
Connection In Unit
Vent
5 Feet
Maximum
90° Elbow 3/4 inch PVC
(Not Furnished)
1/2 inch PVC Pipe
(Not Furnished)
3/4 inch PVC Pipe
(Not Furnished)
Coupling 3/4 inch slip X slip
(Not Furnished)
Optional Drain Piping From Trap
Drain Assembly for 1/2 inch Drain Pipe
1/2 inch PVC Pipe
(Not Furnished)
90° Elbow
1/2 inch PVC
(Not Furnished)
To
Drain
Drain Trap
Assembly
(Furnished)
Drain Assembly for 3/4 inch Drain Pipe
90° Elbow
3/4 inch PVC
(Not Furnished)
To
Drain
90° Elbow
3/4 inch PVC
(Not Furnished)
To
Drain
Coupling 3/4 inch slip X slip
(Not Furnished)
Drain Trap
Clean Out
Drain Trap Assembly
(Furnished)
7
(178)
VENT
OUT
PVC
MAT'L
CLEAN OUT
Drain Trap Assembly with 1/2 inch Piping
1 (25 mm) Min. 2 (50 mm) Max. Above Top
Of Condensate Drain Connection In Unit
Vent
1/2 inch
Condensate Drain
Connection In Unit
To
Drain
Drain Trap Assembly with 3/4 inch Piping
1 (25 mm) Min. 2 (50 mm) Max. Above Top
Of Condensate Drain Connection In Unit
Vent
3/4 inch
Condensate Drain
Connection In Unit
To
Drain

FIGURE 49

Gas Piping

⚠ CAUTION

If a flexible gas connector is required or allowed by the authority that has jurisdiction, black iron pipe shall be installed at the gas valve and extend outside the furnace cabinet. The flexible connector can then be added between the black iron pipe and the gas supply line.

⚠ WARNING

Do not over torque (800 in-lbs) or under torque (350 in-lbs) when attaching the gas piping to the gas valve.

1 - Gas piping may be routed into the unit through either the left- or right-hand side. Supply piping enters into the gas valve from the side of the valve as shown in FIGURE 51.Connect the gas supply piping into the gas valve. The maximum torque is 800 in lbs and minimum torque is 350 in lbs when attaching the gas piping to the gas valve.

2 - When connecting gas supply, factors such as length of run, number of fittings and furnace rating must be considered to avoid excessive pressure drop. TABLE 11 lists recommended pipe sizes for typical applications.

NOTE - *Use two wrenches when connecting gas piping to avoid transferring torque to the manifold.*

3 - Gas piping must not run in or through air ducts, clothes chutes, chimneys or gas vents, dumb waiters or elevator shafts. Center gas line through piping hole. Gas line should not touch side of unit. See FIGURE 51.

4 - Piping should be sloped 1/4 inch per 15 feet (6mm per 5.6m) upward toward the gas meter from the furnace. The piping must be supported at proper intervals, every 8 to 10 feet (2.44 to 3.05m), using suitable hangers or straps. Install a drip leg in vertical pipe runs to serve as a trap for sediment or condensate.

5 - A 1/8” N.P.T. plugged tap or pressure post is located on the gas valve to facilitate test gauge connection. See FIGURE 60.

6 - In some localities, codes may require installation of a manual main shut-off valve and union (furnished by installer) external to the unit. Union must be of the ground joint type.

⚠ IMPORTANT

Compounds used on threaded joints of gas piping must be resistant to the actions of liquified petroleum gases.

Leak Check

After gas piping is completed, carefully check all field-installed piping connections for gas leaks. Use a commercially available leak detecting solution specifically manufactured for leak detection. Never use an open flame to test for gas leaks.

The furnace must be isolated from the gas supply system by closing the individual manual shut-off valve during any gas supply system at pressures greater than or equal to ½ psig. (3.48 kPa, 14 inches w.c.). This furnace and its components are designed, manufactured and independently certified to comply with all applicable ANSI/CSA standards. A leak check of the furnace and its components is not required.

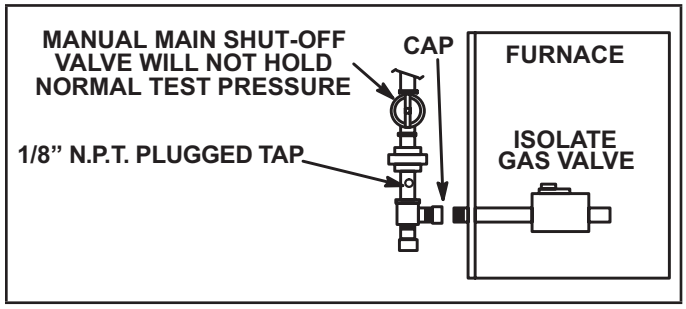

FIGURE 50

⚠ IMPORTANT

When testing pressure of gas lines, gas valve must be disconnected and isolated. See FIGURE 50. Gas valves can be damaged if subjected to pressures greater than 1/2 psig (3.48 kPa).

⚠ WARNING

FIRE OR EXPLOSION HAZARD

Failure to follow the safety warnings exactly could result in serious injury, death, or property damage. Never use an open flame to test for gas leaks. Check all connections using a commercially available soap solution made specifically for leak detection. Some soaps used for leak detection are corrosive to certain metals. Carefully rinse piping thoroughly after leak test has been completed.

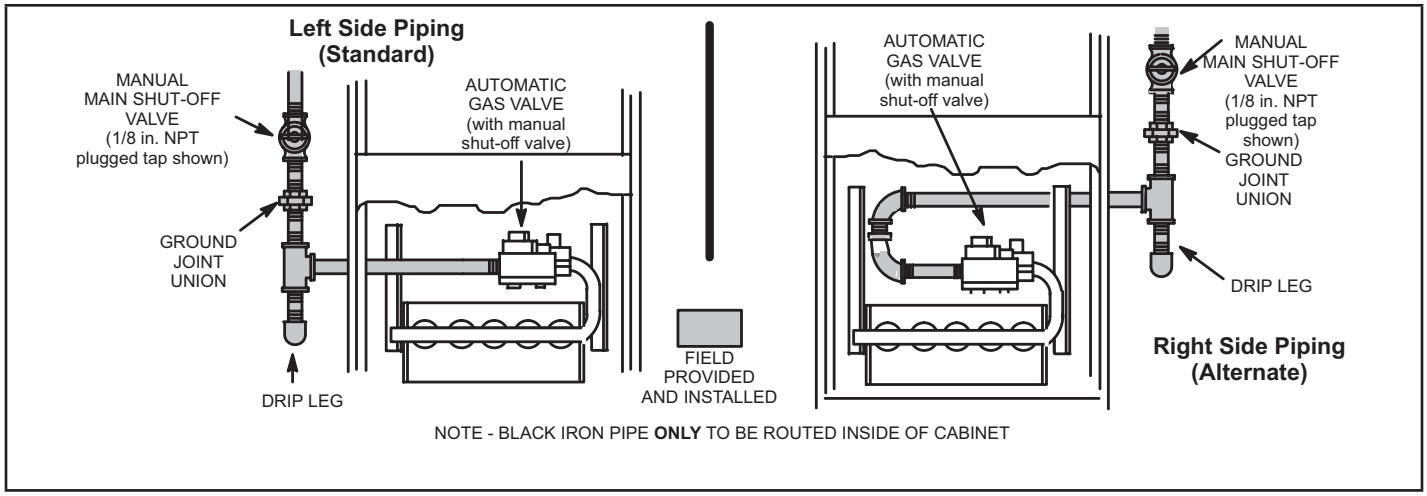

FIGURE 51

TABLE 11

Gas Pipe Capacity - ft3/hr (m3/hr)

Nominal Iron Pipe Size Inches (mm)	Internal Diameter inches (mm)	Length of Pipe - feet (m)									
		10 (3.048)	20 (6.096)	30 (9,144)	40 (12,192)	50 (15.240)	60 (18.288)	70 (21.336)	80 (24.384)	90 (27.432)	100 (30,480)
1/2 (12.7)	.622 (17.799)	172 (4.87)	118 (3.34)	95 (2.69)	81 (2.29)	72 (2.03)	65 (1.84)	60 (1.69)	56 (1.58)	52 (1.47)	50 (1.42)
3/4 (19.05)	.824 (20.930)	360 (10.19)	247 (7.000)	199 (5.63)	170 (4.81)	151 (4.23)	137 (3.87)	126 (3.56)	117 (3.31)	110 (3.11)	104 (2.94)
1 (25.4)	1.049 (26.645)	678 (19.19)	466 (13.19)	374 (10.59)	320 (9.06)	284 (8.04)	257 (7.27)	237 (6.71)	220 (6.23)	207 (5.86)	195 (5.52)
1-1/4 (31.75)	1.380 (35.052)	1350 (38.22)	957 (27.09)	768 (22.25)	657 (18.60)	583 (16.50)	528 (14.95)	486 (13.76)	452 (12.79)	424 (12.00)	400 (11.33)
1-1/2 (38.1)	1.610 (40.894)	2090 (59.18)	1430 (40.49)	1150 (32.56)	985 (27.89)	873 (24.72)	791 (22.39)	728 (20.61)	677 (19.17)	635 (17.98)	600 (17.00)
2 (50.8)	2.067 (52.502)	4020 (113.83)	2760 (78.15)	2220 (62.86)	1900 (53.80)	1680 (47.57)	1520 (43.04)	1400 (39.64)	1300 (36.81)	1220 (34.55)	1160 (32.844)
2-1/2 (63.5)	2.469 (67.713)	6400 (181.22)	4400 (124.59)	3530 (99.95)	3020 (85.51)	2680 (75.88)	2480 (70.22)	2230 (63.14)	2080 (58.89)	1950 (55.22)	1840 (52.10)
3 (76.2)	3.068 (77.927)	11300 (319.98)	7780 (220.30)	6250 (176.98)	5350 (151.49)	4740 (134.22)	4290 (121.47)	3950 (111.85)	3670 (103.92)	3450 (97.69)	3260 (92.31)

NOTE - *Capacity given in cubic feet (m3) of gas per hour and based on 0.60 specific gravity gas.*

Removal of the Furnace from Common Vent

In the event that an existing furnace is removed from a venting system commonly run with separate gas appliances, the venting system is likely to be too large to properly vent the remaining attached appliances. Conduct the following test while each appliance is operating and the other appliances (which are not operating) remain connected to the common venting system. If the venting system has been installed improperly, you must correct the system as indicated in the general venting requirements section.

⚠ WARNING

CARBON MONOXIDE POISONING HAZARD

Failure to follow the steps outlined below for each appliance connected to the venting system being placed into operation could result in carbon monoxide poisoning or death.

The following steps shall be followed for each appliance connected to the venting system being placed into operation, while all other appliances connected to the venting system are not in operation:

1 - Seal any unused openings in the common venting system.

2 - Inspect the venting system for proper size and horizontal pitch. Determine that there is no blockage, restriction, leakage, corrosion, or other deficiencies which could cause an unsafe condition.

3 - Close all building doors and windows and all doors between the space in which the appliances remaining connected to the common venting system are located and other spaces of the building. Turn on clothes dryers and any appliances not connected to the common venting system. Turn on any exhaust fans, such as range hoods and bathroom exhausts, so they will operate at maximum speed. Do not operate a summer exhaust fan. Close fireplace dampers.

4 - Follow the lighting instructions. Turn on the appliance that is being inspected. Adjust the thermostat so that the appliance operates continuously.

5 - After the main burner has operated for 5 minutes, test for leaks of flue gases at the draft hood relief opening. Use the flame of a match or candle.

6 - After determining that each appliance connected to the common venting system is venting properly, (step 3) return all doors, widows, exhaust fans, fireplace dampers, and any other gas-burning appliances to their previous mode of operation.

7 - If a venting problem is found during any of the preceding tests, the common venting system must be modified to correct the problem.

Resize the common venting system to the minimum vent pipe size determined by using the appropriate tables in Appendix G. (These are in the current standards of the National Fuel Gas Code ANSI Z223.1.

Electrical

⚠ IMPORTANT

When matching this gas furnace with zoning, dual fuel or other 24V accessories, It is recommended to replace the factory installed transformer with kit 27J32.

Kit 27J32 contains a 75VA transformer, so you do not overload the original 40VA transformer.

ELECTROSTATIC DISCHARGE (ESD)
Precautions and Procedures

⚠ CAUTION

Electrostatic discharge can affect electronic components. Take precautions to neutralize electrostatic charge by touching your hand and tools to metal prior to handling the control.

⚠ WARNING

Electric Shock Hazard. Can cause injury or death. Unit must be properly grounded in accordance with national and local codes.

⚠ WARNING

Fire Hazard. Use of aluminum wire with this product may result in a fire, causing property damage, severe injury or death. Use copper wire only with this product.

The unit is equipped with a field make-up box on the left hand side of the cabinet. A field-provided make-up box can be installed on the exterior of the right side of the furnace to facilitate installation. If the make-up box is moved to the right side, clip the wire ties that bundle the wires together and install on the outside of the cabinet. See FIGURE 52. The excess wire must be pulled into the blower compartment. Secure the excess wire to the existing harness to protect it from damage. Seal unused openings on left side with plugs removed from right side.

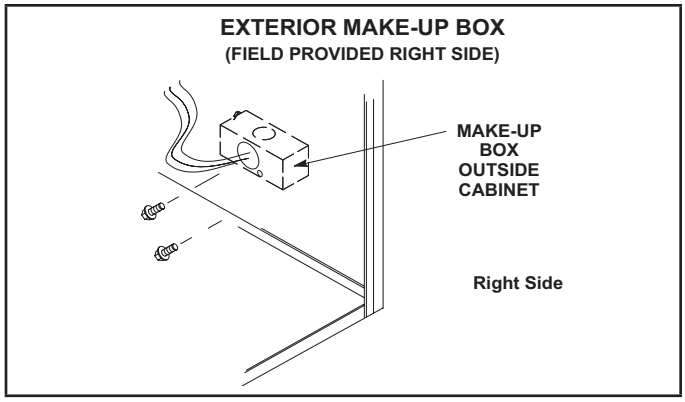

FIGURE 52

Refer to FIGURE 53 for field wiring, schematic wiring diagram and troubleshooting.

The power supply wiring must meet Class I restrictions. Protected by either a fuse or circuit breaker, select circuit protection and wire size according to unit nameplate.

⚠ CAUTION

Failure to use properly sized wiring and circuit breaker may result in property damage. Size wiring and circuit breaker(s) per Product Specifications bulletin (EHB) and unit rating plate.

NOTE - *Unit nameplate states maximum current draw. Maximum Over-Current Protection allowed is 15 AMP. Holes are on both sides of the furnace cabinet to facilitate wiring.*

Install a separate (properly sized) disconnect switch near the furnace so that power can be turned off for servicing. Before connecting the thermostat or the power wiring, check to make sure the wires will be long enough for servicing at a later date. Remove the blower access panel to check the length of the wire.

Complete the wiring connections to the equipment. Use the provided unitw wiring diagram and the field wiring diagram shown in FIGURE 53. Use 18-gauge wire or larger that is suitable for Class II rating for thermostat connections.

Electrically ground the unit according to local codes or, in the absence of local codes, according to the current National Electric Code (ANSI/NFPA No. 70) for the USA and current Canadian Electric Code part 1 (CSA standard C22.1) for Canada. A green ground wire is provided in the field make-up box.

NOTE - *The ML193DFEK furnace contains electronic components that are polarity sensitive. Make sure that the furnace is wired correctly and is properly grounded.*

Thermostat

Install the room thermostat according to the instructions provided with the thermostat. See FIGURE 53 for thermostat designations. If the furnace is being matched with a heat pump, refer to the thermostat installation instruction for set up.

Indoor Blower Speeds

Generator Use - Voltage Requirements

The following requirements must be kept in mind when specifying a generator for use with this equipment:

- The furnace requires 120 volts + 10% (Range: 108 volts to 132 volts)
- The furnace operates at 60 Hz + 5% (Range: 57 Hz to 63 Hz)
- The furnace integrated control requires both polarity and proper ground. Both polarity and proper grounding should be checked before attempting to operate the furnace on either permanent or temporary power Generator should have a wave form distortion of less than 5% THD (total harmonic distortion).

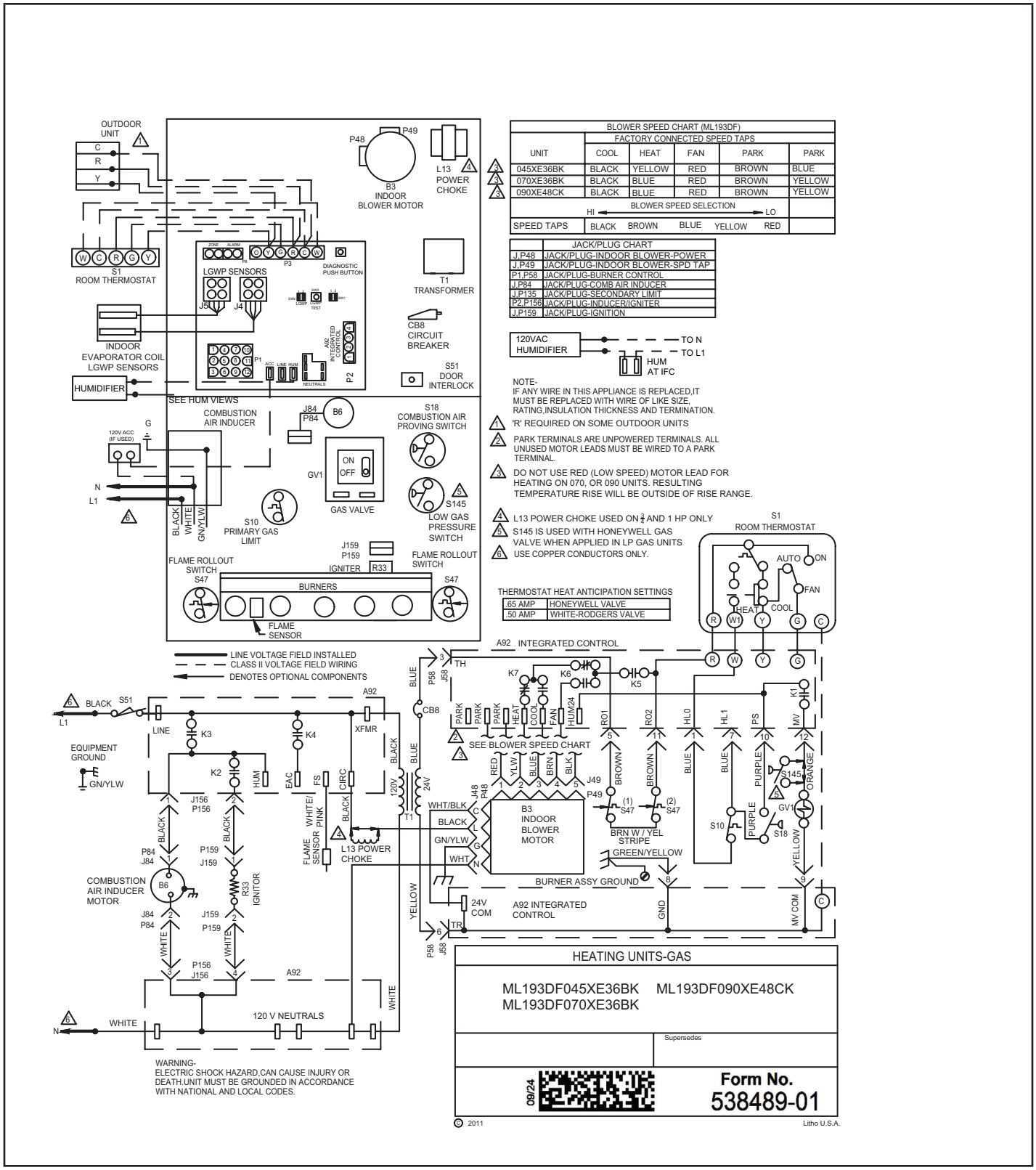

BLOWER SPEED CHART (ML193DF)					
	FACTORY CONNECTED SPEED TAPS				
UNIT	COOL	HEAT	FAN	PARK	PARK
045XE36BK	BLACK	YELLOW	RED	BROWN	BLUE
070XE36BK	BLACK	BLUE	RED	BROWN	YELLOW
090XE48CK	BLACK	BLUE	RED	BROWN	YELLOW
BLOWER SPEED SELECTION					
SPEED TAPS	BLACK	BROWN	BLUE	YELLOW	RED

JACK/PLUG CHART	
J,P48	JACK/PLUG-INDOOR BLOWER-POWER
J,P49	JACK/PLUG-INDOOR BLOWER-SPD TAP
P1,P58	JACK/PLUG-BURNER CONTROL
J,P84	JACK/PLUG-COMB AIR INDUCER
J,P135	JACK/PLUG-SECONDARY LIMIT
P2,P156	JACK/PLUG-INDUCER/IGNITER
J,P159	JACK/PLUG-IGNITION

120VAC HUMIDIFIER — TO N — TO L1 — HUM AT IFC

NOTE-
IF ANY WIRE IN THIS APPLIANCE IS REPLACED,IT MUST BE REPLACED WITH WIRE OF LIKE SIZE, RATING,INSULATION THICKNESS AND TERMINATION.

1. 'R' REQUIRED ON SOME OUTDOOR UNITS
2. PARK TERMINALS ARE UNPOWERED TERMINALS. ALL UNUSED MOTOR LEADS MUST BE WIRED TO A PARK TERMINAL.
3. DO NOT USE RED (LOW SPEED) MOTOR LEAD FOR HEATING ON 070, OR 090 UNITS. RESULTING TEMPERATURE RISE WILL BE OUTSIDE OF RISE RANGE.
4. L13 POWER CHOKE USED ON ¾ AND 1 HP ONLY
5. S145 IS USED WITH HONEYWELL GAS VALVE WHEN APPLIED IN LP GAS UNITS
6. USE COPPER CONDUCTORS ONLY.

THERMOSTAT HEAT ANTICIPATION SETTINGS	
.65 AMP	HONEYWELL VALVE
.50 AMP	WHITE-RODGERS VALVE

FIGURE 53

Integrated Control

Integrated Control DIP Switch Settings

ML193DFEK units are equipped with a single-stage integrated control. This control manages ignition timing, heating mode fan off delays and indoor blower speeds based on selections made using the control dip switches and jumpers. The control includes an internal watchguard feature which automatically resets the ignition control when it has been locked out. After one hour of continuous thermostat demand for heat, the watchguard will break and remake thermostat demand to the furnace and automatically reset the control to relight the furnace.

Accessory Terminals

One line voltage “ACC” 1/4” spade terminal is provided on the furnace integrated control. See FIGURE 56 for integrated control configuration. This terminal is energized when the indoor blower is operating. Any accessory rated up to one amp can be connected to this terminal with the neutral leg of the circuit being connected to one of the provided neutral terminals. If an accessory rated at greater than one amp is connected to this terminal, it is necessary to use an external relay.

One line voltage “HUM” 1/4” spade terminal is provided on the furnace integrated control. See FIGURE 56 for integrated control configuration. This terminal is energized in the heating mode when the combustion air inducer is operating. Any humidifier rated up to one amp can be connected to this terminal with the neutral leg of the circuit being connected to one of the provided neutral terminals. If a humidifier rated at greater than one amp is connected to this terminal, it is necessary to use an external relay.

One 24V ”H” 1/4” spade terminal is provided on the furnace integrated control. See FIGURE 56 for integrated control configuration. The terminal is energized in the heating mode when the combustion air inducer is operating and the pressure switch is closed. Any humidifier rated up to 0.5 amp can be connected to this terminal with the ground leg of the circuit connected to ground or the ”C” terminal.

Indoor Blower Operation DIP Switch Settings

The heat fan-on time of 30 seconds is not adjustable The heat fan-off delay (amount of time that the blower operates after the heat demand has been satisfied) may be adjusted by changing the two position dip switch on the integerated control, to one of four slections. Blower off delay is factory set at 120 seconds. For other blower off delay settings, please refer to the following chart:

Blower Delay Select		
	SW1-1	SW1-2
90	OFF	ON
120	OFF	OFF
180	ON	OFF
210	ON	ON
Factory Setting is 120		

ON BOARD LINKS AND DIAGNOSTIC PUSH BUTTON

See FIGURE 54 and FIGURE 55

⚠ IMPORTANT

Carefully review all configuration information provided. Failure to properly set DIP switches, jumpers and on-board links can result in improper operation!

On-Board Link W951 Heat Pump (R to O)

On-board link W951 is a clippable connection between terminals R and O on the integrated control. W951 must be cut when the furnace is installed in applications which include a heat pump unit and a thermostat which features dual fuel use. If the link is left intact, terminal “O” will remain energized eliminating the HEAT MODE in the heat pump.

Diagnostic Push Button

The diagnostic push button is located adjacent to the seven-segment diagnostic LED. This button is used to enable the Error Code Recall “E” mode and the Flame Signal “F” mode. Press the button and hold it to cycle through a menu of options. Every five seconds a new menu item will be displayed. When the button is released, the displayed item will be selected. Once all items in the menu have been displayed, the menu resumes from the beginning until the button is released.

Thermostat	On Board Links Must NOT Be Cut To Select AC ON System Options	Wiring Connections
Heat / Cool .	DO NOT CUT ANY ON-BOARD LINKS CUT FOR OPTION SELECTION W951 HEAT PUMP	S1 T'STAT — FURNACE TERM. STRIP — OUTDOOR UNIT W — W R — R G — G C — C — C Y — Y — Y

FIGURE 54

Thermostat	On Board Links Must Be Cut To Select Heat Pump Options	Wiring Connections
Dual Fuel Single Stage Heat Pump ComfortSense thermostat w/ dual fuel capa-bilities	CUT ON-BOARD LINK W951 HEAT PUMP CUT FOR OPTION SELECTION W951 HEAT PUMP	T'STAT — FURNACE TERM. STRIP — HEAT PUMP R — R — R 67M41* W — W — W O — O — O Y — Y — Y G — G C — C — C

Connect W to W ONLY if using defrost tempering kit 67M41

FIGURE 55

Single Stage, Constant, Torque, Non-Communicating
107792-01

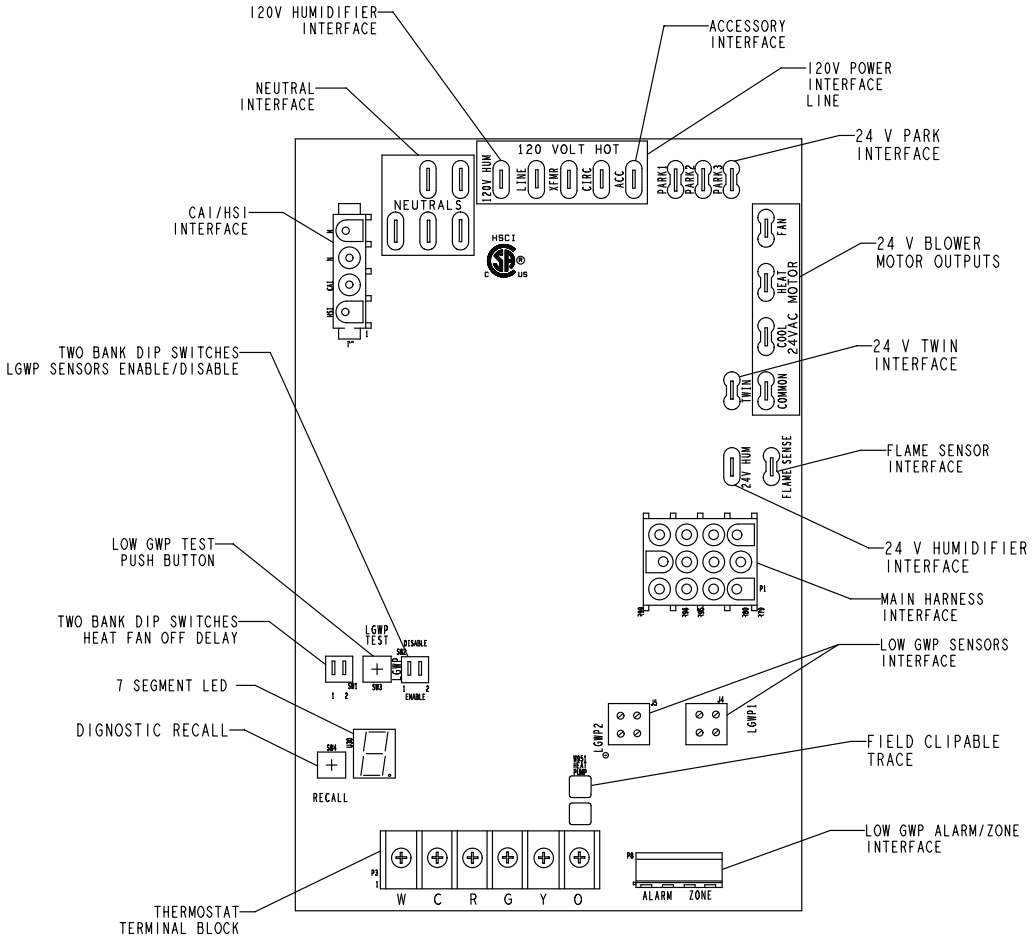

FIGURE 56

TABLE 12

1/4” QUICK CONNECT TERMINALS	
120V HUM	POWER FOR HUMIDIFIER (120 VAC
LINE	INCOMING POWER LINE (120 VAC)
XFMR	TRANSFORMER PRIMARY (120 VAC)
CIRC	INDOOR BLOWER MOTOR (120 VAC)
ACC	ACCESSORY(120 VAC)
24V HUM	HUMIDIFIER (24 VAC)
NEUTRALS	NEUTRAL (5)
3/16” QUICK CONNECT TERMINALS	
COOL	COOL SPEED TAP FROM INDOOR BLOWER MOTOR (24 VAC)
HEAT	HEAT SPEED TAP FROM INDOOR BLOWER MOTOR (24 VAC)
FAN	CONTINUOUS FAN SPEED TAP FROM INDOOR BLOWER MOTOR (24 VAC)
FLAME SENSE	FLAME SENSOR ELECTRODE (120 VAC)
COMMON	COMMON (24 VAC)
TWIN	24V TWINNING COMMUNICATION
PARK	3 TERMINALS TO PARK UNUSED MOTOR SPEED TAPS

TABLE 13

THERMOSTAT INPUT TERMINALS	
W	HEAT
C	COMMON GROUND
R	24V AC
G	FAN
Y	COOL
O	REVERSING VALVE (when W951 is clipped)

TABLE 14

LOW GWP INTERFACE	
LGWP1	LOW GWP SENSOR #1 INTERFACE
LGWP2	LOW GWP SENSOR # 2 INTERFACE
ALARM	INTERFACE TO LOW GWP LEAK AUDIBLE ALARM (DRY CONTACT)
ZONE	INTERFACE TO ZONING CONTROL (DRY CONTACT)
LGWP TEST	PUSH BUTTON TO TEST LOW GWP FUNCTIONALITY

Diagnostic LED (FIGURE 56)

The seven-segment diagnostic LED displays operating status, target airflow, error codes and other information.

Diagnostic Push Button (FIGURE 56)

The diagnostic push button is located adjacent to the seven- segment diagnostic LED. This button is used to enable the Error Code Recall “E” mode and the Flame Signal “F” mode. Press the button and hold it to cycle through a menu of options. Every five seconds a new menu item will be displayed. When the button is released, the displayed item will be selected. Once all items in the menu have been displayed, the menu resumes from the beginning until the button is released

Error Code Recall Mode

Select ”E” from the menu to access the most recent 10 error codes. Select “c” from the Error Code Recall menu to clear all error codes. Button must be pressed a second time while “c” is flashing to confirm command to delete codes. Press the button until a solid “≡” is displayed to exit the Error Code Recall mode.

Flame Signal Mode

Select ”F” from the menu to access the flame signal mode. The integrated control will display the flame current on 7 segment LED in in micro amps (uA).

Flame signal mode is exited after the following:

Power is reset

Pressing and holding push button until 3 horizontal lines “≡” are displayed

10 minutes of entering the flame sense mode.

Integrated Diagnostic Codes/Status of Equipment

Code	Diagnostic Codes/Status of Equipment
A	Indoor Blower Operation: Continuous Fan only mode
dF	Defrost mode
.	Idle mode (Decimal blinks at 1 Hertz -- 0.5 second ON, 0.5 second OFF).
C	Cooling stage (1 second ON, 0.5 second OFF) 1 or 2 displayed / Pause / Repeat codes.
d	Dehumidification mode (1 second ON, 1 second OFF) / Pause / Repeat Codes).
H	Gas Heat Stage (1 second ON, 0.5 second OFF) 1 or 2 displayed / Pause / Repeat codes. Blinking during ignition.
h	Heat pump stage.
* No change implies the display will continue to show whatever is currently being displayed for normal operation (blinking decimal, active error code, heat state, etc.)	

Code	Diagnostic Codes/Status of Equipment	Action Required to Clear and Recover
E000	No error in memory	No active fault exists, or all faults have been cleared
E106	Twin Communication Fault	This may indicate: 1) The power is removed from one furnace and not the other or/and 2) The 24 VAC supply to the twins are not in phase
E110	Low line voltage.	Line Voltage Low (Voltage lower than nameplate rating). Check power line voltage and correct. Alarm clears 5 seconds after fault recovered.
E111	Line voltage polarity reversed.	Reverse line power voltage wiring. System resumes normal operation 5 seconds after fault recovered.
E112	Ground not detected.	System shuts down. Provide proper earth ground. System resumes normal operation 5 seconds after fault recovered.
E113	High line voltage.	Line Voltage High (Voltage higher than nameplate rating). Provide power voltage within proper range. System resumes normal operation 5 seconds after fault recovered.
E114	Line voltage frequency out-of-range.	No 60 Hertz Power. Check voltage and line power frequency. Correct voltage and frequency problems. System resumes normal operation 5 seconds after fault recovered.
E115	Low 24V - Control will restart if the error recovers.	24-Volt Power Low (Range is 18 to 30 volts). Check and correct voltage. Check for additional power-robbing equipment connected to system. May require installation of larger VA transformer to be installed in furnace / air handler. Clears after fault recovered.
E117	Poor ground detected (Warning only).	Provide proper grounding for unit. Check for proper earth ground to the system. Warning only will clear 30 seconds after fault recovered.

Code	Diagnostic Codes/Status of Equipment	Action Required to Clear and Recover
E125	Control failed self-check, internal error, failed hardware. Will restart if error recovers. Integrated control not communicating. Covers hardware errors (flame sense circuit faults, pin shorts, etc.).	Hardware problem on the control. Cycle power on control. Replace if problem prevents service and is persistent. Critical alert. Cleared 300 seconds after fault recovered.
E150	Refrigerant Leak detected	This may indicate the presence of a leak at or in the indoor unit coil of the equipment, that will need to be repaired for proper and safe system operation. Additionally, it may indicate that proper refrigerant charge will need to be verified. This fault cannot be cleared while the refrigerant detection system sensor is reporting the presence of a leak
E151	Refrigerant Leak Detector Sensor #1 fault	The refrigerant detection sensor #1 in the unit is reporting an issue that prevents it from functioning properly, and replacement of the sensor may be necessary. This fault clears when the sensor no longer reports the presence of a fault condition.
E152	Refrigerant Leak Detector Sensor #2 fault	The refrigerant detection sensor #2 in the unit is reporting an issue that prevents it from functioning properly, and replacement of the sensor may be necessary. This fault clears when the sensor no longer reports the presence of a fault condition.
E154	Refrigerant Leak Detector Sensor #1 Communication lost or invalid sensor dip switch configuration (Disable/Enable)	There may be an issue with the wiring harness connecting the sensor #1 to the furnace control board, either with the wiring itself or with the connector. Check the wiring and the connector for damage or improper connectivity. Check the sensor for damage or obstruction on the harness plug. This fault clears when communications with the sensor has been reestablished, but blower latches for a minimum of 5 minutes. Retest of the presence of fault can be effected by pressing the Low GWP test button on the furnace unit control board. This may also indicate incorrect Low GWP dip switch settings. Please refer to installation instructions.
E155	Refrigerant Leak Detector Sensor #2 Communication lost	There may be an issue with the wiring harness connecting the sensor #2 to the furnace control board, either with the wiring itself or with the connector. Check the wiring and the connector for damage or improper connectivity. Check the sensor for damage or obstruction on the harness plug. This fault clears when communications with the sensor has been reestablished, but blower latches for a minimum of 5 minutes. Retest of the presence of fault can be effected by pressing the Low GWP test button on the furnace unit control board
E160	Refrigerant Leak Detector Sensor #1 type incorrect	The sensor #1 is of a type not suitable for use in the application. Replace the sensor with a Lennox approved replacement part. This fault clears when a sensor suitable for the application is detected by the furnace control board, but blower will latch for a minimum of 5 minutes. Retest of the presence of the fault can be effected by pressing the Low GWP test button on the furnace unit control board.
E161	Refrigerant Leak Detector Sensor #2 type incorrect	The sensor #2 is of a type not suitable for use in the application. Replace the sensor with a Lennox approved replacement part. This fault clears when a sensor suitable for the application is detected by the furnace control board, but blower will latch for a minimum of 5 minutes. Retest of the presence of the fault can be effected by pressing the Low GWP test button on the furnace unit control board.
E163	Furnace Control Board Failure	There is an issue with the furnace control board, preventing the furnace from operating properly. This may require the replacement of the indoor unit control board. This fault clears when the furnace controller operates normally.

Code	Diagnostic Codes/Status of Equipment	Action Required to Clear and Recover
E164	Low GWP Test	Low GWP Test mode activates by manually engaging Low GWP test button. Normal operations resumes and code clears automatically after 1-minute
E200	Hard lockout - Rollout circuit open or previously open.	Correct cause of rollout trip, or replace flame rollout switch. Test furnace operation. Cleared after fault recovered.
E204	Gas valve mis-wired.	Check gas valve operation and wiring. Clears when repaired.
E223	Pressure switch failed open.	Check pressure (inches w.c.) of pressure switch closing on heat call. Measure operating pressure (inches w.c.). Inspect vent and combustion air inducer for correct operation and restriction. Resumes normal operation after fault is cleared.
E224	Pressure switch failed closed.	Check pressure (inches w.c.) of pressure switch closing on heat call. Measure operating pressure (inches w.c.). Inspect vent and combustion air inducer for correct operation and restriction. Resumes normal operation after fault is cleared.
E227	Pressure switch open during trial for ignition or run mode.	Check pressure (inches w.c.) of pressure switch closing on heat call. Measure operating pressure (inches w.c.). Inspect vent and combustion air inducer for correct operation and restriction. Resumes normal operation after fault is cleared.
E240	Low flame current - Run mode.	Check micro-amperes of flame sensor using control diagnostics or field-installed mode. Clean or replace sensor. Measure voltage of neutral to ground to ensure good unit ground. Alert clears after current heat call has been completed. See TABLE 25 for flame signal.
E241	Flame sensed out of sequence - Flame still present.	Shut off gas. Check for gas valve leak. Replace, if necessary. Alert clears when fault is recovered.
E250	Limit switch circuit open.	Check for proper firing rate on furnace. Ensure there is no blockage in heater. Check for proper air flow. If limit not closed within 3 minutes, unit will go into 1-hour soft lockout. Resumes normal operation after fault is cleared.
E270	Soft lockout - Exceeded maximum number of retries. No flame current sensed.	Check for proper gas flow. Ensure that ignitor is lighting burner. Check flame sensor current. Clears when heat call finishes successfully.
E271	Soft lockout - Exceeded maximum number of retries. Last retry failed due to the pressure switch opening.	Check pressure (inches w.c.) of pressure switch closing on heat call. Measure operating pressure (inches w.c.). Inspect vent and combustion air inducer for correct operation and restriction. Clears when heat call finishes successfully.
E272	Soft lockout - Exceeded maximum number of recycles. Last recycle due to the pressure switch opening.	Check operation of low pressure switch to see if it is stuck closed on heat call. Check pressure (inches w.c.) of pressure switch closing on heat call. Measure operating pressure (inches w.c.). Inspect vent and combustion air inducer for correct operation and restriction. Clears when heat call finishes successfully.
E273	Soft lockout - Exceeded maximum number of recycles. Last recycle due to flame failure.	Check micro-amperes of flame sensor using control diagnostics or field-installed mode. Clean or replace sensor. Measure voltage of neutral to ground to ensure good unit ground. Clears when heat call finishes successfully.
E274	Soft lockout - Exceeded maximum number of recycles. Last recycle failed due to the limit circuit opening or limit remained open longer than 3 minutes.	Shut down system. 1-hour soft lockout. Check firing rate and air flow. Check for blockage. Clears when heat call finishes successfully.
E275	Soft lockout - Flame sensed out of sequence. Flame signal is gone.	Shut off gas. Check for gas valve leak. 1-hour soft lockout. Clears when flame has been proven stable.
E290	Ignitor circuit fault - Failed ignitor or triggering circuitry.	Measure resistance of hot surface ignitor. Replace if open or not within specifications. 1-hour soft lockout. Clears when flame has been proven stable.
E390	Low GWP Relay Stuck	This indicates an issue with the Low GWP relay in the furnace control. This may require the replacement of the indoor unit control board. This fault clears when the relay operates normally.

Indoor Blower Speeds

1 - When the thermostat is set to “FAN ON,” the indoor blower will run continuously on the (FAN) speed when there is no cooling or heating demand.

2 - When the ML193DFEK is running in the heating mode, the indoor blower will run on the heating speed (HEAT).

3 - When there is a cooling demand, the indoor blower will run on the cooling speed (COOL).

TABLE 15

Allowable Heating Speeds					
ML193DFEK Model	Red	Yellow	Blue	Brown	Black
-045	Allowed	Factory Setting	Allowed	Allowed	Not Allowed
-070	Not Allowed	Allowed	Factory Setting		
-090					

TABLE 16

Allowable Circulation Speeds					
Model Number	Red	Yellow	Blue	Brown	Black
All Models	Factory Setting	Not Allowed	Not Allowed	Not Allowed	Not Allowed

Twinning Two ML193DFEK Furnaces

The control board in this furnace is equipped with a provision to ”twin” (interconnect) two(2) adjacent furnaces with a common plenum such that they operate as one (1) large unit.

When twinned, the circulating blower speeds are synchronized between the furnaces. If either furnace has a need to run the blower, both furnaces will run the blower on the same speed. The cooling speed has highest priority, followed by heating speed and fan speed.

Field installation of twinning consists of connecting wires between the “C”, ”O” and ”Twin” terminals of the two controls. The 24 VAC secondary of the two systems must be in phase. All thermostat connections are made to one control only. See diagram below.

The twinned furnace without thermostat connections is to have the call for heat supplied by an external 24VAC isolation relay* to prevent its rollout switch from being bypassed by the other twinned furnace. The coil of the isolation relay connects from the thermostat ”W” to 24 VAC common. The contacts of the relay connect ”R” to ”W” on the non-thermostat twin.

*Wiring and quick connects will be field provided

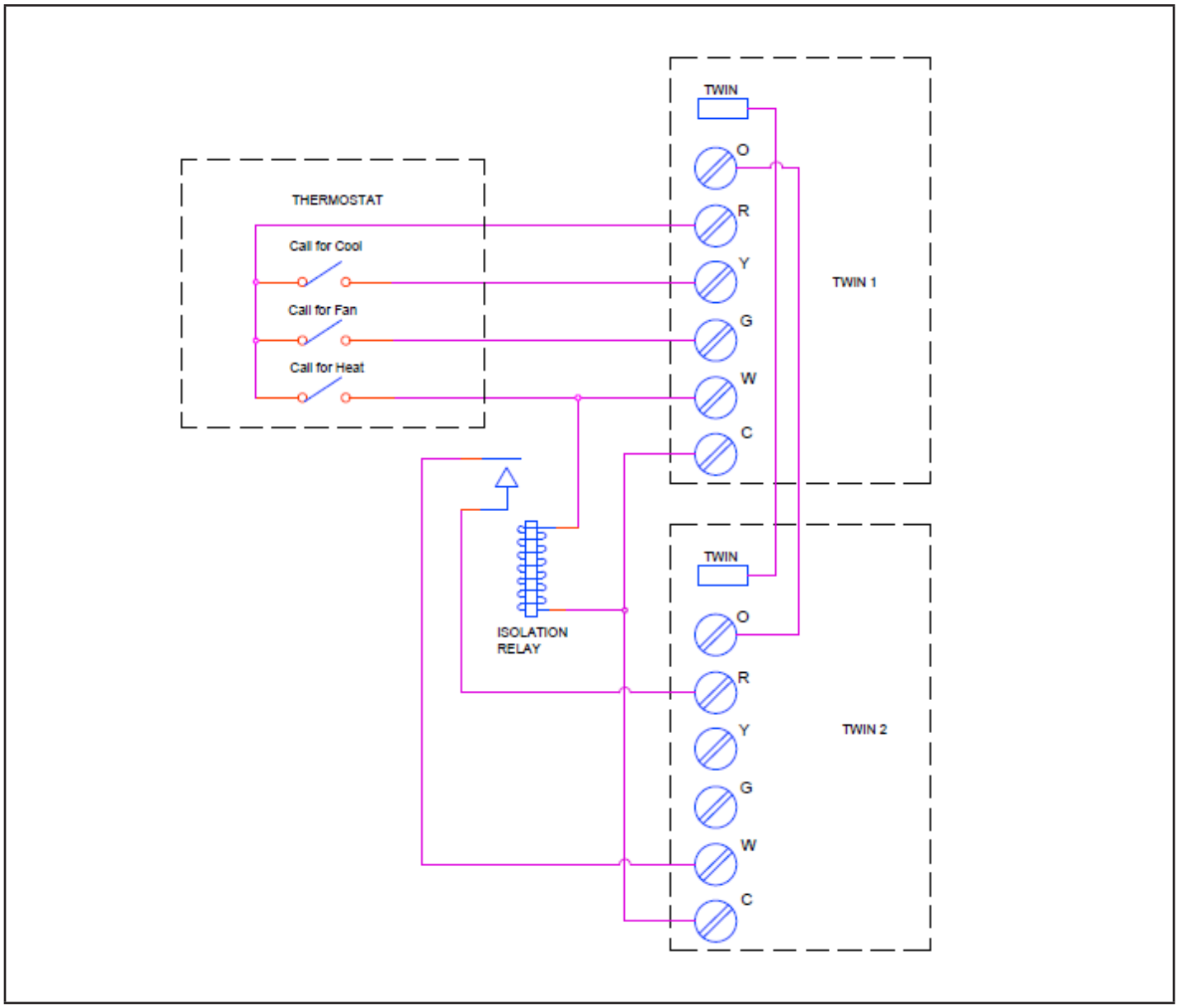

Low GWP Application

⚠ WARNING

For use with Lennox approved evaporator coil and LGWP sensors only. Use original manufacturer recommended LGWP sensors if using non Lennox approved evaporator coil.

CONNECTING THE FURNACE CONTROL BOARD SENSOR.

See FIGURE 59 and follow steps below:

1 - Route sensor wire #1 through provided grommet..

2 - Avoid sharp edges when routing sensor wire during installation.

3 - Sensor wire must not block view of 7 segment LED .

Ensure the cable is properly seated into the SENSOR 1 plug (LGWP1). The Molex plug clip should lock into the Molex connection point for a secured connection, as shown below in FIGURE 57. Verify the connection is free of dust, debris, and moisture.

NOTE - *-In confined space applications, connect the second sensor to the LGWP2 sensor plug. Refer to evaporator coil installation instructions for more detail.*

Single Stage Constant Torque Control

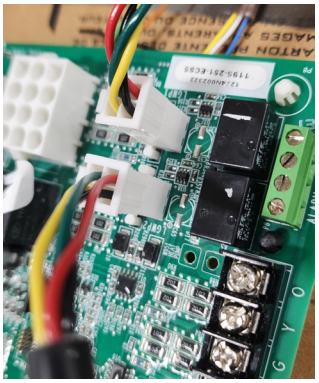

FIGURE 57

LOW GWP DIP SWITCH SETTINGS

Adjust the DIP switch settings to the sensor configuration. Failure to do so will cause faults on power-up. See FIGURE 58 and TABLE 17.

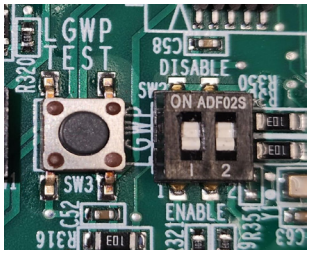

FIGURE 58

TABLE 17

DIP Switch Settings

Configuration	LGWP1	LGWP2
One (1) sensor, connected to SENSOR 1 plug	Enable	Disable
Two (2) sensors, connected to SENSOR 1 plug and SENSOR 2 plug	Enable	Enable
No sensor R410A or heat only applications	Disable	Disable
Invalid Configuration	Disable	Enable

In single sensor configurations, the sensor must be connected to the SENSOR 1 plug (LGWP1). Configurations other than the ones shown in TABLE 17 will cause a servicing fault.

Each DIP switch corresponds to a sensor position (i.e., DIP switch 1 to sensor 1; DIP switch 2 to sensor 2). The default factory switch positions are set to ENABLED.

The furnace control board software reads the ENABLE position as an active sensor. A sensor should be present for the corresponding sensor connector. Setting the DIP switch to DISABLE disables the sensor position.

SECONDARY SENSOR REQUIREMENTS

Additional Line Sets

If additional refrigerant line joints are present outside of the line set sleeve, and a secondary refrigerant detection sensor is required, its installation must comply with the requirements listed in Refrigerant Detection Sensor Kit (27V53). See FIGURE 59 for routing the secondary sensor cable through the furnace cabinet.

Non-Low GWP Applications

⚠ WARNING

For Furnace only applications or Furnace replacement in a Non-Low GWP applications, the LOW GWP sensors should be disabled, otherwise the blower will operate continuously. To do this, the Low GWP Dip switches setting for both – Sensor 1 and the Sensor 2 must be moved to the DISABLE position.

FURNACE CONTROL BOARD LOW GWP MODES OF OPERATION

The modes of operation for the furnace control board are Initializing, Normal, Leak Detected, and Fault.

Initializing

The furnace control board is establishing connection with the refrigerant detection sensor and is completing an initial five-minute purge sequence.

Normal

The HVAC system is functioning normally. The furnace control board has not detected a refrigerant leak.

Leak Detected

When the furnace control board detects a refrigerant leak:

1. The furnace control board shuts off the (R) input (24VAC power) to the thermostat, which de-energizes the outdoor unit compressor and heat sources, such as gas and/or electric strip heat. No heating or cooling demands will be met.
2. The furnace control board activates the blower (high speed). The blower purges refrigerant from the cabinet, plenum, and ductwork.
3. After the furnace control board determines the refrigerant levels are below the safety threshold, the blower will continue to operate for the remainder of the seven (7) -minute cycle.
4. After the blower sequence is complete, the HVAC system resumes normal operation.

NOTE - *The HVAC system may not maintain a cooling or heating setpoint if a significant leak exists. Any refrigerant leaks that remain unaddressed for an extended time may cause the HVAC system to shut down on a low refrigerant pressure limit condition.*

Fault

When a Low GWP fault is detected by the furnace control board, the indoor unit blower engages and remains engaged at a constant air flow output until the fault is cleared.

NOTE - *See* "IGNITION CONTROLDIAGNOSTIC CODES (CONTINUED)" on page 40.

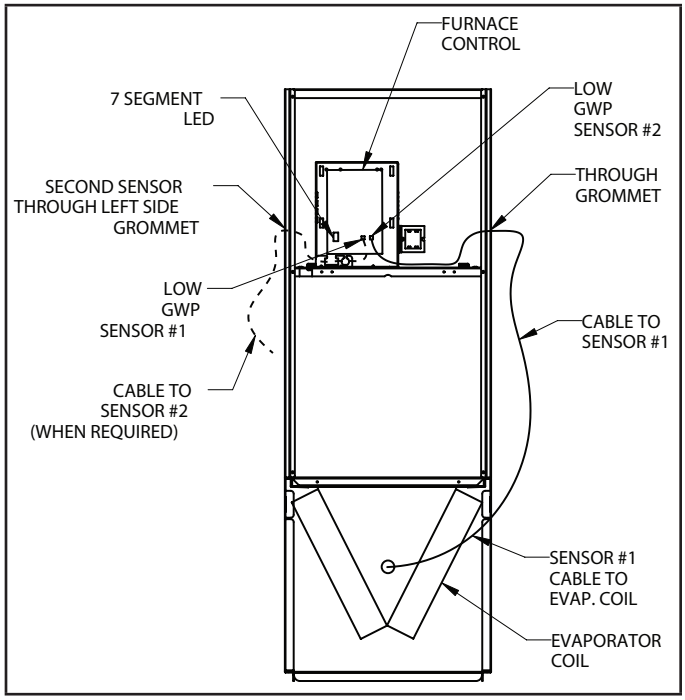

FIGURE 59

LGWP TEST BUTTON FUNCTIONALITY

The furnace control board is equipped with a Test/Reset push button. The Test button can be used to perform several functions, depending on the mode of operation of the furnace control board.

TABLE 18 lists the functions of the Test button during each mode of operation.

TABLE 18

LGWP Test Button Function

Mode of Operation	Press the Test Button to:
Normal	Trigger a leak detection response. Verify all equipment is wired correctly into the furnace blower control board (after installation).
Leak Detected	Reset the furnace control board to a normal mode of operation after a previous leak has been detected and purged from the HVAC system
Fault	Reset the furnace control board after troubleshooting and resolving a fault condition. If the fault is not resolved, the furnace control board will enter the Fault mode again.

LGWP Test Button - Additional Functions

TABLE 19 lists the additional functions of the Test Button while the furnace control board is functioning within the states of Initializing, Monitoring, Leak Detection, Servicing and Fault.

TABLE 19

Additional Button Functions

State	Press	Action
Initializing	Short	Skips remaining pre-purge after sensors are recognized by the furnace control board
Initializing	Long	Reset control
Monitoring	Short	Clear purge-counter if prior mitigation has occurred; Test mitigation
Monitoring	Long	Reset control
Mitigating	Short	If testing mitigation, end test
Servicing	Short	Reevaluate fault condition - if cleared return to monitoring, otherwise update indicator
Servicing	Long	Reset control
Fault	Short	Reevaluate fault condition - if cleared return to monitoring, otherwise update indicator
Fault	Long	Reset control

External Alarm

(*For applications with external alarms wired directly to the furnace control board*)

The furnace control board triggers the external alarm system when it enters Leak Detected mode. For alarm notifications, the furnace control board provides a dry relay contact that is rated 3A at 30 VAC/DC.

THERMOSTAT COMPATIBILITY

Thermostats that preserve memory settings are compatible with the furnace control board. Examples include:

Battery-powered thermostats

Analog thermostats

Late-model programmable thermostats

NOTE - *Early-generation digital and programmable thermostats may not retain the operation mode and temperature setpoints after a power outage.*

The following scenarios are likely to occur when home occupants are not available to adjust the thermostat setpoints as the system is recovering from leak detection and resuming normal operation:

Heating could be lost during a cold night

Cooling could be lost during a hot day

The thermostat could reset to an incorrect temperature setpoint

START UP PROCEDURE

The furnace control board is equipped with a LGWP Test/Reset button, see “Test Button Functionality”. After the furnace control board has been mounted and wired, restore power to the HVAC system. The system will then run through a purge sequence for five minutes. After the purge sequence is complete, proceed to testing cooling demand and heating demand.

Cooling Demand

1. Prompt a cooling demand at the thermostat.
2. Press the LGWP Test button on the furnace control board.

   The system then executes a leak detection response.
3. Observe the following sequence:
   a. The LED indicator for leak detection. “IGNITION CONTROLDIAGNOSTIC CODES (CONTINUED)” on page 40.
   b. The blower powers up.
   c. The outdoor compressor powers down.
4. Press the LGWP Test button to terminate the simulated Leak Detected mode upon test completion

Heating Demand

1. Prompt a heating demand at the thermostat.
2. Observe the following sequence:
   a. The LED indicator for leak detection. See “IGNITION CONTROLDIAGNOSTIC CODES (CONTINUED)” on page 40.
   b. The blower powers up.
   c. The gas burners power down.
   d. The outdoor compressor powers down.
3. Press the LGWP Test button to terminate the simulated Leak Detected mode upon test completion.

The installation of the furnace control board is complete after both sequences are successfully completed.

Unit Start Up

FOR YOUR SAFETY READ BEFORE OPERATING

⚠ WARNING

Electric shock hazard. Can cause injury or death. Do not use this unit if any part has been under water. Immediately call a qualified service technician to inspect the unit and to replace any part of the control system and any gas control which has been under water.

⚠ CAUTION

Before attempting to perform any service or maintenance, turn the electrical power to unit OFF at disconnect switch.

⚠ WARNING

Danger of explosion. Can cause injury or product or property damage. Should the gas supply fail to shut off or if overheating occurs, shut off the gas valve to the furnace before shutting off the electrical supply.

BEFORE LIGHTING the unit, smell all around the furnace area for gas. Be sure to smell next to the floor because some gas is heavier than air and will settle on the floor.

The gas valve on the ML193DFEK is equipped with a gas control switch. Use only your hand to move switch. Never use tools. If the switch will not move by hand, do not try to repair it. Force or attempted repair may result in a fire or explosion.

Placing the furnace into operation:

ML193DFEK units are equipped with an automatic hot surface ignition system. Do not attempt to manually light burners on this furnace. Each time the thermostat calls for heat, the burners will automatically light. The ignitor does not get hot when there is no call for heat on these units.

Priming Condensate Trap

The condensate trap should be primed with water prior to start-up to ensure proper condensate drainage. Either pour 10 fl. oz. (300 ml) of water into the trap, or follow these steps to prime the trap:

1 - Follow the lighting instructions to place the unit into operation.

2 - Set the thermostat to initiate a heating demand.

3 - Allow the burners to fire for approximately 3 minutes.

4 - Adjust the thermostat to deactivate the heating demand.

5 - Wait for the combustion air inducer to stop. Set the thermostat to initiate a heating demand and again allow the burners to fire for approximately 3 minutes.

6 - Adjust the thermostat to deactivate the heating demand and wait for the combustion air inducer to stop. At this point, the trap should be primed with sufficient water to ensure proper condensate drain operation.

⚠ WARNING

If you do not follow these instructions exactly, a fire or explosion may result causing property damage, personal injury or death.

Gas Valve Operation (FIGURE 60)

1 - **STOP!** Read the safety information at the beginning of this section.

2 - Set the thermostat to the lowest setting.

3 - Turn off all electrical power to the unit.

4 - This furnace is equipped with an ignition device which automatically lights the burners. Do not try to light the burners by hand.

5 - Remove the upper access panel.

6 - Move gas valve switch to OFF. See FIGURE 60.

7 - Wait five minutes to clear out any gas. If you then smell gas, STOP! Immediately call your gas supplier from a neighbor's phone. Follow the gas supplier's instructions. If you do not smell gas go to next step.

8 - Move gas valve switch to ON. See FIGURE 60.

9 - Replace the upper access panel.

10- Turn on all electrical power to the unit.

11- Set the thermostat to desired setting.

NOTE - *When unit is initially started, steps 1 through 11 may need to be repeated to purge air from gas line.*

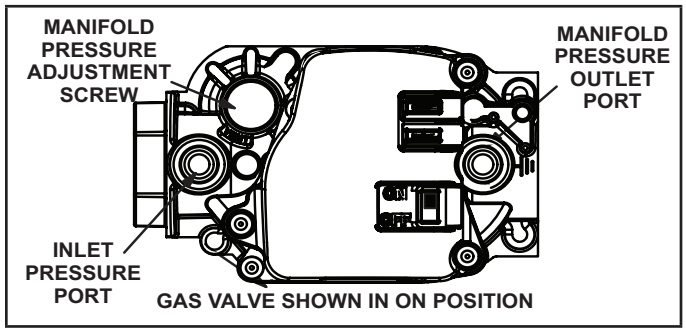

FIGURE 60

12- If the appliance will not operate, follow the instructions "Turning Off Gas to Unit" and call your service technician or gas supplier.

Turning Off Gas to Unit

1 - Set the thermostat to the lowest setting.

2 - Turn off all electrical power to the unit if service is to be performed.

3 - Remove the upper access panel.

4 - Move gas valve switch to OFF.

5 - Replace the upper access panel.

Failure To Operate

If the unit fails to operate, check the following:

1 - Is the thermostat calling for heat?
2 - Are access panels securely in place?
3 - Is the main disconnect switch closed?
4 - Is there a blown fuse or tripped breaker?
5 - Is the filter dirty or plugged? Dirty or plugged filters will cause the limit control to shut the unit off.
6 - Is gas turned on at the meter?
7 - Is the manual main shut-off valve open?
8 - Is the internal manual shut-off valve open?
9 - Is the unit ignition system in lockout? If the unit locks out again, inspect the unit for blockages.

Heating Sequence Of Operation

1 - When thermostat calls for heat, combustion air inducer starts.
2 - Combustion air pressure switch proves blower operation. Switch is factory-set and requires no adjustment.
3 - After a 15-second prepurge, the hot surface ignitor energizes.
4 - After a 20-second ignitor warm-up period, the gas valve solenoid opens. A 4-second Trial for Ignition period begins."
5 - Gas is ignited, flame sensor proves the flame, and the combustion process continues.
6 - If flame is not detected after first ignition trial, the ignition control will repeat steps 3 and 4 four more times before locking out the gas valve ("WATCHGUARD" flame failure mode). The ignition control will then automatically repeat steps 1 through 6 after 60 minutes. To interrupt the 60-minute "WATCHGUARD" period, move thermostat from "Heat" to "OFF" then back to "Heat". Heating sequence then restarts at step 1.

Gas Pressure Adjustment

Gas Flow (Approximate)

TABLE 20

GAS METER CLOCKING CHART				
ML193 Unit	Seconds for One Revolution			
	Natural		LP	
	1 cu ft Dial	2 cu ft Dial	1 cu ft Dial	2 cu ft Dial
-045	80	160	200	400
-070	55	110	136	272
-090	41	82	102	204
Natural-1000 btu/cu ft LP-2500 btu/cu ft				

NOTE - *To obtain accurate reading, shut off all other gas appliances connected to meter.*

Furnace should operate at least 5 minutes before checking gas flow. Determine time in seconds for two revolutions of gas through the meter. (Two revolutions assures a more accurate time). Divide by two and compare to time in TABLE 20. If manifold pressure matches TABLE 21 and rate is incorrect, check gas orifices for proper size and restriction. Remove temporary gas meter if installed.

Supply Pressure Measurement

A threaded plug on the inlet side of the gas valve provides access to the supply pressure tap. Remove the threaded plug, install a field-provided barbed fitting and connect a manometer to measure supply pressure. See TABLE 21 for proper supply line pressure. Replace the threaded plug after measurements have been taken.

TABLE 21

Supply Line and Manifold Pressure (inches w.c.)

Unit	Fuel	Manifold Pressure	Line Pressure
All	Nat. Gas	3.5	4.5 - 10.5
All	L.P. Gas	10.0	11.0 - 13.0

NOTE - *A natural to L.P. propane gas changeover kit is necessary to convert this unit. Refer to the changeover kit installation instruction for the conversion procedure.*

Manifold Pressure Measurement

1 - Connect the test gauge positive side "+" to manifold pressure tap on gas valve. Connect the test gauge positive side "+" to manifold pressure tap on gas valve.
2 - Tee into the gas valve regulator vent hose and connect to test gauge negative "-".
3 - Start unit and let run for 5 minutes to allow for steady state conditions.
4 - After allowing unit to stabilize for 5 minutes, record manifold pressure and compare to value given in TABLE 21.
5 - Shut unit off and remove manometer as soon as an accurate reading has been obtained. Take care to replace pressure tap plug.
6 - Start unit and perform leak check. Seal leaks if found.

Proper Combustion

Furnace should operate minimum 15 minutes with correct manifold pressure and gas flow rate before checking combustion. Take combustion sample beyond the flue outlet and compare to the table below. **The maximum carbon monoxide reading should not exceed 100 ppm.**

TABLE 22

ML193 Unit	CO_2 Nat	CO_2 LP
045	7.0 - 9.0	8.0 - 10.0
070		
090		
The maximum carbon monoxide reading should not exceed 100 pm.		

High Altitude Information

NOTE - *In Canada, certification for installations at elevations over 4500 feet (1372 m) is the jurisdiction of local authorities.*

Units may be installed at altitudes up to 10,000 ft. above sea level. See TABLE 23 for de-rate manifold values. Units installed at altitude of 7501 - 10,000 feet require an orifice change. Units installed at altitude of 4501 - 10,000 feet require a pressure switch change which can be ordered separately. TABLE 24 lists conversion kit and pressure switch requirements at varying altitudes.

The combustion air pressure switch is factory-set and requires no adjustment.

NOTE - *A natural to LP/propane gas changeover kit is necessary to convert this unit. Refer to the changeover kit installation instruction for the conversion procedure.*

TABLE 23

Manifold and Supply Line Pressure 0-10,000ft.

ML193E Unit	Gas	Manifold Pressure in. wg.					Supply Line Pressure in. w.g. 0 - 10000 ft.	
		0 - 4500 ft	4501 - 5500 ft	5501 - 6500 ft	6501 - 7500 ft	7501 - 10,000 ft		
All Sizes	Natural	3.5	3.3	3.2	3.1	3.5	4.5	13.0
	L.P. Propane	10.0	9.4	9.1	8.9	10.0	11.0	13.0

NOTE - A natural to L.P. Propane gas changeover kit is necessary to convert this unit. Refer to the changeover kit installation instruction for the conversion procedure.

TABLE 24

Conversion Kit and Pressure Switch Requirements at Varying Altitudes

ML193E Unit	Natural to LP/ Propane	High Altitude Natural Burner Orifice Kit	LP/Propane to Natural	High Altitude LP/ Propane Burner Orifice Kit	High Altitude Pressure Switch	
	0 - 7500 ft (0 - 2286m)	7501 - 10,000 ft (2286 - 3038m)	0 - 7500 ft (0 - 2286m)	7501 - 10,000 ft (2286 - 3038m)	4501 - 7500 ft (1373 - 2286m)	7501 -10,000 ft (2286 - 3048m)
-045	*11K49	73W37	*73W81	*11K44	11U65	11U66
-070						
-090						

* Conversion requires installation of a gas valve manifold spring which is provided with the gas conversion kit. Pressure switch is factory set. No adjustment necessary. All models use the factory-installed pressure switch from 0-4500 feet (0-1370 m).

Testing of Non-Direct Vent Applications for Proper Venting and Sufficient Combustion Air

⚠ WARNING

. CARBON MONOXIDE POISONING HAZARD!

Failure to follow the steps outlined below for each appliance connected to the venting system being placed into operation could result in carbon monoxide poisoning or death.

The following steps shall be followed for each appliance connected to the venting system being placed into operation, while all other appliances connected to the venting system are not in operation.

After the ML193DFEK gas furnace has been started, the following test should be conducted to ensure proper venting and sufficient combustion air has been provided to the ML193DFEK as well as to other gas-fired appliances which are separately vented.

If a ML193DFEK furnace replaces a Category I furnace which was commonly vented with another gas appliance, the size of the existing vent pipe for that gas appliance must be checked. Without the heat of the original furnace flue products, the existing vent pipe is probably oversized for the single water heater or other appliance. The vent should be checked for proper draw with the remaining appliance.

The test should be conducted while all appliances (both in operation and those not in operation) are connected to the venting system being tested. If the venting system has been installed improperly, or if provisions have not been made for sufficient amounts of combustion air, corrections must be made as outlined in the previous section.

1 - Seal any unused openings in the venting system.

2 - Visually inspect the venting system for proper size and Horizontal pitch. Determine there is no blockage or restriction, leakage, corrosion, or other deficiencies which could cause an unsafe condition.

3 - To the extent that it is practical, close all building doors and windows and all doors between the space in which the appliances connected to the venting system are located and other spaces of the building.

4 - Close fireplace dampers.

5 - Turn on clothes dryers and any appliances not connected to the venting system. Turn on any exhaust fans, such as range hoods and bathroom exhausts, so they will operate at maximum speed. Do not operate a summer exhaust fan.

6 - Follow the lighting instruction to place the appliance being inspected into operation. Adjust thermostat so appliance will operate continuously.

7 - Use the flame of match or candle to test for spillage of flue gases at the draft hood relief opening after 5 minutes of main burner operation.

8 - If improper venting is observed during any of the above tests, the venting system must be corrected or sufficient combustion/make-up air must be provided. The venting system should be re-sized to approach the minimum size as determined by using the appropriate tables in appendix G in the current standard of the National Fuel Gas Code ANSI-Z223.1/NPFA 54 in the U.S.A., and the appropriate Natural Gas and Propane appliances venting sizing tables in the current standard of the CSA-B149 Natural Gas and Propane Installation Codes in Canada.

9 - After determining that each appliance remaining connected to the common venting system properly vents when tested as indicated in step 3, return doors, windows, exhaust fans, fireplace dampers and any other gas-burning appliance to their previous condition of use.

Other Unit Adjustments

Primary Limit

The primary limit is located on the heating compartment vestibule panel. This limit is factory set and requires no adjustment.

Flame Rollout Switches (Two)

These manually reset switches are located on the front of the burner box.

Pressure Switch

The pressure switch is located in the heating compartment on the cold end header box. This switch checks for proper combustion air inducer operation before allowing ignition trial. The switch is factory-set and must not be adjusted.

Temperature Rise

After the furnace has been started and supply and return air temperatures have been allowed to stabilize, check the temperature rise. If necessary, adjust the blower speed to maintain the temperature rise within the range shown on the unit nameplate. Increase the blower speed to decrease the temperature. Decrease the blower speed to increase the temperature rise. Failure to adjust the temperature rise may cause erratic limit operation.

Blower Speeds

Follow the steps below to change the blower speeds.

1 - Turn off electrical power to furnace.
2 - Remove blower access panel.
3 - Disconnect existing speed tap at integrated control speed terminal.

NOTE - *Termination of any unused motor leads must be insulated.*

4 - Place unused blower speed tap on integrated control “PARK” terminal or insulate.
5 - Refer to blower speed selection chart on unit wiring diagram for desired heating or cooling speed. See Product Specifications bulletin for blower performance tables.
6 - Connect selected speed tap at integrated control speed terminal.
7 - Re-secure blower access panel.
8 - Turn on electrical power to furnace.
9 - Recheck temperature rise.

Exhaust and Air Intake Pipe

1 - Check exhaust and air intake connections for tightness and to make sure there is no blockage.
2 - Is pressure switch closed? Obstructed exhaust pipe will cause unit to shut off at pressure switch. Check termination for blockages.
3 - Obstructed pipe or termination may cause rollout switches to open. Reset manual flame rollout switches on burner box assembly if necessary.

Electrical

1 - Check all wiring for loose connections.
2 - Check for the correct voltage at the furnace (furnace operating).
3 - Check amp-draw on the blower motor.

Motor Nameplate_____Actual_____

Thermostat Heat Anticipation

Set the heat anticipator setting (if adjustable) according to the amp draw listed on the wiring diagram that is attached to the unit.

Flame Sensor

A flame sensor is located on the left side of the burner support. The sensor is mounted on the front burner box plate and the tip protrudes into the flame envelope of the leftmost burner. The sensor can be removed for service (use steel wool only to clean) without removing any part of the burners. During operation, flame is sensed by current passed through the flame and sensing electrode. The ignition control allows the gas valve to remain open as long as flame signal is sensed. See table below for flame signal.

TABLE 25

Flame Signal in Microamps		
Normal	Low	Drop Out
1.5 or greater	0.5 - 1.4	0.4 or less

⚠ WARNING

. ELECTRICAL SHOCK, FIRE,
OR EXPLOSION HAZARD.

Failure to follow safety warnings exactly could result in dangerous operation, serious injury, death or property damage.

Improper servicing could result in dangerous operation, serious injury, death, or property damage. Before servicing, disconnect all electrical power to furnace.

When servicing controls, label all wires prior to disconnecting. Take care to reconnect wires correctly.

Verify proper operation after servicing.

⚠ WARNING

The blower access panel must be securely in place when the blower and burners are operating. Gas fumes, which could contain carbon monoxide, can be drawn into living space resulting in personal injury or death.

Annual Furnace Maintenance

At the beginning of each heating season, and to comply with the Lennox Limited Warranty, your system should be checked as follows:

1 - Check wiring for loose connections, voltage at indoor unit and amperage of indoor motor.

2- Check the condition of the belt and shaft bearings if applicable.

3- Inspect all gas pipe and connections for leaks.

4- Check the cleanliness of filters and change if necessary (monthly).

5- Check the condition and cleanliness of burners andeat exchanger and clean if necessary.

6- Check the cleanliness of blower assembly and clean the housing, blower wheel and blower motor if necessary

7- Inspect the condensate drain and trap for leaks and cracks. The drain and trap must also be cleaned and the trap must be primed with water. Inspect the rubber hoses connected to the pressure switches for cracks or loose connections, replace as necessary. Remove the rubber hoses from the cold end header box and inspect for any blockage, clean as needed. If strainers are installed in the hoses remember to remove and clean before reinstalling the hoses.

8- Evaluate the heat exchanger integrity by inspecting the heat exchanger per the AHRI heat exchanger inspection procedure. This procedure can be viewed at www.ahrinet.org

9- Ensure sufficient combustion air is available to the furnace. Fresh air grilles and louvers (on the unit and in the room where the furnace is installed) must be properly sized, open and unobstructed to provide combustion air.

10-Inspect the furnace intake and exhaust pipes to make sure they are in place, structurally sound, without holes, blockage or leakage and the exhaust pipe is sloped toward he furnace. Inspect terminations to ensure they are free of obstructions and are structurally sound. Inspect the furnace return air duct connection to ensure the duct is sealed to the furnace. Check for air leaks on supply and return ducts and seal where necessary.

11- Inspect the furnace return air duct connection to ensure the duct is sealed to the furnace. Check for air leaks on supply and return ducts and seal where necessary.

12- Check the condition of the furnace cabinet insulation and repair if necessary.

13- Perform a complete combustion analysis during the furnace inspection to ensure proper combustion and operation. Consult Service Literature for proper combustion values.

14- Verify operation of CO detectors and replace batteries as required.

15- Inspect the Low GWP sensor / sensors and rubber sleeve.

Perform a general system test. Turn on the furnace to check operating functions such as the start-up and shut-off operation.

1 - Check the operation of the ignition system, inspect and clean flame sensor. Check microamps before and after. Check controls and safety devices (gas valve, flame sensor, temperature limits). Consult Service Manual for proper operating range. Thermal Limits should be checked by restricting airflow and not disconnecting the indoor blower. For additional details, please see Service and Application Note H049.

2 - Verify that system total static pressure and airflow settings are within specific operating parameters.

3 - Clock gas meter to ensure that the unit is operating at the specified firing rate. Check the supply pressure and the manifold pressure. If manifold pressure adjustment is necessary, consult the Service Literature for unit specific information on adjusting gas pressure. Not all gas valves are adjustable. Verify correct temperature rise.

Winterizing and Condensate Trap Care

1 - Turn off power to the furnace.

2 - Have a shallow pan ready to empty condensate water.

3 - Remove the clean out cap from the condensate trap and empty water. Inspect the trap then reinstall the drain plug.

Cleaning the Burner Assembly

1 - Turn off electrical and gas power supplies to furnace. Remove upper and lower furnace access panels.

2 - Disconnect the 2-pin plug from the gas valve.

3 - Remove the burner box cover.

4 - Disconnect the gas supply line from the gas valve. Remove gas valve/manifold assembly.

5 - Mark and disconnect sensor wire from the sensor. Disconnect 2-pin plug from the ignitor at the burner box.

6 - Remove four screws which secure burner box assembly to vest panel. Remove burner box from the unit.

7 - Use the soft brush attachment on a vacuum cleaner to gently clean the face of the burners. Visually inspect the inside of the burners and crossovers for any blockage caused by foreign matter. Remove any blockage.

8 - Reconnect the sensor wire and reconnect the 2-pin plug to the ignitor wiring harness.

9 - Reinstall the burner box assembly using the existing four screws. Make sure that the burners line up in the center of the burner ports.

10 - Reinstall the gas valve manifold assembly. Reconnect the gas supply line to the gas valve. Reinstall the burner box cover.

11 - Reconnect 2-pin plug to gas valve.

12 - Replace the blower compartment access panel.

13 - Refer to instruction on verifying gas and electrical connections when re-establishing supplies.

14 -Follow lighting instructions to light and operate furnace for 5 minutes to ensure that heat exchanger is clean and dry and that furnace is operating properly.

15 - Replace heating compartment access panel

Repair Parts List

The following repair parts are available through Lennox dealers. When ordering parts, include the complete furnace model number listed on the CSA nameplate -- Example: ML193DF045XE36BK. **All service must be performed by a licensed professional installer (or equivalent), service agency, or gas supplier.**

Cabinet Parts

Upper access panel
Blower access panel
Top Cap

Control Panel Parts

Transformer
Integrated control board
Door interlock switch

Blower Parts

Blower wheel
Motor
Motor mounting frame
Motor capacitor
Blower housing cutoff plate

Heating Parts

Flame Sensor
Heat exchanger assembly
Gas manifold
Combustion air inducer
Gas valve
Main burner cluster
Main burner orifices
Pressure switch
Ignitor
Primary limit control
Flame rollout switches

Refrigerant Detection System Parts

Refrigerant Detection Sensor
Refrigerant Line Set Sleeve

LENNOX

UNIT SET UP
(typical)

Furnace:
Model Number_____

Serial Number_____

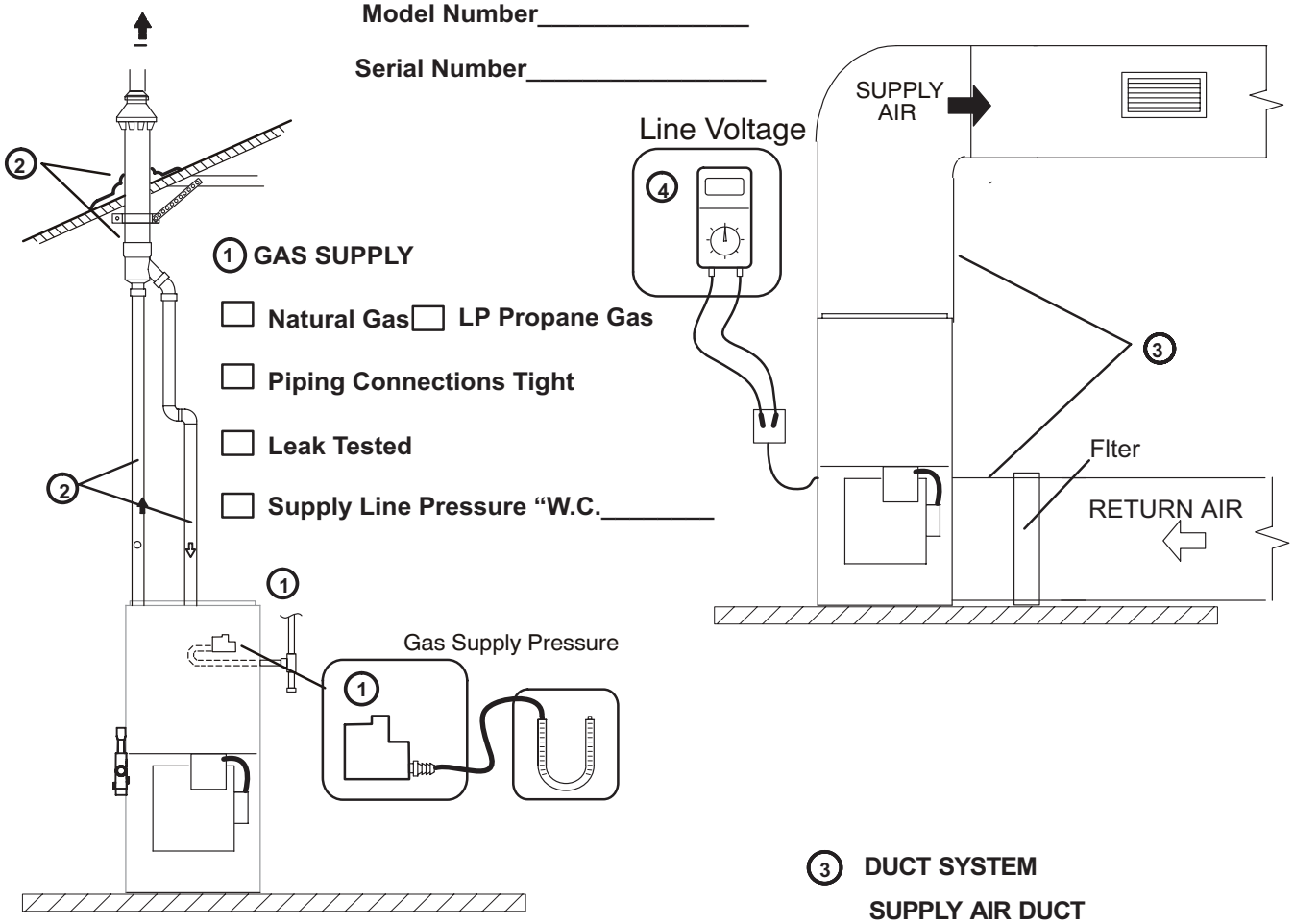

1 GAS SUPPLY

- ☐ Natural Gas ☐ LP Propane Gas
- ☐ Piping Connections Tight
- ☐ Leak Tested
- ☐ Supply Line Pressure "W.C._____

2 INTAKE / EXHAUST PIPE

- ☐ All Joints Primed and Glued
- ☐ Terminations Installed Properly
- ☐ Horizontal Pipes Sloped (if applicable)
- ☐ Condensate Trap Primed / Line Sloped
- ☐ Pipes Supported
- ☐ Heat Cable Installed and Operable (if applicable)

3 DUCT SYSTEM

SUPPLY AIR DUCT

- ☐ Sealed
- ☐ Insulated (if necessary)

RETURN DUCT

- ☐ Sealed
- ☐ Filter Installed and Clean
- ☐ Grilles Unobstructed

4 VOLTAGE CHECK

Supply Voltage _____

LENNOX

UNIT OPERATION

HEATING MODE

1. GAS MANIFOLD PRESSURE "W.C._____
2. COMBUSTION SAMPLE CO_2%_____CO PPM_____
3. INDOOR BLOWER AMPS_____
4. TEMPERATURE RISE
   - Supply Duct Temperature _____
   - Return Duct Temperature – _____
   - Temperature Rise = _____
5. TOTAL EXTERNAL STATIC
   - Supply External Static _____
   - Return External Static + _____
   - Total External Static = _____
6. CONDENSATE LINE
   - ☐ Leak Free
7. VENT PIPE
   - ☐ Leak Free

COOLING MODE

3. INDOOR BLOWER AMPS_____
4. TEMPERATURE DROP
   - Return Duct Temperature _____
   - Supply Duct Temperature – _____
   - Temperature Drop = _____
5. TOTAL EXTERNAL STATIC (dry coil)
   - Supply External Static _____
   - Return External Static + _____
   - Total External Static = _____
8. DRAIN LINE
   - ☐ Leak Free
9. THERMOSTAT
   - ☐ Adjusted and Programmed
   - ☐ Explained Operation to Owner

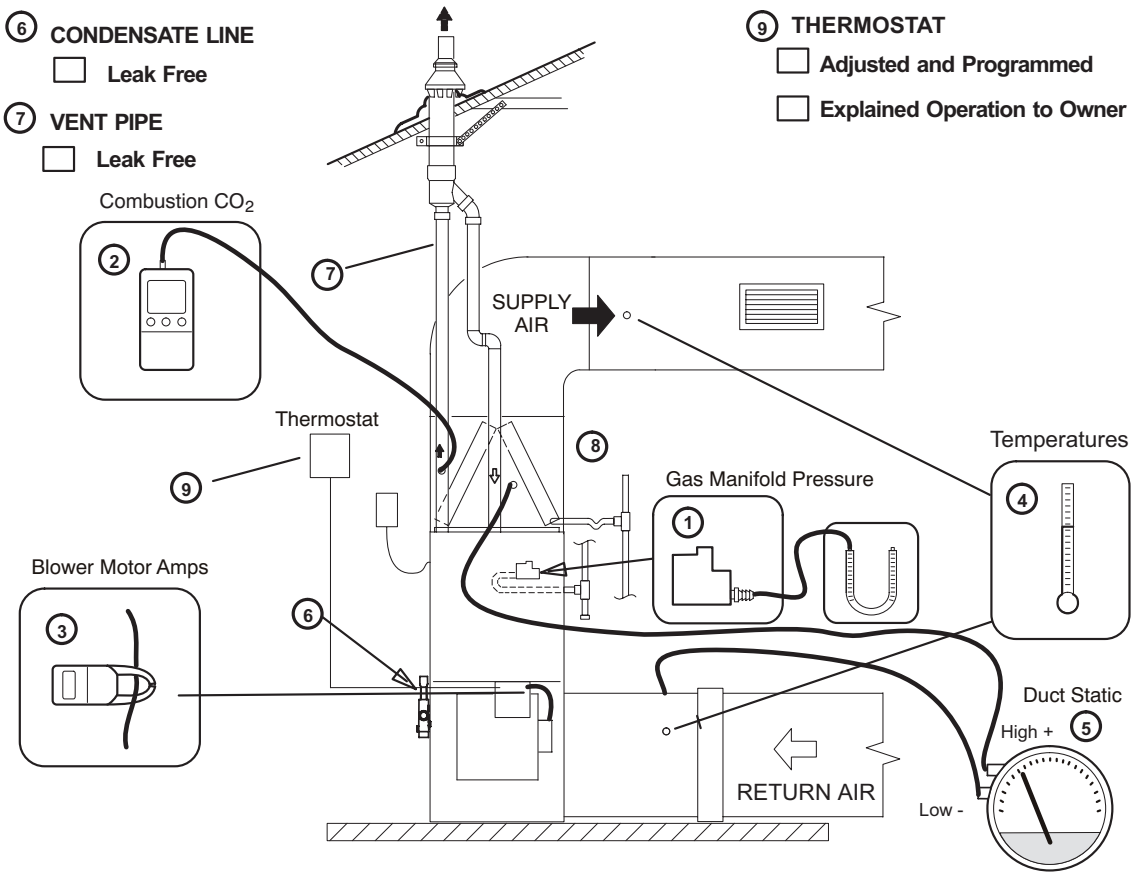

Contractor's: Name_____Telephone_____Checklist Completed_____

Job Address_____-_____Technician's Name_____

Requirements for Commonwealth of Massachusetts

Modifications to NFPA-54, Chapter 10

Revise NFPA-54 section 10.8.3 to add the following requirements:

For all side wall, horizontally vented, gas-fueled equipment installed in every dwelling, building or structure used in whole or in part for residential purposes, including those owned or operated by the Commonwealth and where the side wall exhaust vent termination is less than seven (7) feet above the finished grade in the area of the venting, including but not limited to decks and porches, the following requirements shall be satisfied:

1 - INSTALLATION OF CARBON MONOXIDE DETECTORS. At the time of installation of the side wall, horizontally vented, gas-fueled equipment, the installing plumber or gasfitter shall observe that a hard-wired carbon monoxide detector with an alarm and battery backup is installed on the floor level where the gas equipment is to be installed. In addition, the installing plumber or gasfitter shall observe that a battery-operated or hard-wired carbon monoxide detector with an alarm is installed on each additional level of the dwelling, building or structure served by the side wall, horizontally vented, gas-fueled equipment. It shall be the responsibility of the property owner to secure the services of qualified licensed professionals for the installation

   a. In the event that the side wall, horizontally vented, gas-fueled equipment is installed in a crawl space or an attic, the hard-wired carbon monoxide detector with alarm and battery back-up may be installed on the next adjacent floor level.

   b. In the event that the requirements of this subdivision cannot be met at the time of completion of installation, the owner shall have a period of thirty (30) days to comply with the above requirements; provided, however, that during said thirty (30) day period, a battery-operated carbon monoxide detector with an alarm shall be installed.

2 - APPROVED CARBON MONOXIDE DETECTORS. Each carbon monoxide detector as required in accordance with the above provisions shall comply with NFPA 720 and be ANSI/UL 2034 listed and IAS certified.

3 - SIGNAGE. A metal or plastic identification plate shall e permanently mounted to the exterior of the building at a minimum height of eight (8) feet above grade directly in line with the exhaust vent terminal for the horizontally vented, gas-fueled heating appliance or equipment. The sign shall read, in print size no less than one-half (1/2) inch in size, “GAS VENT DIRECTLY BELOW. KEEP CLEAR OF ALL OBSTRUCTIONS.”

4 - INSPECTION. The state or local gas inspector of the side wall, horizontally vented, gas-fueled equipment shall not approve the installation unless, upon inspection, the inspector observes carbon monoxide detectors and signage installed in accordance with the provisions of 248 CMR 5.08(2)(a) 1 through 4.

EXEMPTIONS: The following equipment is exempt from 24 CMR 5.08(2)(a) 1 through 4:

1 - The equipment listed in Chapter 10 entitled “Equipment Not Required to Be Vented” in the most current edition of NFPA 54 as adopted by the Board; and

2 - Product Approved side wall, horizontally vented, gasfueled equipment installed in a room or structure separate from the dwelling, building or structure used in whole or in part for residential purposes.

MANUFACTURER REQUIREMENTS - GAS EQUIPMENT VENTING SYSTEM PROVIDED.

When the manufacturer of Product Approved side wall, horizontally vented, gas-fueled equipment provides a venting system design or venting system components with the equipment, the instructions provided by the manufacturer for installation of the equipment and the venting system shall include:

1 - Detailed instructions for the installation of the venting system design or the venting system components: and

2 - A complete parts list for the venting system design or venting system.

MANUFACTURER REQUIREMENTS - GAS EQUIPMENT VENTING SYSTEM NOT PROVIDED.

When the manufacturer of Product Approved side wall, horizontally vented, gas-fueled equipment does not provide the parts for venting the flue gases, but identifies “special venting systems,” the following requirements shall be satisfied by the manufacturer:

1 - The referenced “special venting system” instructions shall be included with the appliance or equipment installation instructions; and

2 - The “special venting systems” shall be Product Approved by the Board, and the instructions for that system shall include a parts list and detailed installation instructions.

A copy of all installation instructions for all Product Approved side wall, horizontally vented, gas-fueled equipment, all venting instructions, all parts lists for venting instructions, and/or all venting design instructions shall remain with the appliance or equipment at the completion of the installation.

FOR THE PROVINCE OF ONTARIO, HORIZONTAL SIDE-WALL VENT APPLICATIONS ONLY

For exterior horizontal venting applications, the 2” X 1.5” reducer for 2” venting at the point where the exhaust pipe exits the structure is not required in direct or non-direct vent applications in the Province of Ontario. In these applications, the vent should be oriented such that the exhaust plume is unobjectionable. If the installation requires more separation between the flue gases and the building structure, a reducer may be installed on the exhaust pipe to increase the flue gas velocity.

ADDENDUM FOR ALL PROVINCES OF CANADA

See below for venting in all provinces of Canada. Lennox approves the following termination for use in all provinces of Canada.

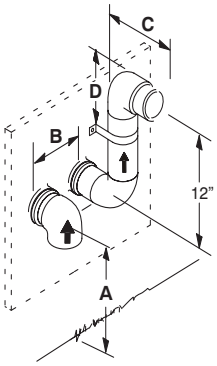

	2” (51MM) Vent Pipe	3” (76MM) Vent Pipe
A – Clearance above grade or average snow accumulation	12” (305 mm) Min.	12” (305 mm) Min.
B – Horizontal separation between intake and exhaust	6” (152 mm) Min. 24” (610 mm) Max.	6” (152 mm) Min. 24” (610 mm) Max.
C – Exhaust pipe length	Per: Saskatchewan Code of Practice	
D – Wall support distance from top of each pipe (intake/exhaust)	6” (152 mm) Max.	6” (152 mm) Max.

NOTE – Flue gas may be acidic and may adversely affect some building materials. If flue gases impinge on the building materials, a corrosion–resistant shield should be used to protect the wall surface. The shield should be constructed using wood, sheet metal or other suitable material. All seams, joints, cracks, etc. in affected area, should be sealed using an appropriate sealant.

BLOWER DATA

ML193DF045XE36BK PERFORMANCE (Less Filter)

External Static Pressure in. w.g.	Air Volume / Watts at Various Blower Speeds									
	High (Black)		Medium-High (Brown)		Medium (Blue)		Medium-Low (Yellow)		Low (Red)	
	cfm	Watts	cfm	Watts	cfm	Watts	cfm	Watts	cfm	Watts
0.10	1376	357	1247	281	1101	203	918	122	744	78
0.20	1349	365	1223	287	1074	210	890	125	712	81
0.30	1324	372	1199	294	1048	216	854	131	672	86
0.40	1295	381	1172	302	1018	223	824	136	631	91
0.50	1272	389	1143	311	992	230	786	141	596	95
0.60	1253	395	1121	317	961	237	764	146	528	100
0.70	1226	404	1096	325	932	243	704	150	517	103
0.80	1202	411	1074	333	898	251	688	157	466	107
0.90	1177	420	1041	341	876	256	659	160	436	111
1.00	1146	431	1014	348	833	262	634	163	392	116

ML193DF070XE36BK PERFORMANCE (Less Filter)

External Static Pressure in. w.g.	Air Volume / Watts at Various Blower Speeds									
	High (Black)		Medium-High (Brown)		Medium (Blue)		Medium-Low (Yellow)		Low (Red)	
	cfm	Watts	cfm	Watts	cfm	Watts	cfm	Watts	cfm	Watts
0.10	1413	355	1283	280	1132	203	908	119	756	78
0.20	1384	365	1264	286	1109	209	882	124	708	83
0.30	1365	373	1241	294	1078	216	852	129	676	87
0.40	1340	379	1212	302	1051	223	802	136	648	90
0.50	1318	388	1185	309	1024	228	771	141	574	97
0.60	1291	396	1166	315	995	234	732	145	524	100
0.70	1274	402	1143	321	963	241	716	148	479	105
0.80	1243	411	1099	332	925	248	650	156	452	108
0.90	1226	416	1077	338	909	254	635	158	407	112
1.00	1199	425	1056	344	874	260	578	163	299	103

ML193DF090XE48CK PERFORMANCE (Less Filter)

External Static Pressure in. w.g.	Air Volume / Watts at Various Blower Speeds									
	High (Black)		Medium-High (Brown)		Medium (Blue)		Medium-Low (Yellow)		Low (Red)	
	cfm	Watts	cfm	Watts	cfm	Watts	cfm	Watts	cfm	Watts
0.10	1701	437	1477	302	1364	241	1289	207	1158	160
0.20	1673	445	1444	310	1335	248	1255	213	1123	166
0.30	1640	455	1430	318	1299	257	1215	220	1085	173
0.40	1611	463	1370	326	1266	264	1178	227	1035	180
0.50	1586	470	1351	334	1230	274	1147	235	1003	187
0.60	1542	480	1313	343	1185	282	1088	244	957	195
0.70	1519	488	1289	351	1156	288	1057	251	908	204
0.80	1485	496	1255	359	1122	296	1007	258	878	207
0.90	1468	509	1225	367	1071	307	964	264	788	214
1.00	1417	513	1184	376	1075	309	924	270	784	218