©2026

INSTALLATION INSTRUCTIONS

LGX/LCX180S (15 Ton)
LGX/LCX210S (17.5 Ton)
LGX/LCX240S (20 Ton)
LGX/LCX300S (25 Ton)

ROOFTOP PACKAGED UNITS

508515-02
10/2026
Supersedes 04/2026

R-454B

⚠ WARNING

Improper installation, adjustment, alteration, service or maintenance can cause property damage, personal injury or loss of life. Installation and service must be performed by a licensed professional HVAC installer or equivalent, service agency, or the gas supplier.

Table of Contents

Unit Dimensions 4
Parts Arrangement 7
Shipping and Packing List 8
General 8
Requirements 8
Unit Support 10
Duct Connection 11
Rigging for Lifting 11
Condensate Drains 11
Connect Gas Piping 12
Pressure Test Gas Piping 13
High Altitude Derate 13
Electrical Connections - Power Supply 13
Electrical Connections - Control Wiring 14
Mobile Service App 17
Blower Operation and Adjustments 20
Refrigerant Leak Detection System 26
Cooling Start-Up 26
Prognostic Sensors 49
Gas Heat Start-Up (Gas Units) 53
Heating Operation and Adjustments 54
Electric Heat Start-Up (LCX Units) 55
Multi-Stage Air Volume Start-Up 56
Hot Gas Reheat Start-Up and Operation 61
Preventative Maintenance / Repair 63
Factory Unit Controller Settings 68
Decommissioning 71

RETAIN THESE INSTRUCTIONS FOR FUTURE REFERENCE

Attention!

Use this QR code to download the mobile service app. Follow the prompts to pair the app with the Unit Controller. Refer to the “Mobile Service App” section in this manual. The QR code is also available in the unit control area.

2610
508515-02

⚠ CAUTION

As with any mechanical equipment, contact with sharp sheet metal edges can result in personal in jury. Take care while handling this equipment and wear gloves and protective clothing.

⚠ WARNING

Only manufacturer approved auxiliary devices are permitted to be installed in this unit.

⚠ WARNING

If this appliance is conditioning a space with an area smaller than TAmin or stored in a space with an area smaller than Amin as defined by this instruction, then that space must be without continuously operating open flames (e.g. an operating gas appliance) or other potential ignition sources (e.g. an operating electric heater or similar hot surface). A flame-producing device may be installed in the same space if the device is provided with an effective flame arrest system.

⚠ WARNING

•Do not use means to accelerate the defrosting process or to clean, other than those recommended by the manufacturer.

•The appliance shall be stored in a room without continuously operating ignition sources (for example: open flames, an operating gas appliance, or an operating electric heater).

•Do not pierce or burn.

•Be aware that refrigerants may not contain an odor.

⚠ CAUTION

Auxiliary devices which may be a potential ignition source shall not be installed in the duct work. Examples of such potential ignition sources are hot surfaces with a temperature exceeding 700°C and electric switching devices.

⚠ CAUTION

Any personnel installing, decommissioning, or performaing maintenance on the unit must be properly trained with A2L refrigerants.

⚠ CAUTION

Leak Detection System installed. Unit must be powered except for service.

⚠ CAUTION

Servicing shall be performed only as recommended by the manufacturer.

⚠ WARNING

•This appliance must be installed in accordance with local and national wiring regulations.

•If the appliance is not fitted with an option for full disconnection from power, a means of disconnection must be incorporated in the fixed wiring in accordance with national and local wiring regulations.

⚠ WARNING

Ducts connected to an appliance shall not contain a potential ignition source.

⚠ CAUTION

The appliance is not to be used by persons (including children) with reduced physical, sensory or mental capabilities, or lack of experience and knowledge, unless they have been given supervision or instruction

⚠ CAUTION

Children should be supervised not to play with the appliance.

⚠ IMPORTANT

Pipe work, including piping material, pipe routing, and installation shall include protection from physical damage in operation and service, and be in compliance with national and local codes and standards, such as ASHRAE 15, ASHRAE 15.2, IAPMO Uniform Mechanical Code, ICC International Mechanical Code, or CSA B52. All field joints shall be accessible for inspection prior to being covered or enclosed.

⚠ IMPORTANT

Refrigerant sensors for refrigerant detection systems shall only be replaced with sensors specified by the appliance manufacture.

⚠ CAUTION

This unit is equipped with electrically powered safety measures. To be effective, the unit must be electrically powered at all times after installation, other than when servicing.

A2L Refrigerant Considerations

Ensure that the work area is adequately ventilated before breaking into the system or conducting any hot work. A degree of ventilation shall continue during the period that the work is carried out. The ventilation should safely disperse any released refrigerant and preferably expel it externally into the atmosphere.

Check that cabling will not be subject to wear, corrosion, excessive pressure, vibration, sharp edges or any other adverse environmental effects, taking into account the effects of aging or continual vibration from sources such as compressors or fans.

Under no circumstances shall potential sources of ignition be used when searching for or detecting refrigerant leaks. A halide torch (or any other detector using a naked flame) shall not be used. Electronic leak detectors may be used to detect refrigerant leaks but, in the case of flammable refrigerants, the sensitivity may not be adequate, or may need re-calibration. (Detection equipment shall be calibrated in a refrigerant-free area.) Ensure that the detector is not a potential source of ignition and is suitable for the refrigerant used. Leak detection equipment shall be set at a percentage of the LFL of the refrigerant and shall be calibrated to the refrigerant employed, and the appropriate percentage of gas (25% maximum) is confirmed. Leak detection fluids are also suitable for use with most refrigerants but the use of detergents containing chlorine shall be avoided as the chlorine may react with the refrigerant and corrode the copper pipe-work. If a leak is suspected, all naked flames shall be removed/extinguished. If a leakage of refrigerant is found which requires brazing, all of the refrigerant shall be recovered from the system, or isolated (by means of shut off valves) in a part of the system remote from the leak.

When breaking into the refrigerant circuit to make repairs – or for any other purpose – conventional procedures shall be used. However, for flammable refrigerants it is important that best practices be followed since flammability is a consideration. The following procedure shall be adhered to:

-Safely remove refrigerant following local and national regulations.

-Evacuate the circuit.

-Purge the circuit with inert gas.

-Evacuate.

-Purge the circuit with inert gas.

-Open the circuit

The refrigerant charge shall be recovered into the correct recovery cylinders if venting is not allowed by local and national codes. For appliances containing flammable refrigerants, the system shall be purged with oxygen-free nitrogen to render the appliance safe for flammable refrigerants. This process might need to be repeated several times. Compressed air or oxygen shall not be used for purging refrigerant systems. Refrigerants purging shall be achieved by breaking the vacuum in the system with oxygen-free nitrogen and continuing to fill until the working pressure is achieved, then venting to atmosphere, and finally pulling down to a vacuum. This process shall be vented down to atmospheric pressure to enable work to take place. Ensure that the outlet for the vacuum pump is not close to any potential ignition sources and that ventilation is available.

⚠ WARNING

To prevent serious injury or death:

1- Lock-out. tag-out before performing maintenance.

2- If system power is required (e.g., smoke detector maintenance), disable power to blower, remove fan belt where applicable, and ensure all controllers and thermostats are set to the OFF position before performing maintenance.

3- Always keep hands, hair, clothing, jewelery, tools, etc., away from moving parts.

LGX/LCX180S, 210S Unit Dimensions - Inches (mm) - Gas Heat Section Shown

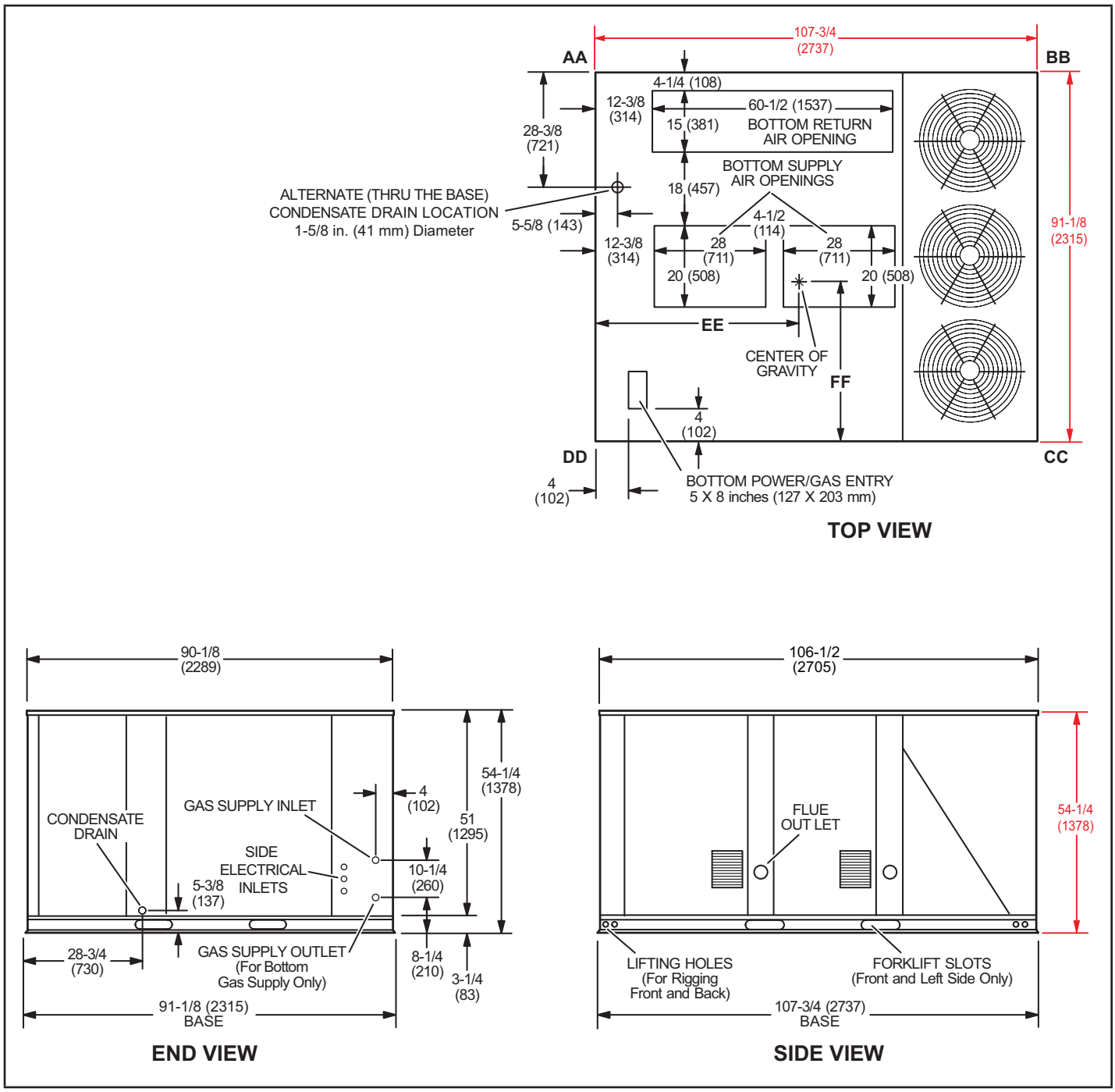

LGX/LCX240S Unit Dimensions - Inches (mm) - Gas Heat Section Shown

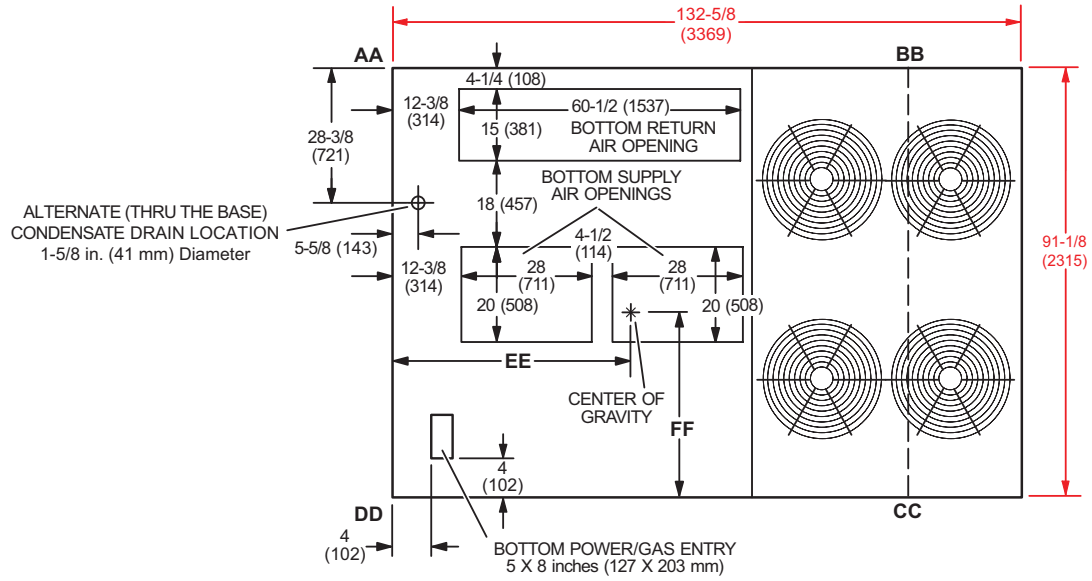

TOP VIEW

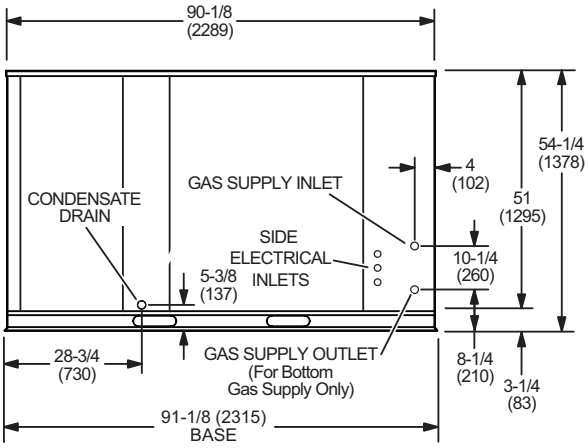

END VIEW

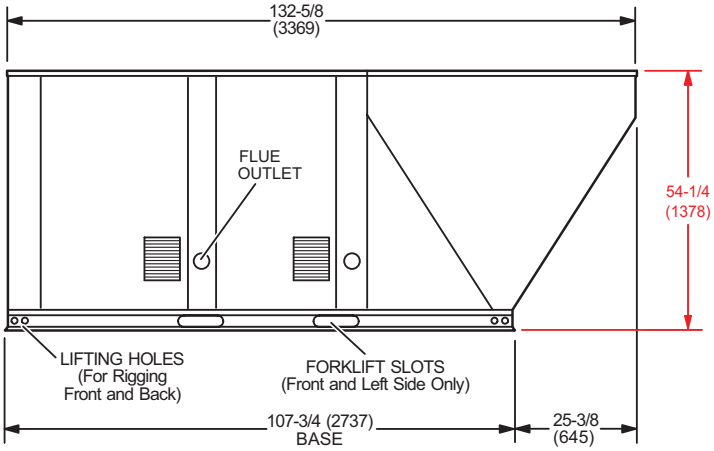

SIDE VIEW

LGX/LCX300S Unit Dimensions - Inches (mm) - Gas Heat Section Shown

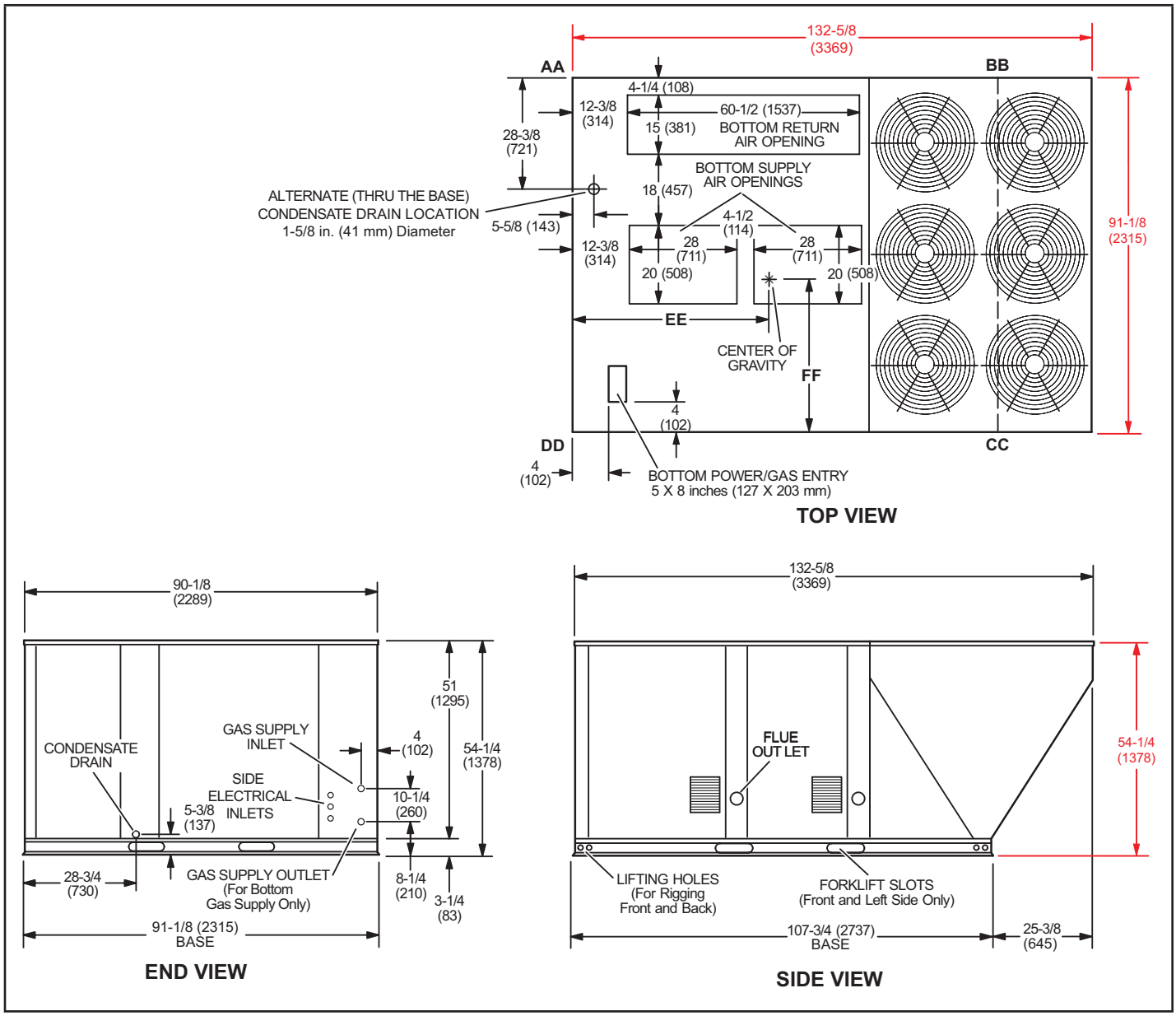

LGX 180, 210, 240, 300 Parts Arrangement

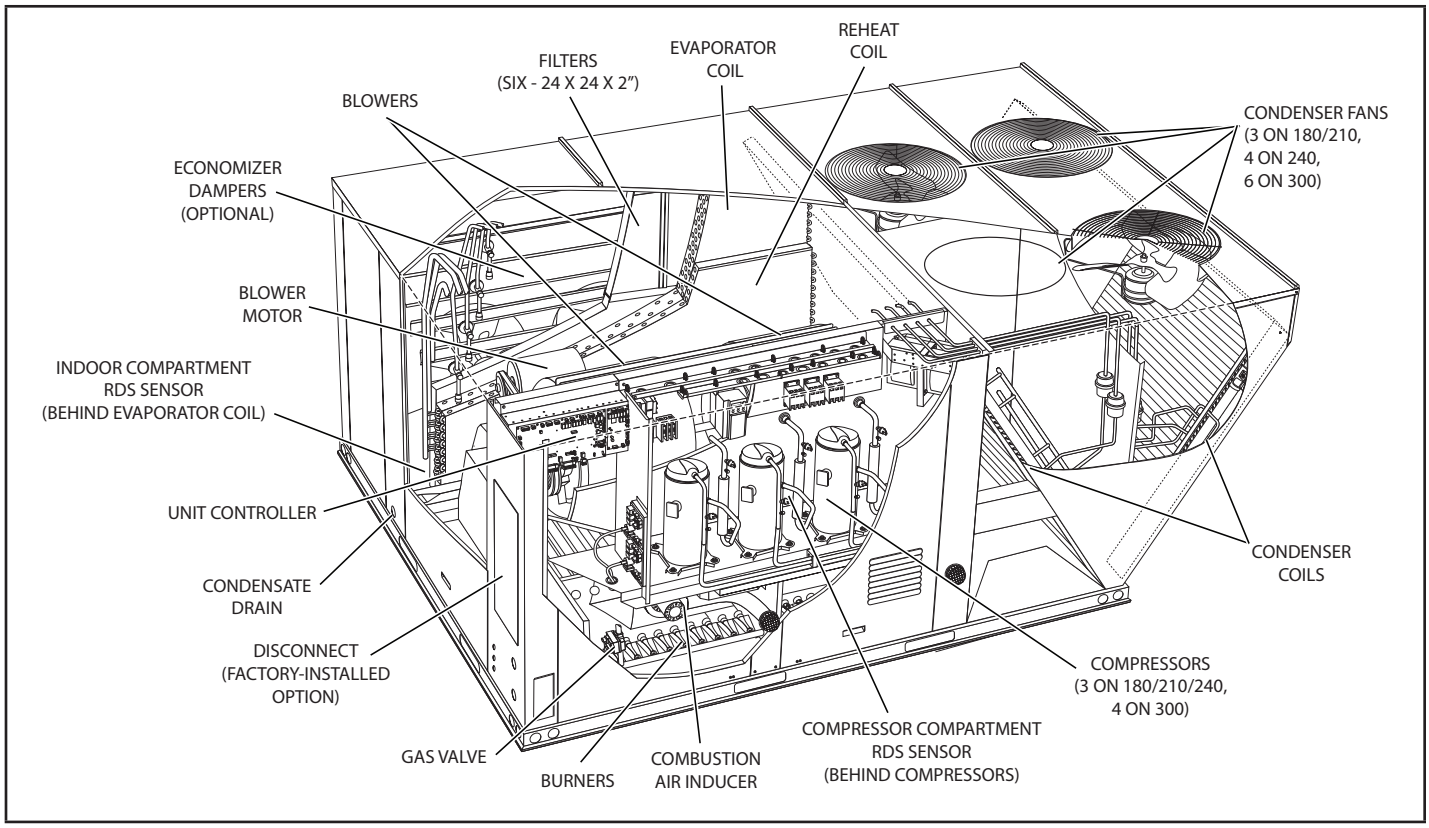

LCX 180, 210, 240, 300 Parts Arrangement

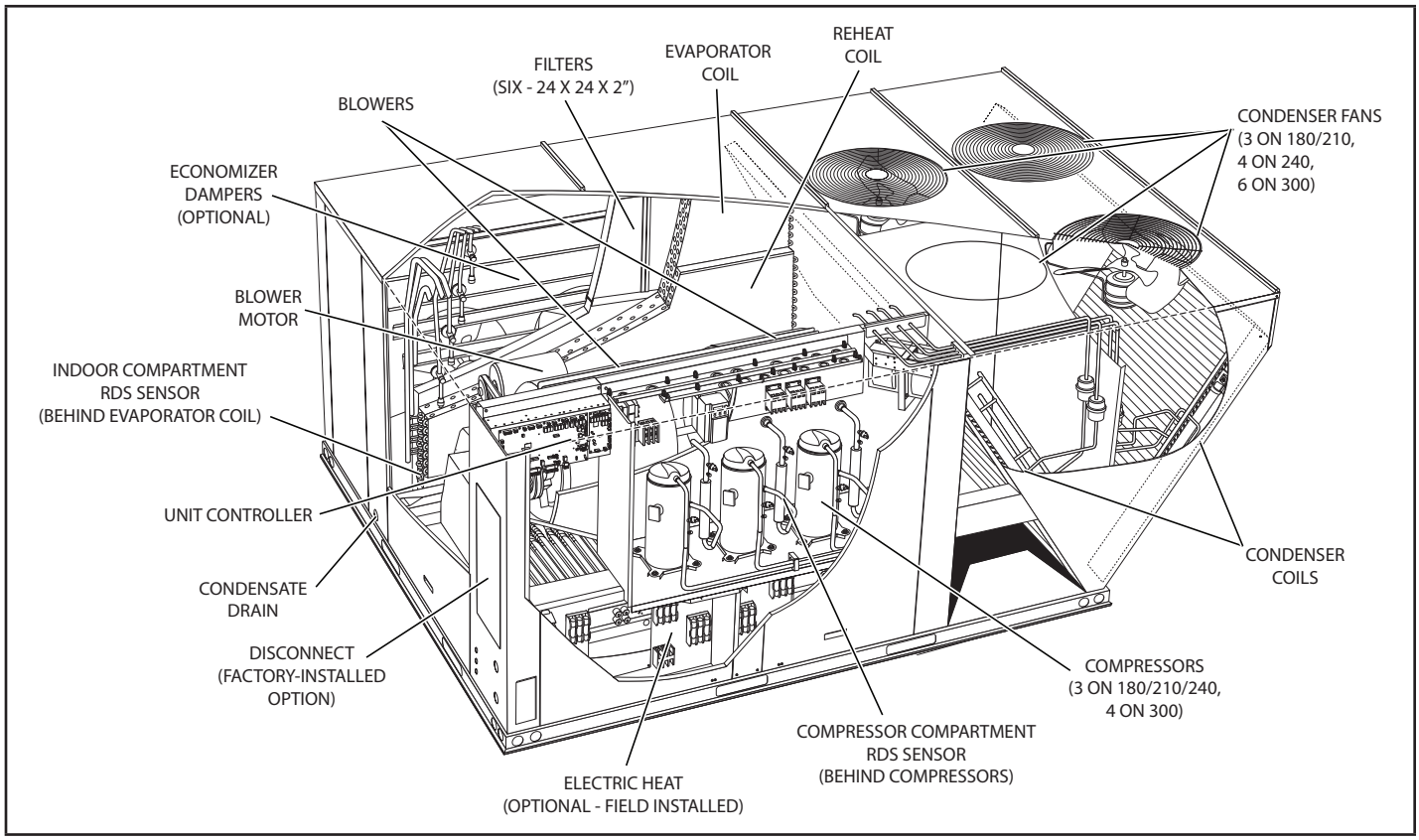

Shipping and Packing List

Package 1 of 1 contains:

1 - Assembled unit

Check unit for shipping damage. Receiving party should contact last carrier immediately if shipping damage is found.

General

These instructions are intended as a general guide and do not supersede local codes in any way. Authorities having jurisdiction should be consulted before installation.

The LGX180, 210, 240, & 300 gas/electric packaged rooftop units are available in 260,000, 360,000, or 480,000 Btuh heating inputs.

The LCX cooling packaged rooftop unit is the same basic design as the LGX unit except for the heating section. Optional electric heat is field-installed in LCX units.

LGX and LCX units have identical refrigerant circuits with respective 15, 17-1/2, 20 and 25 ton cooling capacities. 180, 210, and 240 units contain 3 compressors; all are fixed speed. 300 units contain four compressors; all are fixed speed compressors.

Units come standard with a factory-installed, all-aluminum condenser coil.

Units use R454B, an ozone-friendly HFC refrigerant. Refer to the Cooling Start-Up section for precautions when installing unit.

⚠ WARNING

Electric shock hazard and danger of explosion. Can cause injury, death or product or property damage. Turn off gas and electrical power to unit before performing any maintenance or servicing operations on the unit. Follow lighting instructions attached to unit when putting unit back into operation and after service or maintenance.

Requirements

See FIGURE 1 for unit clearances.

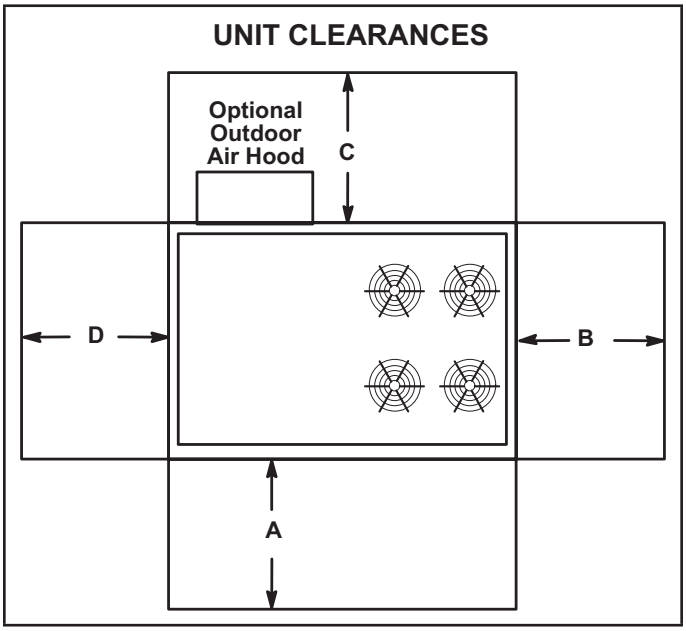

FIGURE 1

[1]Unit Clearance	A in.(mm)	B in.(mm)	C in.(mm)	D in.(mm)	Top Clearance
Service Clearance	60 (1524)	36 (914)	36 (914)	66 (1676)	Unob-structed
Clearance to Combusti-bles	36 (914)	1 (25)	1 (25)	1 (25)	Unob-structed
Minimum Operation Clearance	36 (914)	36 (914)	36 (914)	41 (1041)	Unob-structed

NOTE - *Entire perimeter of unit base requires support when elevated above mounting surface*.

[1]**Service Clearance** - Required for removal of serviceable parts
Clearance to Combustibles - Required clearance to combustible material (gas units). On LCX units, see clearance to combustible materials on heater rating plate.
Minimum Operation Clearance - Required clearance for proper unit operation.

Minimum R454B Space and CFM Requirements

Minimum Airflow[1]		
Unit	Q_{min}(CFM)	Q_{min}(m^3h)
LGX/LCX180	177	300
LGX/LCX210	207	351
LGX/LCX240	192	326
LGX/LCX300	157	267
LGX/LCX180 W/ Humidtrol	165	281
LGX/LCX210 W/ Humidtrol	165	281
LGX/LCX240 W/ Humidtrol	202	342
LGX/LCX300 W/ Humidtrol	183	312

[1] ***NOTE -*** *The minimum airflow is the lowest CFM allowed during venting operation (leak mitigation).*

Minimum Room Area of Conditioned Space[2]		
Unit	TA_{min}(ft^2)	TA_{min}(m^2)
LGX/LCX180	98	9.10
LGX/LCX210	115	10.63
LGX/LCX240	107	9.87
LGX/LCX300	88	8.08
LGX/LCX180 W/ Humidtrol	92	8.51
LGX/LCX210 W/ Humidtrol	92	8.51
LGX/LCX240 W/ Humidtrol	112	10.38
LGX/LCX300 W/ Humidtrol	102	9.44

[2] ***NOTE -*** *The minimum room area of conditioned space is the smallest area the unit can service.*

Refrigerant Charge R-454B		
Unit	M_c(lbs)	M_c(kg)
LGX/LCX180 STG 1	5.19	2.35
LGX/LCX180 STG 2	5.38	2.44
LGX/LCX180 STG 3	6.19	2.81
LGX/LCX210 STG 1	5.13	2.32
LGX/LCX210 STG 2	5.13	2.32
LGX/LCX210 STG 3	4.81	2.18
LGX/LCX240 STG 1	6.25	2.83
LGX/LCX240 STG 2	6.19	2.81
LGX/LCX240 STG 3	5.94	2.69
LGX/LCX300 STG 1	5.56	2.52
LGX/LCX300 STG 2	5.63	2.55
LGX/LCX300 STG 3	5.75	2.61
LGX/LCX300 STG 4	5.75	2.61
LGX/LCX180 STG 1 W/ Humidtrol	6.25	2.83
LGX/LCX180 STG 2 W/ Humidtrol	6.00	2.72
LGX/LCX180 STG 3 W/ Humidtrol	5.75	2.61
LGX/LCX210 STG 1 W/ Humidtrol	6.25	2.83
LGX/LCX210 STG 2 W/ Humidtrol	6.25	2.83
LGX/LCX210 STG 3 W/ Humidtrol	5.94	2.69
LGX/LCX240 STG 1 W/ Humidtrol	7.63	3.46
LGX/LCX240 STG 2 W/ Humidtrol	7.25	3.29
LGX/LCX240 STG 3 W/ Humidtrol	6.94	3.15
LGX/LCX300 STG 1 W/ Humidtrol	6.94	3.15
LGX/LCX300 STG 2 W/ Humidtrol	6.31	2.86
LGX/LCX300 STG 3 W/ Humidtrol	4.69	2.13
LGX/LCX300 STG 4 W/ Humidtrol	5.19	2.35

Altitude Adjustment Factor[3]									
Halt	0	200	400	600	800	1000	1200	1400	1600
AF	1	1	1	1	1.02	1.05	1.04	1.1	1.12
Halt	1600	1800	2000	2200	2400	2600	2800	3000	3200
AF	1.12	1.15	1.18	1.21	1.25	1.28	1.32	1.36	1.4

[3] ***NOTE -*** *Use the Altitude Adjustment Factor to adjust the values in the tables above to different altitudes. Find the relevant altitude above sea level in the two "Halt" rows and then multiply the value needed from the tables above by the altitude factor number. Example: For the minimum airflow in CFM for an LGX/LCX180 at 1000 ft. above see level, multiply 177 by 1.05 to get 185.85 CFM as the new Q_{min}.*

⚠ NOTICE

Roof Damage!

This system contains both refrigerant and oil. Some rubber roofing material may absorb oil, causing the rubber to swell. Bubbles in the rubber roofing material can cause leaks. Protect the roof surface to avoid exposure to refrigerant and oil during service and installation. Failure to follow this notice could result in damage to roof surface.

Use of this unit as a construction heater or air conditioner is not recommended during any phase of construction. Very low return air temperatures, harmful vapors and operation of the unit with clogged or misplaced filters will damage the unit.

If this unit has been used for heating or cooling of buildings or structures under construction, the following conditions must be met or the warranty will be void:

- The vent hood must be installed per these installation instructions.
- A room thermostat must control the unit. The use of fixed jumpers that will provide continuous heating or cooling is not allowed.
- A pre-filter must be installed at the entry to the return air duct.
- The return air duct must be provided and sealed to the unit.
- Return air temperature range between 55°F (13°C) and 80°F (27°C) must be maintained.
- Air filters must be replaced and pre-filters must be removed upon construction completion.
- The input rate and temperature rise must be set per the unit rating plate.
- The heat exchanger, components, duct system, air filters and evaporator coil must be thoroughly cleaned following final construction clean-up.
- The unit operating conditions (including airflow, cooling operation, ignition, input rate, temperature rise and venting) must be verified according to these installation instructions.

This appliance is not intended for use by persons (including children) with reduced physical, sensory, or mental capabilities, or lack of experience and knowledge, unless they have been given supervision or instruction concerning use of the appliance by a person responsible for their safety.

⚠ IMPORTANT

The Clean Air Act of 1990 bans the intentional venting of refrigerant (CFC's and HCFC's) as of July 1, 1992. Approved methods of recovery, recycling or reclaiming must be followed. Fines and/or incarceration may be levied for non-compliance.

Unit Support

In downflow discharge installations, install the unit on a non-combustible surface only. Unit may be installed on combustible surfaces when used in horizontal discharge applications or in downflow discharge applications when installed on an C1CURB14C roof mounting frame.

NOTE - *Securely fasten roof frame to roof per local codes.*

⚠ CAUTION

To reduce the likelihood of supply / return air bypass and promote a proper seal with the RTU, duct work / duct drops / diffuser assemblies must be supported independently to the building structure.

A-Downflow Discharge Application

Roof Mounting with C1CURB

1 - The C1CURB roof mounting frame must be installed, flashed and sealed in accordance with the instructions provided with the frame.

2 - The C1CURB roof mounting frame should be square and level to 1/16" per linear foot (5mm per linear meter) in any direction.

3 - Duct must be attached to the roof mounting frame and not to the unit; supply and return plenums must be installed before setting the unit.

Installer's Roof Mounting Frame

Many types of roof frames can be used to install the unit depending upon different roof structures. Items to keep in mind when using the building frame or supports are:

1 - The base is fully enclosed and insulated, so an enclosed frame is not required.

2 - The frames or supports must be constructed with non-combustible materials and should be square and level to 1/16" per linear foot (5mm per linear meter) in any direction.

3 - Frame or supports must be high enough to prevent any form of moisture from entering unit. Recommended minimum frame height is 14" (356mm).

4 - Duct must be attached to the roof mounting frame and not to the unit. Supply and return plenums must be installed before setting the unit.

5 - Units require support along all four sides of unit base. Supports must be constructed of steel or suitably treated wood materials.

NOTE - *When installing a unit on a combustible surface for downflow discharge applications, an* C1CURB14C *roof mounting frame is required.*

B-Horizontal Discharge Applications

1 - Units installed in horizontal airflow applications must use an C1CURB14C horizontal roof mounting frame. The supply air duct connects to the horizontal supply air opening on the C1CURB14C. The return air duct connects to the unit horizontal return air opening. Refer to unit dimensions.

2 - Specified installation clearances must be maintained when installing units. Refer to FIGURE 1.

3 - Top of support slab should be approximately 4" (102mm) above the finished grade and located so no run-off water from higher ground can collect around the unit.

4 - Units require support along all four sides of unit base. Supports must be constructed of steel or suitably treated wood materials.

Duct Connection

All exterior ducts, joints and openings in roof or building walls must be insulated and weather-proofed with flashing and sealing compounds in accordance with applicable codes. Any duct passing through an unconditioned space must be insulated.

⚠ CAUTION

In downflow applications, do not drill or punch holes in base of unit. Leaking in roof may occur if unit base is punctured.

Rigging for Lifting

Rig unit for lifting by attaching four cables to holes in unit base rail. See FIGURE 2.

1 - Detach wooden base protection before rigging.

2 - Connect rigging to the unit base using both holes in each corner.

3 - All panels must be in place for rigging.

4 - Place field-provided H-style pick in place just above top edge of unit. Frame must be of adequate strength and length. (H-style pick prevents damage to unit.)

RIGGING

Unit	Weight			
	Non-Reheat		Reheat	
	lbs	kg	lbs	kg
LGX/LCX180	2299	1043	2404	1090
LGX/LCX210	2470	1121	2574	1168
LGX/LCX240	2639	1197	2746	1246
LGX/LCX300	2839	1288	2950	1338

* Maximum wieght with all available factory-installed accessories.

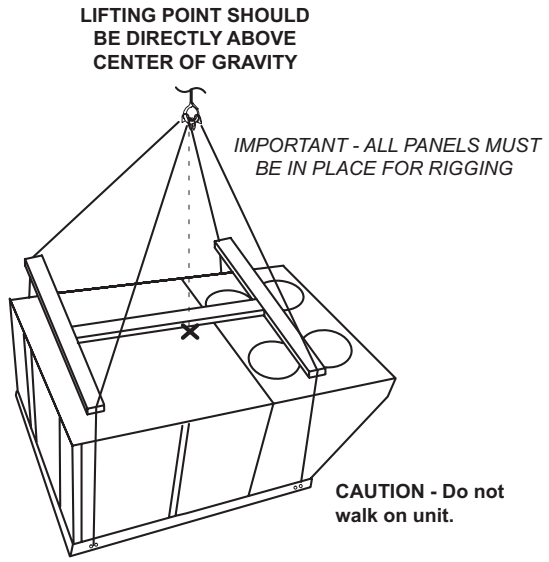

FIGURE 2

Condensate Drains

Remove cap and make drain connection to the 1" N.P.T. drain coupling provided on unit. A trap must be installed between drain connection and an open vent for proper condensate removal. See FIGURE 3. It is sometimes acceptable to drain condensate onto the roof or grade; however, a tee should be fitted to the trap to direct condensate downward. The condensate line must be vented. Check local codes concerning condensate disposal. Refer to page 4, page 5, page 6 and page 7 for condensate drain location.

NOTE - *The drain pan is made with a glass reinforced engineered plastic capable of withstanding typical joint torque but can be damaged with excessive force. Tighten pipe nipple hand tight and turn an additional quarter turn.*

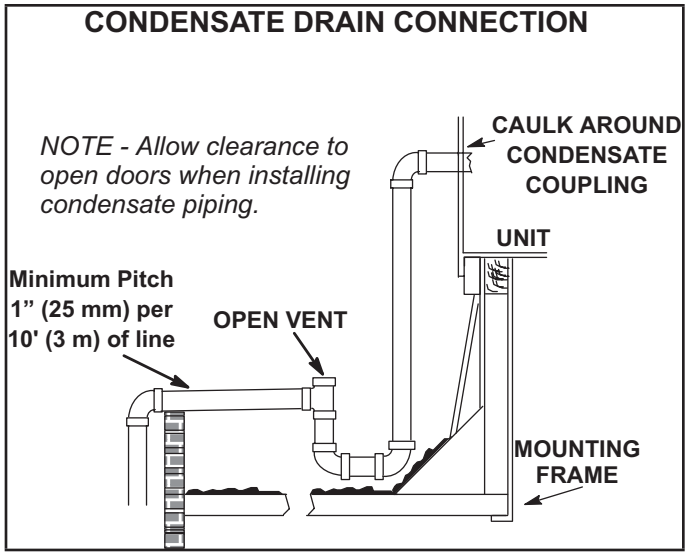

FIGURE 3

Connect Gas Piping

Before connecting piping, check with gas company or authorities having jurisdiction for local code requirements. When installing gas supply piping, length of run from gas meter must be considered in determining pipe size for 0.5" w.c. (.12kPa) maximum pressure drop. Do not use supply pipe smaller than unit gas connection. For natural gas units, operating pressure at the unit gas connection must be a minimum of 4.7" w.c. (1.17kPa) and a maximum of 10.5" (2.60kPa) w.c. For LP/propane gas units, operating pressure at the unit gas connection must be a minimum of 11" w.c. (2.74kPa) and a maximum of 13.5" w.c. (3.36kPa).

When making piping connections a drip leg should be installed on vertical pipe runs to serve as a trap for sediment or condensate. A 1/8" N.P.T. plugged tap is located on gas valve for test gauge connection. Refer to Heating Start-Up section for tap location. Install a ground joint union between the gas control manifold and the main manual shut-off valve. See FIGURE 4 for gas supply piping entering outside the unit. See FIGURE 5 for gas supply entering through bottom of unit.

Compounds used on threaded joints of gas piping shall be resistant to the action of liquefied petroleum gases.

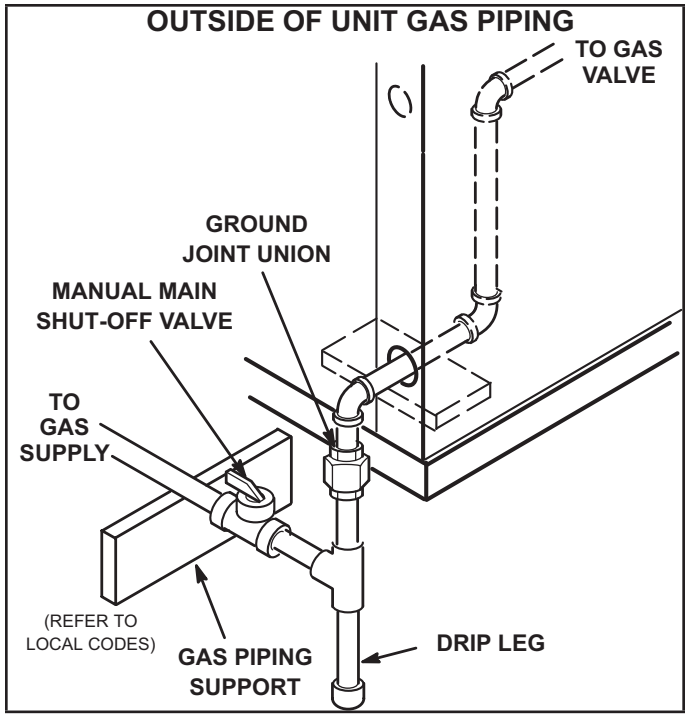

FIGURE 4

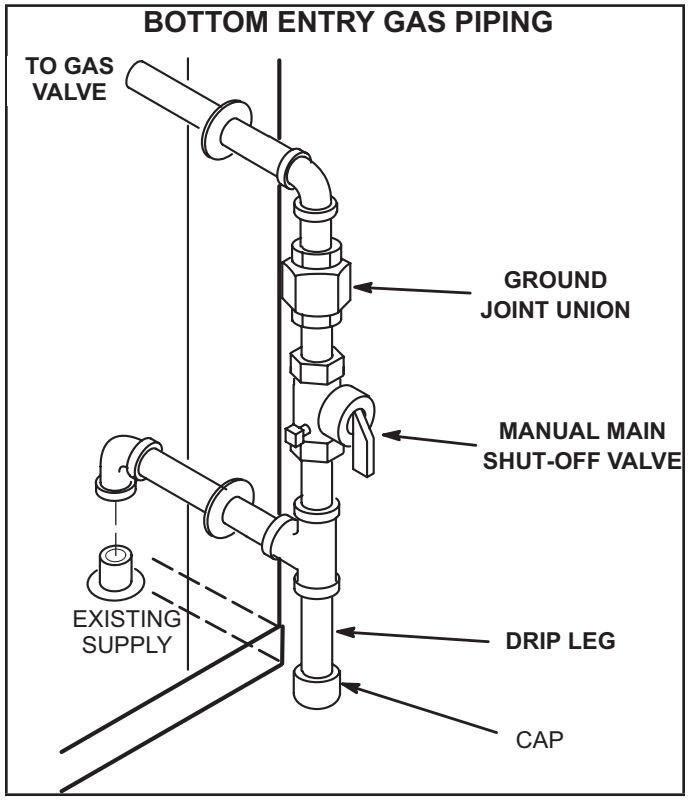

FIGURE 5

Pressure Test Gas Piping

When pressure testing gas lines, the gas valve must be disconnected and isolated. Gas valves can be damaged if subjected to more than 0.5 psig (3.48kPa). See FIGURE 6.

NOTE - Codes may require that manual main shut-off valve and union (furnished by installer) be installed in gas line external to unit. Union must be of the ground joint type.

After all connections have been made, check all piping connections for gas leaks. Also check existing unit gas connections up to the gas valve; loosening may occur during installation. Use a leak detection solution or other preferred means. Do not use matches, candles, or other sources of ignition to check for gas leaks.

***NOTE -** In case emergency shut down is required, turn off the main manual shut-off valve and disconnect main power to unit. These devices should be properly labeled by the installer.*

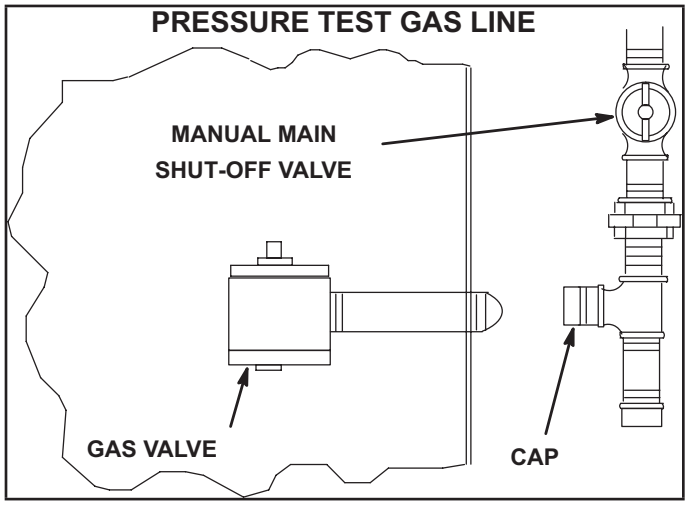

FIGURE 6

⚠ CAUTION

Some soaps used for leak detection are corrosive to certain metals. Carefully rinse piping thoroughly after leak test has been completed. Do not use matches, candles, flame or othe sources of ignition to check for gas leaks.

⚠ WARNING

Danger of explosion. Can cause injury or product or property damage. Do not use matches, candles, flame or other sources of ignition to check for leaks.

High Altitude Derate

Locate the high altitude conversion sticker in the unit literature bag. Fill out the conversion sticker and affix next to the unit nameplate. High altitude kits are available for field-installation.

Refer to TABLE 1 for high altitude adjustments.

TABLE 1
HIGH ALTITUDE DERATE

Unit	Altitude Ft.*	Gas Manifold Pressure
2000-4500	2000-4500	See Unit Nameplate
169 KBtuh	4500 & Above	Derate 2% / 1000 Ft. Above Sea Level
260-380 KBtuh	4500 & Above	Derate 4% / 1000 Ft. Above Sea Level

*Units installed at 0-2000 feet do not need to be modified

***NOTE -** This is the only permissible derate for these units.*

Electrical Connections - Power Supply

A-Wiring

Route field wiring in conduit between bottom power entry and disconnect. See FIGURE 7. This does not supersede local codes or authorities having jurisdiction.

Do not apply power or close disconnect switch until installation is complete. Refer to start-up directions. Refer closely to unit wiring diagram.

Refer to unit nameplate for minimum circuit ampacity and maximum fuse size.

1 - Units are factory-wired for 240/460/575 volt supply. For 208V supply, remove the insulated terminal cover from the 208V terminal on the control transformer. Move the wire from the transformer 240V terminal to the 208V terminal. Place the insulated terminal cover on the unused 240V terminal.

2 - Route power through the bottom power entry area and connect to line side of unit disconnect, circuit breaker or terminal block. See unit wiring diagram.

3 - Units With Optional 120v GFCI Outlet

Route and connect separate 120v wiring to GFCI outlets. Route field wiring in conduit between bottom power entry and GFCI. See FIGURE 7.

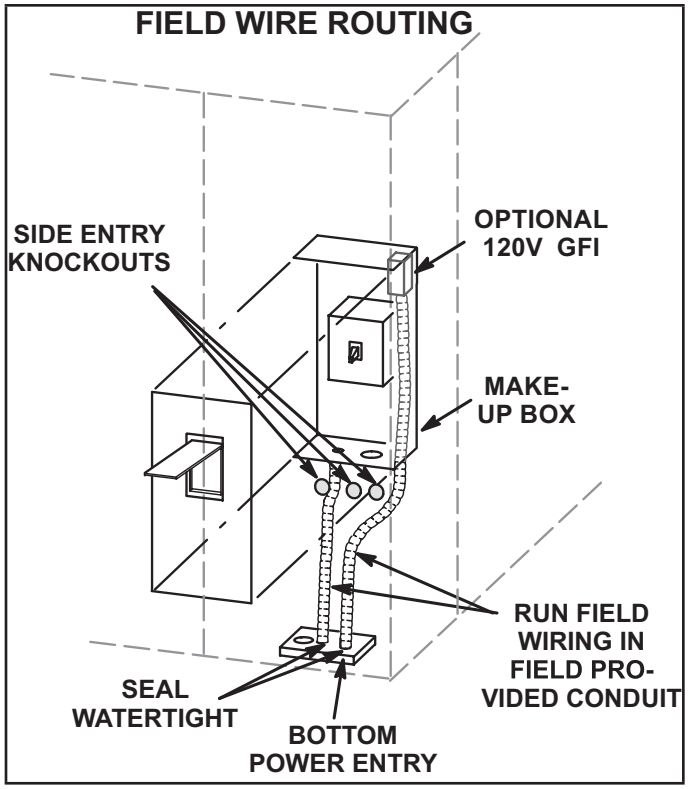

FIGURE 7

B-Unbalanced Three-Phase Voltage

Units equipped with an inverter (VFD) are designed to operate on balanced, three-phase power. Operating units on unbalanced three-phase power will reduce the reliability of all electrical components in the unit. Unbalanced power is a result of the power delivery system supplied by the local utility company.

Factory-installed inverters are sized to drive blower motors with an equivalent current rating using balanced three-phase power. When unbalanced three-phase power is supplied; the installer must replace the existing factory-installed inverter with an inverter that has a higher current rating to allow for the imbalance. Use TABLE 2 to determine the appropriate replacement inverter.

TABLE 2
INVERTER UP-SIZING

Factory-Installed Inverter HP	Replacement Inverter HP
2	5
3	7-1/2
5	10
7.5	15
10	20

Electrical Connections - Control Wiring

Connect either a thermostat, room/zone sensor, or direct digital controller; one of the three are required for unit function. Refer to the literature provided with each device and the following information.

NOTE - *Optional wireless sensors are available for use with this unit.*

A-Thermostat Location

Room thermostat mounts vertically on a standard 2” X 4” handy box or on any non-conductive flat surface.

Locate thermostat approximately 5 feet (1524mm) above the floor in an area with good air circulation at average temperature. Avoid locating the room thermostat where it might be affected by:

- drafts or dead spots behind doors and in corners
- hot or cold air from ducts
- radiant heat from sun or appliances
- concealed pipes and chimneys

B-Wire Routing

Route thermostat cable or wires from subbase through knockout provided in unit. Use 18 AWG wire for all applications using remotely installed electro-mechanical and electronic thermostats.

On hot gas reheat units, route wires from RH sensor or remote switch through knockout provided in unit. For sensor installations, use 22AWG stranded, two twisted pairs, individually shielded, 100% aluminum shield with drain wire and Teflon jacket.

IMPORTANT - Unless field thermostat wires are rated for maximum unit voltage, they must be routed away from line voltage wiring.

C-Wire Connections

The Unit Controller will operate the unit from a thermostat or zone sensor based on the System Mode. The default System Mode is the thermostat mode. Refer to the Unit Controller Setup Guide to change the System Mode. Use the mobile service app menu and select:

SETTINGS > INSTALL

NOTE - *Unit Controller is capable of up to four stages of cooling in network control mode.*

1 - **Default Thermostat Mode**

The Unit Controller will operate two stages of heating and cooling based on thermostat demands. Install thermostat assembly in accordance with instructions provided with thermostat. See FIGURE 8 for field wiring and refer to wiring diagrams on unit.

IMPORTANT - Terminal connections at the wall plate or subbase must be made securely. Loose control wire connections may result in intermittent operation.

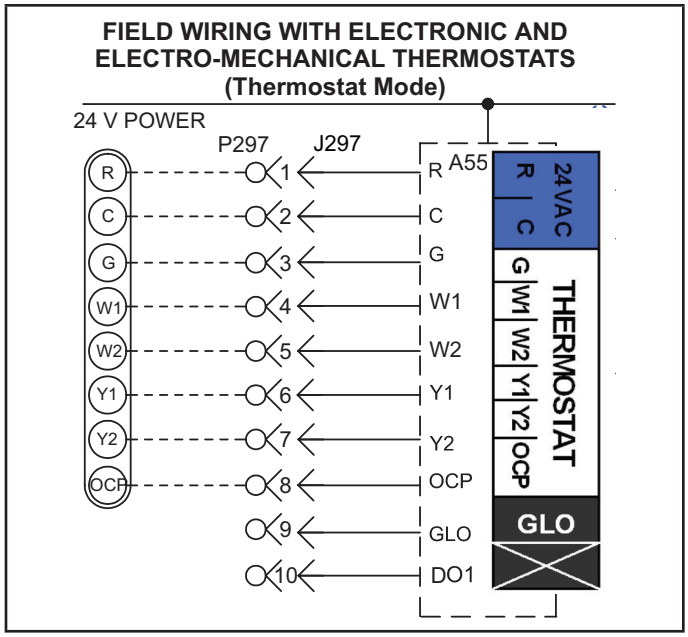

FIGURE 8

2 - **Zone Sensor Mode**

The Unit Controller will operate heating and cooling based on the Unit Controller internal setpoints and the temperature from the A2 zone sensor. An optional Network Control Panel (NCP) can also be used to provide setpoints. A thermostat or return air sensor can be used as a back-up mode. Make zone sensor wiring connections as shown in FIGURE 9.

NOTE - *Install sensor and make communication wiring connections as shown in literature provided with sensor.*

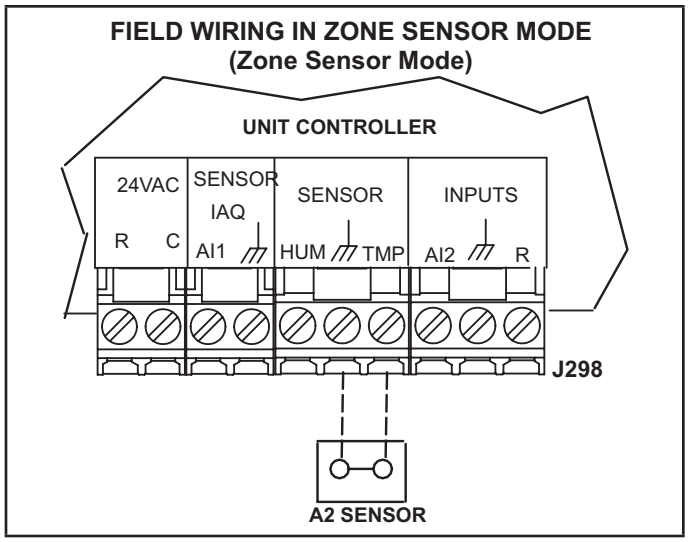

FIGURE 9

D-Hot Gas Reheat Units Only

1 - Install humidity sensor in accordance with instructions provided with sensor. A DDC input may be used to initiate dehumidification instead of a sensor.

2 - Make wiring connections as shown in FIGURE 8 for Thermostat Mode and FIGURE 9 for Zone Sensor Mode. In addition, connect either a humidity sensor or a dehumidification input. See FIGURE 10 or FIGURE 11 for humidity sensor wiring and FIGURE 12 for dehumidification input wiring.

Humidity Sensor Cable Applications

Wire runs of 50 feet (mm) or less:

Use two separate shielded cables containing 20AWG minimum, twisted pair conductors with overall shield. Belden type 8762 or 88760 (plenum) or equivalent. Connect both cable shield drain wires to TB1-7 as shown in FIGURE 10.

Wire runs of 150 feet (mm) or less:

Use two separate shielded cables containing 18AWG minimum, twisted pair conductors with overall shield. Belden type 8760 or 88760 (plenum) or equivalent. Connect both cable shield drain wires to TB1-7 as shown in FIGURE 10.

Wire runs over 150 feet (mm):

Use a local, isolated 24VAC transformer such as Lennox cat #18M13 (20VA minimum) to supply power to RH sensor as shown in FIGURE 11. Use two shielded cables containing 20AWG minimum, twisted pair conductors with overall shield. Belden type 8762 or 88760 (plenum) or equivalent.

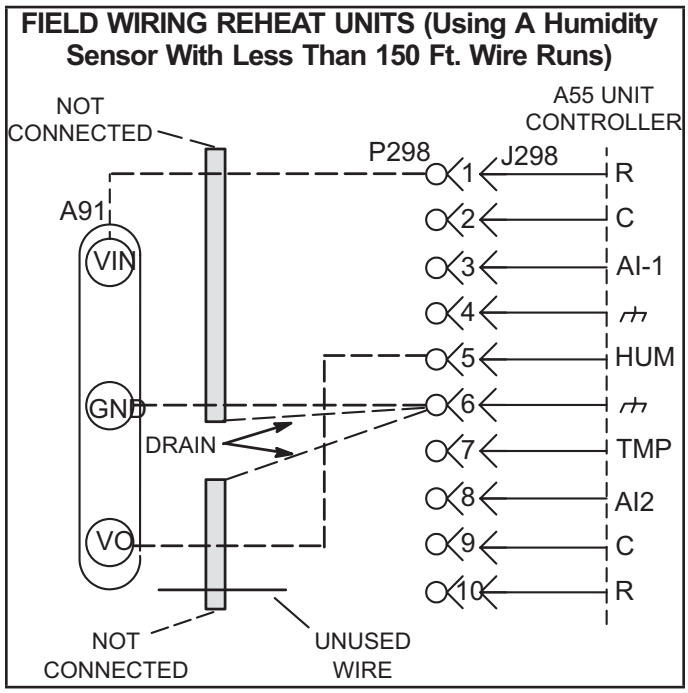

FIGURE 10

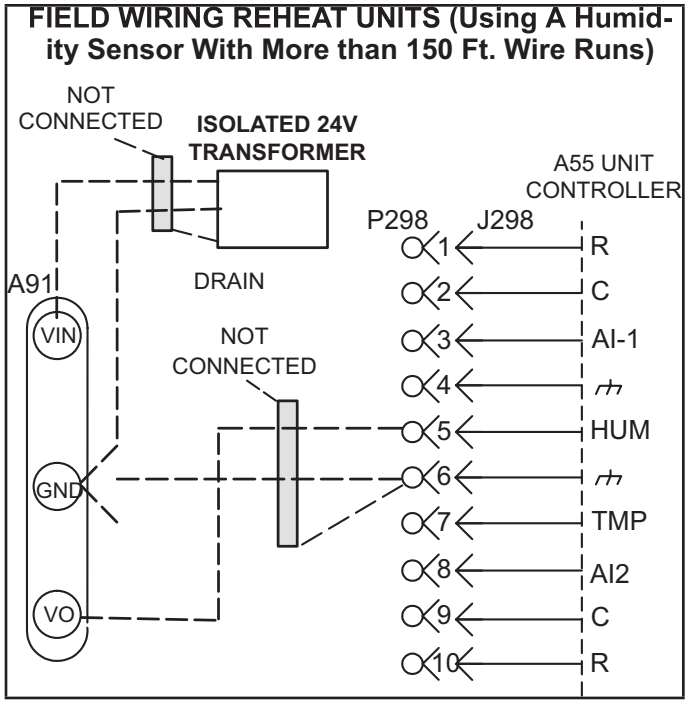

FIGURE 11

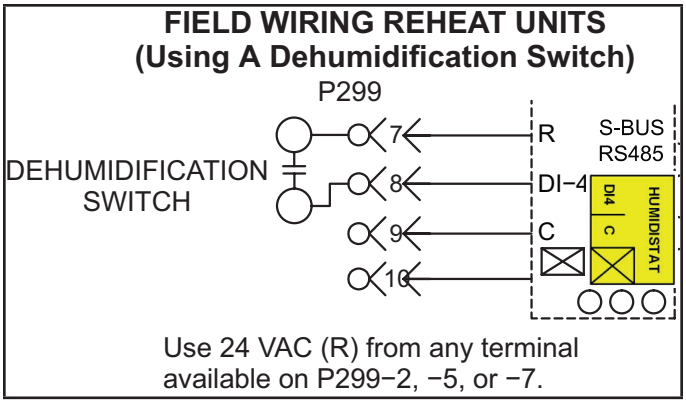

FIGURE 12

Mobile Service App

Setup and configure each rooftop unit using the mobile service app (Android or iOS devices supported).

A-Mobile Device Requirements

- Bluetooth connection.
- Android hardware requires 2GB RAM and a 2Ghz core processor. Tablets are supported.
- The app is available for both iOS 11.0 or higher (App Store) and Android 9.0 or higher (Google Play).

B-Download the App

Use your mobile device to scan the QR code from the cover page and download the mobile service app to your mobile device.

C-Pair the App to the Unit Controller

1 - Apply power to the unit and wait until the Unit Controller has booted-up (approximately two minutes).

2 - Press and hold the pair button for five seconds.

3 - The unit (or list of units) will appear; select the appropriate unit. When the app code matches the four-character code on the Unit Controller display, the unit is paired (within 10 seconds). Note the following:

- The app will list the units by signal strength; the RTU name will be displayed.
- Once paired, the RTU name, model number, serial number and firmware version will be displayed.

Please refer to the manufacturer's website for additional technical information and self-help support.

D-App Menus

See FIGURE 13 for the menu overview. Follow the app prompts in the Install, Network Integration, and Test and Balance menus. Verify the app is setup properly for the unit application (including the date and time). Refer to FIGURE 14, FIGURE 15, and FIGURE 16.

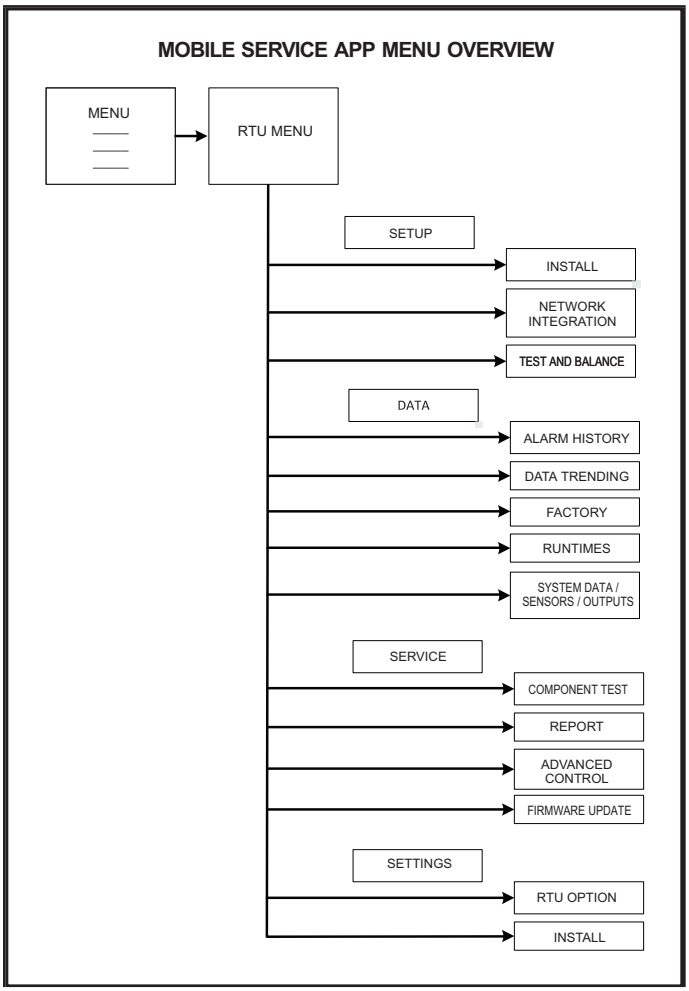

FIGURE 13

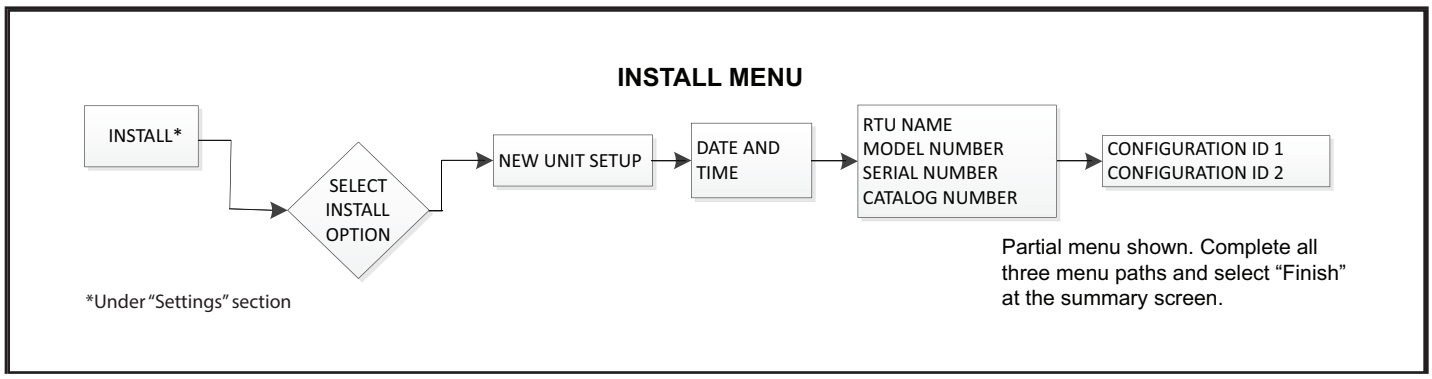

FIGURE 14

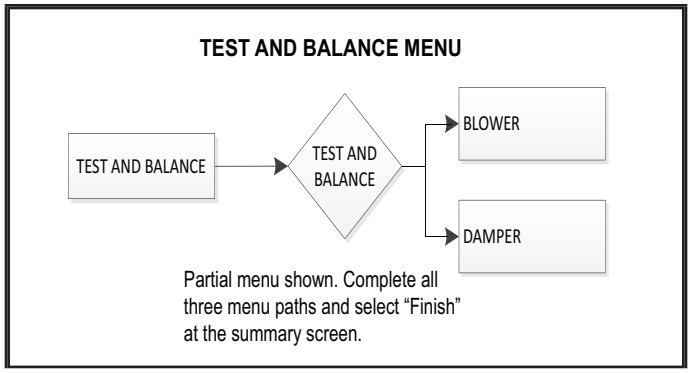

FIGURE 15

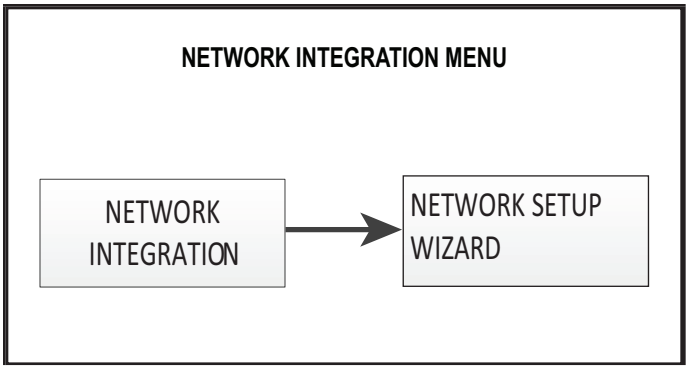

FIGURE 16

E-Unit Controller Components

See FIGURE 17 for Unit Controller components. See FIGURE 18 and TABLE 3 for pushbutton and LED functions.

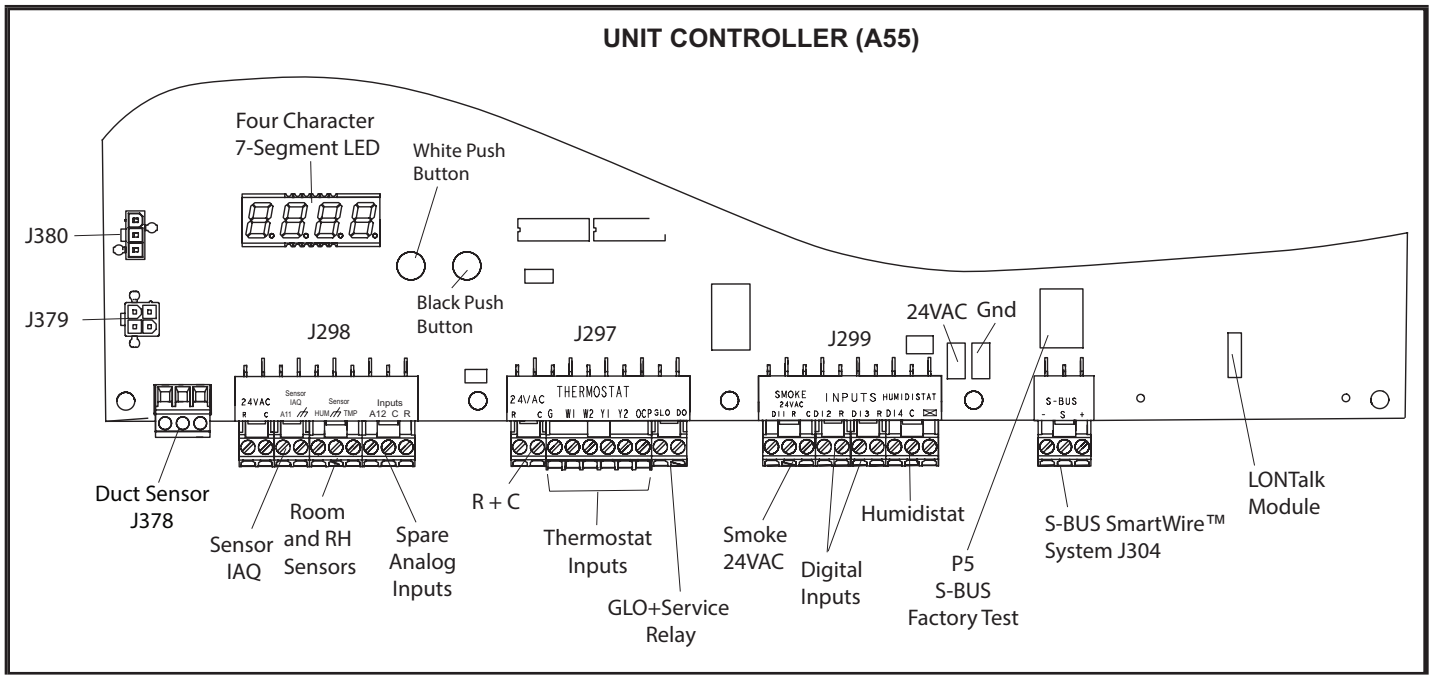

FIGURE 17

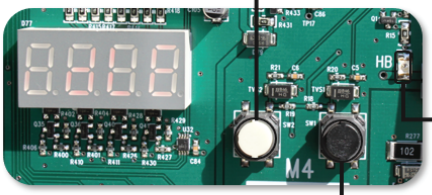

TEST BUTTON

* Short press will put the unit into test mode - tESt
* Long press will put the unit into setup mode for two-stage thermostate - StAt

HB LED – blinks while M4 is powered

RESET BUTTON

* Short press will clear unit delays (lockouts) - CLdL
* Long press will reset the M4 Unit Controller - rSt

* Short press is about 2 to 5 seconds in duration.
* Long press is about 5 to 8 seconds in duration

**Short Press (2 – 5 Seconds), Long Press (5 – 10 seconds)*

FIGURE 18

TABLE 3

UNIT CONTROLLER PUSHBUTTON CODES

Code	Cause	Action
CLdL	Black Button: Short Press	Clear Delays
rSt	Black Button: Long Press	Reset
tESt	White Button: Short Press	TSTAT Test
StAt	White Button: Long Press (In Pre-Install state)	TSTAT Override
tESt	White Button: Long Press (NOT in Pre-Install State)	TSTAT Test
Short Press : 2 to 5 seconds. Long Press : 5 to 8 seconds.		

Blower Operation and Adjustments

Supply Air Staged Units - The blower rotation will always be correct on units equipped with an inverter. Checking blower rotation is not a valid method of determining voltage phasing for incoming power.

Supply Air Staged Units and Units Equipped With Optional Voltage or Phase Detection - The Unit Controller checks the incoming power during start-up. If the voltage or phase is incorrect, the Unit Controller will display an alarm and the unit will not start.

A-Blower Operation

Refer to the Unit Controller Setup Guide to energize blower. Use this mobile service app menu:

SERVICE > TEST > BLOWER

Instructions provided with the thermostat may also be used to initiate blower only (G) demand. Unit will cycle on thermostat demand. The following steps apply to applications using a typical electro-mechanical thermostat.

1 - Blower operation is manually set at the thermostat subbase fan switch. With fan switch in **ON** position, blowers will operate continuously.

2 - With fan switch in **AUTO** position, the blowers will cycle with demand. Blowers and entire unit will be off when system switch is in **OFF** position.

⚠ IMPORTANT

Three Phase Scroll Compressor Voltage Phasing

Three phase scroll compressors must be phased sequentially to ensure correct compressor and blower* rotation and operation. Compressor and blower are wired in phase at the factory. Power wires are color-coded as follows: line 1-red, line 2-yellow, line 3-blue.

1- Observe suction and discharge pressures and blower* rotation on unit start-up.

2- Suction pressure must drop, discharge pressure must rise, and blower* rotation must match rotation marking.

If pressure differential is not observed or blower* rotation is not correct:

3- Disconnect all remote electrical power supplies.

4- Reverse any two field-installed wires connected to the line side of S48 disconnect or TB13 terminal strip. Do not reverse wires at blower contactor.

5- Make sure the connections are tight.

Discharge and suction pressures should operate at their normal start-up ranges.

*Supply air VFD motors should rotate in the correct direction; verify scroll compressor rotation separately. Contact technical support if the VFD blower is rotating incorrectly.

⚠ WARNING

1- Make sure that unit is installed in accordance with the installation instructions and applicable codes.

2- Inspect all electrical wiring, both field and factory-installed, for loose connections. Tighten as required.

3- Check to ensure that refrigerant lines do not rub against the cabinet or against other refrigerant lines.

4- Check voltage at disconnect switch. Voltage must be within range listed on nameplate. If not, consult power company and have voltage condition corrected before starting unit.

5- Make sure filters are new and in place before start-up.

B-Blower Access

1 - Disconnect jack/plug connector to blower motor. Also disconnect jack/plug connector heating limit switches on gas units.

2 - Remove screws on either side of blower assembly sliding base. See FIGURE 20.

3 - Pull base toward outside of unit.

C-Determining Unit CFM

IMPORTANT - Multi-staged supply air units are factory-set to run the blower at full speed when there is a blower (G) demand without a heating or cooling demand. Refer to the field-provided, design specified CFM for all modes of operation. Use the following procedure to adjust motor pulley to deliver the highest CFM called for in the design spec. See Inverter Start-Up section to set blower CFM for all modes once the motor pulley is set.

1 - The following measurements must be made with a dry indoor coil. Run blower (G demand) without a cooling demand. Measure the indoor blower shaft RPM. Air filters must be in place when measurements are taken.

2 - With all access panels in place, measure static pressure external to unit (from supply to return). Blower performance data is based on static pressure readings taken in locations shown in FIGURE 19.

***NOTE -** Static pressure readings can vary if not taken where shown.*

3 - Referring to page 25, use static pressure and RPM readings to determine unit CFM. Use page 25 when installing units with any of the optional accessories listed.

4 - The blower RPM can be adjusted at the motor pulley. Loosen Allen screw and turn adjustable pulley clockwise to increase CFM. Turn counterclockwise to decrease CFM. See FIGURE 20. Do not exceed minimum and maximum number of pulley turns as shown in TABLE 4.

TABLE 4
MINIMUM AND MAXIMUM PULLEY ADJUSTMENT

Belt	Min. Turns Open	Max. Turns Open
A Section	No minimum	5
B Section	1*	6

*No minimum number of turns open when B belt is used on pulleys 6” O.D. or larger.

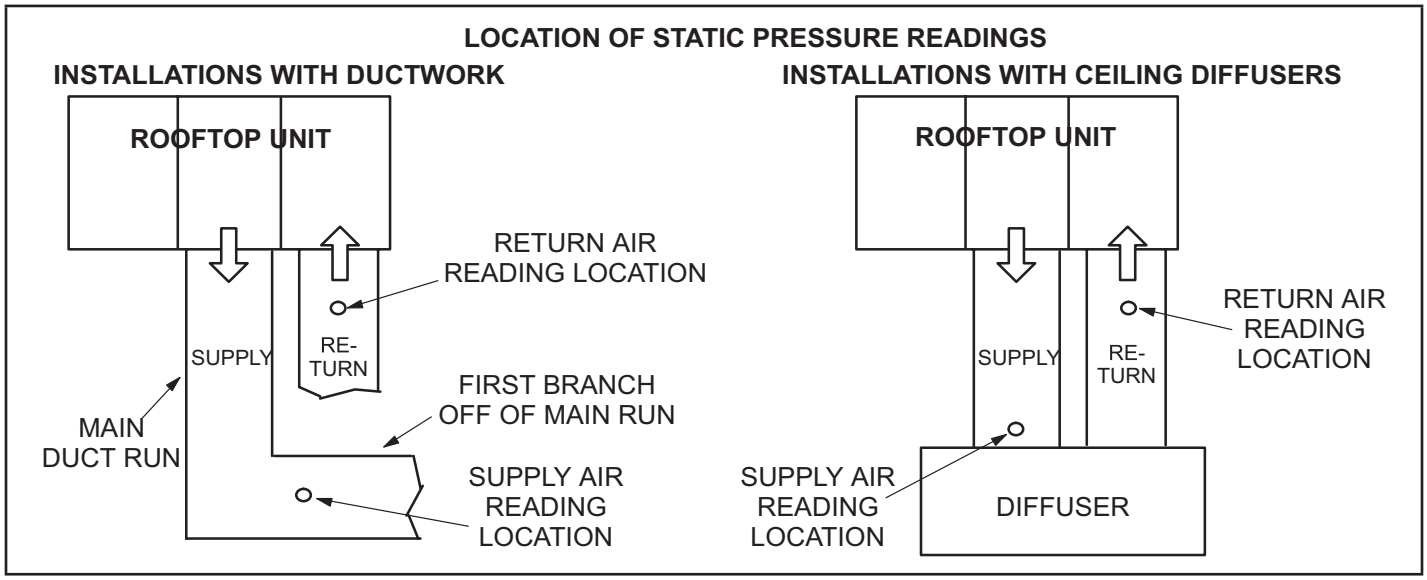

FIGURE 19

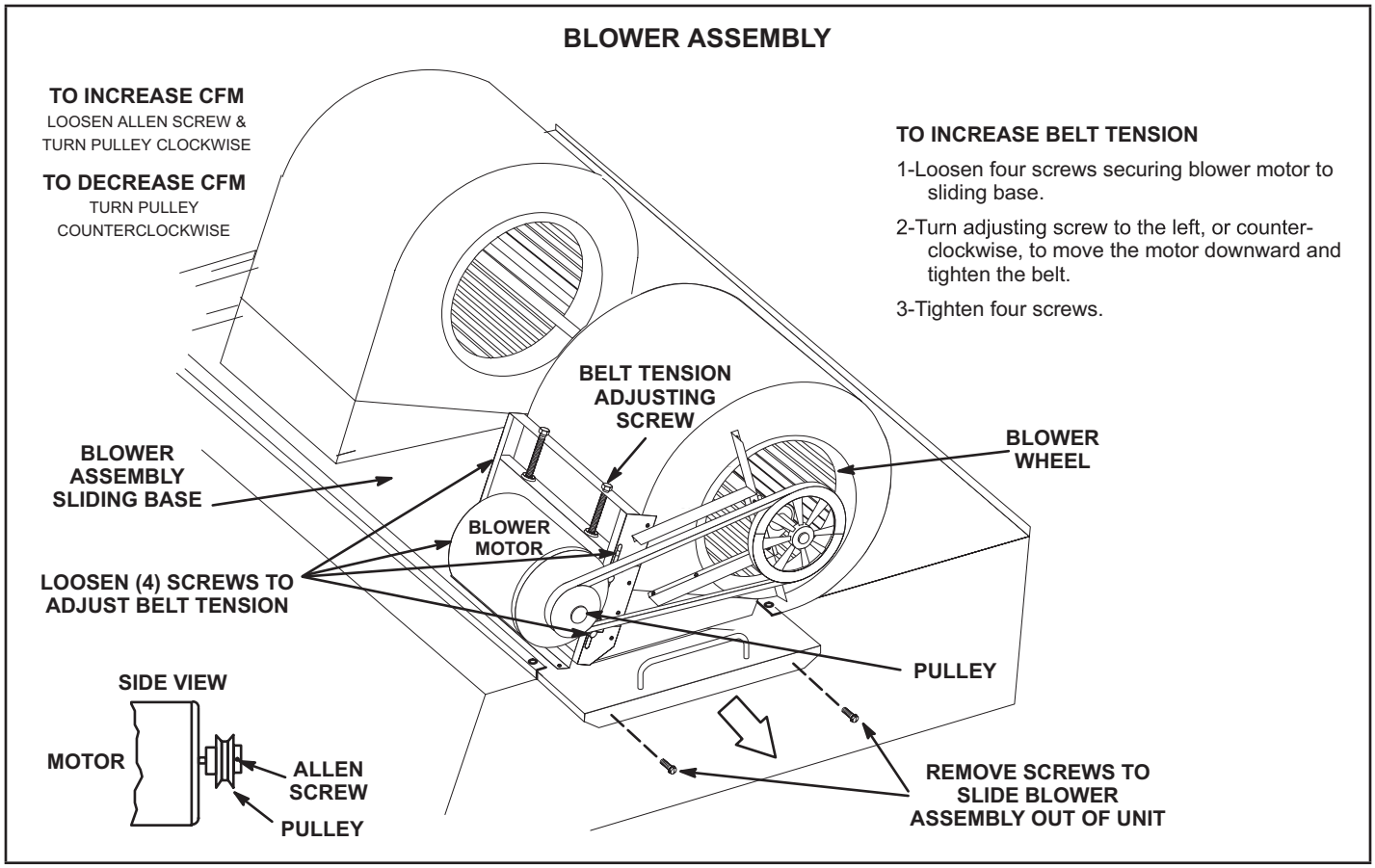

FIGURE 20

D-Blower Belt Adjustment

Maximum life and wear can be obtained from belts only if proper pulley alignment and belt tension are maintained. Tension new belts after a 24-48 hour period of operation. This will allow belt to stretch and seat into pulley grooves. Make sure blower and motor pulley are aligned. See FIGURE 21.

1 - Loosen four screws securing blower motor to sliding base. See FIGURE 20.

2 - To increase belt tension -

Turn belt tension adjusting screw to the left, or counterclockwise, to tighten the belt. This increases the distance between the blower motor and the blower housing.

To loosen belt tension -

Turn the adjusting screw to the right, or clockwise to loosen belt tension.

3 - Tighten four screws securing blower motor to sliding base once adjustments have been made.

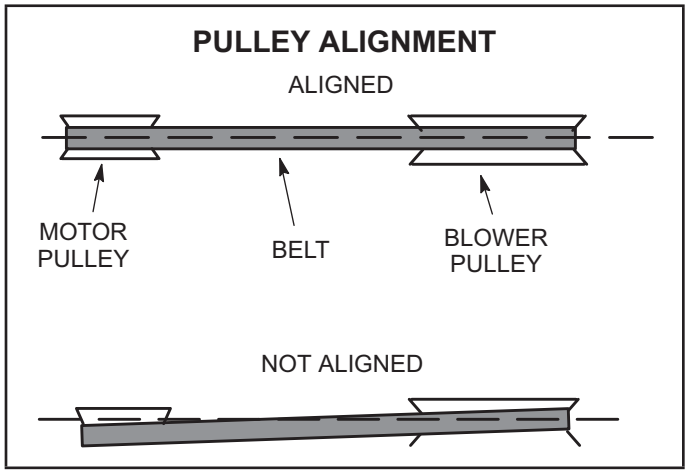

FIGURE 21

E-Check Belt Tension

Overtensioning belts shortens belt and bearing life. Check belt tension as follows:

1 - Measure span length X. See FIGURE 22.

2 - Apply perpendicular force to center of span (X) with enough pressure to deflect belt 1/64” for every inch of span length or 1.5mm per 100mm of span length.

Example: Deflection distance of a 40” span would be 40/64” or 5/8”.

Example: Deflection distance of a 400mm span would be 6mm.

3 - Measure belt deflection force. For a used belt, the deflection force should be 5 lbs. (35kPa) . A new belt deflection force should be 7 lbs. (48kPa).

A force below these values indicates and undertensioned belt. A force above these values indicates an overtensioned belt.

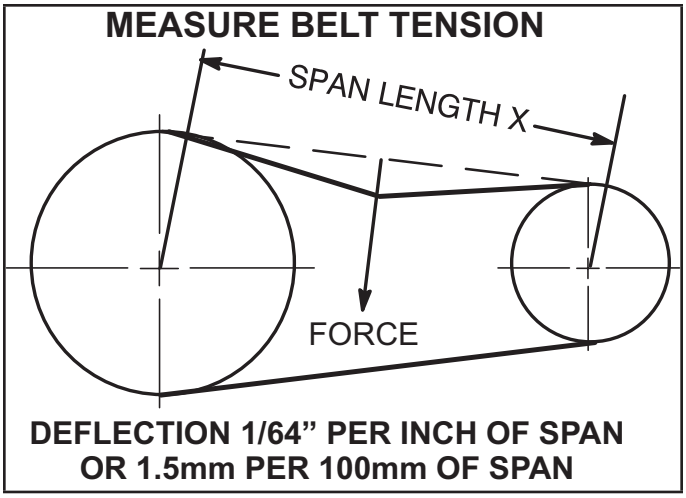

FIGURE 22

F-Field-Furnished Blower Drives

For field-furnished blower drives, use page 25 to determine BHP and RPM required. Reference page 26 to determine the manufacturer’s model number.

G-Minimum Airflow For Electric Heat (Field Installed Option)

Electric Heat kW	Minimum CFM
15	5200
30	5200
45	5200
60	5200
90	6000

BLOWER DATA (ENVIRON™ INDOOR COIL)

BLOWER TABLE INCLUDES RESISTANCE FOR BASE UNIT ONLY WITH DRY INDOOR COIL & AIR FILTERS IN PLACE

FOR ALL UNITS ADD:

1 - Wet indoor coil air resistance of selected unit.
2 - Any factory installed options air resistance (electric heat, economizer, etc.)
3 - Any field installed accessories air resistance (electric heat, duct resistance, diffuser, etc.)

Then determine from blower table blower motor output and drive required.
See page 67 for wet coil, option/accessory air resistance data, and factory installed drive kit specifications.
See page 12 for minimum air volume required for use with optional electric heat.

Air Volume cfm	TOTAL STATIC PRESSURE - Inches Water Gauge (Pa)																									
	0.20		0.40		0.60		0.80		1.00		1.20		1.40		1.60		1.80		2.00		2.20		2.40		2.60	
	RPM	BHP	RPM	BHP	RPM	BHP	RPM	BHP	RPM	BHP	RPM	BHP	RPM	BHP	RPM	BHP	RPM	BHP	RPM	BHP	RPM	BHP	RPM	BHP	RPM	BHP
2750	401	0.50	515	0.75	613	1.02	696	1.28	763	1.57	819	1.87	868	2.19	913	2.53	955	2.89	995	3.26	1034	3.65	1072	4.04	- - -	- - -
3000	412	0.56	526	0.82	624	1.11	706	1.37	772	1.66	827	1.96	875	2.29	919	2.64	961	3.02	1002	3.40	1042	3.80	1080	4.21	1118	4.61
3250	424	0.63	538	0.90	635	1.20	715	1.47	780	1.76	833	2.07	880	2.40	924	2.76	967	3.15	1009	3.55	1049	3.96	1088	4.38	1127	4.80
3500	437	0.70	550	0.98	646	1.30	724	1.57	787	1.86	838	2.18	884	2.52	929	2.89	973	3.29	1015	3.71	1056	4.13	1096	4.57	1135	5.00
3750	450	0.77	563	1.07	656	1.40	732	1.67	793	1.98	844	2.30	889	2.65	934	3.03	979	3.44	1022	3.87	1064	4.31	1104	4.76	1144	5.20
4000	464	0.86	576	1.17	667	1.51	740	1.79	800	2.10	850	2.44	896	2.80	941	3.19	986	3.61	1029	4.05	1072	4.50	1113	4.95	1153	5.41
4250	479	0.95	588	1.27	676	1.63	748	1.91	806	2.23	857	2.58	903	2.95	949	3.36	994	3.79	1037	4.23	1080	4.69	1122	5.15	1163	5.62
4500	494	1.04	601	1.38	686	1.75	755	2.03	813	2.37	864	2.73	911	3.12	957	3.53	1002	3.97	1046	4.42	1089	4.89	1131	5.36	1173	5.83
4750	509	1.15	613	1.50	695	1.88	762	2.17	820	2.52	871	2.89	919	3.29	966	3.72	1011	4.16	1056	4.62	1099	5.09	1142	5.57	1183	6.04
5000	524	1.25	625	1.63	703	2.01	769	2.31	827	2.68	878	3.06	927	3.47	975	3.91	1021	4.36	1066	4.83	1110	5.30	1153	5.78	1195	6.25
5250	538	1.37	636	1.76	712	2.16	776	2.46	834	2.84	886	3.24	936	3.66	984	4.11	1031	4.57	1077	5.04	1121	5.51	1164	5.99	1206	6.47
5500	552	1.48	647	1.90	720	2.30	783	2.62	841	3.02	894	3.43	945	3.86	994	4.32	1042	4.78	1088	5.26	1132	5.74	1176	6.22	1219	6.69
5750	566	1.61	658	2.05	729	2.46	791	2.79	850	3.20	903	3.63	955	4.07	1004	4.53	1052	5.00	1099	5.48	1144	5.96	1188	6.45	1231	6.93
6000	579	1.73	669	2.22	738	2.63	800	2.97	858	3.39	912	3.83	964	4.29	1014	4.76	1063	5.23	1110	5.71	1156	6.20	1200	6.68	1244	7.16
6250	593	1.87	680	2.39	747	2.80	808	3.15	867	3.60	922	4.05	974	4.51	1025	4.99	1074	5.47	1121	5.95	1167	6.44	1212	6.93	1256	7.41
6500	606	2.03	691	2.57	756	2.99	817	3.35	876	3.81	932	4.27	985	4.75	1036	5.23	1085	5.71	1133	6.20	1179	6.69	1225	7.18	1269	7.66
6750	618	2.19	702	2.77	766	3.18	827	3.56	886	4.03	942	4.51	995	4.99	1047	5.47	1096	5.96	1144	6.46	1191	6.95	1237	7.44	1282	7.92
7000	631	2.37	713	2.97	775	3.38	836	3.77	896	4.26	952	4.75	1006	5.24	1058	5.73	1108	6.22	1156	6.71	1204	7.21	1250	7.70	1295	8.19
7250	644	2.56	724	3.18	785	3.59	846	4.00	906	4.50	963	5.00	1017	5.49	1070	5.99	1120	6.48	1169	6.98	1216	7.47	1263	7.96	1309	8.45
7500	656	2.77	735	3.40	795	3.81	856	4.24	917	4.75	974	5.26	1029	5.76	1081	6.25	1132	6.75	1181	7.24	1229	7.73	1277	8.22	1323	8.70
7750	669	2.98	746	3.63	805	4.04	867	4.49	928	5.01	986	5.52	1041	6.02	1094	6.52	1145	7.01	1194	7.51	1243	8.00	1290	8.48	- - -	- - -
8000	681	3.21	756	3.86	816	4.28	878	4.75	940	5.28	998	5.80	1053	6.30	1106	6.80	1157	7.29	1207	7.78	1256	8.27	1304	8.75	- - -	- - -
8250	693	3.45	768	4.11	827	4.53	890	5.02	951	5.56	1010	6.08	1065	6.58	1119	7.07	1170	7.57	1220	8.05	1270	8.54	1318	9.02	- - -	- - -
8500	705	3.71	779	4.37	838	4.79	902	5.30	963	5.84	1022	6.36	1078	6.86	1131	7.36	1183	7.85	1234	8.33	1283	8.82	- - -	- - -	- - -	- - -
8750	718	3.97	790	4.63	850	5.07	914	5.59	976	6.13	1034	6.65	1090	7.15	1144	7.64	1196	8.13	1247	8.61	1297	9.09	- - -	- - -	- - -	- - -
9000	730	4.25	802	4.91	862	5.35	926	5.89	988	6.43	1047	6.94	1103	7.44	1157	7.93	1210	8.42	1261	8.90	1311	9.38	- - -	- - -	- - -	- - -
9250	743	4.54	813	5.19	874	5.64	939	6.19	1001	6.72	1059	7.23	1116	7.73	1170	8.22	1223	8.71	1274	9.18	1325	9.66	- - -	- - -	- - -	- - -
9500	756	4.84	825	5.48	886	5.94	951	6.49	1013	7.02	1072	7.53	1129	8.03	1183	8.52	1236	9.00	1288	9.47	- - -	- - -	- - -	- - -	- - -	- - -
9750	768	5.15	837	5.78	899	6.24	964	6.79	1026	7.32	1085	7.83	1142	8.33	1196	8.81	1250	9.29	1302	9.76	- - -	- - -	- - -	- - -	- - -	- - -
10,000	781	5.47	849	6.08	911	6.54	977	7.10	1039	7.63	1098	8.13	1155	8.63	1210	9.11	1263	9.58	1315	10.05	- - -	- - -	- - -	- - -	- - -	- - -
10,250	794	5.80	861	6.39	924	6.85	990	7.41	1051	7.93	1111	8.44	1168	8.93	1223	9.41	1277	9.88	1329	10.35	- - -	- - -	- - -	- - -	- - -	- - -
10,500	807	6.13	874	6.69	937	7.15	1003	7.73	1064	8.24	1124	8.74	1181	9.23	1236	9.71	1290	10.18	- - -	- - -	- - -	- - -	- - -	- - -	- - -	- - -
10,750	820	6.47	886	7.01	950	7.46	1016	8.04	1077	8.55	1137	9.05	1194	9.53	1249	10.01	1304	10.47	- - -	- - -	- - -	- - -	- - -	- - -	- - -	- - -
11,000	834	6.81	899	7.32	963	7.77	1029	8.36	1090	8.87	1150	9.36	1207	9.84	1263	10.31	1317	10.77	- - -	- - -	- - -	- - -	- - -	- - -	- - -	- - -

BLOWER DATA (FIN/TUBE INDOOR COIL)

BLOWER TABLE INCLUDES RESISTANCE FOR BASE UNIT ONLY WITH DRY INDOOR COIL & AIR FILTERS IN PLACE

FOR ALL UNITS ADD:

1 - Wet indoor coil air resistance of selected unit.
2 - Any factory installed options air resistance (electric heat, economizer, etc.)
3 - Any field installed accessories air resistance (electric heat, duct resistance, diffuser, etc.)

Then determine from blower table blower motor output and drive required.
See page 67 for wet coil, option/accessory air resistance data, and factory installed drive kit specifications.
See page 12 for minimum air volume required for use with optional electric heat.

Air Volume cfm	TOTAL STATIC PRESSURE - Inches Water Gauge (Pa)																									
	0.20		0.40		0.60		0.80		1.00		1.20		1.40		1.60		1.80		2.00		2.20		2.40		2.60	
	RPM	BHP	RPM	BHP	RPM	BHP	RPM	BHP	RPM	BHP	RPM	BHP	RPM	BHP	RPM	BHP	RPM	BHP	RPM	BHP	RPM	BHP	RPM	BHP	RPM	BHP
2750	385	0.30	505	0.50	600	0.70	680	0.90	755	1.10	820	1.30	- - -	- - -	- - -	- - -	- - -	- - -	- - -	- - -	- - -	- - -	- - -	- - -	- - -	- - -
3000	395	0.35	515	0.55	610	0.75	685	1.00	760	1.20	825	1.45	885	1.70	- - -	- - -	- - -	- - -	- - -	- - -	- - -	- - -	- - -	- - -	- - -	- - -
3250	405	0.40	520	0.60	615	0.85	695	1.10	765	1.30	830	1.60	890	1.85	950	2.10	- - -	- - -	- - -	- - -	- - -	- - -	- - -	- - -	- - -	- - -
3500	415	0.45	530	0.70	620	0.95	700	1.20	775	1.45	840	1.70	900	2.00	955	2.25	1005	2.55	- - -	- - -	- - -	- - -	- - -	- - -	- - -	- - -
3750	425	0.50	540	0.75	630	1.05	710	1.30	780	1.60	845	1.85	905	2.15	960	2.45	1010	2.70	1060	3.00	1110	3.30	- - -	- - -	- - -	- - -
4000	435	0.55	545	0.85	635	1.10	715	1.40	785	1.70	850	2.00	910	2.30	965	2.60	1020	2.90	1070	3.25	1115	3.55	1160	3.85	1205	4.15
4250	445	0.60	555	0.90	645	1.25	725	1.55	795	1.85	855	2.15	915	2.45	970	2.80	1025	3.10	1075	3.45	1120	3.75	1165	4.10	1210	4.45
4500	455	0.70	565	1.00	655	1.35	730	1.65	800	2.00	865	2.35	925	2.65	980	3.00	1030	3.30	1080	3.65	1130	4.05	1175	4.35	1215	4.70
4750	470	0.75	575	1.10	660	1.45	740	1.80	810	2.15	870	2.50	930	2.85	985	3.20	1040	3.55	1085	3.90	1135	4.25	1180	4.65	1225	5.00
5000	480	0.85	585	1.25	670	1.60	750	1.95	815	2.30	880	2.70	940	3.05	995	3.40	1045	3.80	1095	4.15	1140	4.50	1185	4.90	1230	5.30
5250	495	0.95	595	1.35	680	1.70	755	2.10	825	2.50	890	2.90	945	3.25	1000	3.65	1050	4.00	1100	4.40	1150	4.80	1195	5.20	1235	5.60
5500	505	1.05	605	1.45	690	1.85	765	2.25	835	2.65	895	3.05	955	3.45	1010	3.85	1060	4.25	1110	4.70	1155	5.10	1200	5.50	1240	5.90
5750	520	1.15	615	1.60	700	2.00	775	2.45	840	2.85	905	3.25	960	3.65	1015	4.10	1065	4.50	1115	4.95	1160	5.35	1205	5.80	1250	6.25
6000	530	1.30	630	1.75	710	2.15	785	2.60	850	3.05	910	3.45	970	3.90	1025	4.35	1075	4.80	1120	5.20	1170	5.65	1215	6.10	1255	6.55
6250	545	1.40	640	1.90	720	2.35	795	2.80	860	3.25	920	3.70	975	4.15	1030	4.60	1080	5.05	1130	5.50	1175	5.95	1220	6.45	1265	6.90
6500	560	1.55	650	2.05	730	2.50	805	3.00	870	3.45	930	3.95	985	4.40	1040	4.85	1090	5.35	1140	5.85	1185	6.30	1225	6.75	1270	7.25
6750	570	1.70	665	2.20	745	2.70	815	3.20	880	3.70	940	4.20	995	4.65	1045	5.10	1095	5.60	1145	6.10	1190	6.60	1235	7.10	1275	7.60
7000	585	1.85	675	2.35	755	2.90	825	3.40	890	3.95	950	4.45	1005	4.95	1055	5.40	1105	5.95	1155	6.45	1200	6.95	1240	7.45	1285	8.00
7250	600	2.00	690	2.60	765	3.10	835	3.65	900	4.15	955	4.65	1015	5.25	1065	5.75	1115	6.25	1160	6.75	1205	7.30	1250	7.85	1290	8.35
7500	615	2.20	700	2.75	775	3.30	845	3.85	910	4.45	965	4.95	1020	5.50	1075	6.05	1125	6.60	1170	7.15	1215	7.65	1260	8.25	1300	8.75
7750	630	2.40	715	3.00	790	3.55	855	4.10	920	4.70	975	5.25	1030	5.80	1080	6.35	1130	6.90	1180	7.50	1225	8.05	1265	8.60	1305	9.15
8000	640	2.55	725	3.20	800	3.80	865	4.35	930	4.95	985	5.50	1040	6.10	1090	6.70	1140	7.25	1185	7.85	1230	8.40	1275	9.00	1315	9.60
8250	655	2.80	740	3.40	810	4.00	880	4.65	940	5.25	995	5.85	1050	6.45	1100	7.05	1150	7.65	1195	8.25	1240	8.85	1280	9.40	1325	10.05
8500	670	3.00	750	3.65	825	4.30	890	4.90	950	5.55	1005	6.15	1060	6.80	1110	7.40	1160	8.05	1205	8.65	1250	9.25	1290	9.85	1330	10.45
8750	685	3.25	765	3.90	835	4.55	900	5.20	960	5.85	1015	6.45	1070	7.15	1120	7.75	1165	8.35	1215	9.05	1255	9.65	1300	10.30	- - -	- - -
9000	700	3.50	780	4.20	850	4.85	910	5.50	970	6.15	1025	6.80	1080	7.50	1130	8.15	1175	8.75	1220	9.40	1265	10.10	1310	10.80	- - -	- - -
9250	715	3.75	790	4.45	860	5.15	925	5.85	985	6.55	1040	7.20	1090	7.85	1140	8.55	1185	9.20	1230	9.85	1275	10.55	1315	11.20	- - -	- - -
9500	730	4.00	805	4.75	875	5.45	935	6.15	995	6.90	1050	7.60	1100	8.25	1150	8.95	1195	9.60	1240	10.30	1285	11.05	- - -	- - -	- - -	- - -
9750	745	4.30	820	5.05	885	5.75	950	6.55	1005	7.20	1060	7.95	1110	8.65	1160	9.40	1205	10.05	1250	10.80	1295	11.50	- - -	- - -	- - -	- - -
10,000	760	4.60	835	5.40	900	6.15	960	6.85	1015	7.60	1070	8.35	1120	9.05	1170	9.80	1215	10.50	1260	11.25	- - -	- - -	- - -	- - -	- - -	- - -
10,250	775	4.90	845	5.65	910	6.45	970	7.20	1030	8.00	1080	8.75	1135	9.55	1180	10.25	1225	11.00	- - -	- - -	- - -	- - -	- - -	- - -	- - -	- - -
10,500	790	5.20	860	6.00	925	6.85	985	7.65	1040	8.40	1095	9.20	1145	10.00	1190	10.70	1235	11.45	- - -	- - -	- - -	- - -	- - -	- - -	- - -	- - -
10,750	805	5.55	875	6.40	940	7.25	1000	8.05	1055	8.85	1105	9.65	1155	10.45	1200	11.20	- - -	- - -	- - -	- - -	- - -	- - -	- - -	- - -	- - -	- - -
11,000	820	5.90	890	6.80	950	7.60	1010	8.45	1065	9.30	1115	10.05	1165	10.90	- - -	- - -	- - -	- - -	- - -	- - -	- - -	- - -	- - -	- - -	- - -	- - -

BLOWER DATA

FACTORY INSTALLED BELT DRIVE KIT SPECIFICATIONS

Nominal hp	Maximum hp	Drive Kit Number	RPM Range
2	2.30	1	535 - 725
2	2.30	2	710 - 965
3	3.45	1	535 - 725
3	3.45	2	710 - 965
5	5.75	3	685 - 856
5	5.75	4	850 - 1045
5	5.75	5	945 - 1185
7.5	8.63	6	850 - 1045
7.5	8.63	7	945 - 1185
7.5	8.63	8	1045 - 1285
10	11.50	7	945 - 1185
10	11.50	10	1045 - 1285
10	11.50	11	1105-1330

NOTE - *Using total air volume and system static pressure requirements determine from blower performance tables rpm and motor output required. Maximum usable output of motors furnished are shown. In Canada, nominal motor output is also maximum usable motor output. If motors of comparable output are used, be sure to keep within the service factor limitations outlined on the motor nameplate.*

NOTE - *All units are limited to a motor service factor of 1.0.*

FACTORY INSTALLED OPTIONS/FIELD INSTALLED ACCESSORY AIR RESISTANCE - in w.g.

Air Volume cfm	Wet Indoor Coil				Reheat Coil Fin/ Tube	Gas Heat Exchanger			Econo-mizer	Filters			Horizontal Roof Curb	
	180, 210, 240 Environ™	300 Environ™	180 Fin/Tube	210, 240 300 Fin/Tube		Standard Heat	Medium Heat	High Heat		MERV 8	MERV 13	MERV 16	180 thru 240	300
2750	0.09	0.13	.01	.02	.01	.02	.04	.05	- - -	.01	.03	.06	.03	- - -
3000	0.09	0.19	.01	.02	.01	.03	.04	.05	- - -	.01	.03	.06	.04	- - -
3250	0.09	0.19	.01	.03	.01	.03	.05	.06	- - -	.01	.04	.07	.04	.01
3500	0.10	0.20	.01	.03	.02	.03	.05	.06	- - -	.01	.04	.08	.05	.01
3750	0.10	0.20	.01	.03	.02	.04	.06	.07	- - -	.01	.04	.08	.05	.01
4000	0.10	0.20	.02	.04	.02	.04	.06	.07	- - -	.01	.04	.09	.06	.02
4250	0.10	0.20	.02	.04	.02	.04	.06	.08	- - -	.01	.05	.10	.07	.02
4500	0.10	0.21	.02	.05	.02	.05	.07	.09	- - -	.01	.05	.10	.07	.02
4750	0.11	0.21	.02	.05	.02	.05	.08	.10	- - -	.02	.05	.11	.08	.03
5000	0.11	0.21	.02	.05	.02	.05	.09	.11	- - -	.02	.06	.12	.08	.03
5250	0.11	0.21	.02	.06	.03	.06	.10	.12	- - -	.02	.06	.12	.09	.04
5500	0.11	0.22	.02	.07	.03	.06	.10	.13	- - -	.02	.06	.13	.10	.04
5750	0.11	0.22	.03	.07	.03	.06	.11	.14	- - -	.02	.07	.14	.11	.05
6000	0.12	0.22	.03	.08	.03	.07	.12	.15	- - -	.03	.07	.14	.11	.06
6250	0.12	0.22	.03	.08	.03	.07	.12	.16	.01	.03	.07	.15	.12	.07
6500	0.12	0.23	.03	.09	.04	.08	.13	.17	.02	.03	.08	.16	.13	.08
6750	0.12	0.23	.04	.10	.04	.08	.14	.18	.03	.03	.08	.17	.14	.08
7000	0.12	0.23	.04	.10	.04	.09	.15	.19	.04	.04	.08	.17	.15	.09
7250	0.13	0.23	.04	.11	.04	.09	.16	.20	.05	.04	.09	.18	.16	.10
7500	0.13	0.24	.05	.12	.05	.10	.17	.21	.06	.04	.09	.19	.17	.11
8000	0.13	0.24	.05	.13	.05	.11	.19	.24	.09	.05	.10	.21	.19	.13
8500	0.14	0.25	.06	.15	.05	.12	.20	.26	.11	.05	.10	.22	.21	.15
9000	0.14	0.25	.07	.16	.06	.13	.23	.29	.14	.06	.11	.24	.24	.17
9500	0.15	0.26	.08	.18	.07	.14	.25	.32	.16	.07	.12	.25	.26	.19
10,000	0.15	0.26	.08	.20	.07	.16	.27	.35	.19	.07	.12	.27	.29	.21
10,500	0.15	0.27	.09	.22	.08	.17	.30	.38	.22	.08	.13	.29	.31	.24
11,000	0.16	0.27	.11	.24	.08	.18	.31	.40	.25	.09	.14	.30	.34	.27

TABLE 5
MANUFACTURER'S NUMBERS

Drive No.	H.P.	DRIVE COMPONENTS											
		RPM		ADJUSTABLE SHEAVE		FIXED SHEAVE		BELTS (STD.)		BELTS (WITH TENSIONER)		SPLIT BUSHING	
		Min	Max	Supplier No.	OEM Part No.	Supplier No.	OEM Part No.	Supplier No.	OEM Part No.	Supplier No.	OEM Part No.	Supplier No.	OEM Part No.
1	2, 3	535	725	1VP40x7/8	79J0301	BK95 x 1-3/16	105617-02	BX59	59A5001	BX60	100245-10	N/A	N/A
2	2, 3	710	965	1VP40x7/8	79J0301	BK72 x 1-3/16	105617-01	BX55	63K0501	BX57	78L5301	N/A	N/A
3	5	685	865	1VP50x1-1/8	P-8-1977	BK100 x 1-3/16	105617-03	BX61	93J9801	5VX660	100245-20	N/A	N/A
4	5	850	1045	1VP65x1-1/8	100239-03	BK110H	100788-06	BX65	100245-08	BX66	97J5901	H-1-3/16	105616-02
5	5	945	1185	1VP60x1-1/8	41C1301	BK90H x 1-7/16	100788-04	BX61	93J9801	BX62	57A7701	H-1-3/16	105616-02
6	7.5	850	1045	1VP65x1-3/8	78M7101	BK110H	100788-06	BX66	97J5901	BX67	100245-09	H-1-3/16	105616-02
7	7.5 & 10	945	1185	1VP60x1-3/8	78L5501	BK90H x 1-7/16	100788-04	BX62	57A7701	BX64	97J5801	H-1-3/16	105616-02
8	7.5	1045	1285	1VP65x1-3/8	78M7101	BK90H x 1-7/16	100788-04	BX64	97J5801	5VX670	100245-21	H-1-3/16	105616-02
10	10	1045	1285	1VP65x1-3/8	78M7101	1B5V86	78M8301	5VX660	100245-20	5VX670	100245-21	B-1-3/16	105616-01
11	10	1135	1330	1VP71X1-3/8	100239-06	1B5V90	100240-02	5VX680	100245-35	5VX680	100245-35	B-1-3/16	105616-01

Refrigerant Leak Detection System

A-System Test

1 - Initiate Refrigerant Leak Detection System Test by using the following mobile service app menu path:

RTU MENU > COMPONENT TEST > LEAK DETECTION > START TEST

2 - Ensure that indoor blower, outdoor fan, and combustion air blower (LGX only) are energized.

Cooling Start-Up

IMPORTANT - The crankcase heater must be energized for 24 hours before attempting to start compressor. Set thermostat so there is no demand to prevent compressors from cycling. Apply power to unit.

NOTE - *These units must not be used as a "construction heater" at any time during any phase of construction. Very low return air temperatures, harmful vapors and misplacement of the filters will damage the unit and its efficiency. Additionally, a unit which will be subject to cold temperatures when not in operation must have a vapor barrier installed to seal the duct connections. Failure to protect the unit from moisture laden air or harmful vapors (generated from the construction process and temporary combustion heating equipment) will cause corrosive condensation within the unit. Failure to properly protect the unit in this situation will cause electrical and electronic component failure and could affect the unit warranty status.*

A-Preliminary Checks

1 - Make sure that unit is installed in accordance with the installation instructions and applicable codes.

2 - Inspect all electrical wiring, both field and factory-installed, for loose connections. Tighten as required.

3 - Check to ensure that refrigerant lines do not rub against the cabinet or against other refrigerant lines.

4 - Check voltage at disconnect switch. Voltage must be within range listed on nameplate. If not, consult power company and have voltage condition corrected before starting unit.

5 - Make sure filters are in place before start-up.

B-Start-Up

1 - Initiate first and second stage cooling demands using this mobile service app menu path:

SERVICE > TEST > COOLING > COOL2

Instructions provided with the thermostat may also be used to initiate cooling.

2 - First-stage thermostat demand will energize indoor blower in Low Cooling CFM and associated first-stage compressors. Second-stage thermostat demand will energize indoor blower in High Cooling CFM and all remaining compressors.

3 - **Compressor Operation**

180S, 210S, 240S, Units -

First-stage thermostat demand will energize compressors 1 & 2, second-stage thermostat demand will energize compressor 3.

300S Unit -

First-stage thermostat demand will energize compressors 1 & 2, second-stage thermostat demand will energize compressors 3 & 4.

On units with an economizer, when outdoor air is acceptable, first-stage demand will energize the economizer, second-stage demand will energize compressors 1 and 2.

4 - **Refrigerant Circuits**

180S, 210S, 240S Units-

Units contain three refrigerant circuits or systems. Evaporator and condenser coil refrigerant circuits 1 and 2 make up stage 1 cooling. Evaporator and condenser refrigerant circuit 3 makes up stage 2 cooling. See FIGURE 23 for 180S, and 210S units. See FIGURE 24 for 240S units.

300S Units -

Units contain four refrigerant circuits or systems. Evaporator and condenser coil refrigerant circuits 1 and 2 make up stage 1 cooling. Evaporator and condenser refrigerant circuits 3 and 4 make up stage 2 cooling. See FIGURE 25.

5 - Each refrigerant circuit is separately charged with R454B refrigerant. See unit rating plate for correct amount of charge.

6 - Refer to the Refrigerant Charge and Check section to check refrigerant charge.

C-R454B Refrigerant

Units charged with R454B refrigerant operate at lower pressures than R410A. The expansion valve and liquid line dryer provided with the unit are approved for use with R454B.

R454B refrigerant is stored in a gray cylinder.

⚠ CAUTION

Mineral oils are not compatible with R454B. If oil must be added, it must be a polyolester oil.

Manifold gauge sets used with systems charged with R454B refrigerant must be capable of handling various system operating pressures. The gauges should be rated for use with pressures of 0-800 on the high side and a low side of 30" vacuum to 250 psi with dampened speed to 500 psi. Gauge hoses must be rated for use at up to 800 psi of pressure with a 4000 psi burst rating.

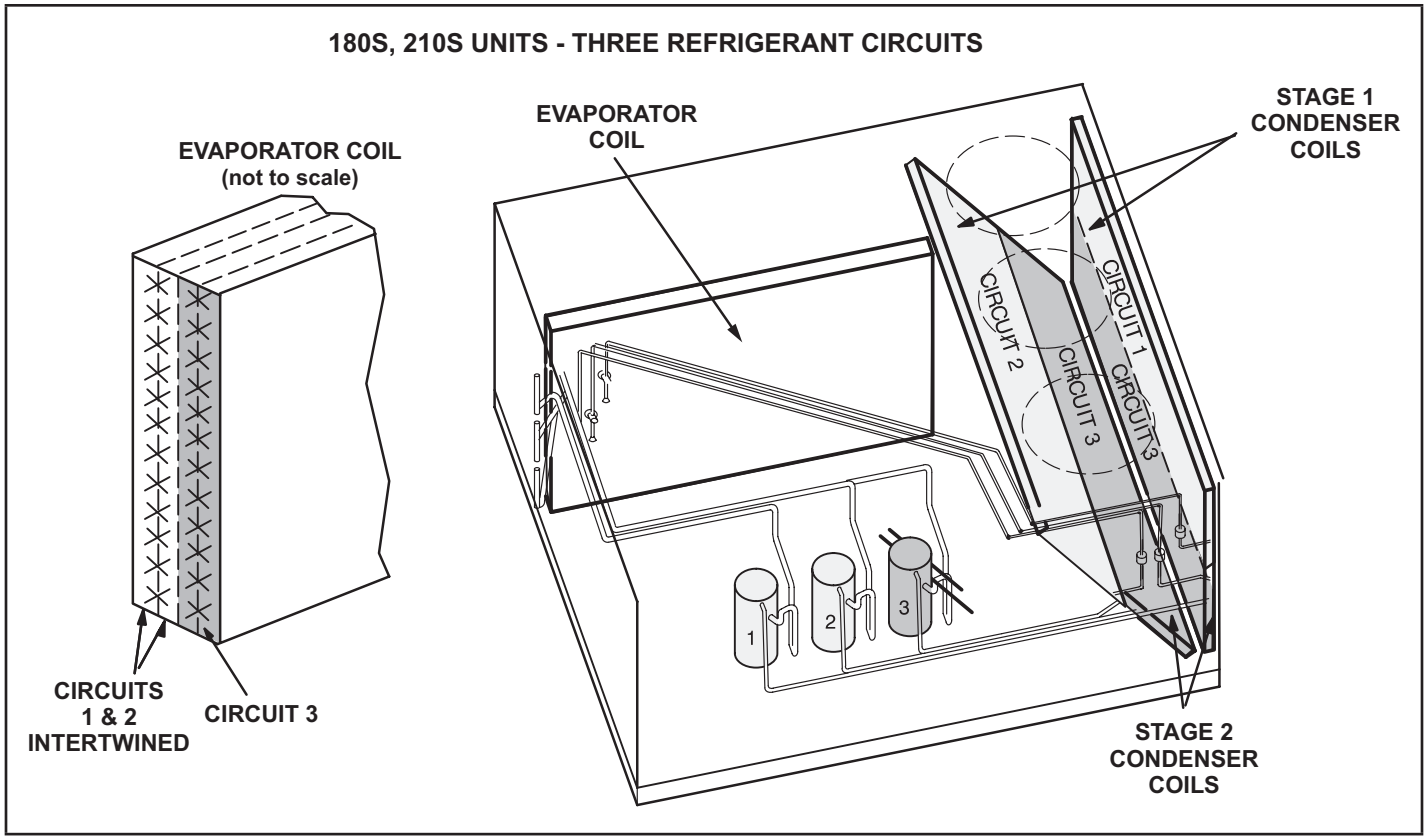

FIGURE 23

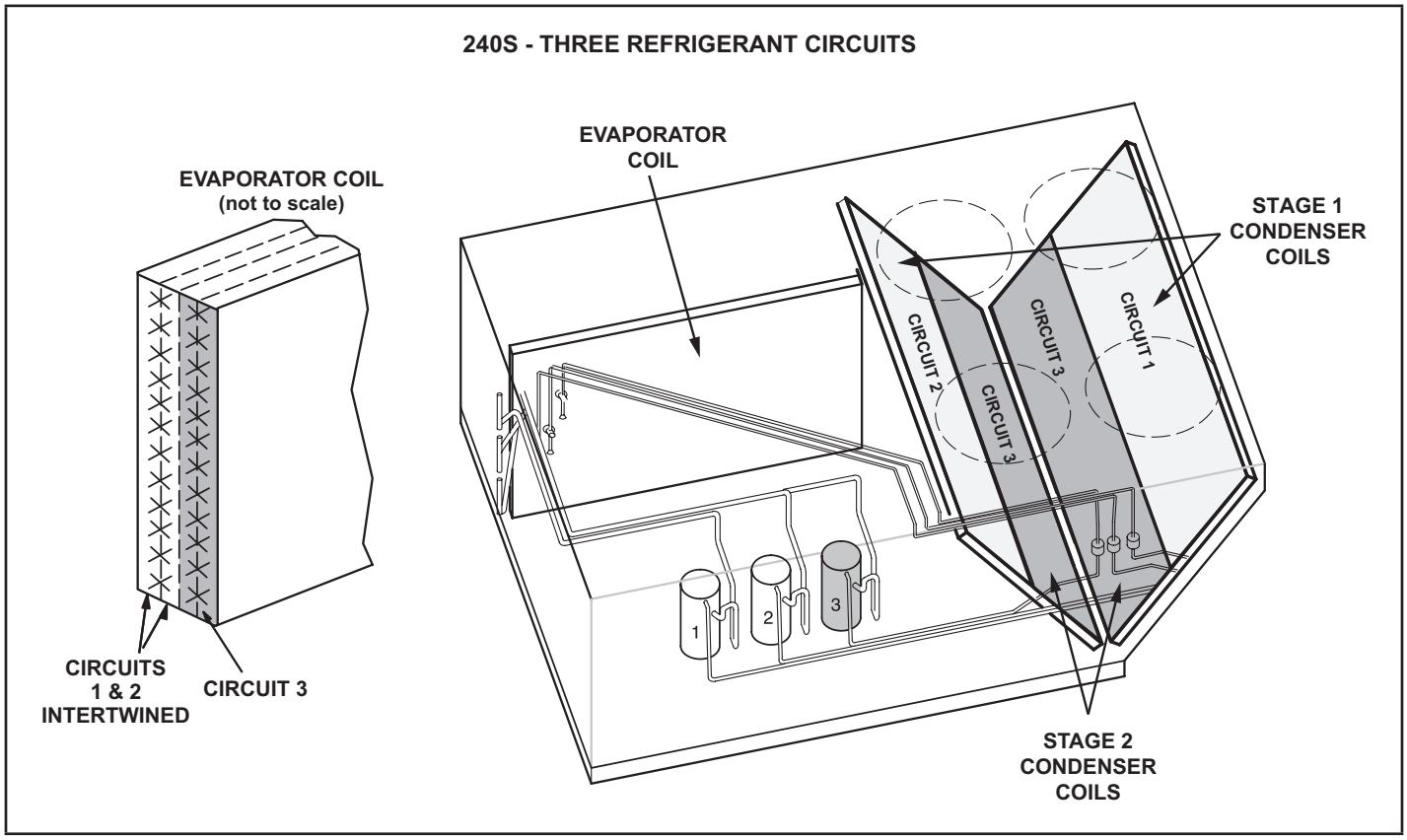

FIGURE 24

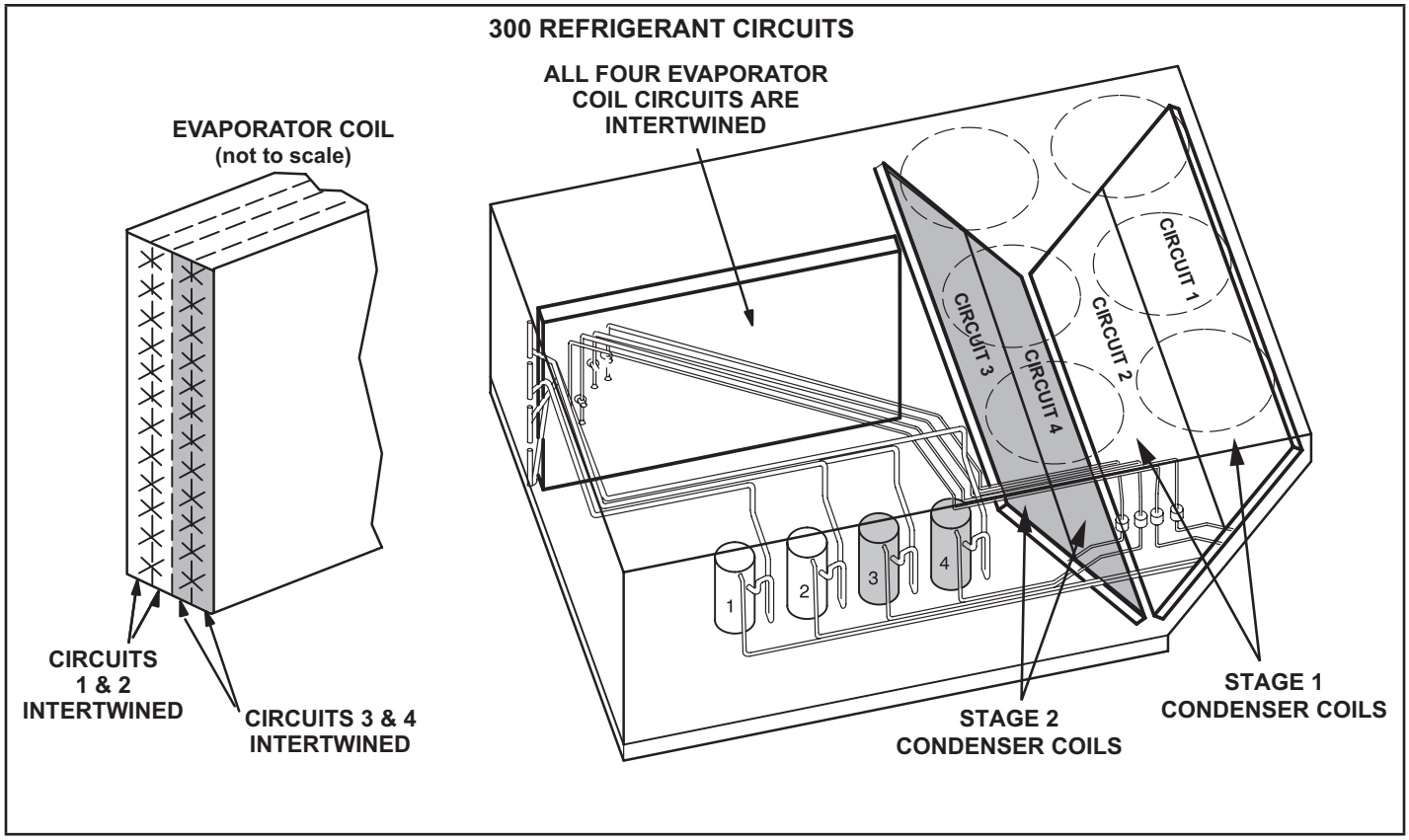
300 REFRIGERANT CIRCUITS
EVAPORATOR COIL
(not to scale)
ALL FOUR EVAPORATOR
COIL CIRCUITS ARE
INTERTWINED
CIRCUITS
1 & 2
INTERTWINED
CIRCUITS 3 & 4
INTERTWINED
CIRCUIT 1
CIRCUIT 2
CIRCUIT 3
CIRCUIT 4
1
2
3
4
STAGE 2
CONDENSER COILS
STAGE 1
CONDENSER COILS

FIGURE 25

D-Refrigerant Charge and Check - All Aluminum Coil

WARNING-Do not exceed nameplate charge under any condition.

This unit is factory charged and should require no further adjustment. If the system requires additional refrigerant, reclaim the charge, evacuate the system, and add required nameplate charge.

NOTE - *System charging is not recommended below 60°F (15°C). In temperatures below 60°F (15°C), the charge must be weighed into the system.*

If weighing facilities are not available, or to check the charge, use the following procedure:

IMPORTANT - Charge unit in normal cooling mode.

1 - Attach gauge manifolds to discharge and suction lines. With the economizer disabled, operate the unit in **cooling mode at high speed** using the following mobile service app menu path:

SERVICE > TEST > COOL > COOL2

2 - Use a thermometer to accurately measure the outdoor ambient temperature.

3 - Apply the outdoor temperature to TABLE 6 through TABLE 13 to determine normal operating pressures. Pressures are listed for sea level applications at 80°F dry bulb and 67°F wet bulb return air.

4 - Compare the normal operating pressures to the pressures obtained from the gauges. Minor variations in the pressures may be expected due to differences in installations. Significant differences could mean that the system is not properly charged or that a problem exists with some component in the system. **Correct any system problems before proceeding.**

5 - If discharge pressure is high, remove refrigerant from the system. If discharge pressure is low, add refrigerant to the system.

- Add or remove charge in increments.
- Allow the system to stabilize each time refrigerant is added or removed.

6 - Confirm charge amount using liquid temperature plots. Fine tune charge amount(s) to match liquid temperature plots as needed per the next section.

E-Charge Confirmation and Fine Tuning - Liquid Temperature Check

NOTE - *Pressures are listed for sea level applications.*

1 - Use the same thermometer to accurately measure the liquid temperature (in the outdoor section).

- If measured liquid temperature is higher than the target liquid temperature, add refrigerant to the system.
- If measured liquid temperature is lower than the target liquid temperature, recover some refrigerant from the system. Add or remove charge in increments. Allow the system to stabilize each time refrigerant is added or removed.

2 - Add or remove charge in increments. Allow the system to stabilize each time refrigerant is added or removed.

3 - Continue the process until measured liquid temperature agrees with the target liquid temperature. Do not go below the target liquid temperature when adjusting charge. Note that suction pressure can change as charge is adjusted.

4 - Example: At 95°F outdoor ambient and a measured suction pressure of 130psig, the target liquid temperature is 100°F. For a measured liquid temperature of 106°F, add charge in increments until measured liquid temperature agrees with the target liquid temperature.

In addition to conventional charging procedures, the following requirements shall be followed.

- Ensure that contamination of different refrigerants does not occur when using charging equipment. Hoses or lines shall be as short as possible to minimize the amount of refrigerant contained in them.
- Cylinders shall be kept in an appropriate position according to the instructions.
- Ensure that the unit is earth grounded prior to charging the system with refrigerant.
- Label the system when charging is complete (if not already).
- Extreme care shall be taken not to overfill the unit.

Prior to recharging the system, it shall be pressure-tested with the appropriate purging gas. The system shall be leak-tested on completion of charging but prior to commissioning. A follow up leak test shall be carried out prior to leaving the site.

- When removing refrigerant from a system, either for servicing or decommissioning, it is recommended good practice that all refrigerants are removed safely.
- When transferring refrigerant into cylinders, ensure that only appropriate refrigerant recovery cylinders are employed. Ensure that the correct number of cylinders for holding the total system charge is available. All cylinders to be used are designated for the recovered refrigerant and labelled for that refrigerant (i. e. special cylinders for the recovery of refrigerant). Cylinders shall be complete with pressure-relief valve and associated shut-of f valves in good working order. Empty recovery cylinders are evacuated and, if possible, cooled before recovery
- The recovery equipment shall be in good working order with a set of instructions concerning the

equipment that is at hand and shall be suitable for the recovery of all appropriate refrigerants including, when applicable, flammable refrigerants. In addition, a set of calibrated weighing scales shall be available and in good working order. Hoses shall be complete with leak-free disconnect couplings and in good condition. Before using the recovery machine, check that it is in satisfactory working order, has been properly maintained and that any associated electrical components are sealed to prevent ignition in the event of a refrigerant release. Consult manufacturer if in doubt.

- The recovered refrigerant shall be returned to the refrigerant supplier in the correct recovery cylinder, and the relevant waste transfer note arranged. Do not mix refrigerants in recovery units and especially
- If compressors or compressor oils are to be removed, ensure that they have been evacuated to an acceptable level to make certain that flammable refrigerant does not remain within the lubricant. The evacuation process shall be carried out prior to returning the compressor to the suppliers. Only electric heating to the compressor body shall be employed to accelerate this process. When oil is drained from a system, it shall be carried out safely.

NOTE - *System charging is not recommended below 60°F (15°C). In temperatures below 60°F (15°C), the charge must be weighed into the system.*

If weighing facilities are not available, or to check the charge, use the following procedure:

1 - Make sure outdoor coil is clean. Attach gauge manifolds and operate unit at full CFM in cooling mode with economizer disabled until system stabilizes (approximately five minutes). Make sure all outdoor air dampers are closed.

2 - Compare the normal operating pressures to the pressures obtained from the gauges. Check unit components if there are significant differences.

3 - Measure the outdoor ambient temperature and the suction pressure. Refer to the charging curve to determine a target liquid temperature.

NOTE - *Pressures are listed for sea level applications.*

4 - Use the same thermometer to accurately measure the liquid temperature (in the outdoor section).

- If measured liquid temperature is higher than the target liquid temperature, add refrigerant to the system.
- If measured liquid temperature is lower than the target liquid temperature, recover some refrigerant from the system..

5 - Add or remove charge in increments. Allow the system to stabilize each time refrigerant is added or removed.

6 - Continue the process until measured liquid temperature agrees with the target liquid temperature. Do not go below the target liquid temperature when adjusting charge. Note that suction pressure can change as charge is adjusted.

7 - Example: At 95°F outdoor ambient and a measured suction pressure of 130psig, the target liquid temperature is 96°F. For a measured liquid temperature of 106°F, add charge in increments until measured liquid temperature agrees with the target liquid temperature.

TABLE 6

LGX/LCX 180 NO REHEAT NORMAL OPERATING PRESSURES - ALL-ALUMINUM ID & OD COIL - 581450-01

	Outdoor Coil Entering Air Temperature											
	65°F		75°F		85°F		95°F		105°F		115°F	
	Suct (psig)	Disc (psig)	Suct (psig)	Disc (psig)	Suct (psig)	Disc (psig)	Suct (psig)	Disc (psig)	Suct (psig)	Disc (psig)	Suct (psig)	Disc (psig)
Circuit 1	112	222	115	256	117	296	118	342	118	394	118	452
	119	223	122	258	125	298	127	345	128	397	128	456
	132	228	137	263	141	305	145	352	147	405	149	465
	144	234	151	270	157	313	162	361	167	416	171	476
Circuit 2	113	233	115	267	117	306	118	351	120	401	121	457
	121	236	123	269	125	309	127	354	129	404	131	461
	136	243	139	277	142	317	145	362	148	413	151	469
	153	253	157	287	161	327	165	372	168	423	172	480
Circuit 3	103	239	105	274	107	315	109	360	111	412	112	468
	111	242	113	278	115	319	117	365	119	416	122	473
	128	251	131	287	133	328	136	375	138	427	141	485
	147	261	150	298	153	340	156	388	159	441	162	499

LGX/LCX 180 NO REHEAT CHARGING CURVE CIRCUIT 1 - ALL-ALUMINUM ID & OD COIL - 581447-01

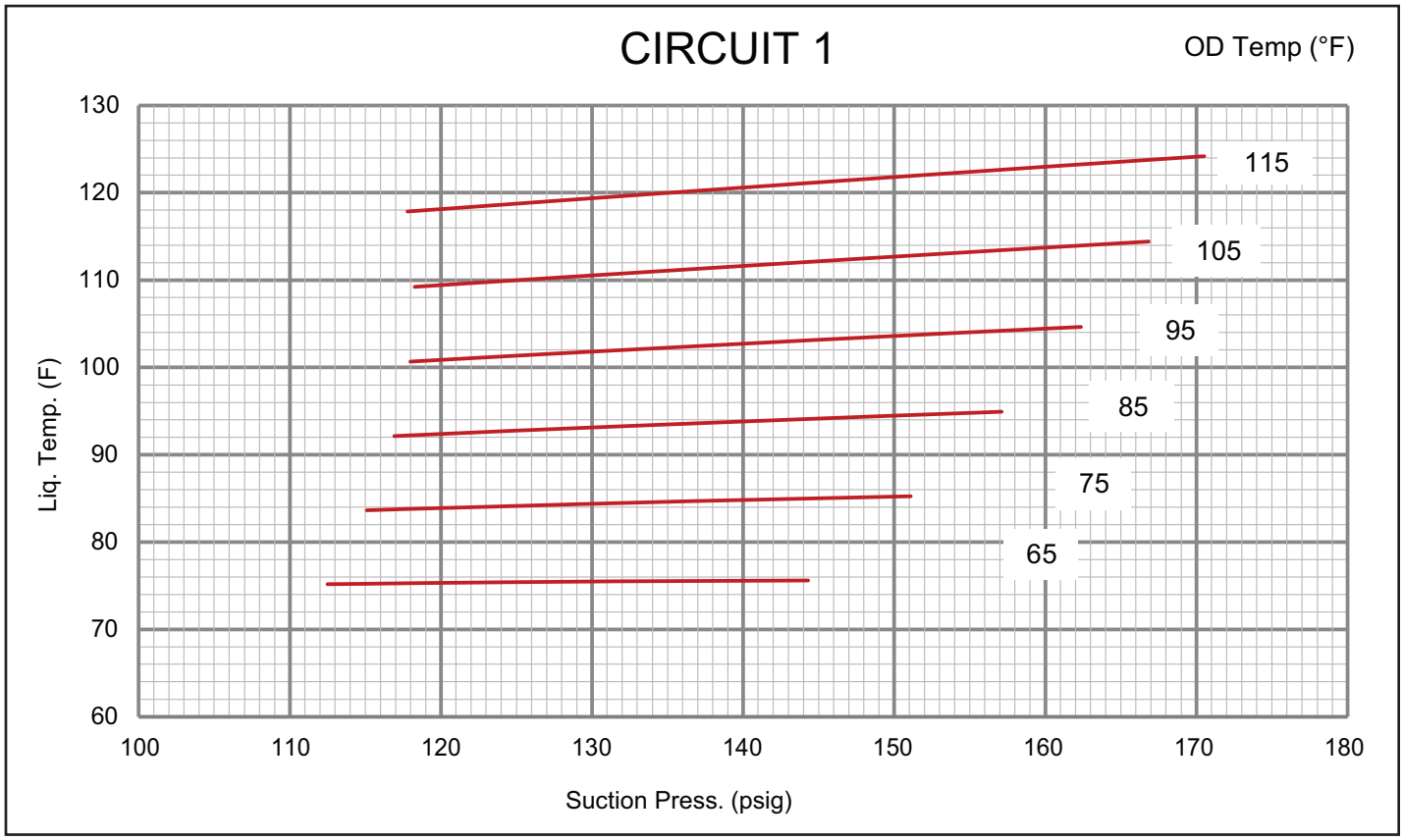

LGX/LCX 180 NO REHEAT CHARGING CURVE CIRCUIT 2 - ALL-ALUMINUM ID & OD COIL - 581447-01

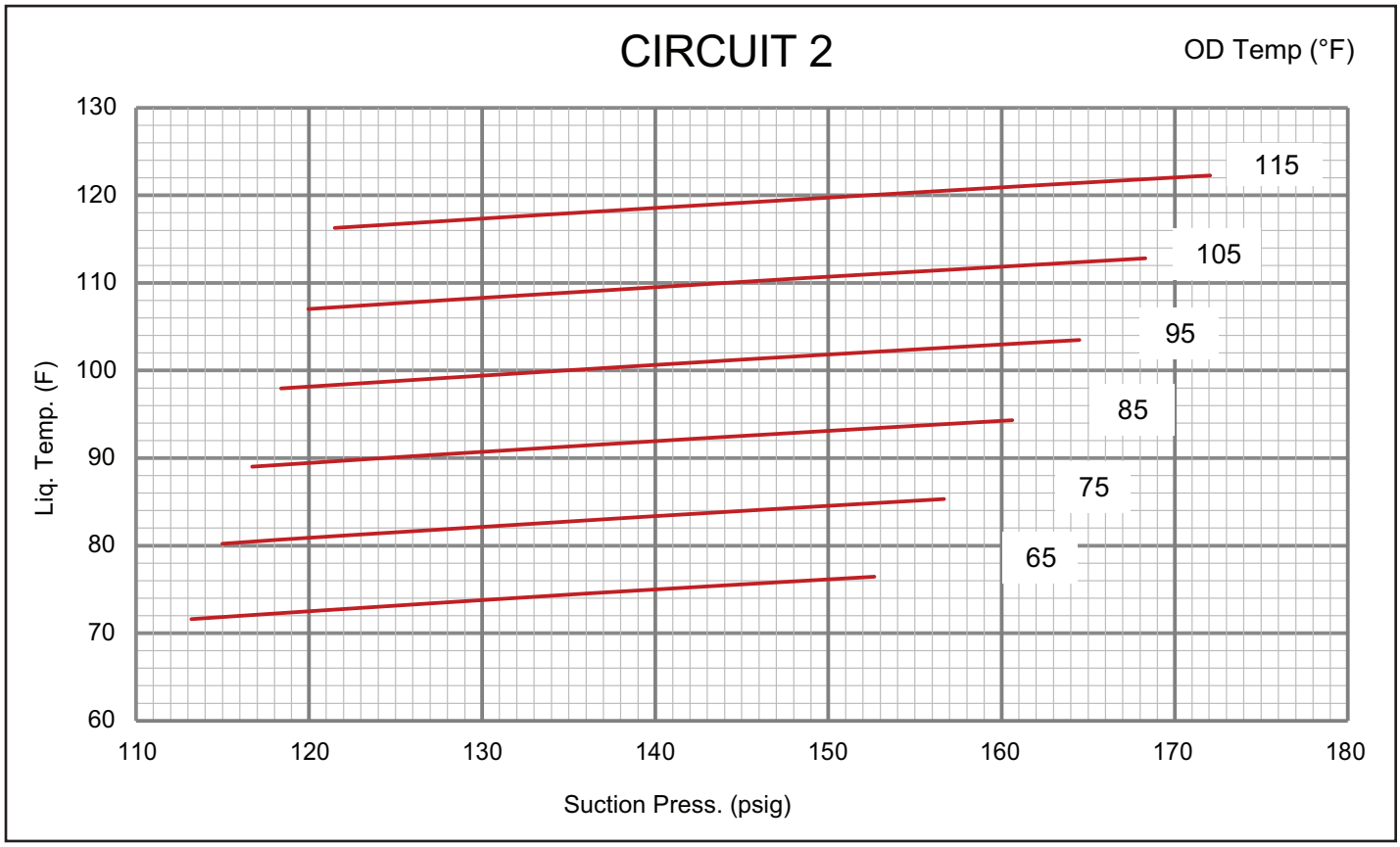

LGX/LCX 180 NO REHEAT CHARGING CURVE CIRCUIT 3 - ALL-ALUMINUM ID & OD COIL - 581447-01

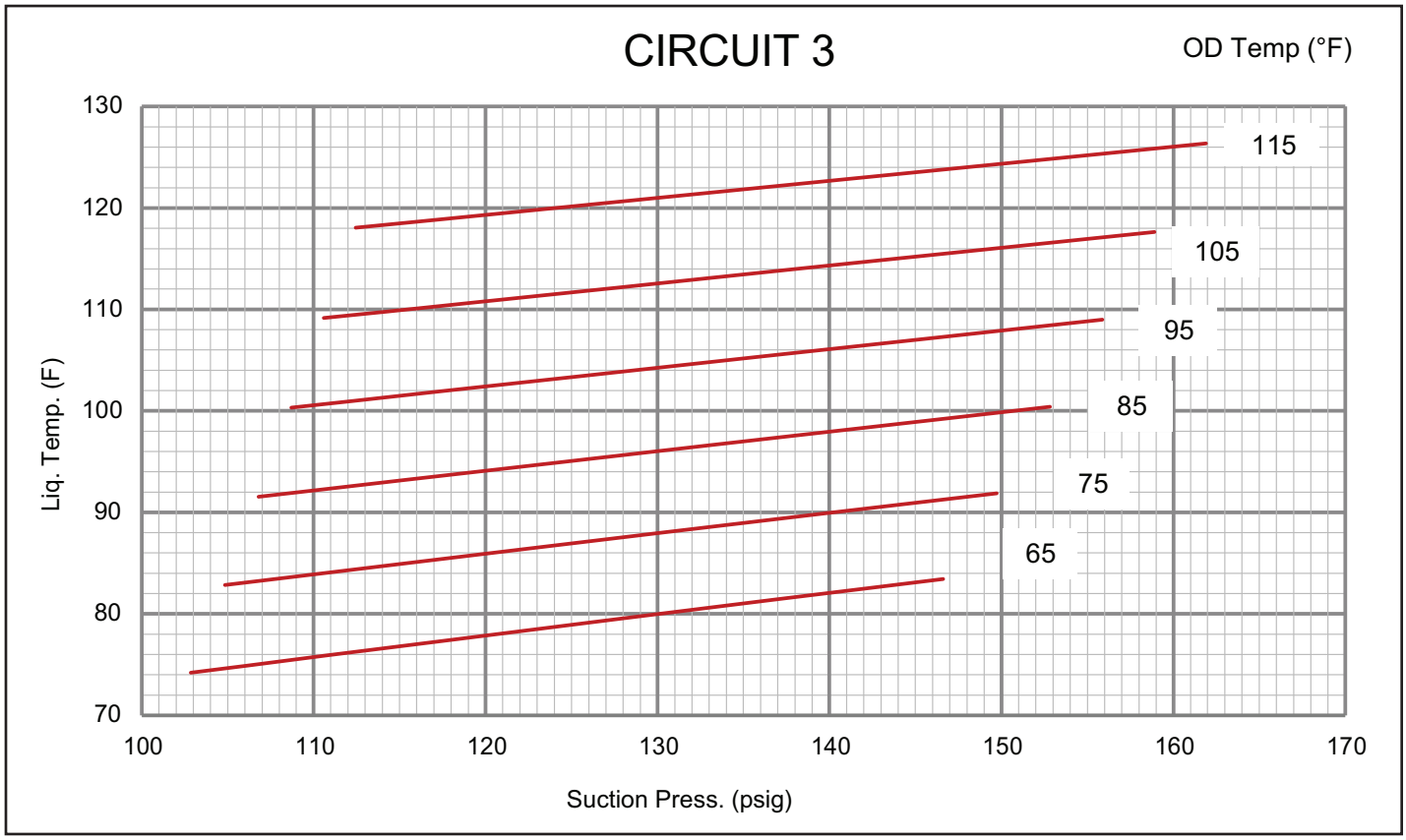

TABLE 7

LGX/LCX 210 NO REHEAT NORMAL OPERATING PRESSURES - ALL-ALUMINUM ID & OD COIL - 581451-01

	Outdoor Coil Entering Air Temperature											
	65°F		75°F		85°F		95°F		105°F		115°F	
	Suct (psig)	Disc (psig)	Suct (psig)	Disc (psig)	Suct (psig)	Disc (psig)	Suct (psig)	Disc (psig)	Suct (psig)	Disc (psig)	Suct (psig)	Disc (psig)
Circuit 1	105	230	108	268	110	310	111	356	111	406	110	459
	110	234	114	273	117	315	119	361	120	411	120	465
	122	243	127	282	132	325	136	371	138	422	140	476
	134	252	141	291	148	334	153	381	158	432	162	487
Circuit 2	110	232	113	269	114	310	114	356	113	406	112	461
	113	237	117	273	119	313	121	358	121	408	120	462
	124	253	130	287	134	326	137	369	139	417	141	470
	140	277	148	309	154	346	159	388	163	434	166	486
Circuit 3	90	239	92	277	94	319	96	366	99	417	101	473
	97	245	100	283	102	325	104	372	107	423	109	479
	113	257	116	295	119	337	122	384	124	436	127	492
	131	270	134	308	137	350	141	398	144	449	147	506

LGX/LCX 210 NO REHEAT CHARGING CURVE CIRCUIT 1 - ALL-ALUMINUM ID & OD COIL - 581448-01

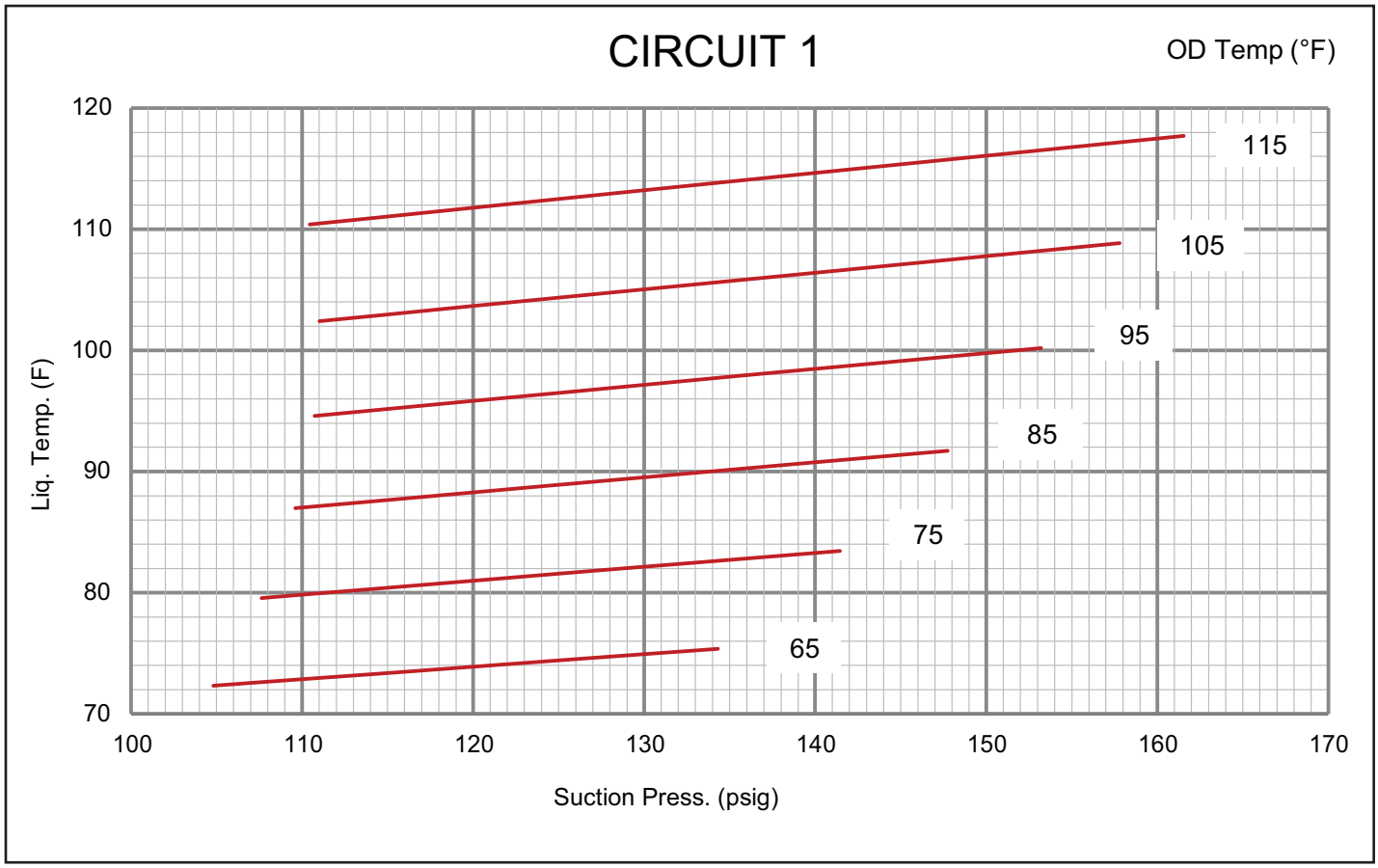

LGX/LCX 210 NO REHEAT CHARGING CURVE CIRCUIT 2 - ALL-ALUMINUM ID & OD COIL - 581448-01

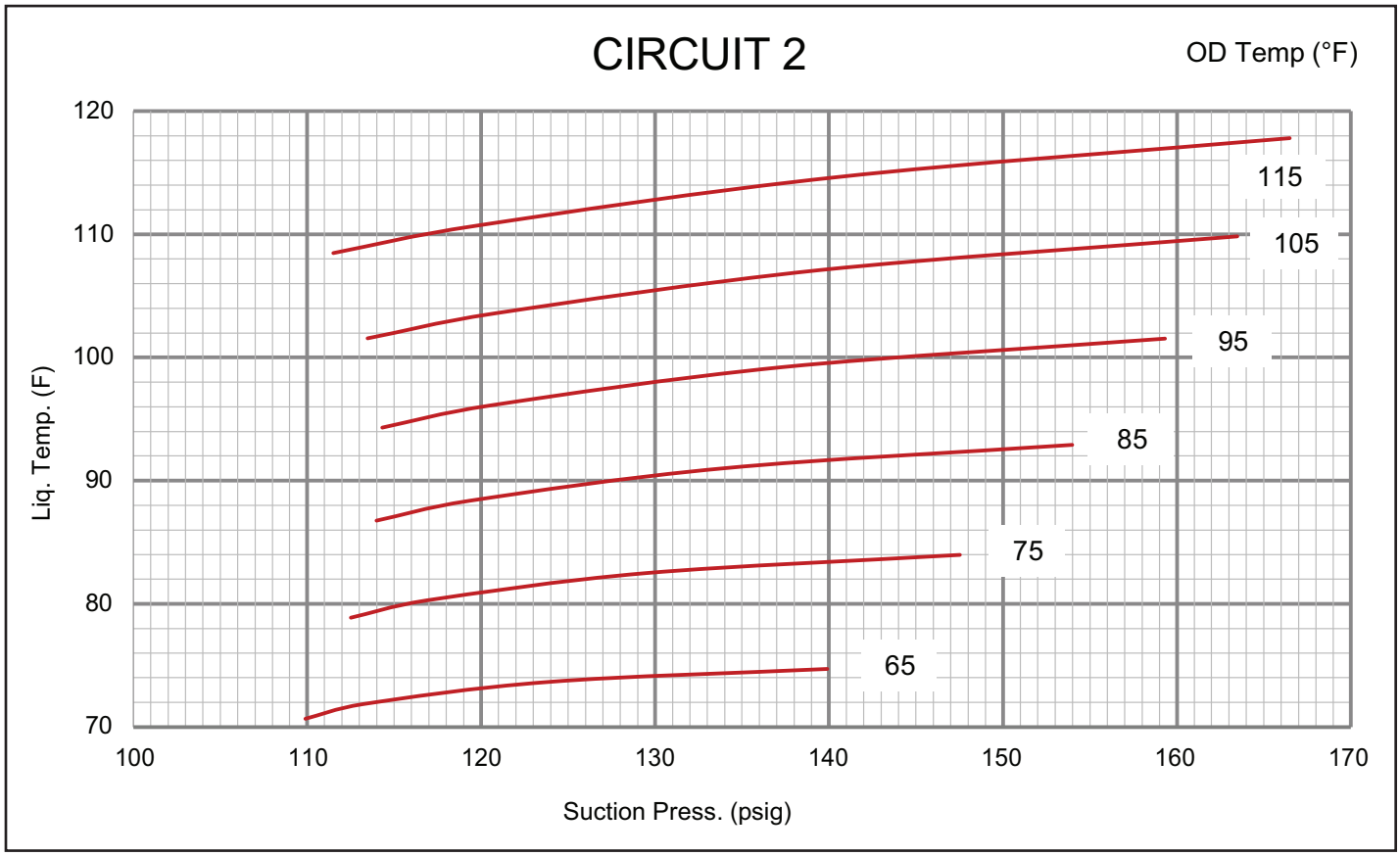

LGX/LCX 210 NO REHEAT CHARGING CURVE CIRCUIT 3 - ALL-ALUMINUM ID & OD COIL - 581448-01

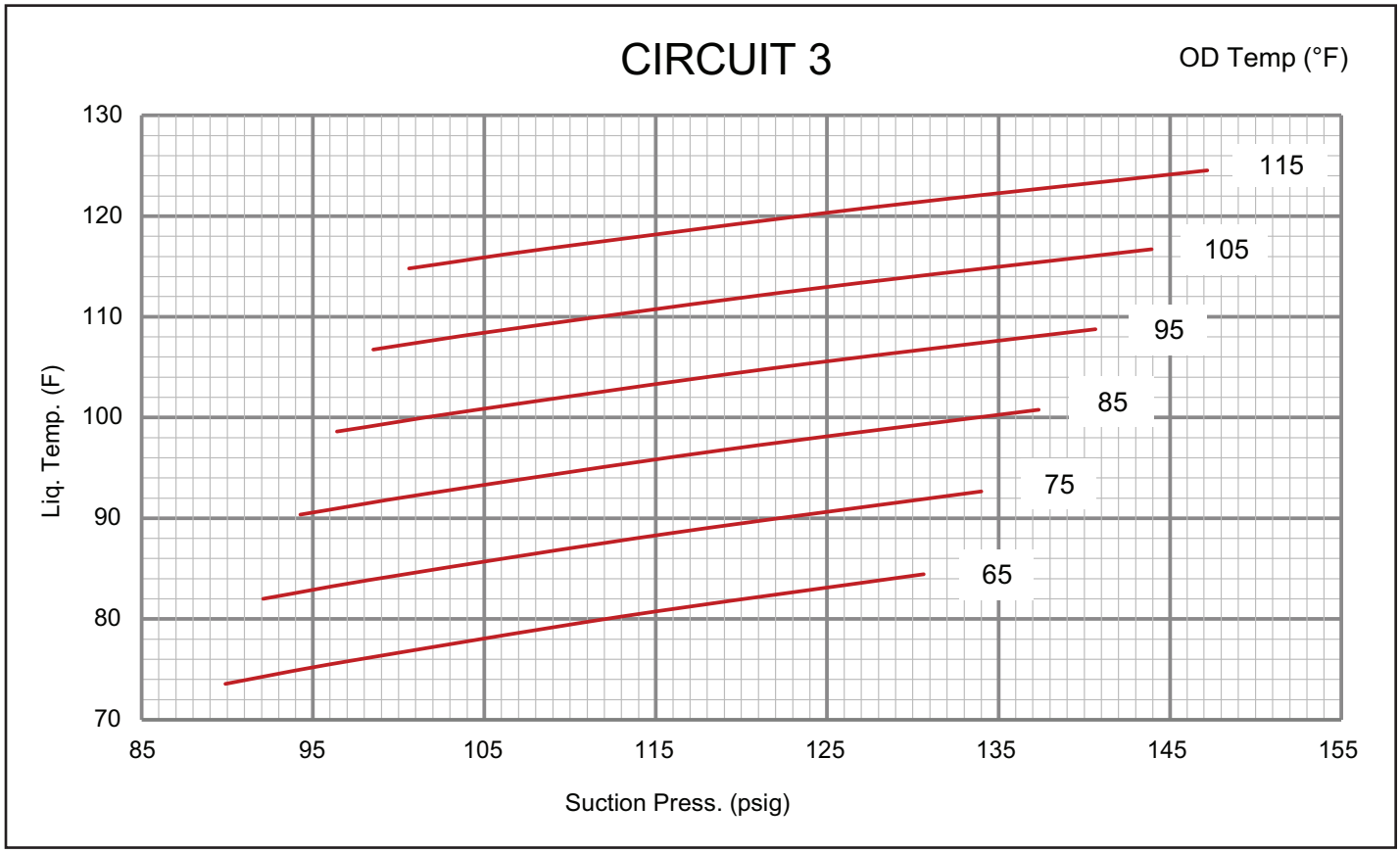

TABLE 8

LGX/LCX 240 NO REHEAT NORMAL OPERATING PRESSURES - ALL-ALUMINUM ID & OD COIL - 581452-01

	Outdoor Coil Entering Air Temperature											
	65°F		75°F		85°F		95°F		105°F		115°F	
	Suct (psig)	Disc (psig)	Suct (psig)	Disc (psig)	Suct (psig)	Disc (psig)	Suct (psig)	Disc (psig)	Suct (psig)	Disc (psig)	Suct (psig)	Disc (psig)
Circuit 1	108	226	110	264	111	305	111	350	110	400	109	453
	112	228	115	266	117	308	119	354	119	404	119	458
	122	231	127	270	131	313	135	360	138	411	140	467
	132	235	140	275	147	319	153	367	158	419	163	476
Circuit 2	108	234	110	271	111	312	111	357	110	405	109	458
	113	235	116	273	118	314	119	360	120	410	120	463
	125	239	129	278	133	321	136	368	139	419	141	473
	137	244	143	284	149	328	154	376	159	429	163	485
Circuit 3	91	237	93	273	94	314	96	358	97	407	99	460
	96	240	98	277	100	318	102	363	105	412	107	466
	106	246	110	284	114	326	117	373	121	424	125	479
	119	253	124	292	130	336	135	384	140	436	145	492

LGX/LCX 240 NO REHEAT CHARGING CURVE CIRCUIT 1 - ALL-ALUMINUM ID & OD COIL - 581449-01

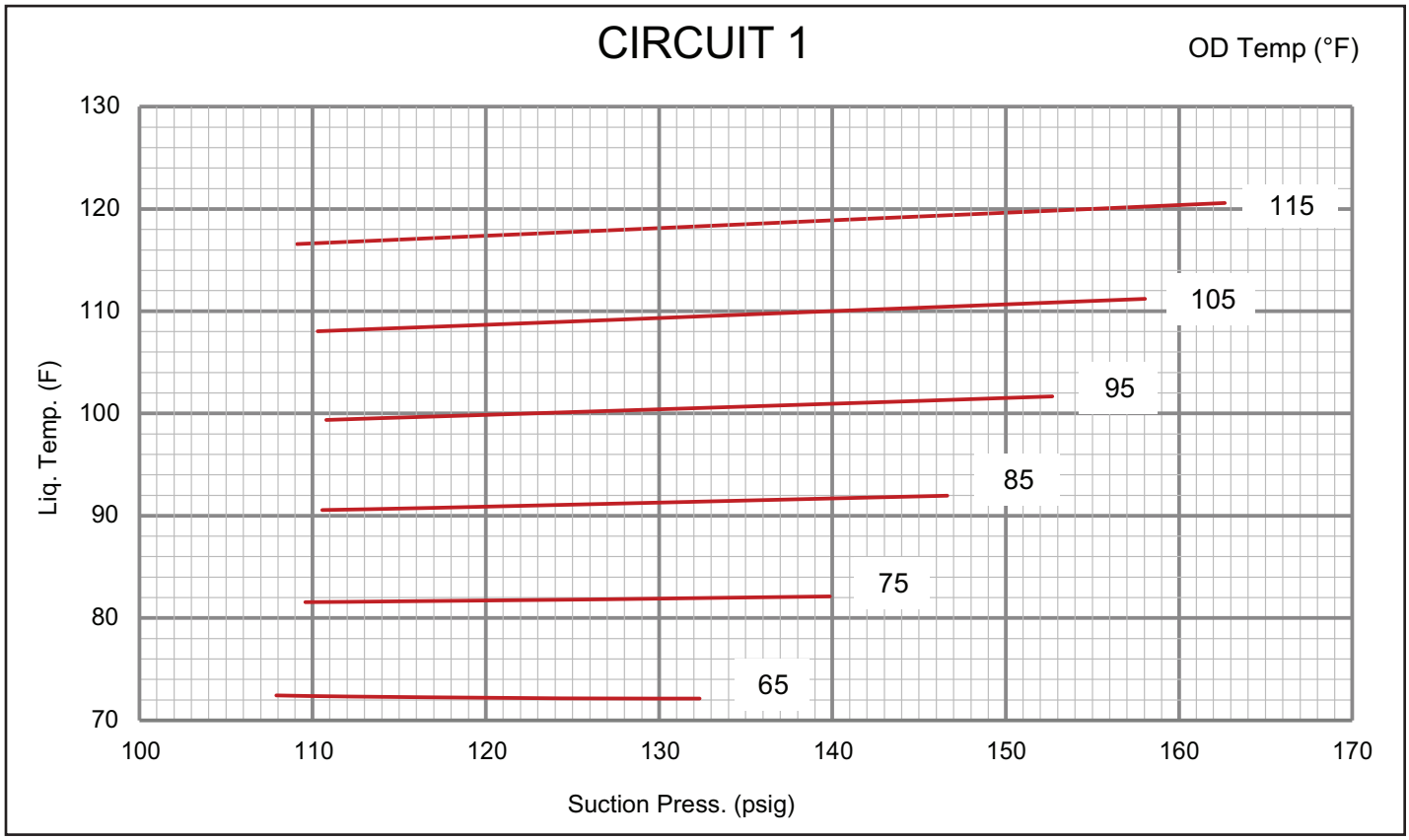

LGX/LCX 240 NO REHEAT CHARGING CURVE CIRCUIT 2 - ALL-ALUMINUM ID & OD COIL - 581449-01

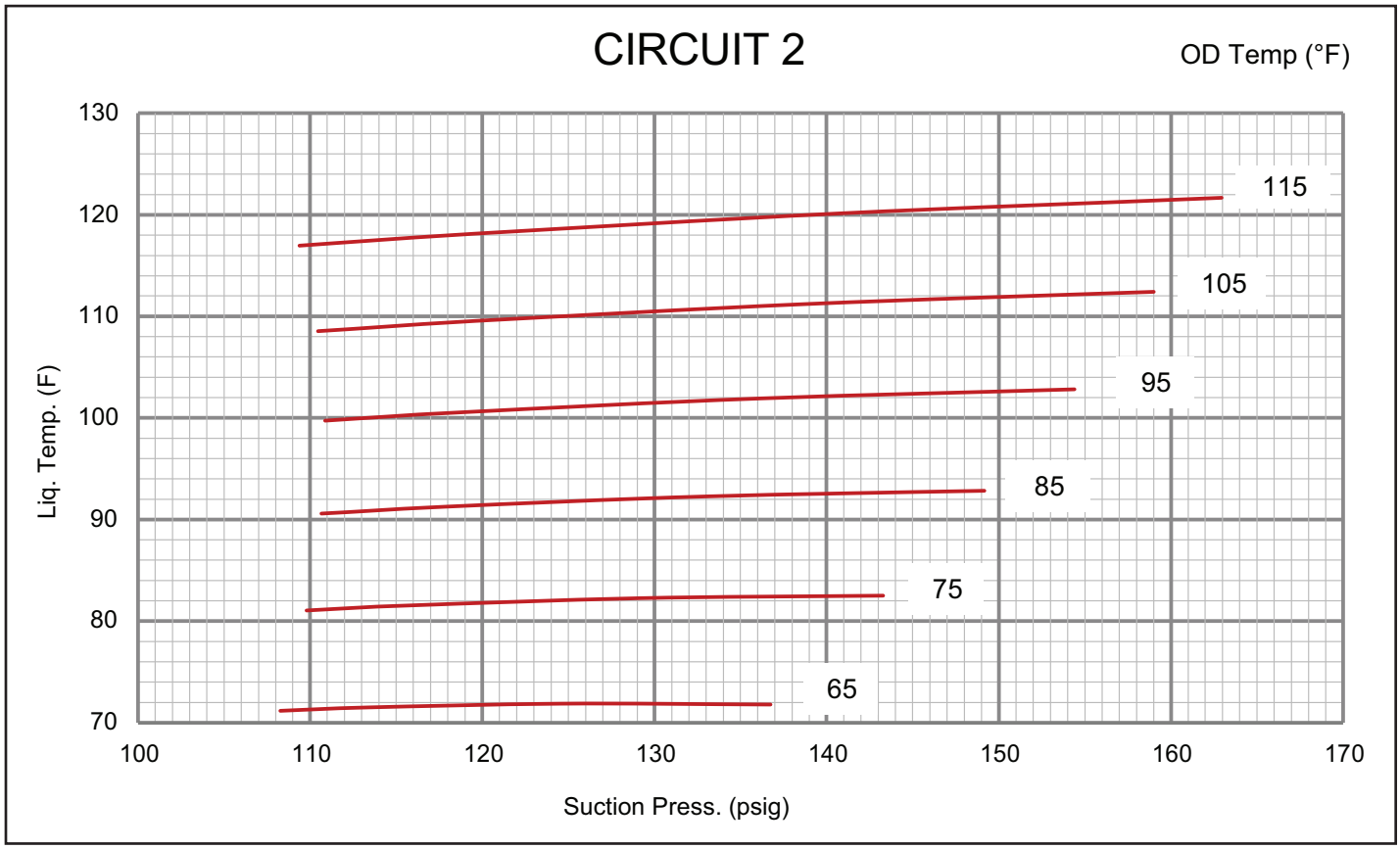

LGX/LCX 240 NO REHEAT CHARGING CURVE CIRCUIT 3 - ALL-ALUMINUM ID & OD COIL - 581449-01

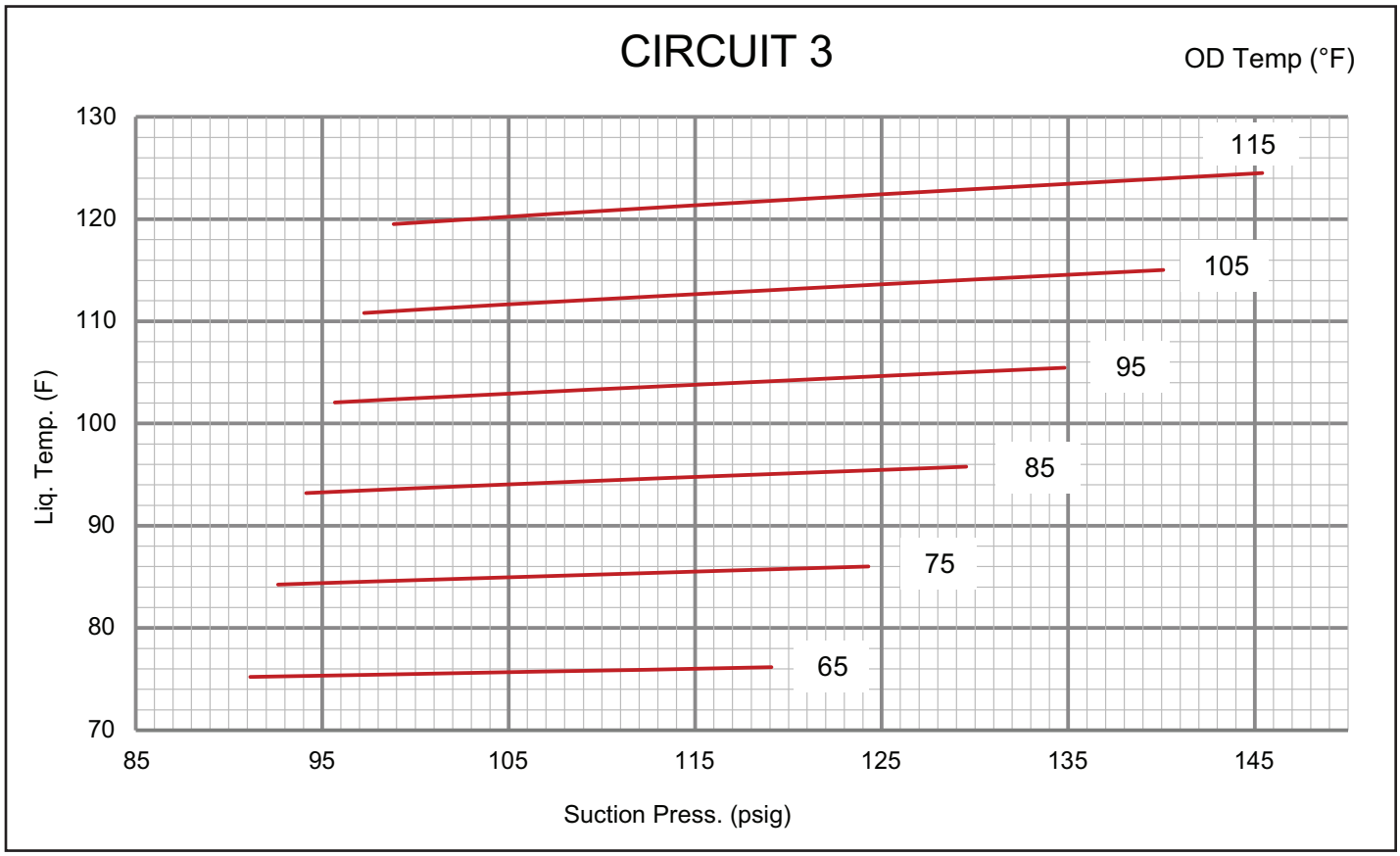

TABLE 9

LGX/LCX 300 NO REHEAT NORMAL OPERATING PRESSURES ALL - ALUMINUM ID & OD COIL - 581454-01

	Outdoor Coil Entering Air Temperature											
	65°F		75°F		85°F		95°F		105°F		115°F	
	Suct (psig)	Disc (psig)	Suct (psig)	Disc (psig)	Suct (psig)	Disc (psig)	Suct (psig)	Disc (psig)	Suct (psig)	Disc (psig)	Suct (psig)	Disc (psig)
Circuit 1	106	230	108	267	110	309	111	356	111	407	111	463
	113	232	116	270	118	313	120	360	121	413	122	470
	129	238	133	278	136	322	139	371	141	425	143	484
	145	245	150	286	155	332	159	383	163	438	166	499
Circuit 2	107	236	109	273	110	314	111	360	112	411	112	466
	114	240	117	277	119	319	121	366	122	417	122	472
	131	248	134	286	137	329	140	377	142	429	143	486
	148	257	153	296	157	340	160	389	163	442	166	500
Circuit 3	89	238	90	274	91	315	92	361	93	413	94	470
	93	240	95	276	96	318	97	365	99	417	101	475
	107	246	109	284	111	327	113	375	116	428	118	487
	126	255	129	294	132	338	135	387	138	442	141	502
Circuit 4	89	244	90	280	91	321	92	368	93	421	94	479
	94	247	95	284	96	326	98	373	99	426	101	485
	107	256	109	293	111	336	114	385	116	439	119	499
	125	267	128	305	131	350	135	400	138	455	142	516

LGX/LCX 300 NO REHEAT CHARGING CURVE CIRCUIT 1 - ALL-ALUMINUM ID & OD COIL - 581453-01

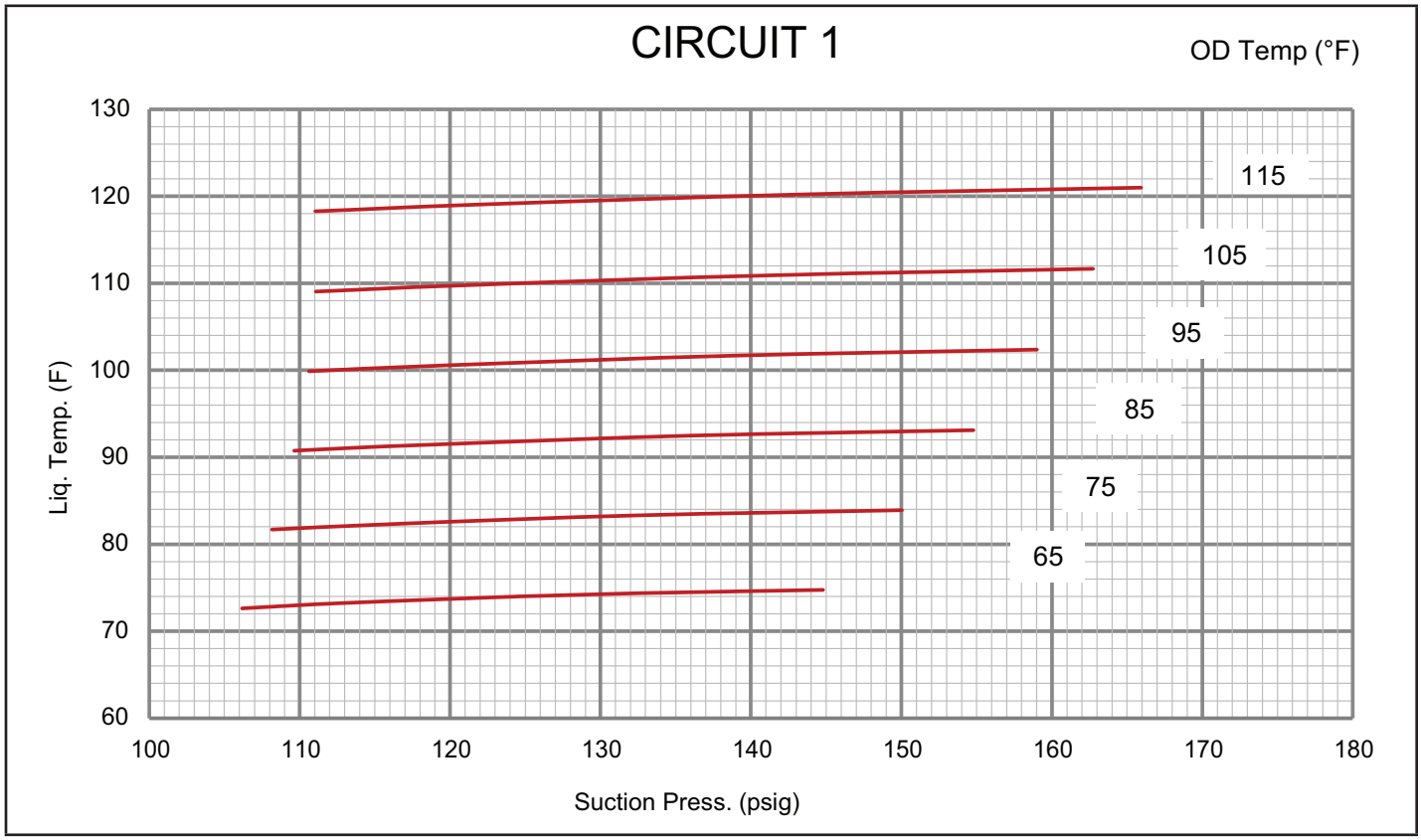

LGX/LCX 300S NO REHEAT CHARGING CURVE CIRCUIT 2 - ALL-ALUMINUM ID & OD COIL - 581453-01

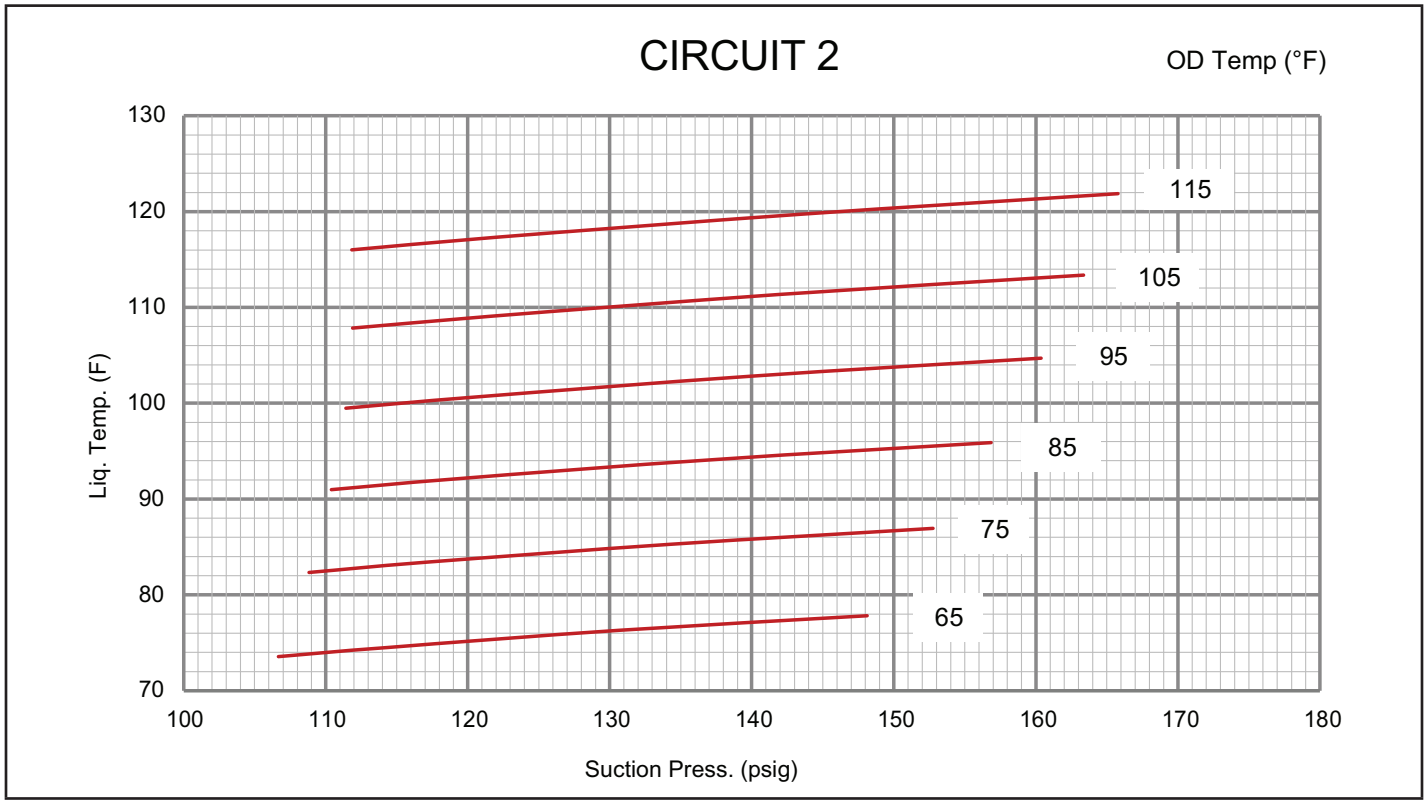

LGX/LCX 300S NO REHEAT CHARGING CURVE CIRCUIT 3 - ALL-ALUMINUM ID & OD COIL - 581453-01

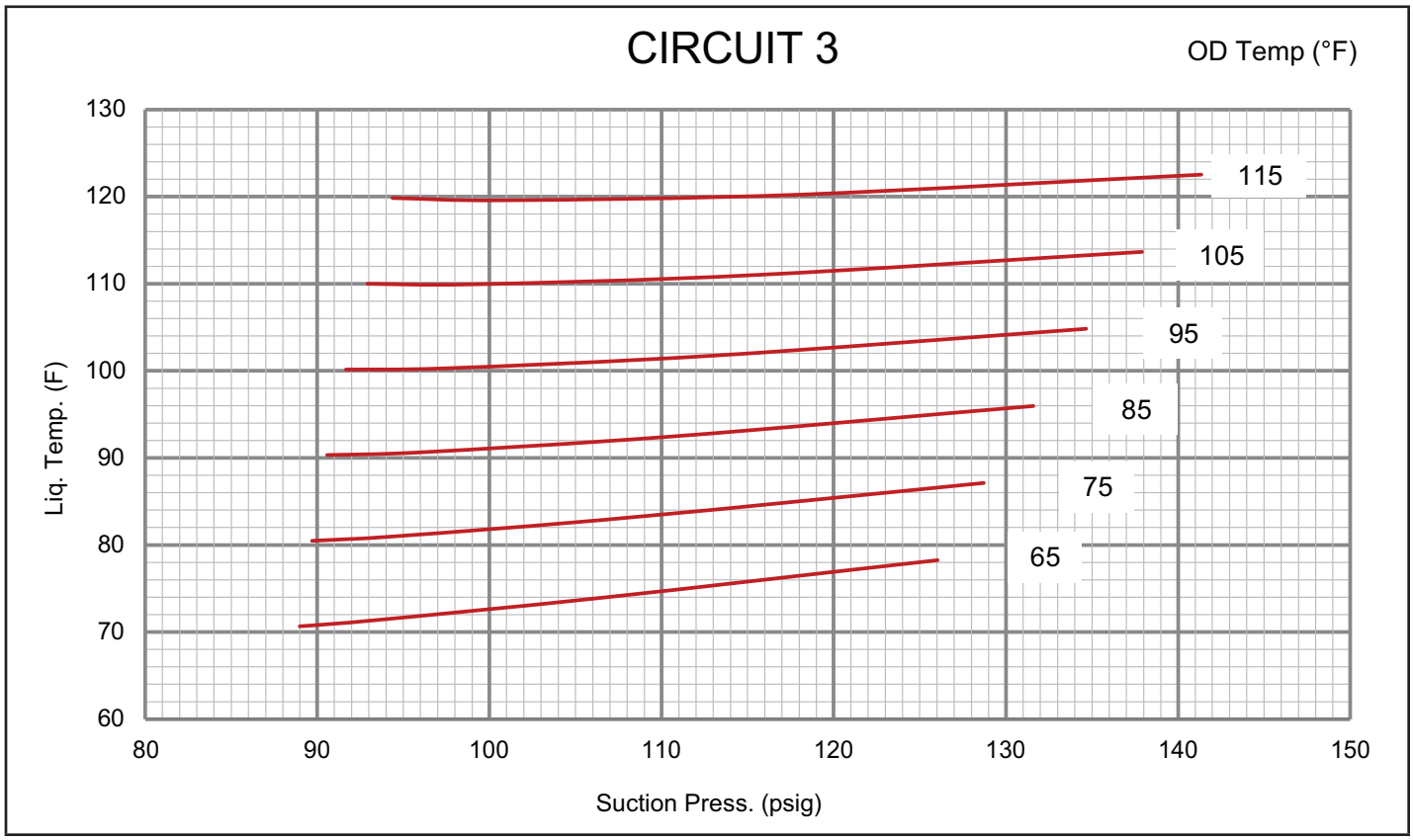

LGX/LCX 300S NO REHEAT CHARGING CURVE CIRCUIT 4 - ALL-ALUMINUM ID & OD COIL - 581453-01

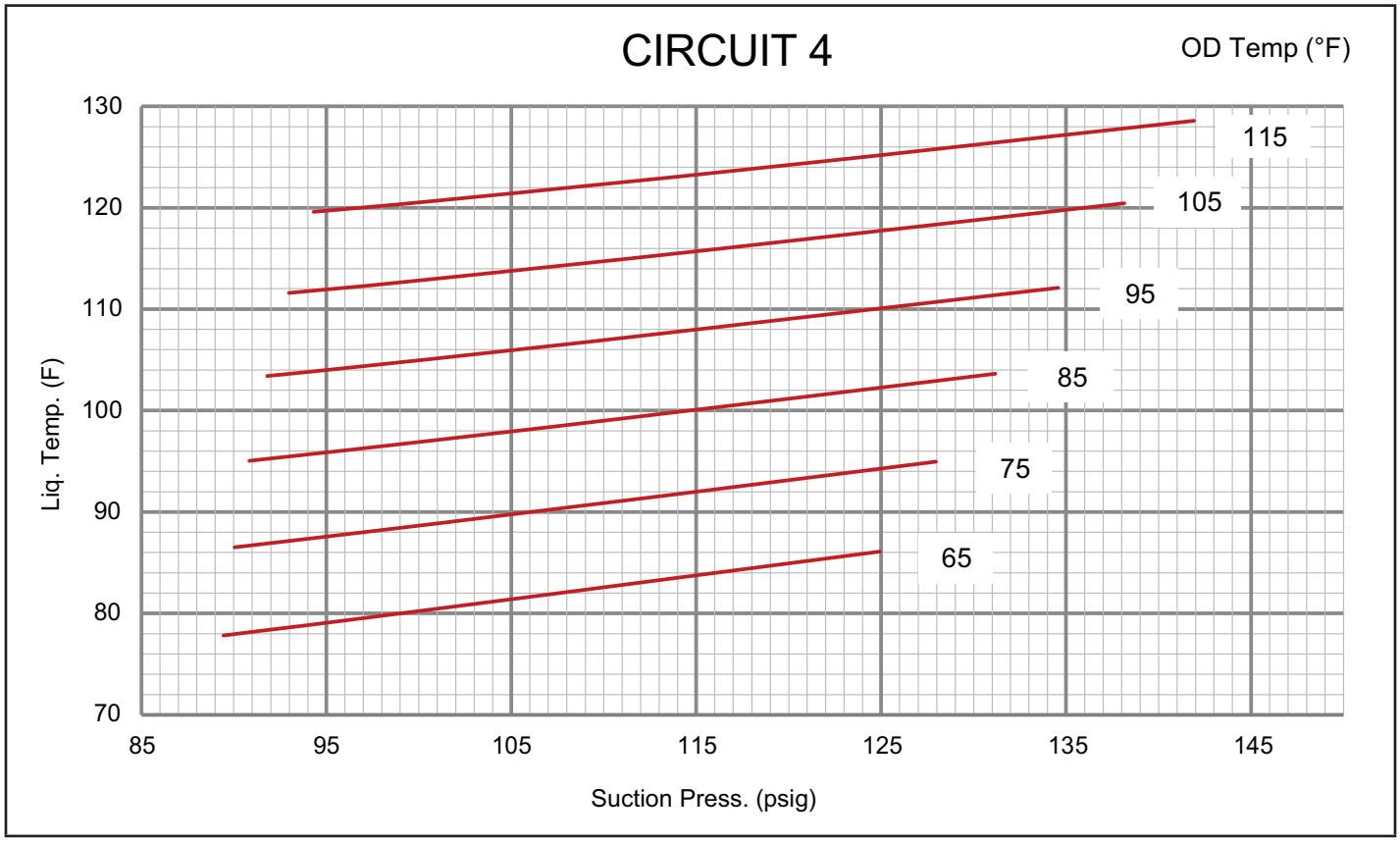

TABLE 10
LGX/LCX 180 REHEAT NORMAL OPERATING PRESSURES - ALL-ALUMINUM OD COIL - 581295-01

	Outdoor Coil Entering Air Temperature											
	65°F		75°F		85°F		95°F		105°F		115°F	
	Suct (psig)	Disc (psig)	Suct (psig)	Disc (psig)	Suct (psig)	Disc (psig)	Suct (psig)	Disc (psig)	Suct (psig)	Disc (psig)	Suct (psig)	Disc (psig)
Circuit 1	106	225	107	261	108	302	109	349	110	401	111	458
	114	226	115	261	116	302	118	348	119	400	119	457
	131	231	133	266	135	306	136	355	137	402	139	458
	151	241	153	275	155	314	157	359	158	408	160	464
Circuit 2	108	231	109	268	110	309	111	355	112	405	114	459
	116	233	117	270	119	311	120	357	121	407	123	461
	134	239	135	276	137	317	138	364	141	412	143	466
	152	248	154	284	157	325	159	371	161	420	163	474
Circuit 3	105	241	106	280	107	323	108	372	109	425	109	483
	114	244	115	282	116	326	117	374	118	427	118	485
	132	251	134	290	135	333	135	384	137	434	138	491
	152	262	154	300	156	343	157	391	158	444	159	501

LGX/LCX 180 REHEAT CHARGING CURVE CIRCUIT 1 - ALL-ALUMINUM OD COIL - 581296-01

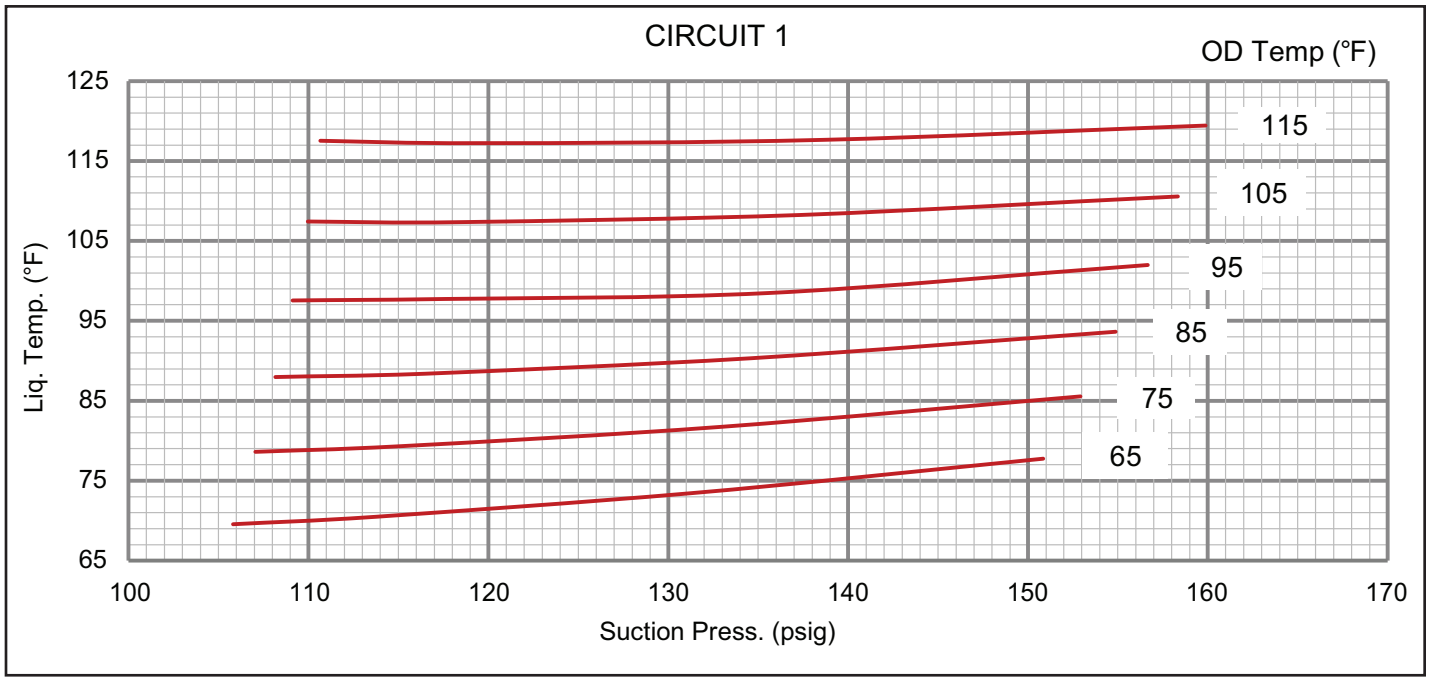

LGX/LCX 180 REHEAT CHARGING CURVE CIRCUIT 2 - ALL-ALUMINUM OD COIL - 581296-01

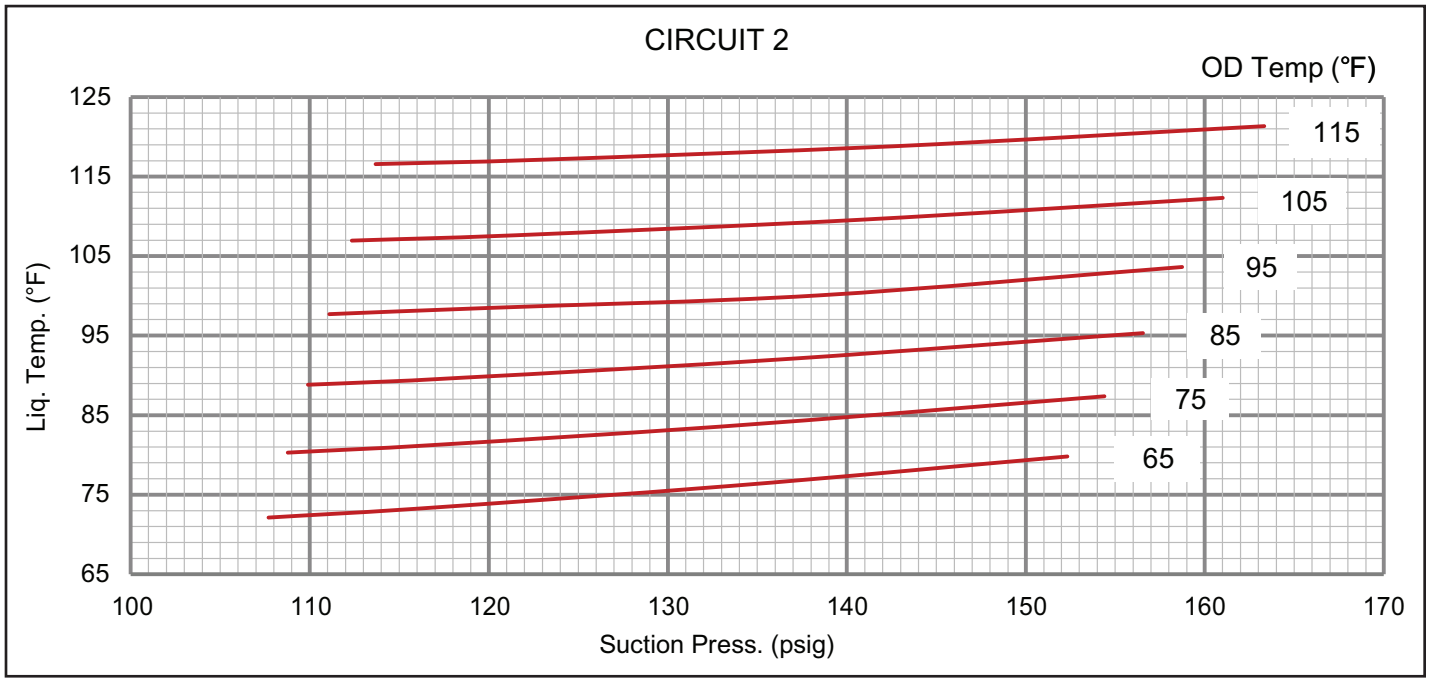

LGX/LCX 180 REHEAT CHARGING CURVE CIRCUIT 3 - ALL-ALUMINUM OD COIL - 581296-01

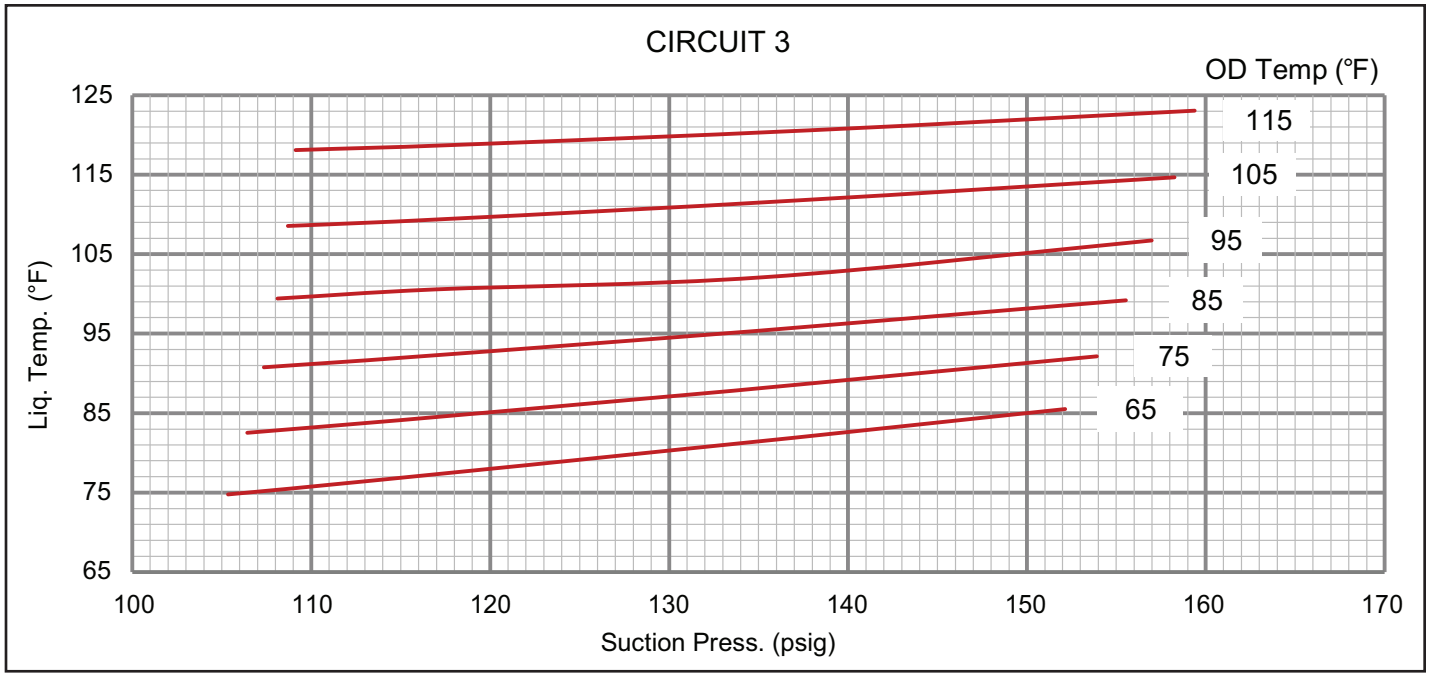

TABLE 11
LGX/LCX 210 REHEAT NORMAL OPERATING PRESSURES - ALL-ALUMINUM OD COIL - 581297-01

	Outdoor Coil Entering Air Temperature											
	65°F		75°F		85°F		95°F		105°F		115°F	
	Suct (psig)	Disc (psig)	Suct (psig)	Disc (psig)	Suct (psig)	Disc (psig)	Suct (psig)	Disc (psig)	Suct (psig)	Disc (psig)	Suct (psig)	Disc (psig)
Circuit 1	100	235	102	274	104	318	106	368	108	423	110	484
	107	237	109	275	112	319	114	368	116	423	118	484
	123	244	126	281	129	324	131	370	135	427	138	487
	142	257	145	294	149	336	152	384	156	437	160	496
Circuit 2	102	237	103	275	105	318	106	367	108	420	110	479
	109	241	110	278	112	322	114	370	116	423	118	482
	124	250	127	288	129	330	131	377	134	432	137	490
	143	262	146	300	149	342	152	390	155	443	158	501
Circuit 3	102	247	104	287	105	333	107	385	109	441	111	503
	110	250	112	290	114	336	116	387	118	443	120	504
	127	260	129	300	132	344	134	392	138	449	141	509
	145	275	148	313	152	357	155	406	159	460	162	519

LGX/LCX 210 REHEAT CHARGING CURVE CIRCUIT 1 - ALL-ALUMINUM OD COIL - 581298-01

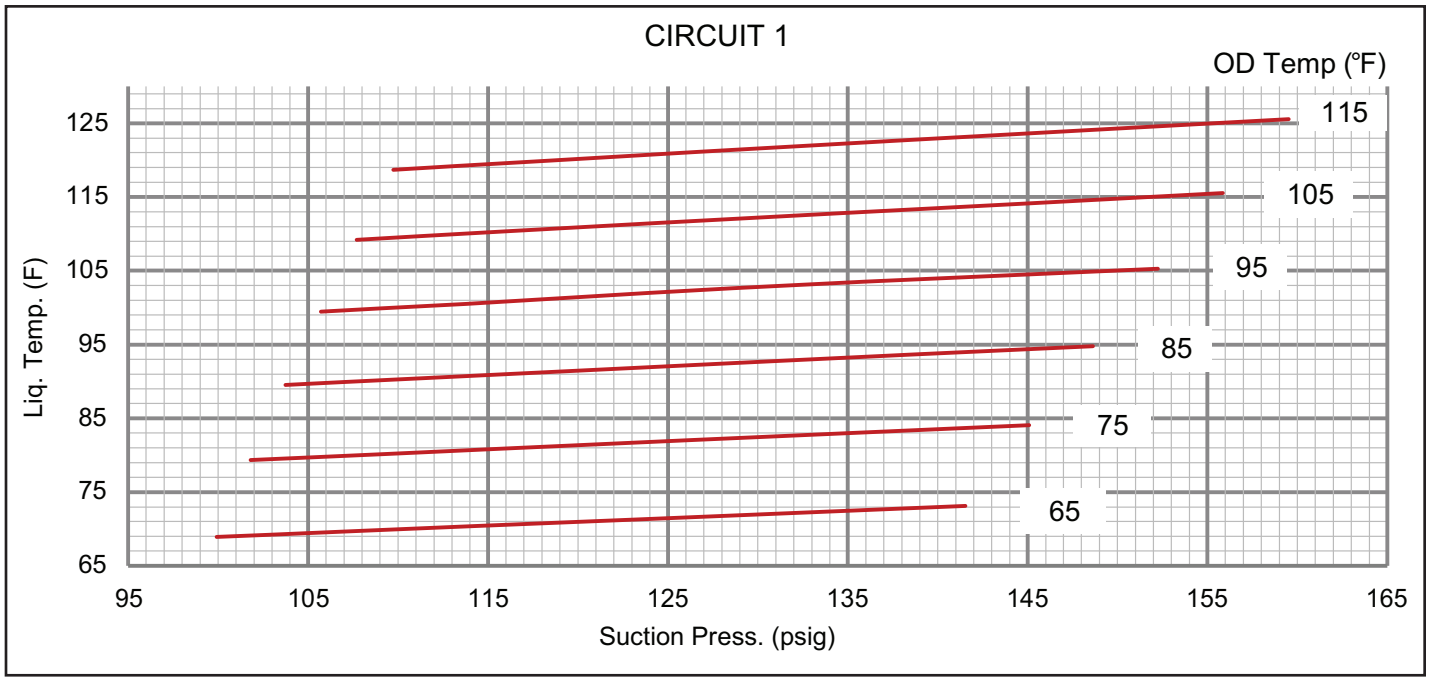

LGX/LCX 210 REHEAT CHARGING CURVE CIRCUIT 2 - ALL-ALUMINUM OD COIL - 581298-01

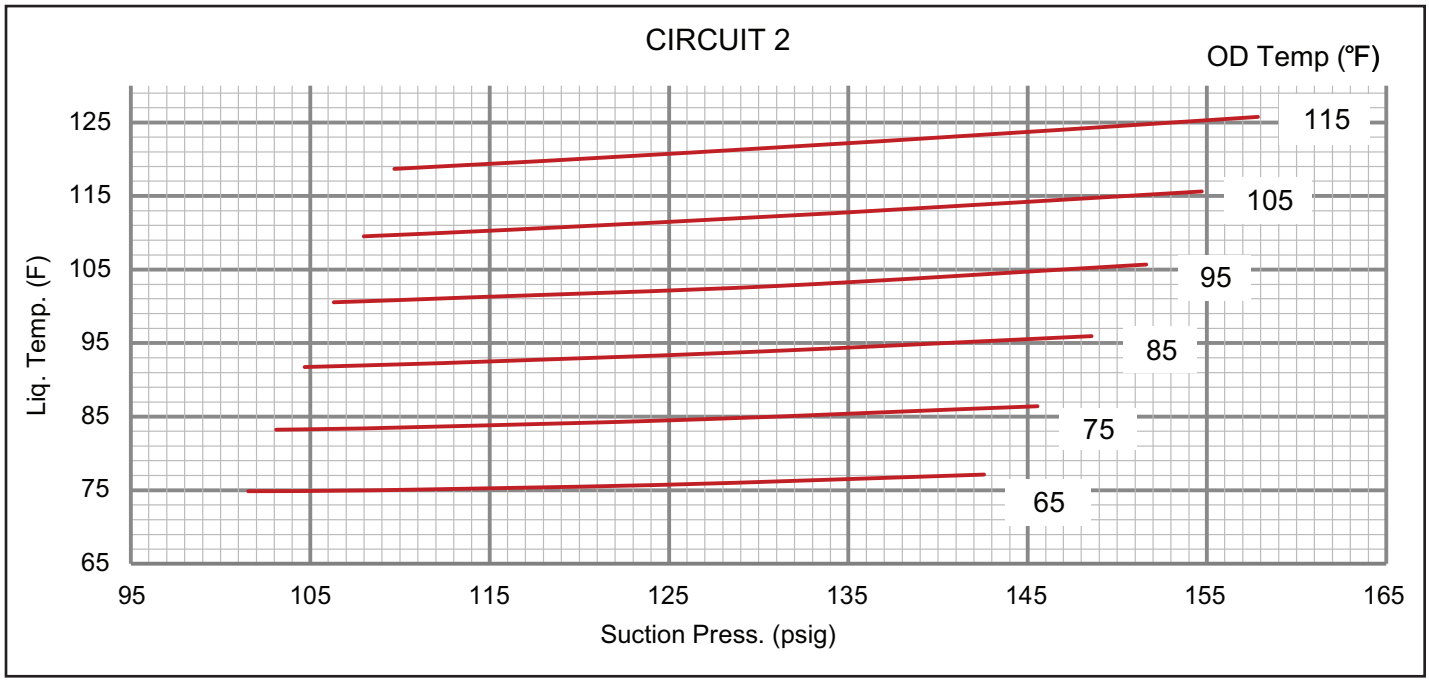

LGX/LCX 210 REHEAT CHARGING CURVE CIRCUIT 3 - ALL-ALUMINUM OD COIL - 581298-01

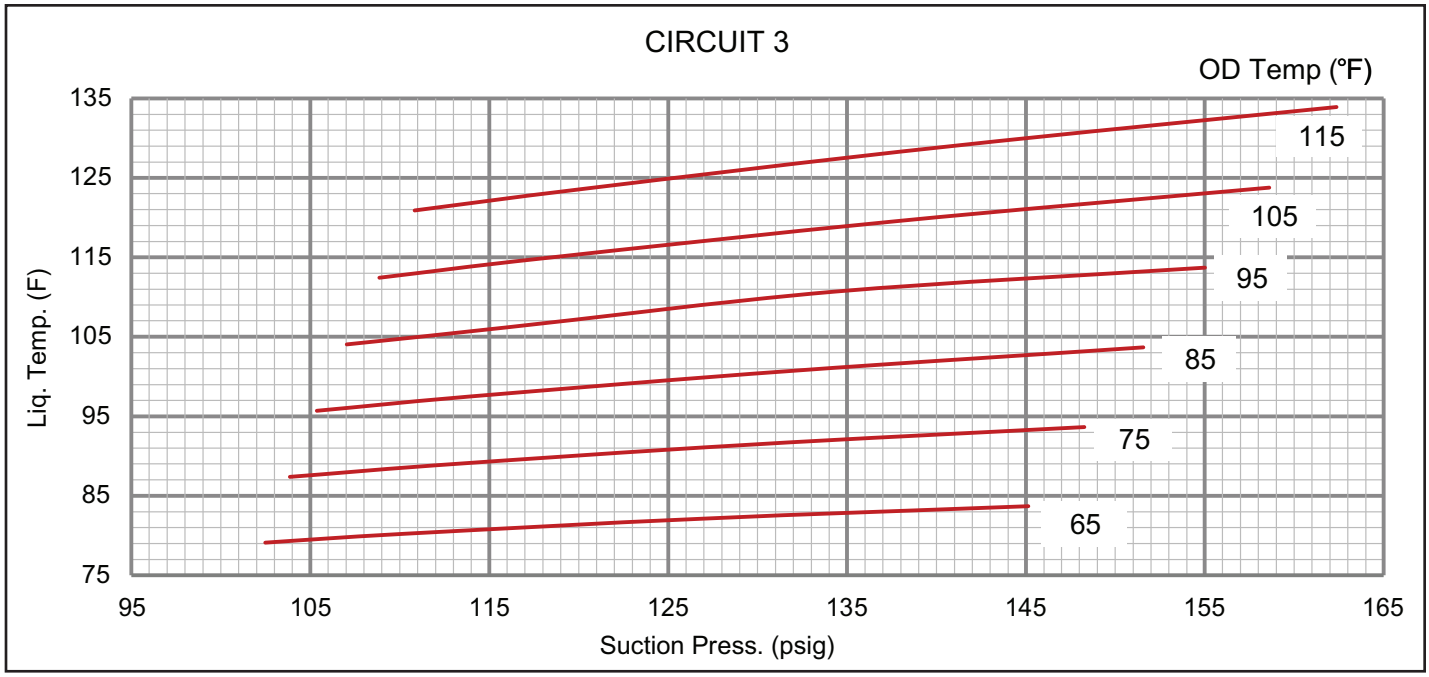

TABLE 12
LGX/LCX 240 REHEAT NORMAL OPERATING PRESSURES - ALL-ALUMINUM OD COIL - 581299-01

	Outdoor Coil Entering Air Temperature											
	65°F		75°F		85°F		95°F		105°F		115°F	
	Suct (psig)	Disc (psig)	Suct (psig)	Disc (psig)	Suct (psig)	Disc (psig)	Suct (psig)	Disc (psig)	Suct (psig)	Disc (psig)	Suct (psig)	Disc (psig)
Circuit 1	97	224	99	261	100	304	101	351	102	404	103	462
	105	228	107	265	109	307	111	354	112	406	113	464
	119	235	123	271	126	313	129	358	131	411	133	468
	134	243	138	278	143	319	146	365	150	416	153	473
Circuit 2	99	229	101	266	103	308	105	355	106	407	108	465
	106	234	108	271	110	313	112	360	114	411	116	468
	121	244	124	280	127	321	129	367	132	419	134	475
	139	252	142	288	145	328	148	374	151	425	154	480
Circuit 3	97	240	99	278	100	322	100	370	101	423	101	481
	104	244	106	282	108	326	109	373	110	426	111	484
	119	254	122	292	125	334	127	381	129	434	131	491
	134	266	138	303	142	345	146	391	149	443	152	499

LGX/LCX 240 REHEAT CHARGING CURVE CIRCUIT 1 - ALL-ALUMINUM OD COIL - 581300-01

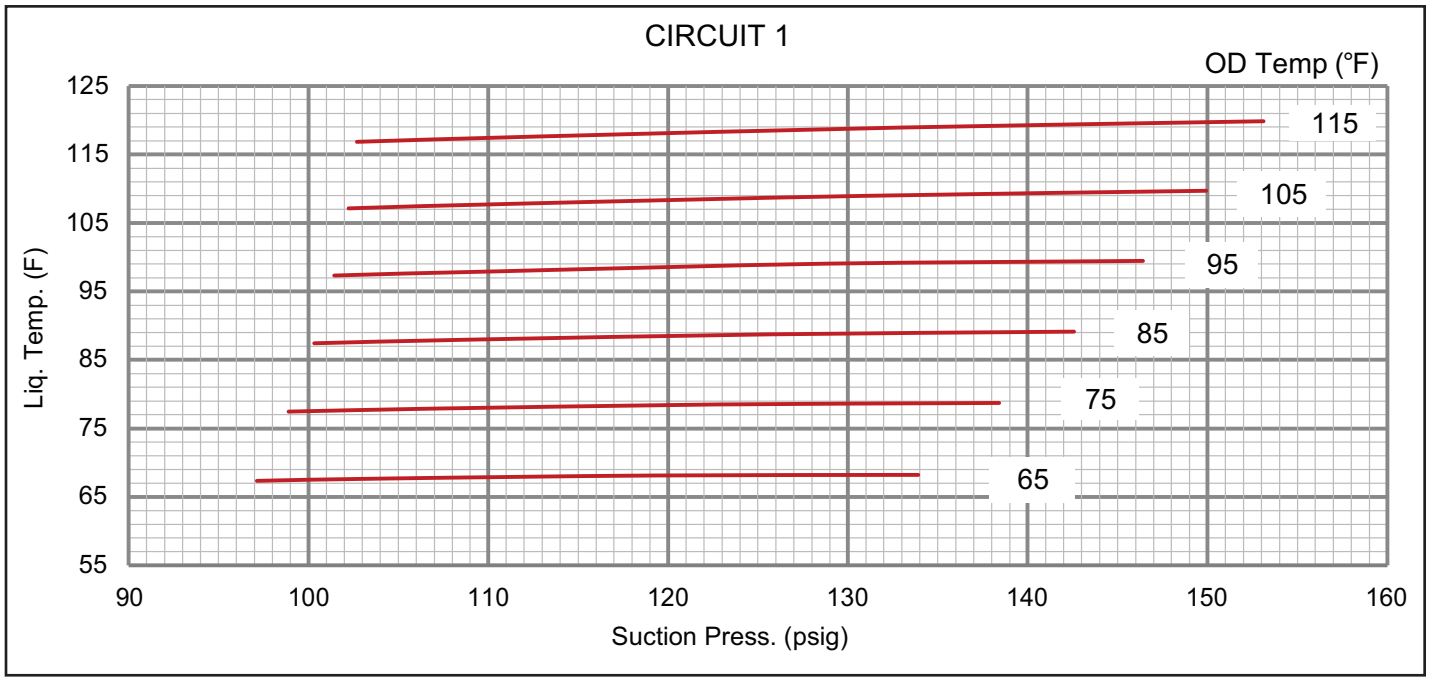

LGX/LCX 240 REHEAT CHARGING CURVE CIRCUIT 2 - ALL-ALUMINUM OD COIL - 581300-01

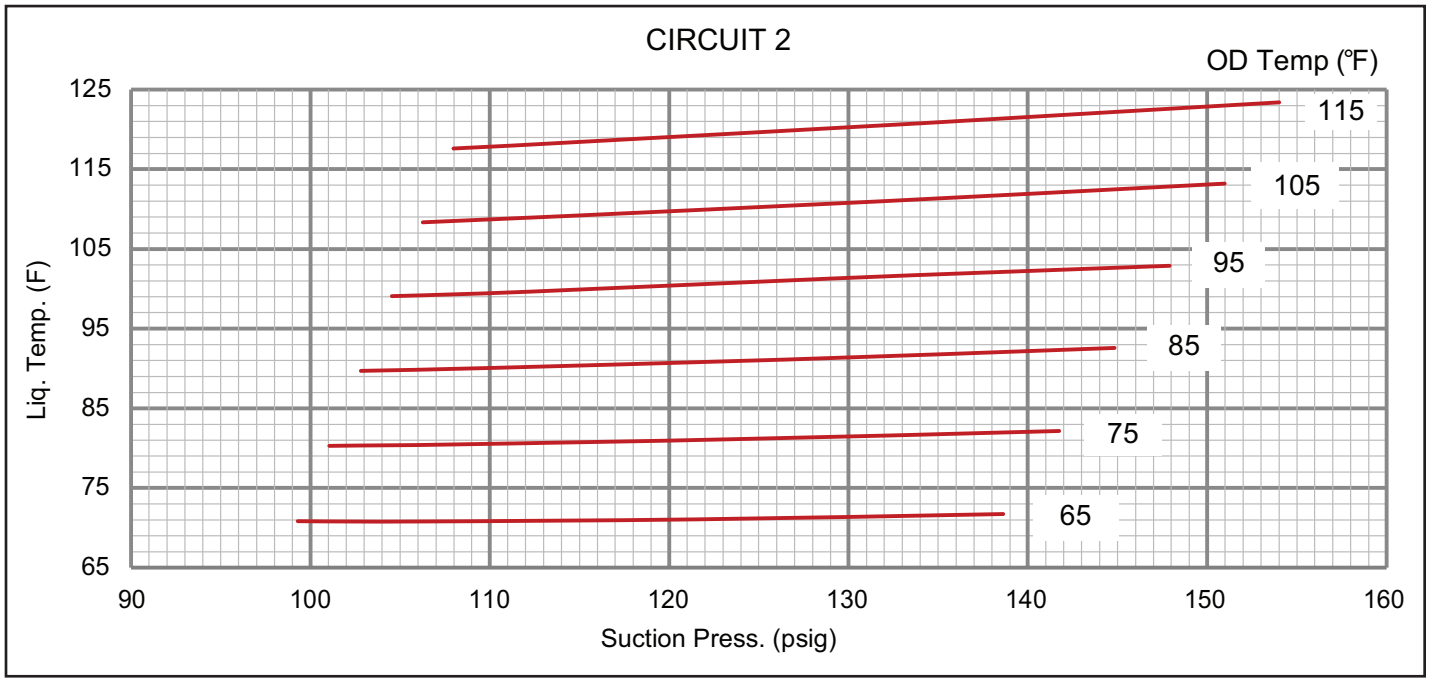

LGX/LCX 240 REHEAT CHARGING CURVE CIRCUIT 3 - ALL-ALUMINUM OD COIL - 581300-01

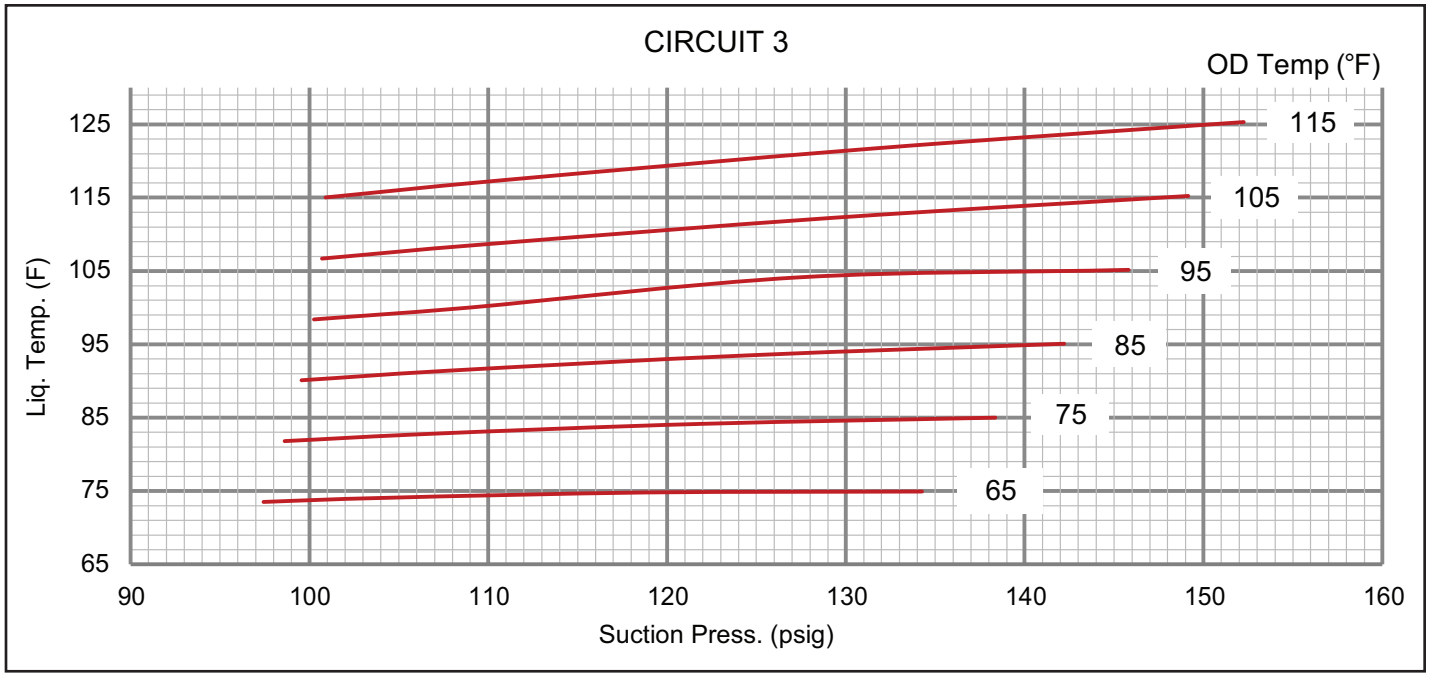

TABLE 13
LGX/LCX 300 REHEAT NORMAL OPERATING PRESSURES - ALL-ALUMINUM OD COIL - 581381-01

	Outdoor Coil Entering Air Temperature											
	65°F		75°F		85°F		95°F		105°F		115°F	
	Suct (psig)	Disc (psig)	Suct (psig)	Disc (psig)	Suct (psig)	Disc (psig)	Suct (psig)	Disc (psig)	Suct (psig)	Disc (psig)	Suct (psig)	Disc (psig)
Circuit 1	100	233	102	269	104	311	106	358	107	410	109	467
	108	236	110	272	112	314	114	361	116	412	118	469
	123	242	126	278	129	319	132	366	134	417	137	474
	138	248	142	284	146	325	149	371	153	422	156	479
Circuit 2	104	238	106	276	108	319	109	367	111	420	112	477
	111	241	113	280	116	323	118	371	119	423	121	481
	126	249	129	287	132	330	135	378	137	431	139	488
	142	256	146	295	149	338	152	385	155	438	158	495
Circuit 3	80	234	82	272	84	315	86	363	88	417	90	476
	87	236	89	273	91	316	93	364	95	418	97	477
	102	242	104	279	106	321	109	369	111	422	113	481
	120	251	122	288	124	330	127	377	129	430	131	488
Circuit 4	87	234	89	272	91	315	92	361	94	412	95	467
	93	238	96	276	98	319	100	365	102	416	103	471
	106	246	109	285	112	327	115	374	118	425	121	480
	120	255	124	294	128	336	132	383	136	434	139	489

LGX/LCX 300 REHEAT CHARGING CURVE CIRCUIT 1 - ALL-ALUMINUM OD COIL - 581380-01

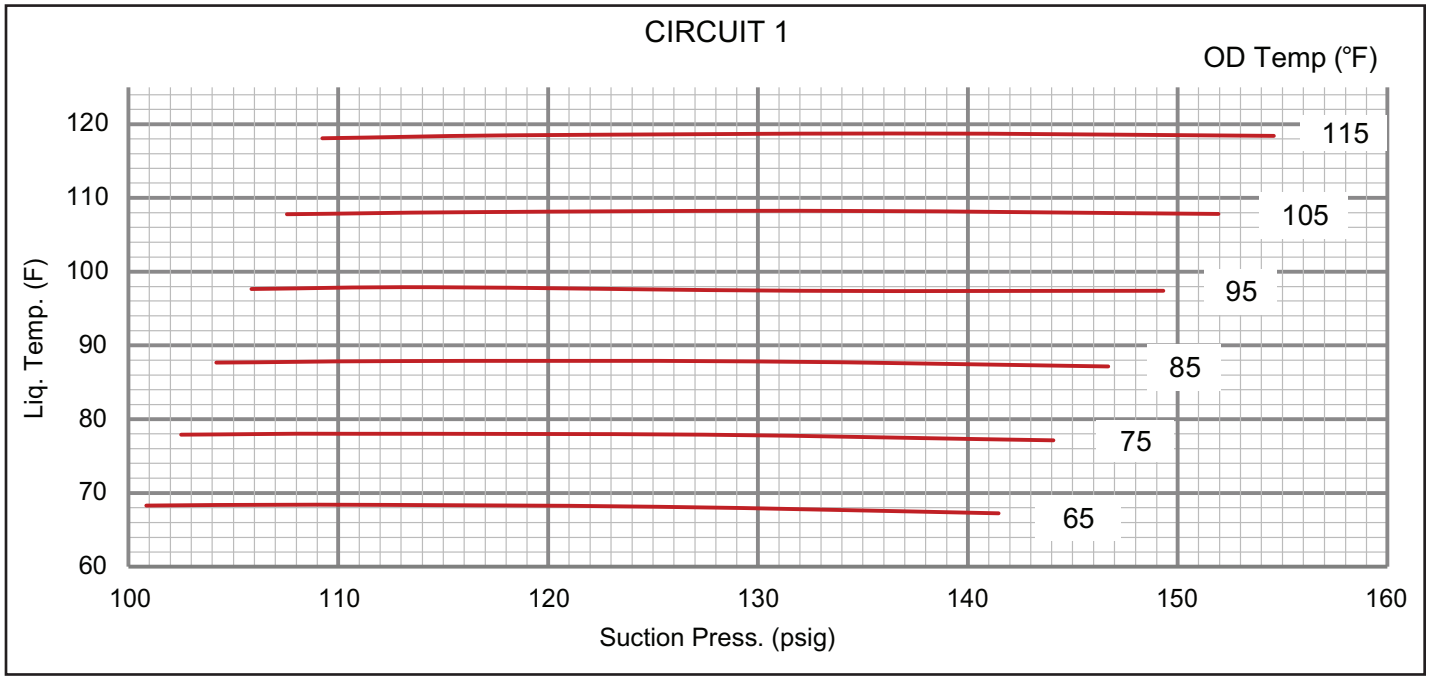

LGX/LCX 300 REHEAT CHARGING CURVE CIRCUIT 2 - ALL-ALUMINUM OD COIL - 581380-01

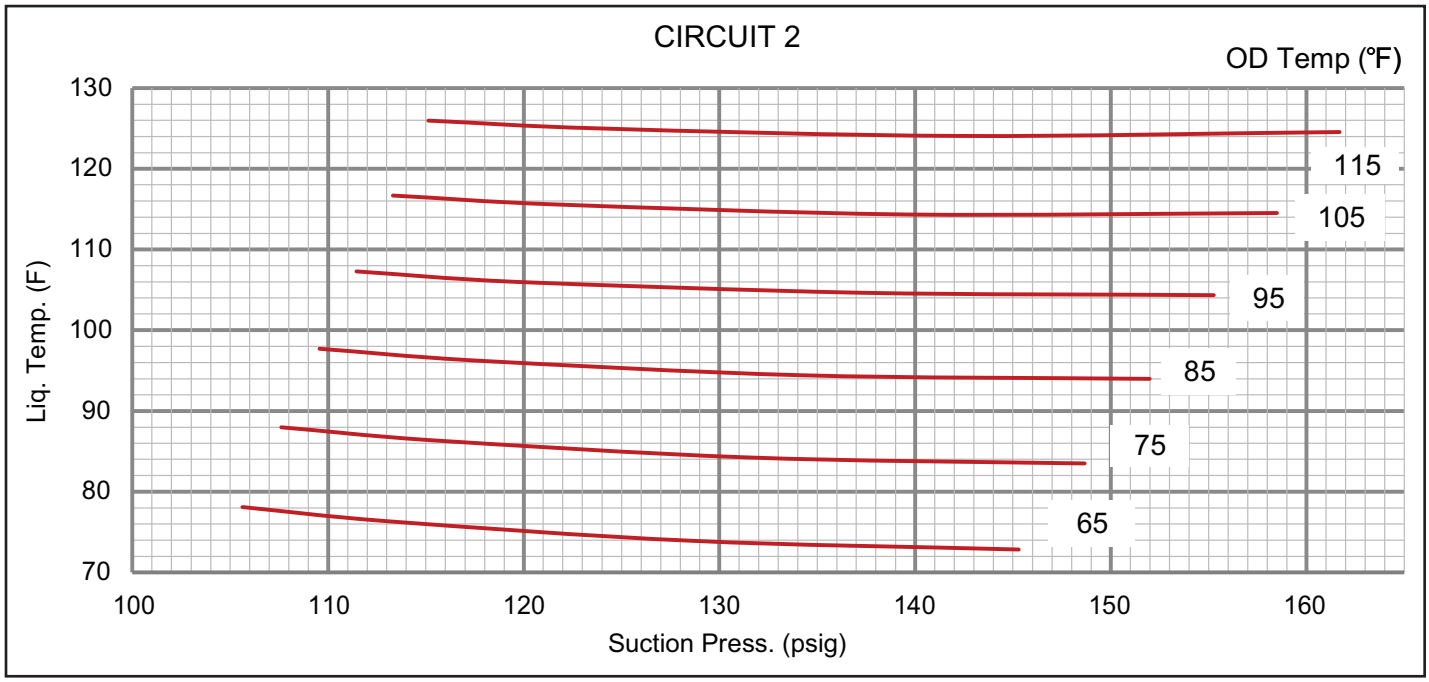

LGX/LCX 300 REHEAT CHARGING CURVE CIRCUIT 3 - ALL-ALUMINUM OD COIL - 581380-01

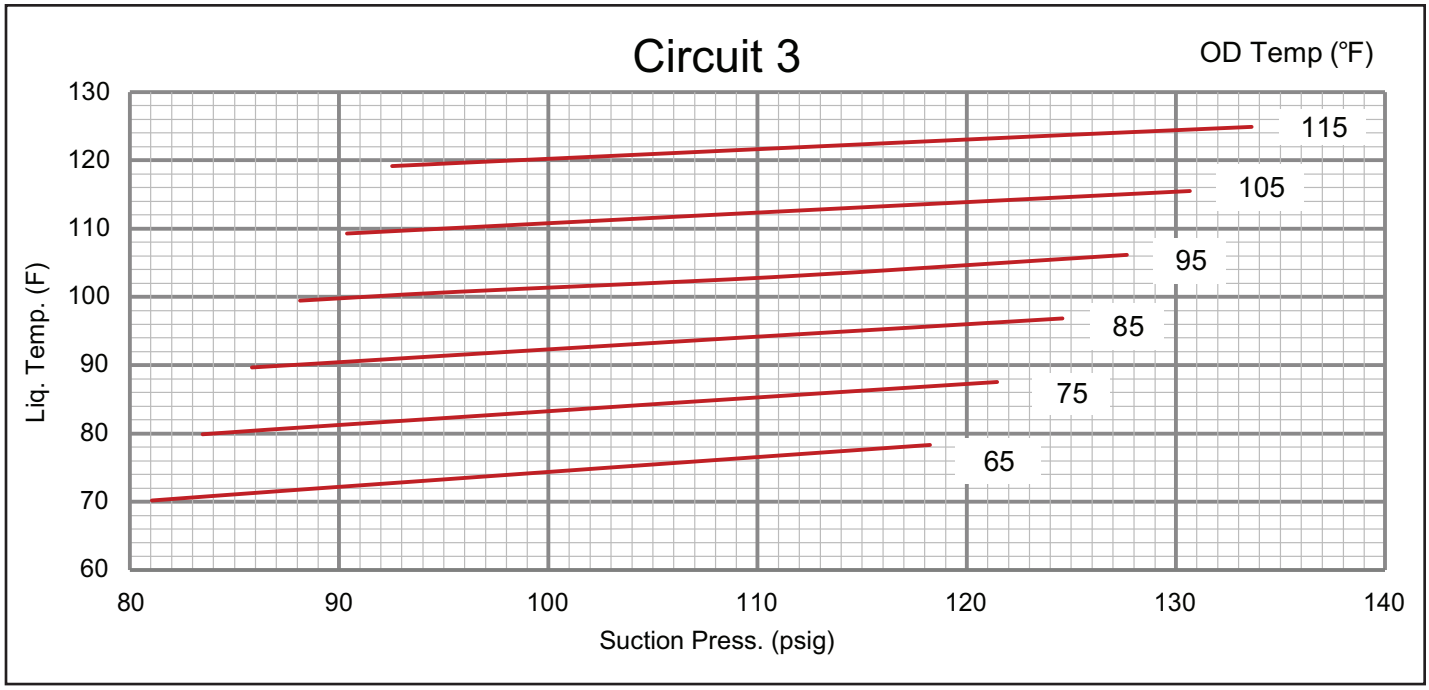

LGX/LCX 300 REHEAT CHARGING CURVE CIRCUIT 4 - ALL-ALUMINUM OD COIL - 581380-01

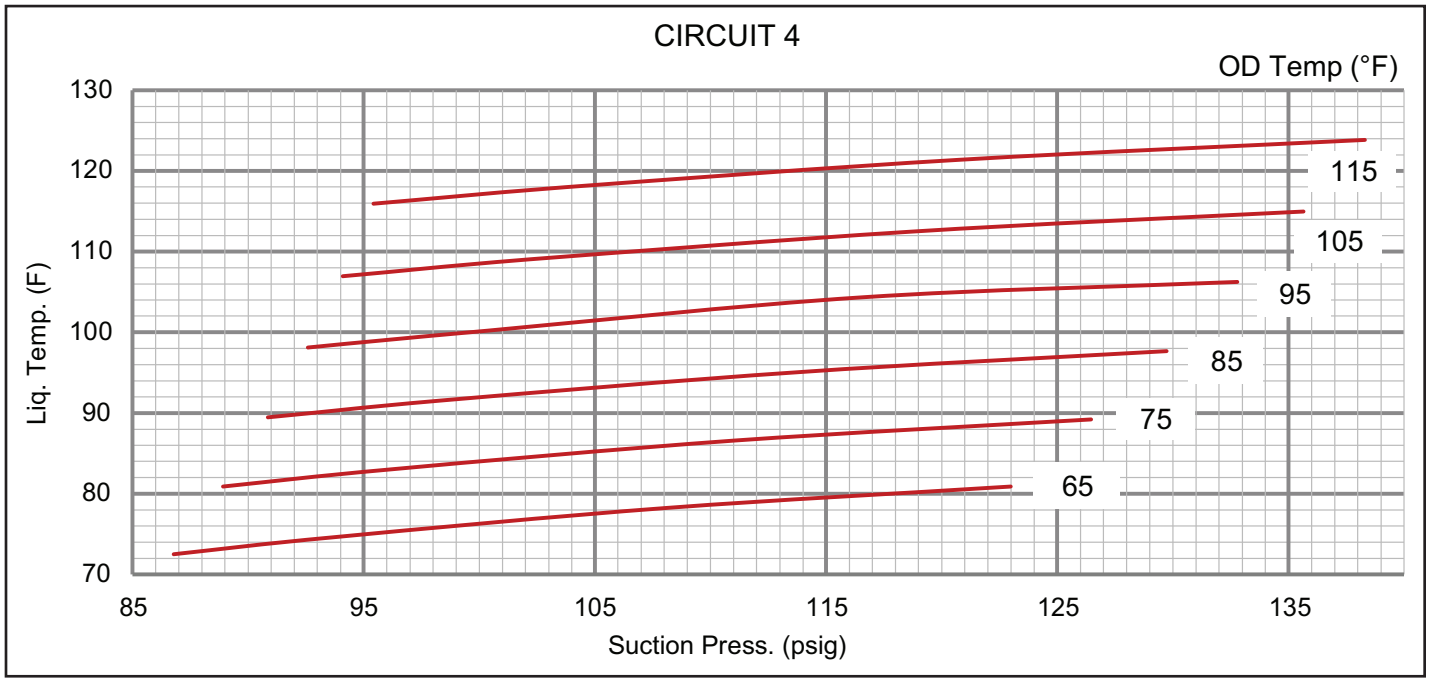

F-Compressor Controls

See unit wiring diagram to determine which controls are used on each unit. Optional controls are identified on wiring diagrams by arrows at junction points.

1 - High Pressure Switches (S4, S7, S28, S96)

The compressor circuit is protected by a high pressure switch which opens at 640 psig ± 10 psig (4413 kPa ± 70 kPa) and automatically resets at 475 psig ± 20 psig (3275kPa ± 138 kPa).

2 - Low Pressure Switches (S87, S88, S97, S98)

The compressor circuit is protected by a low pressure switch. Switch opens at 40 psig ± 5 psig (276 ± 34 kPa) and automatically resets at 90 psig ± 5 psig (621 kPa ± 34 kPa).

3 - Crankcase Heater (HR1, HR2, HR5, HR11)

Units have compressors which contain a belly band compressor oil heater which must be on 24 hours before running compressors. Energize by setting thermostat so that there is no cooling demand, to prevent compressor from cycling, and apply power to unit.

4 - Thermal Protector (S5)

Each fixed-speed compressor is protected by an internal thermal protector switch.

5 - Condenser Fan Operation

180S, 210S Units-

First-stage thermostat demand will energize condenser fans 1, 2 and 3. Fans will continue to operate with additional thermostat demands. See FIGURE 26.

240S Unit

First-stage thermostat demand will energize condenser fans 1, 2, 3 and 4. Fans will continue to operate with additional thermostat demands. See FIGURE 27.

300S Unit

First-stage thermostat demand will energize condenser fans 1, 2 and 3. Second-stage cooling demand will energize condenser fans 4, 5 and 6. See FIGURE 28.

Prognostic Sensors

Temperature thermistor sensors are located on specific points for each refrigeration circuit. Temperature thermistors provide continuous temperature input to the unit controller for proper cooling operation as well as system protection. Controller logic will de-energize compressors for each refrigeration circuit when evaporator coil temperature falls below 32°F (0°C) to prevent evaporator freeze-up.

Each thermistor must be specifically placed for proper unit operation and to initiate valid alarms. See TABLE 14 through TABLE 15 for proper locations.

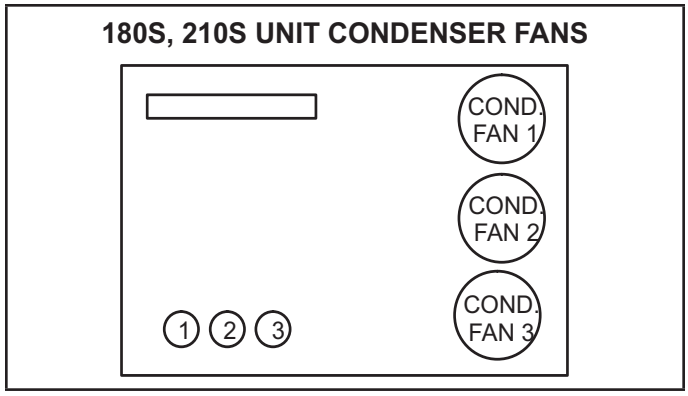

FIGURE 26

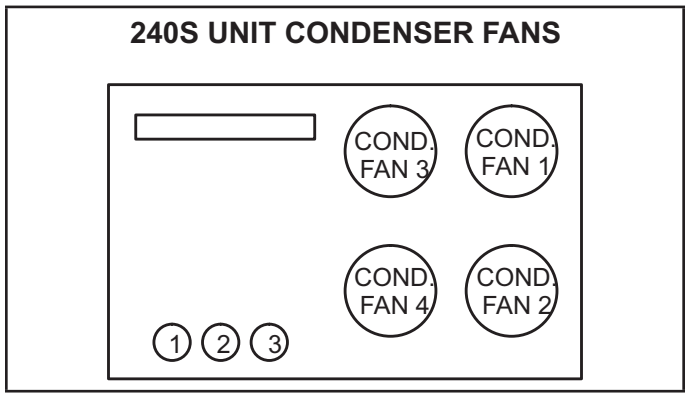

FIGURE 27

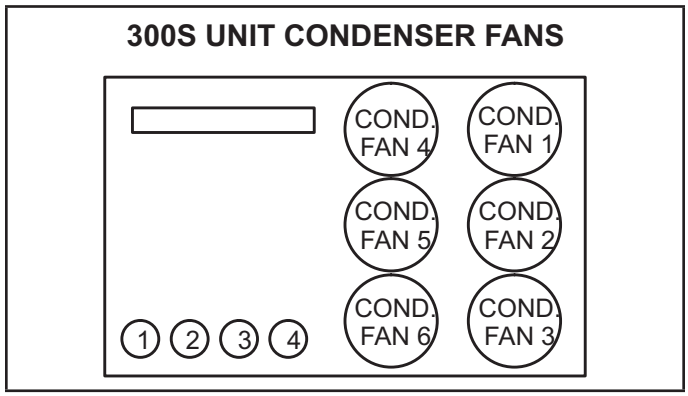

FIGURE 28

TABLE 14
LGX/LCX180, 210, 240

Cat. No.	Ass'y. No.	Sensor Yellow, Blue, Red	Figure
22J06	623049-01	RT46, 47, 50	FIGURE 29

TABLE 15
LGX/LCX300

Cat. No.	Ass'y. No.	Sensor Yel, Blu, Red, Grn	Figure
22J06	623049-01	RT46, 47, 50, 51	FIGURE 30

LGX/LCX180, 210, 240
NON-REHEAT EVAPORATOR / INDOOR COIL
RT46, 47, 50

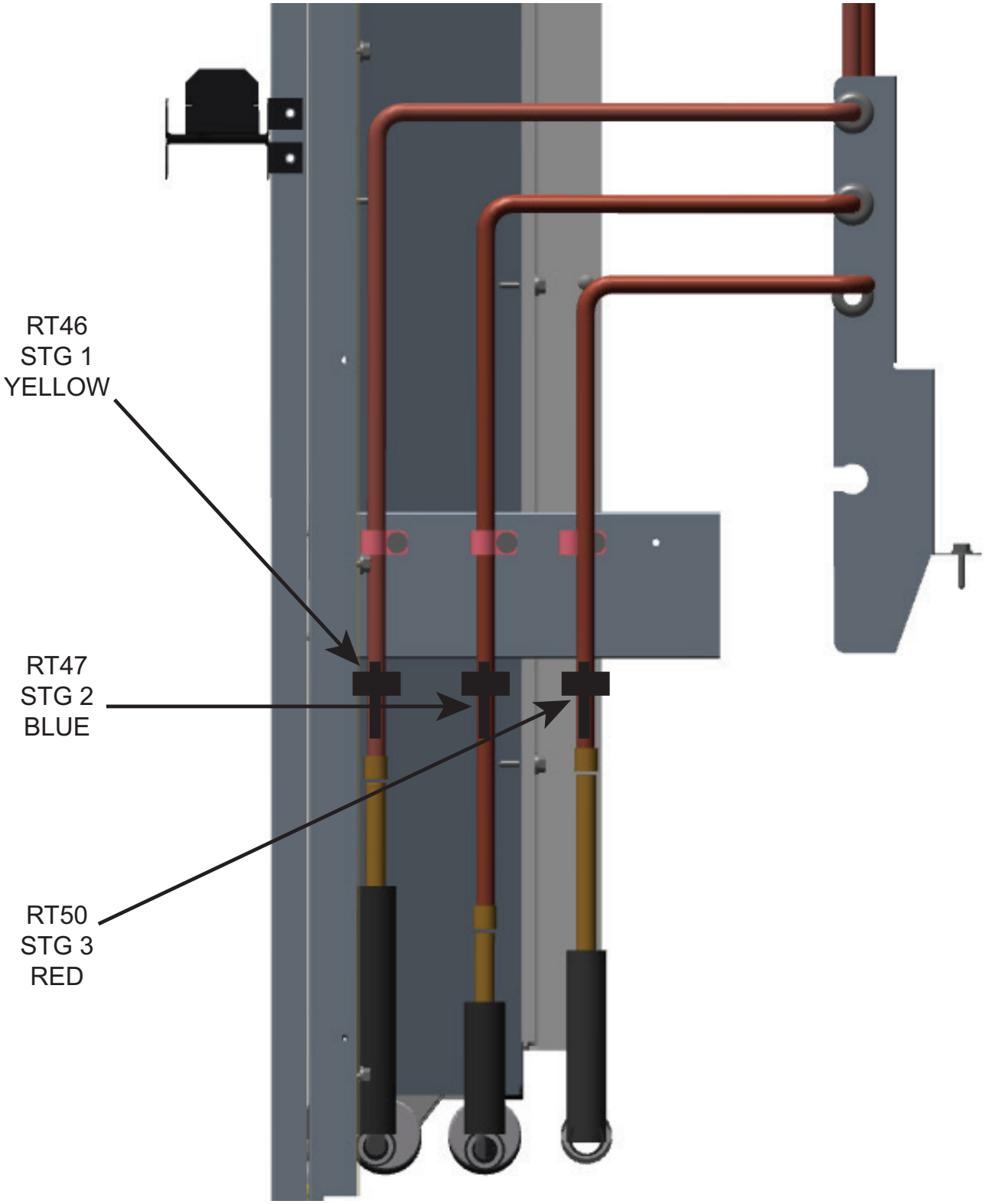

FIGURE 29

LGX/LCX300
NON-REHEAT EVAPORATOR / INDOOR COIL
RT46, 47, 50, 51

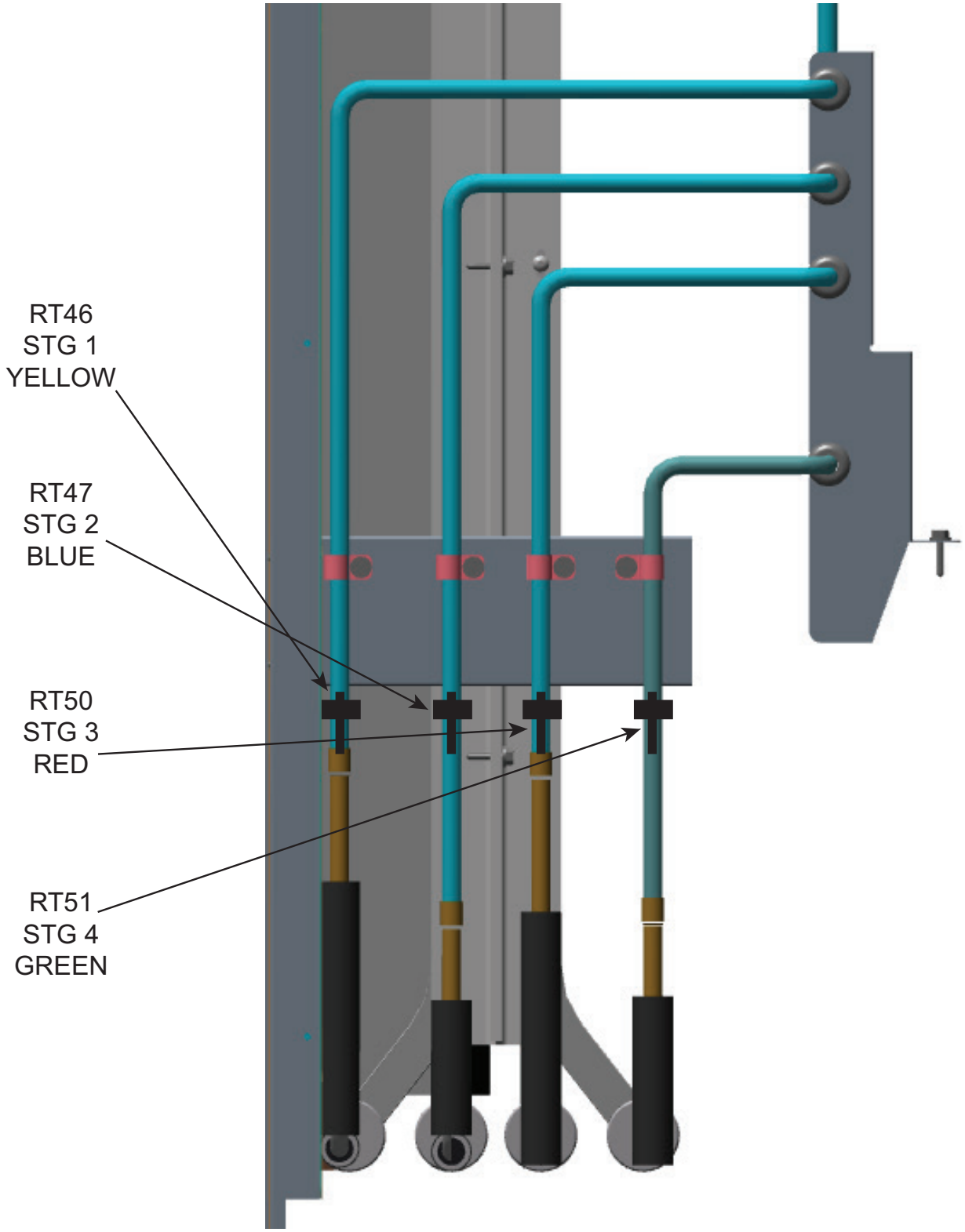

FIGURE 30

LGX180, 210, 240
REHEAT EVAPORATOR / INDOOR COIL
RT46, 47, 50

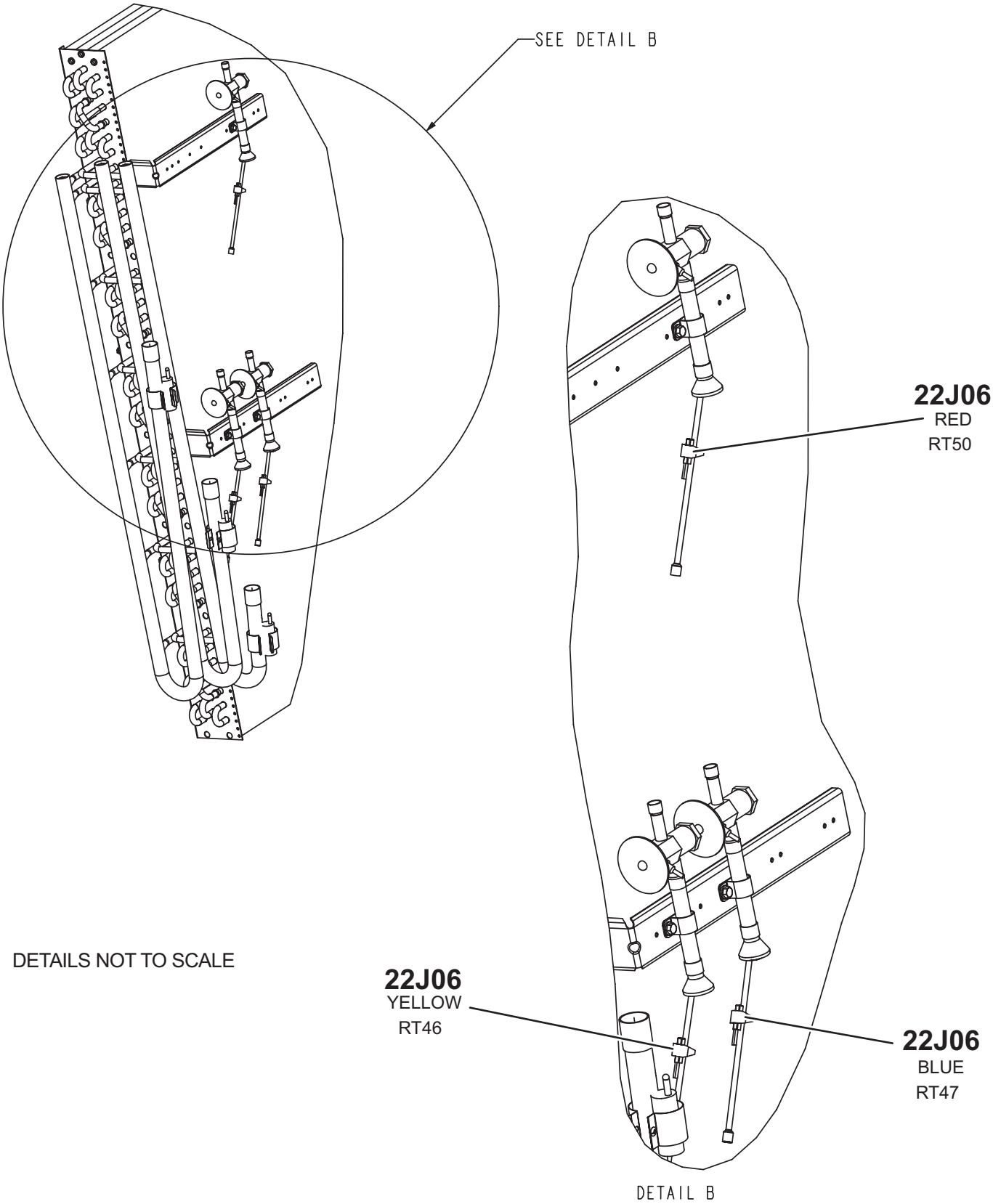

FIGURE 44

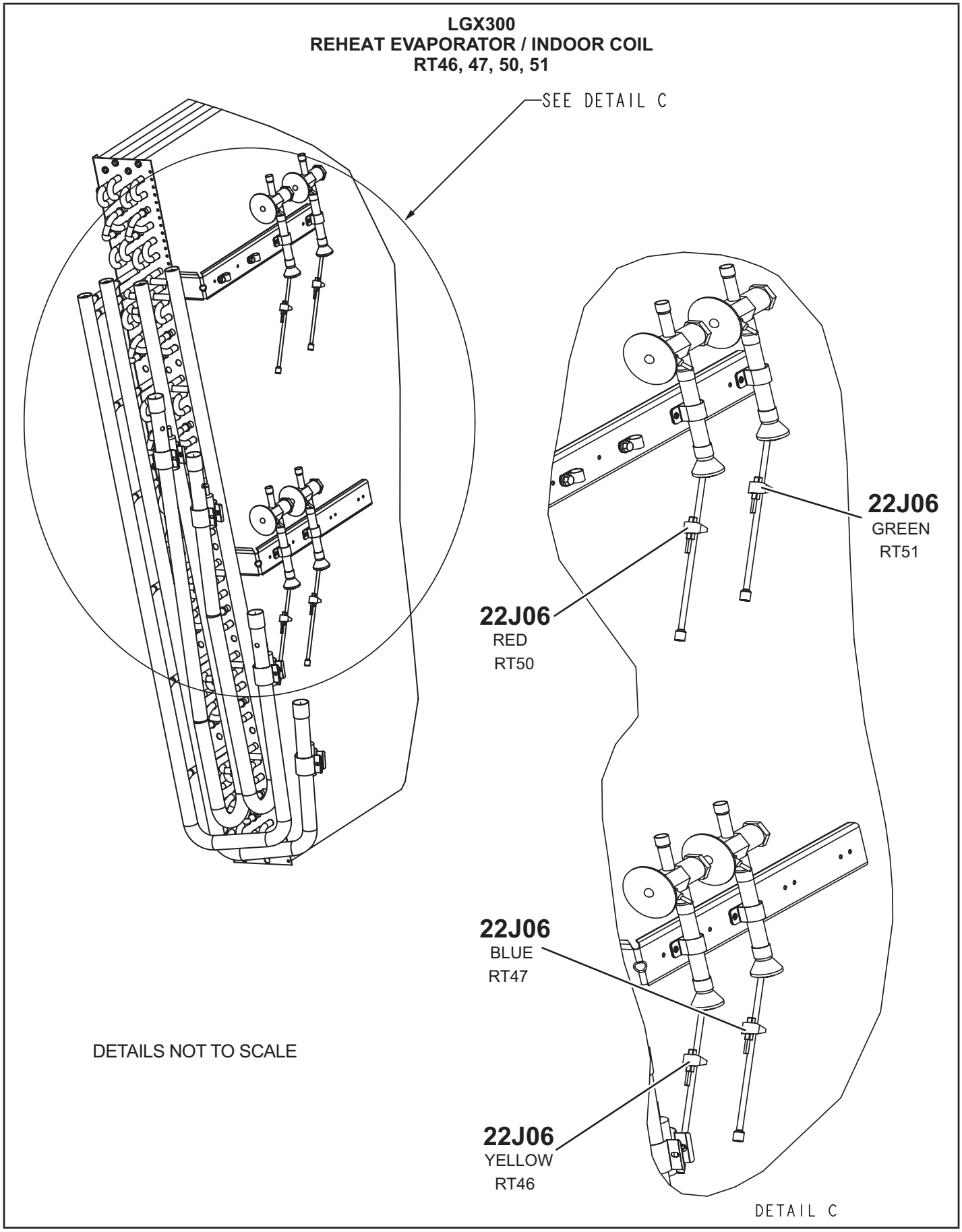
LGX300
REHEAT EVAPORATOR / INDOOR COIL
RT46, 47, 50, 51
SEE DETAIL C
22J06
GREEN
RT51
22J06
RED
RT50
22J06
BLUE
RT47
22J06
YELLOW
RT46
DETAILS NOT TO SCALE
DETAIL C

FIGURE 45

RDS Sensors

Units are equipped with factory-installed RDS Sensors located on different points on the unit. The RDS sensors provide the Unit Controller with continuous readings for leaked refrigerant concentration levels and sensor health status (Good or Fault). These readings are used to modify unit operation to disperse the leaked refrigerant and to remove possible ignition sources. In addition, the Unit Controller uses these readings to initiate alarms to alert the operator of a refrigerant leak or faulty sensor(s).

Each sensor must be specifically placed for proper unit operation and to initiate valid alarms. To identify sensor locations see TABLE 16.

TABLE 16

RDS Sensor Figures

Model	Qty.	Type	Figure
LGX/LCX 180-300	2 sensors	INDOOR SENSOR	FIGURE 31
		COMPRESSOR SENSOR	FIGURE 32

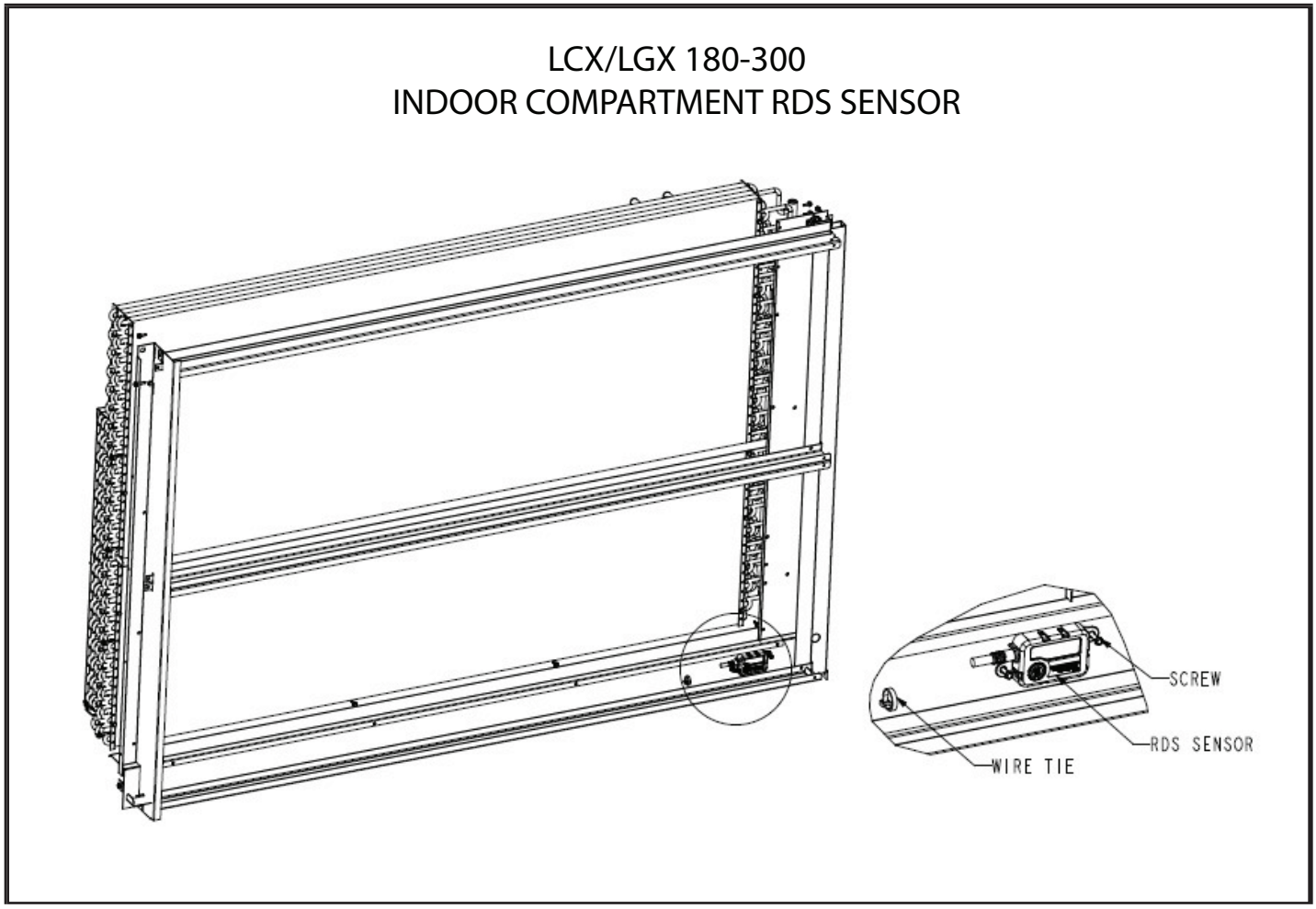

FIGURE 31

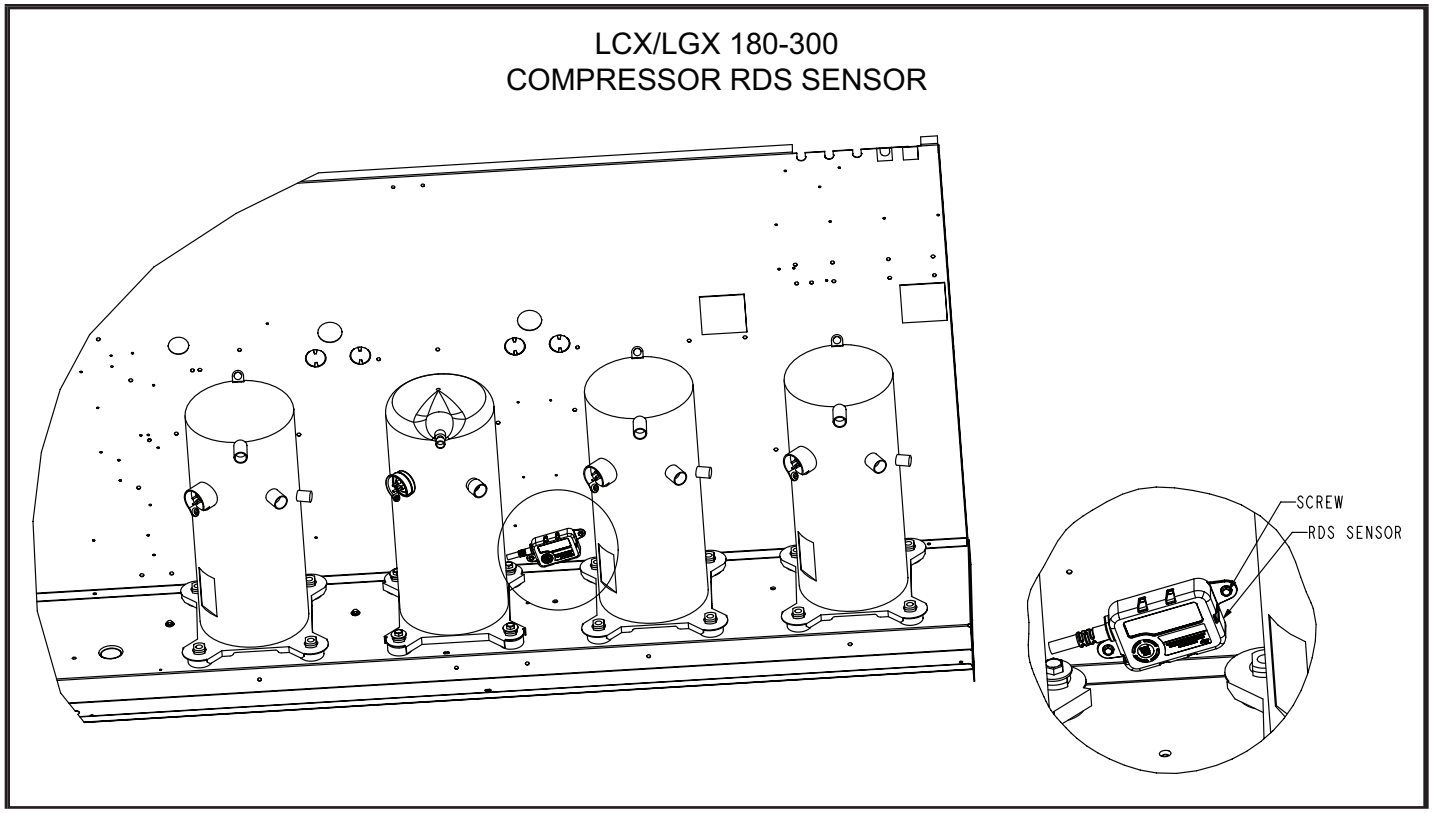

FIGURE 32

Gas Heat Start-Up (Gas Units)

FOR YOUR SAFETY READ BEFORE LIGHTING

BEFORE LIGHTING smell all around the appliance area for gas. Be sure to smell next to the floor because some gas is heavier than air and will settle on the floor.

Use only your hand to push in or turn the gas control knob. Never use tools. If the knob will not push in or turn by hand, do not try to repair it, call a qualified service technician. Force or attempted repair may result in a fire or explosion.

This unit is equipped with an automatic spark ignition system.

There is no pilot. In case of a safety shutdown, move thermostat switch to **OFF** and return the thermostat switch to **HEAT** to reset ignition control.

⚠ WARNING

Electric shock hazard. Can cause injury or death. Do not use this unit if any part has been under water. Immediately call a qualified service technician to inspect the unit and to replace any part of the control system and any gas control which has been under water.

⚠ WARNING

Danger of explosion. Can cause injury or product or property damage. If overheating occurs or if gas supply fails to shut off, shut off the manual gas valve to the appliance before shutting off electrical supply.

⚠ WARNING

Electric shock hazard. Can cause injury or death. Before attempting to perform any service or maintenance, turn the electrical power to unit OFF at disconnect switch(es). Unit may have multiple power supplies.

⚠ WARNING

SMOKE POTENTIAL

The heat exchanger in this unit could be a source of smoke on initial firing. Take precautions with respect to building occupants and property. Vent initial supply air outside when possible.

⚠ WARNING

Danger of explosion. Can cause injury or death. Do not attempt to light manually. Unit has a direct spark ignition system.

A-Placing Unit in Operation

⚠ WARNING

Danger of explosion and fire. Can cause injury or product or property damage. You must follow these instructions exactly.

Gas Valve Operation for Honeywell VR8205Q / VR8305Q and White Rodgers 36H54 (FIGURE 33)

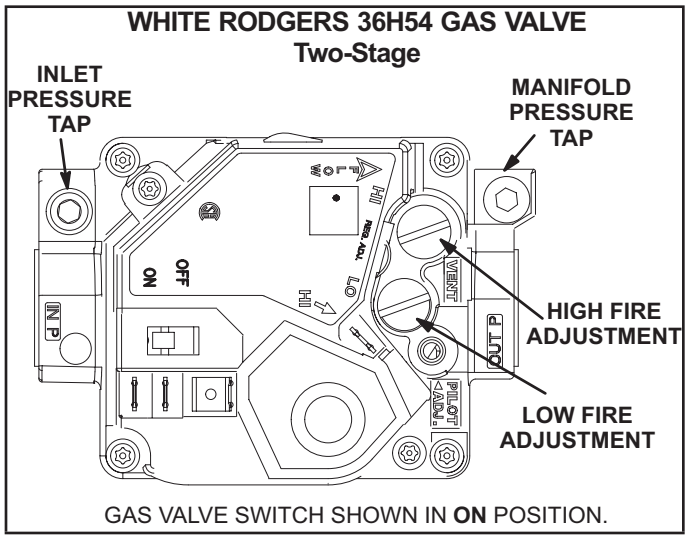

FIGURE 33

1 - Set thermostat to lowest setting.

2 - Turn off all electrical power to appliance.

3 - This appliance is equipped with an ignition device which automatically lights the burner. Do **not** try to light the burner by hand.

4 - Open or remove the heat section access panel.

5 - Turn gas valve switch to **OFF**. See FIGURE 33.

6 - Wait five (5) minutes to clear out any gas. If you then smell gas, **STOP!** Immediately call your gas supplier from a neighbor's phone. Follow the gas supplier's instructions. If you do not smell gas, go to the next step.

7 - Turn gas valve switch to **ON**. See FIGURE 33.

8 - Close or replace the heat section access panel.

9 - Turn on all electrical power to appliance.

10 - Set thermostat to desired setting.

11 - The ignition sequence will start.

12 - If the appliance does not light the first time (gas line not fully purged), it will attempt up to two more ignitions before locking out.

13 - If lockout occurs, repeat steps 1 through 10.

14 - If the appliance will not operate, follow the instructions "Turning Off Gas to Unit" and call your service technician or gas supplier.

Turning Off Gas to Unit

1 - If using an electromechanical thermostat, set to the lowest setting.

2 - Before performing any service, turn off all electrical power to the appliance.

3 - Open or remove the heat section access panel.

4 - Turn gas valve switch to **OFF**.

5 - Close or replace the heat section access panel.

⚠ WARNING

Danger of explosion. Can cause injury or death. Do not attempt to light manually. Unit has a direct spark ignition system.

Heating Operation and Adjustments

(Gas Units)

A-Heating Sequence of Operation

1 - On a heating demand the combustion air inducer starts immediately.

2 - Combustion air pressure switch proves inducer operation. After a 30-second pre-purge, power is allowed to ignition control. Switch is factory set and requires no adjustment.

3 - Spark ignitor energizes and gas valve solenoid opens.

4 - Spark ignites gas, ignition sensor proves the flame and combustion continues.

5 - If flame is not detected after first ignition trial, ignition control will repeat steps 3 and 4 two more times before locking out the gas valve.

6 - For troubleshooting purposes, an ignition attempt after lock out may be re-established manually. Move thermostat to **OFF** and return thermostat switch to **HEAT** position.

B-Limit Controls

Limit controls are factory-set and are not adjustable. Two limits are located on the drip shield in the blower compartment. See FIGURE 34.

C-Heating Adjustment

Main burners are factory-set and do not require adjustment. The following manifold pressures are listed on the gas valve.

Natural Gas Units - Low Fire - 1.6" w.c. (not adjustable)
Natural Gas Units - High Fire - 3.7" w.c.
LP Gas Units - Low Fire - 5.5" w.c. (not adjustable)
LP Gas Units - High Fire - 10.5" w.c.

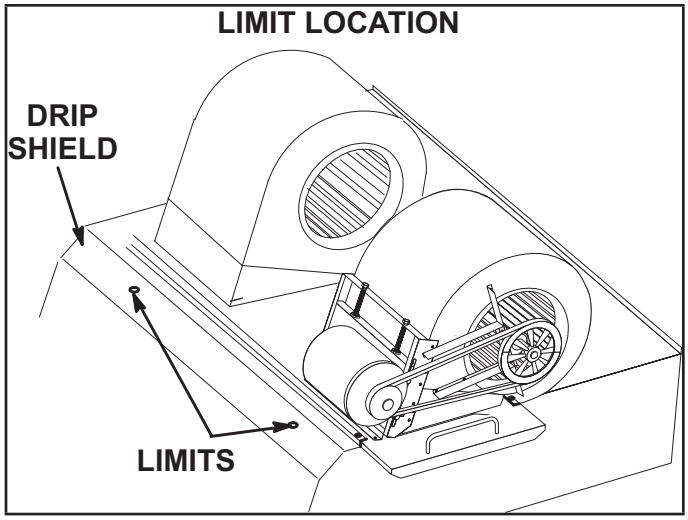

FIGURE 34

Electric Heat Start-Up (LCX Units)

Field-Installed Option

Electric heat will stage on and cycle with thermostat demand. Number of stages of electric heat will vary depending on electric heat assembly. See electric heat wiring diagram on unit for sequence of operation.

Multi-Stage Air Volume Start-Up

The blower rotation will always be correct on units equipped with an inverter. Checking blower rotation is not a valid method of determining voltage phasing for incoming power.

Units Equipped With Optional Voltage or Phase Detection - The Unit Controller checks the incoming power during start-up. If the voltage or phase is incorrect, the Unit Controller will display an alarm and the unit will not start.

A-Design Specifications

Use TABLE 17 to fill in field-provided, design specified blower CFM for appropriate unit.

B-Set Maximum CFM

Use TABLE 17 to determine highest blower CFM for appropriate unit. Adjust the blower pulley to deliver that amount of CFM with only the blower operating. See Determining Unit CFM in the Blower Operation and Adjustment section.

C-Set Blower Speeds

1 - Use the following mobile service app menu to enter the blower design specified CFM into the Unit Controller. Make sure blower CFM is within limitations shown in TABLE 18 or TABLE 19.

RTU MENU > RTU OPTIONS > BLOWER > SPEED

2 - Enter the following design specifications as shown in TABLE 4.

- Blower / Heat CFM
- Cooling High CFM
- Cooling Low CFM
- Vent CFM

D-CFM Verification / Adjustment

The design CFM entered into the app for each blower speed should be verified, except for highest blower CFM. All adjustments will be made using ONLY the app.

1 - Run the each design CFM (blower speed) using the app.

2 - Measure Blower RPM and Static Pressure, then calculate the actual CFM per process in Section “Blower Operation and Adjustments”.

3 - Adjust app entered design CFM (higher/lower) for this blower speed.

4 - Repeat steps 1-3 until actual CFM aligns with design CFM from Table 4.

E-Set Damper Minimum Position

To maintain required minimum ventilation air volumes when the unit is in the occupied mode, two minimum damper positions must be set.

The Unit Controller will open the damper to “Min OCP Blwr High” when blower CFM is at or ABOVE the “midpoint” CFM.

The Unit Controller will open the dampers to “Min OCP Blwr Low” when blower CFM is BELOW a “midpoint” CFM.

The Unit Controller will calculate the “midpoint” CFM.

TABLE 17
Blower CFM Design Specifications

Unit	T’Stat or Zone Control Stages	Blower Speed	Design Specified CFM
180	2	Htg.	
		Clg. High	
		Clg. Low	
		Ventilation	
210	2	Htg.	
		Clg. High	
		Clg. Low	
		Ventilation	
240	2	Htg.	
		Clg. High	
		Clg. Low	
		Ventilation	
300	2	Htg.	
		Clg. High	
		Clg. Low	
		Ventilation	

*Available blower speed vary by unit and thermostat stages.

Set Minimum Position 1

Use the following mobile service app menu to set “Min OCP Blwr High” for the blower CFM above the “midpoint” CFM. When navigating into this menu, the Unit Controller will run damper calibration and allow damper position adjustment.

RTU MENU > SETTINGS > RTU OPTIONS > DAMPER

Tap “Next” to skip tabs and complete damper position calibration until “Damper Calibration Blower Speed High” tab appears.

Measure the intake air CFM. If the CFM is lower than the design specified CFM for ventilation air, use the Unit Controller to increase the damper percent open. If the CFM is higher than specified, decrease the damper percent open.

NOTE - *Intake air CFM can also be determined using the outdoor air temperature, return air temperature and mixed air temperature. Refer to the economizer or outdoor air damper installation instructions.*

TABLE 18
HEATING, VENTILATION, & SMOKE MINIMUM AND MAXIMUM CFM

Unit				Heating CFM			Vent CFM			Smoke CFM		
Tons	Model	Speed	Heat Code	Default	Min.	Max.	Default	Min.	Max.	Default	Min.	Max.
15	LGX180	Std	S	6000	4325	7200	6000	2250	7200	6000	2250	7200
		Med	M		4500							
		High	H		5125							
	LCX180	15, 30, 45, 60kW	N, E, J, K, L		5200							
17.5	LGX210	Std, Med	S, M	7000	4500	8400	7000	2625	8400	7000	2625	8400
		High	H		5125							
	LCX210	15, 30, 45, 60kW	N, E, J, K, L		5200							
		90kW	P		6000							
20	LGX240	Std, Med	S, M	8000	4500	9600	8000	3000	9600	8000	3000	9600
		High	H		5125							
	LCX240	15, 30, 45, 60kW	N, E, J, K, L		5200							
		90kW	P		6000							
25	LGX300	Std, Med	S, M	10000	4500	12000	10000	3750	12000	10000	3750	12000
		High	H		5125							
	LCX300	15, 30, 45, 60kW	N, E, J, K, L		5200							
		90kW	P		6000							

*Use highest value between Heating and Cooling High CFM Max.

TABLE 19
COOLING MINIMUM AND MAXIMUM CFM

LGX/ LCX Unit	Cooling Low CFM			Cooling High CFM		
	Default	Min.	Max.	Default	Min.	Max.
180	3900	2000	7200	5400	5000	7200
210	4550	2500	8400	6300	6000	8400
240	5200	3000	9600	7200	6250	9600
300	6500	3500	12000	9000	7000	12000

*Use Cooling High CFM Max

Set Minimum Position 2

Use the following mobile service app menu in the Unit Controller to set “Min OCP Blwr Low” for the blower CFM below the “midpoint” CFM. When navigating into this menu, the Unit Controller will run damper calibration and allow damper position adjustment.

RTU MENU > SETTINGS > RTU OPTIONS > DAMPER

Tap “Next” to skip tabs and complete damper position calibration until “Damper Calibration Blower Speed High” tab appears.

Measure the intake air CFM. If the CFM is lower than the design specified CFM for ventilation air, use the Unit Controller to increase the damper percent open. If the CFM is higher than specified, decrease the damper percent open.

NOTE - *Intake air CFM can also be determined using the outdoor air temperature, return air temperature and mixed air temperature. Refer to the economizer or outdoor air damper installation instructions.*

180/210/240/300 MODELS (3 AND 4 COMPRESSORS)

UNIT OPERATION WITH 2-STAGE THERMOSTAT (2 COOLING STAGES, Y1, Y2)

SUPPLY AIR BLOWER SPEED

Unit has following supply air blower speed setting:

- Ventilation speed
- Cooling Speed - Low
- Cooling Speed - High
- Heating Speed
- Smoke Speed (Using only in smoke removal option - not discussed)

[1] Unit Features and Economizer and Outdoor Air is Suitable

Y1 Demand:

All compressors are off, supply air blower is on low cooling speed to minimize blower power consumption, economizer modulates (minimum to maximum open position) to maintain 55°F supply air temperature (default unit controller setting).

Y2 Demand:

All compressors are off, supply air blower is on high cooling speed providing higher cooling capacity, and economizer modulates to maintain 55°F supply air temperature. If economizer stays at maximum open for 3 minutes, 1st stage compressors (compressor 1 and 2) are energized while supply air blower stays on high cooling speed providing maximum cooling capacity.

[1] Outdoor air suitability is determined by the energy state of outdoor ambient (enthalpy or sensible) and its ability to achieve the desired free cooling effects. Outdoor air suitability can also be determined by a third party controller and provided to the rooftop unit via a network connection.

Unit Does Not Feature An Economizer Or Outdoor Air Is Not Suitable

Y1 Demand:

1st stage compressors 1 & 2 operate and supply air blower operates at low cooling speed.

Y2 Demand:

All compressors operate and supply air blower operates at high cooling speed.

180/210/240/300 MODELS (3 AND 4 COMPRESSORS)

ZONE SENSOR

SUPPLY AIR BLOWER SPEED

Unit has following supply air blower speed setting:

- Ventilation speed
- Cooling Speed - Low
- Cooling Speed - High
- Heating Speed
- Smoke Speed (Using only in smoke removal option - not discussed)

[1] Unit Features and Economizer and Outdoor Air is Suitable

3 Compressor Units

Y1 Demand:

All compressors are off, supply air blower is on low cooling speed to minimize blower power consumption, economizer modulates (minimum to maximum open position) to maintain 55°F supply air temperature (default unit controller setting).

Y2 Demand:

All compressors are off, supply air blower is on high cooling speed providing higher cooling capacity, economizer modulates (minimum to maximum open position) to maintain 55°F supply air temperature (default unit controller setting).

If economizer stays at maximum open for 3 minutes then compressor 1 is energized while supply air blower stays on high cooling speed. After compressor is energized the economizer stays at maximum open.

Y3 Demand:

Compressors 1 and 2 are energized while supply air blower stays on high cooling speed. After compressors are energized the economizer stays at maximum.

Y4 Demand:

All compressors are energized and supply air blower stays on high cooling speed.

4 Compressor Units

Y1 Demand:

All compressors are off, supply air blower is on low cooling speed to minimize blower power consumption, economizer modulates (minimum to maximum open position) to maintain 55°F supply air temperature (default unit controller setting).

Y2 Demand:

All compressors are off, supply air blower is on high cooling speed providing higher cooling capacity, economizer modulates (minimum to maximum open position) to maintain 55°F supply air temperature (default unit controller setting).

If economizer stays at maximum open for 3 minutes then compressors 1 and 2 are energized while supply air blower stays on high cooling speed. After compressors are energized the economizer stays at maximum open.

Y3 Demand:

Compressors 1, 2 and 3 are energized and supply air blower stays on high cooling speed.

Y4 Demand:

All compressors are energized and supply air blower stays on high cooling speed.

[1] Outdoor air suitability is determined by the energy state of outdoor ambient (enthalpy or sensible) and its ability to achieve the desired free cooling effects. Outdoor air suitability can also be determined by a third party controller and provided to the rooftop unit via a network connection.

180/210/240/300 MODELS (3 AND 4 COMPRESSORS) (CONTINUED)

ZONE SENSOR

Unit Does Not Feature An Economizer Or Outdoor Air Is Not Suitable

3 Compressor Units

Y1 Demand:

Compressor 1 operates and supply air blower operates at low cooling speed.

Y2 Demand:

Compressors 1 and 2 operate and supply air blower operates at low cooling speed.

Y3 Demand:

Compressors 1, 2, and 3 operate and supply air blower operates at high cooling speed .

4 Compressor Units

Y1 Demand:

Compressor 1 operates and supply air blower operates at low cooling speed.

Y2 Demand:

Compressors 1 and 2 operate and supply air blower operates at low cooling speed.

Y3 Demand:

Compressors 1, 2, and 3 operate and supply air blower operates at high cooling speed.

Y4 Demand:

All compressors operate and supply air blower operates at high cooling speed.

Hot Gas Reheat Start-Up and Operation

General

Hot gas reheat units provide a dehumidifying mode of operation. These units contain a reheat coil adjacent to and downstream of the evaporator coil. Reheat coil solenoid valves, L14 and L30, route hot discharge gas from the compressor to the reheat coil. Return air pulled across the evaporator coil is cooled and dehumidified; the reheat coil adds heat to supply air.

See FIGURE 35 for 180S, 210S, and 240S normal cooling and reheat refrigerant routing and FIGURE 36 for 300S normal cooling and reheat refrigerant routing.

L14 and L30 Reheat Coil Solenoid Valves

When room conditions close the dehumidistat switch, L14 and L30 reheat valves are energized and refrigerant is routed to the reheat coil.

Check-Out

Test hot gas reheat operation using the following procedure.

1 - Make sure reheat is wired as shown in wiring section.

2 - Initiate a dehumidification demand by adjusting dehumidistat setpoint knob BELOW indoor relative humidity. The blower , compressor 1 and compressor 2 should be operating.

3 - End a dehumidification demand by adjusting setpoint knob ABOVE indoor relative humidity. The blower, compressor 1, and compressor 2 should de-energize.

NOTE - *When a reheat demand is present, the blower will operate on high speed.*

Default Reheat Operation

Reheat will operate as shown in TABLE 20 once three conditions are met:

1 - Blower must be operating.

2 - System must be in occupied mode.

3 - System must NOT be operating in heating mode.

IMPORTANT - Free cooling does not operate during reheat.

TABLE 20
REHEAT OPERATION

Two-Stage Thermostat		
T'stat and Humidity Demands	Operation	
	180S, 210S, 240S (3-Compressors)	300S (4-Compressors)
Reheat Only	Compressor 1 & 2 Reheat	Compressor 1 & 2 Reheat
Reheat & Y1	Compressor 1 & 2 Reheat and Compressor 3 Cooling[1]	Compressor 1 & 2 Reheat and Compressor 3 & 4 Cooling[1]
Reheat & Y1 & Y2	Compressor 1, 2, & 3 Cooling[2]	Compressor 1, 2, 3 & 4 Cooling[2]

*Cooling stage is initiated when zone temperature is higher than the cooling setpoint plus the appropriate stage differential.

**Reheat demand is initiated when relative humidity is higher than relative humidity setpoint.

[1]If there is no reheat demand and outdoor air is suitable, free cooling will operate.

[2]If there is no reheat demand and outdoor air is suitable, free cooling and compressor 1 and 2 will operate.

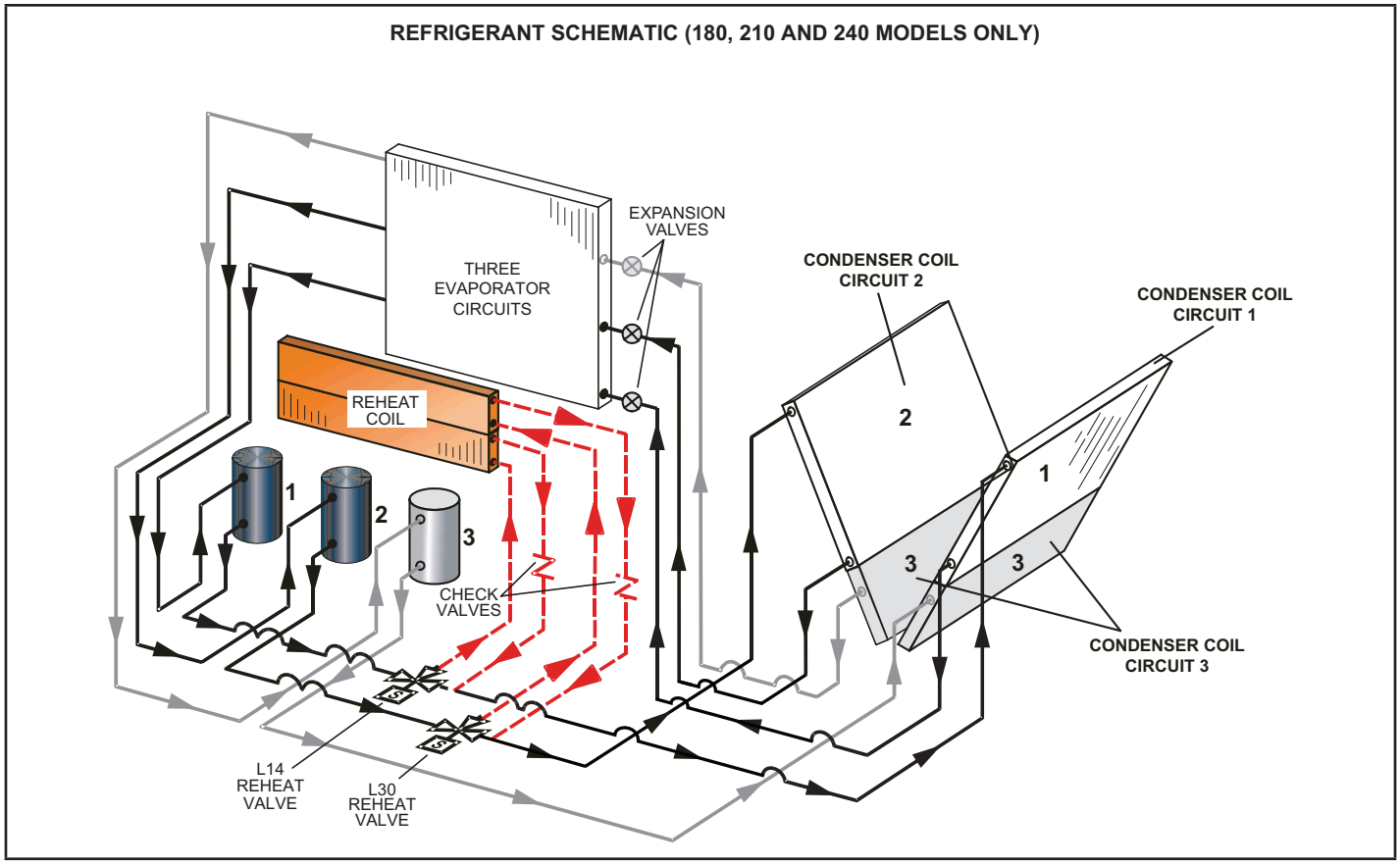

FIGURE 35

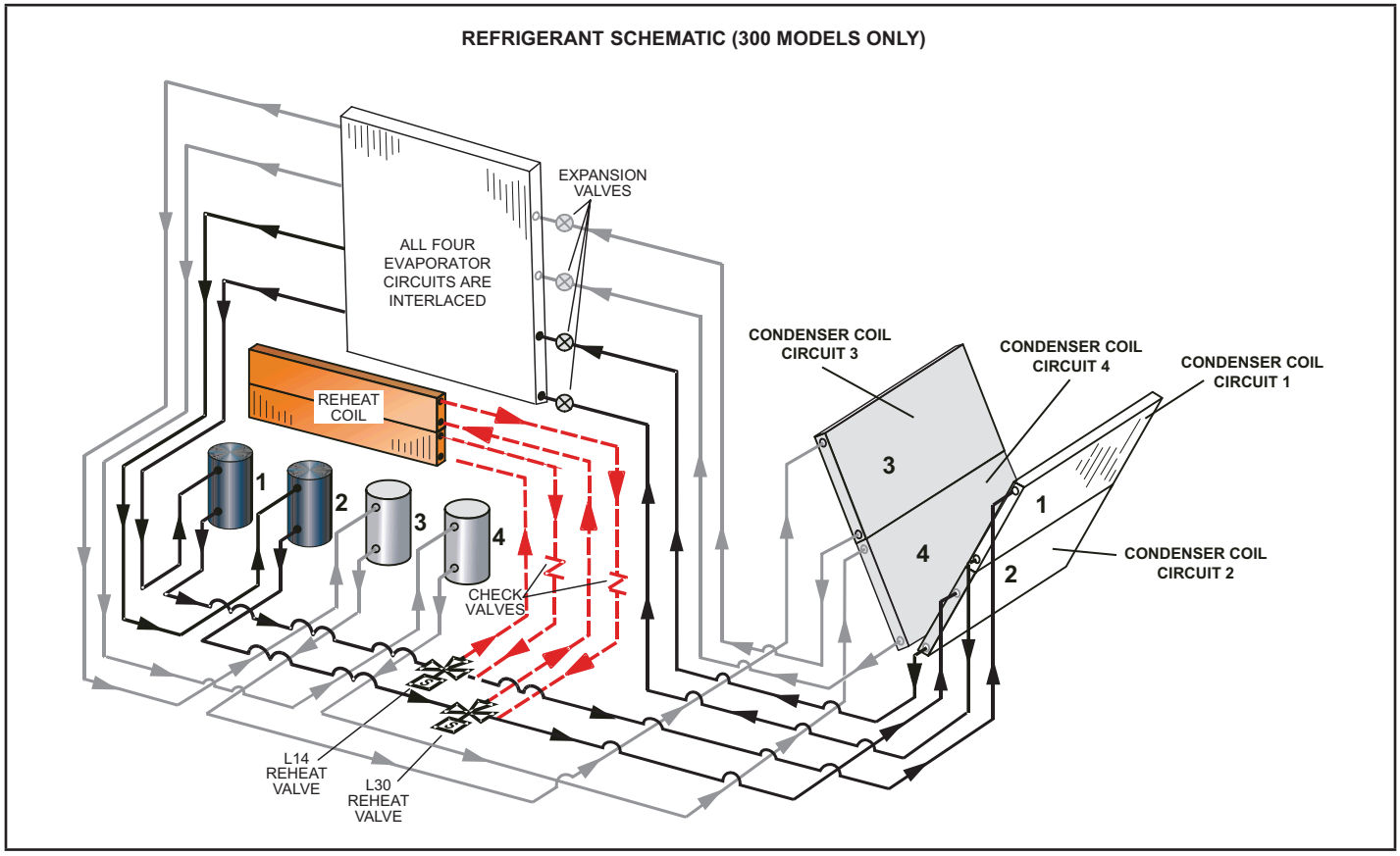

FIGURE 36

Preventative Maintenance / Repair

IMPORTANT MAINTENANCE / REPAIR SAFETY INSTRUCTIONS

Prior to beginning work on systems containing FLAMMABLE REFRIGERANTS, safety checks are necessary to ensure that the risk of ignition is minimized.

Work shall be undertaken under a controlled procedure to minimize the risk of a flammable gas or vapor being present while the work is being performed.

All maintenance staff and others working in the local area shall be instructed on the nature of work being carried out. Work in confined spaces shall be avoided.

The area shall be checked with an appropriate refrigerant detector prior to and during work, to ensure the technician is aware of potentially toxic or flammable atmospheres. Ensure that the leak detection equipment being used is suitable for use with all applicable refrigerants, i.e. non-sparking, adequately sealed or intrinsically safe.

If any hot work is to be conducted on the refrigerating equipment or any associated parts, appropriate fire extinguishing equipment shall be available to hand. Have a dry powder or CO2 fire extinguisher adjacent to the charging area.

No person carrying out work in relation to a REFRIGERATING SYSTEM which involves exposing any pipe work shall use any sources of ignition in such a manner that it may lead to the risk of fire or explosion. All possible ignition sources, including cigarette smoking, should be kept sufficiently far away from the site of installation, repairing, removing and disposal, during which refrigerant can possibly be released to the surrounding space. Prior to work taking place, the area around the equipment is to be surveyed to make sure that there are no flammable hazards or ignition risks. “No Smoking” signs shall be displayed.

Where electrical components are being changed, they shall be fit for the purpose and to the correct specification. At all times, the manufacturer’s maintenance and service guidelines shall be followed. If in doubt, consult the manufacturer’s technical department for assistance.

Repair and maintenance to electrical components shall include initial safety checks and component inspection procedures. If a fault exists that could compromise safety, then no electrical supply shall be connected to the circuit until it is satisfactorily dealt with. If the fault cannot be corrected immediately but it is necessary to continue operation, an adequate temporary solution shall be used. This shall be reported to the owner of the equipment so all parties are advised.

Initial safety checks shall include:

– that capacitors are discharged: this shall be done in a safe manner to avoid possibility of sparking

– that no live electrical components and wiring are exposed while charging, recovering or purging the system

– that there is continuity of earth bonding

The following checks shall be applied to installations using FLAMMABLE REFRIGERANTS:

– the actual REFRIGERANT CHARGE is in accordance with the room size within which the refrigerant containing parts are installed;

– the ventilation machinery and outlets are operating adequately and are not obstructed;

– if an indirect refrigerating circuit is being used, the secondary circuit shall be checked for the presence of refrigerant;

– marking to the equipment continues to be visible and legible. Markings and signs that are illegible shall be corrected;

– refrigerating pipe or components are installed in a position where they are unlikely to be exposed to any substance which may corrode refrigerant containing components, unless the components are constructed of materials which are inherently resistant to being corroded or are suitably protected against being so corroded.

During repairs to sealed electrical components, the components shall be replaced. Replacement parts shall be in accordance with the manufacturer’s specifications.

During repairs to intrinsically safe components, the components must be replaced. Replace components only with parts specified by the manufacturer. Other parts may result in the ignition of refrigerant in the atmosphere from a leak.

The unit should be inspected once a year by a qualified service technician.

A-Filters

Units are equipped with six 24 X 24 X 2” filters. Filters should be checked monthly and replaced when necessary with filters of like kind and size. Take note of air flow direction marking on filter frame when reinstalling filters. See FIGURE 37.

NOTE - *Filters must be U.L.C. certified or equivalent for use in Canada.*

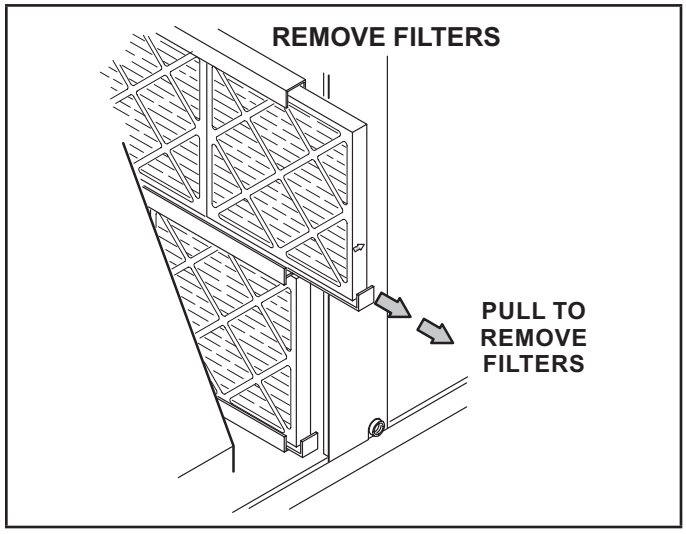

FIGURE 37

⚠ CAUTION

Label all wires prior to disconnection when servicing controls. Wiring errors can cause improper and dangerous operation. Verify proper operation after servicing.

B-Lubrication

All motors are lubricated at the factory. No further lubrication is required.

Blower shaft bearings are prelubricated. For extended bearing life, relubricate at least once every two years with a lithium base grease, such as Alvania 3 (Shell Oil), Chevron BRB2 (Standard Oil) or Regal AFB2 (Texas Oil). Use a hand grease gun for relubrication. Add only enough grease to purge through the bearings so that a bead of grease appears at the seal lip contacts.

C-Burners (Gas Units)

Periodically examine burner flames for proper appearance during the heating season. Before each heating season examine the burners for any deposits or blockage which may have occurred.

Clean burners as follows:

1 - Turn off both electrical power and gas supply to unit.

2 - Open burner compartment access panel.

3 - Remove screws securing burner assembly to burner support and remove assembly. See FIGURE 38. Clean as necessary.

4 - Locate the ignitor under the left burners. Check ignitor spark gap with appropriately sized twist drills or feeler gauges. See FIGURE 39.

5 - Check the alignment of the ignitor and the sensor as shown in FIGURE 40 and TABLE 21.

6 - Replace burners and screws securing burner.

7 - Replace access panel.

8 - Restore electrical power and gas supply. Follow lighting instructions attached to unit and use inspection port in access panel to check flame.

⚠ WARNING

Danger of explosion. Can cause injury or death. Do not overtighten main burner mounting screws. Snug tighten only.

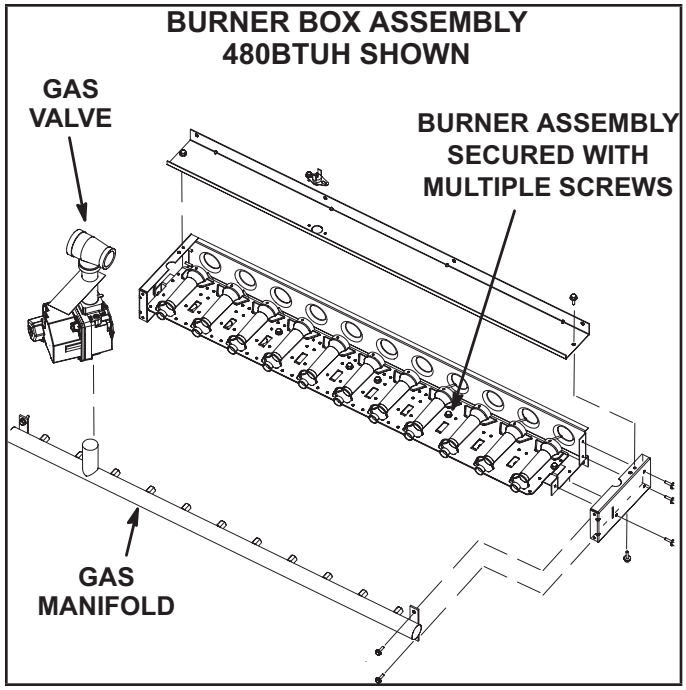

FIGURE 38

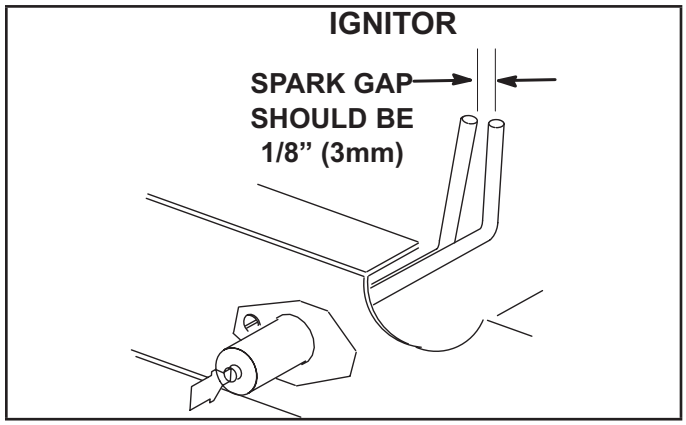

FIGURE 39

TABLE 21

Dimension	Unit Btuh Input	Length - in. (mm)	
		Ignitor	Sensor
A	260K	7-3/4 (197)	11 (279)
B	360K	5 (127)	5-1/2 (140)
C	480K	2-1/4 (57)	2-3/4 (70)

D-Combustion Air Inducer (Gas Units)

A combustion air proving switch checks combustion air inducer operation before allowing power to the gas controller. Gas controller will not operate if inducer is obstructed.

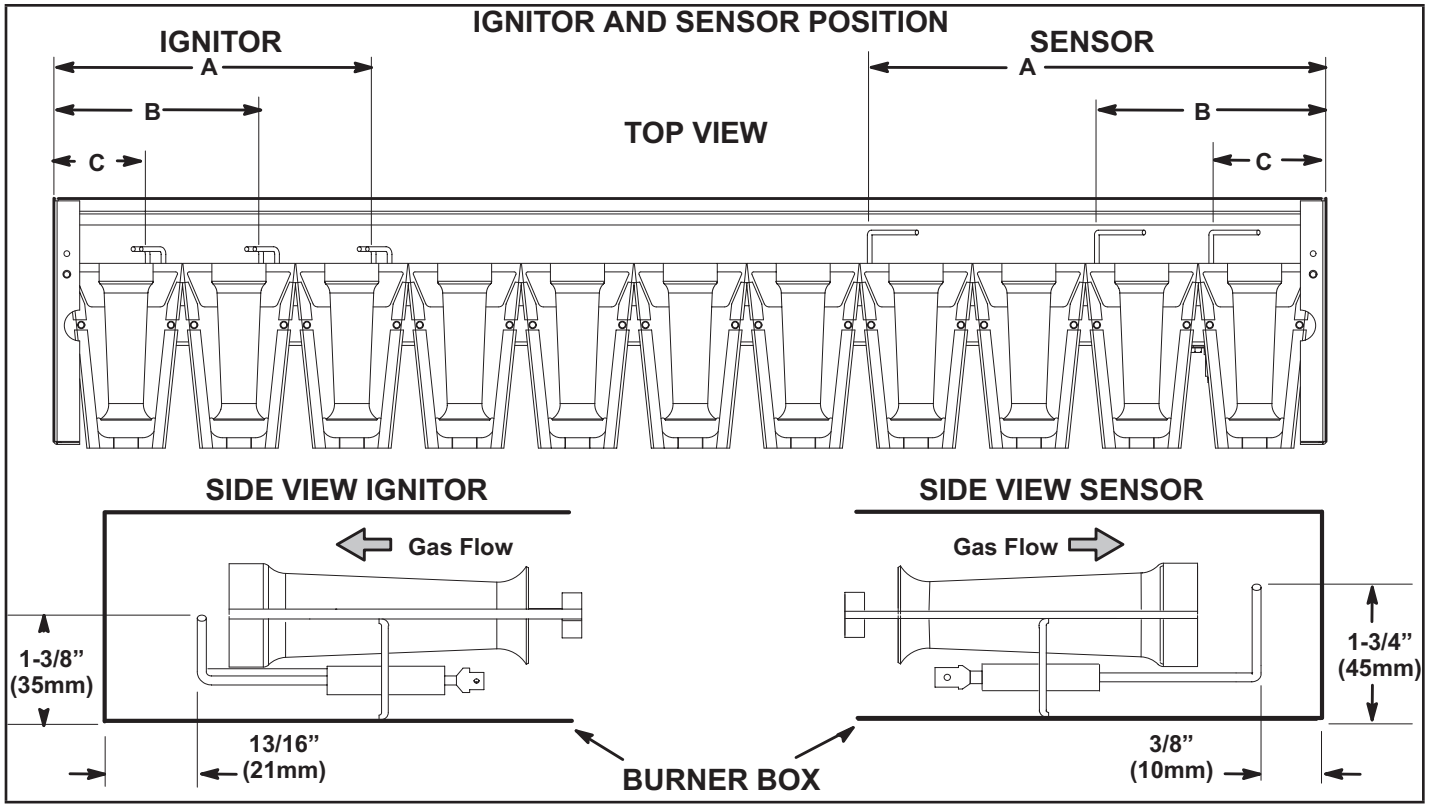

FIGURE 40

Under normal operating conditions, the combustion air inducer wheel should be checked and cleaned prior to the heating season. However, it should be examined periodically during the heating season to establish an ideal cleaning schedule. With power supply disconnected, the condition of the inducer wheel can be determined by looking through the vent opening.

Clean combustion air inducer as follows:

1 - Shut off power supply and gas to unit.

2 - Disconnect pressure switch air tubing from combustion air inducer port.

3 - Remove and retain screws securing combustion air inducer to flue box. Remove and retain two screws from bracket supporting vent connector. See FIGURE 41.

4 - Clean inducer wheel blades with a small brush and wipe off any dust from housing. Clean accumulated dust from front of flue box cover.

5 - Return combustion air inducer motor and vent connector to original location and secure with retained screws. It is recommended that the combustion air inducer gasket be replaced during reassembly.

6 - Clean combustion air inlet louvers on heat access panel using a small brush.

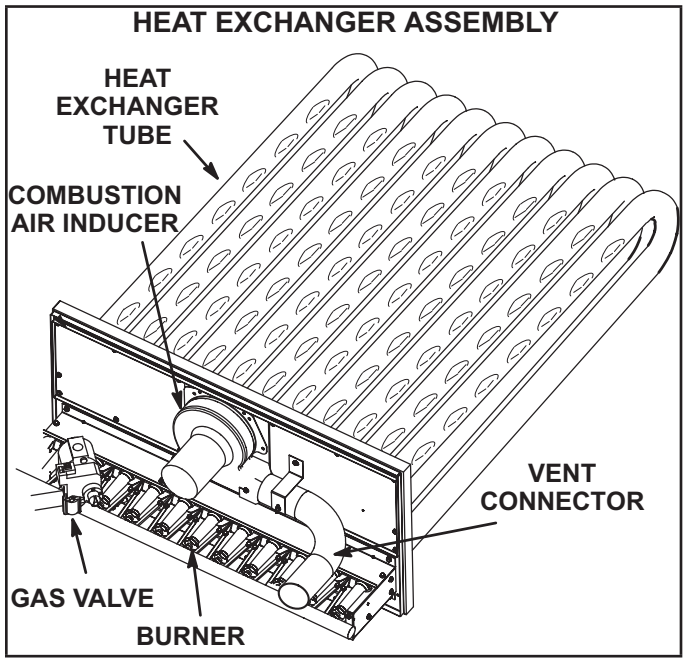

FIGURE 41

E-Flue Passageway and Flue Box (Gas Units)

1 - Remove combustion air inducer assembly as described in section D.

2 - Remove flue box cover. Clean with a wire brush as required.

3 - Clean tubes with a wire brush.

4 - Reassemble the unit. The flue box cover gasket and combustion air inducer gasket should also be replaced during reassembly.

F-Evaporator Coil

Inspect and clean coil at beginning of each cooling season. Clean using mild detergent or commercial coil cleaner. Flush coil and condensate drain with water taking care not to get insulation, filters and return air ducts wet.

G-Supply Air Blower Wheel

Annually inspect supply air blower wheel for accumulated dirt or dust. Turn off power before attempting to remove access panel or to clean blower wheel.

H-Condenser Coil

Clean condenser coil annually with detergent or commercial coil cleaner and inspect monthly during the cooling season. Access panels are provided on front and back of condenser section.

L-Replacement Fuses

F4 Fuses (LCX Only) - See the following tables for the proper replacement fuse sizes. To use the tables on page 70, find the model, voltage, and horsepower to identify MOP on TABLE 22. Using MOP, refer to TABLE 23 for replacement fuse details.

F10 fuse (LGX/LCX) - For F10 replacement fuses refer to TABLE 23.

TABLE 22 - Unit MOP (Maximum Overcurrent Protection)**									
Model No.	**LCX180S**								
Voltage - 60Hz	**208/230V - 3 Ph**			**460V - 3 Ph**			**575V - 3 Ph**		
Horsepower	3	5	7.5	3	5	7.5	3	5	7.5
MOP	60	70	90	30	35	40	25	25	30
Model No.	**LCX210S**								
Voltage - 60Hz	**208/230V - 3 Ph**			**460V - 3 Ph**			**575V - 3 Ph**		
Horsepower	3	5	7.5	3	5	7.5	3	5	7.5
MOP	100	100	110	45	45	50	35	40	40
Model No.	**LCX240S**								
Voltage - 60Hz	**208/230V - 3 Ph**			**460V - 3 Ph**			**575V - 3 Ph**		
Horsepower	5	7.5	10	5	7.5	10	5	7.5	10
MOP	110	125	125	50	50	60	40	45	45
Model No.	**LCX300S**								
Voltage - 60Hz	**208/230V - 3 Ph**			**460V - 3 Ph**			**575V - 3 Ph**		
Horsepower	5	7.5	10	5	7.5	10	5	7.5	10
MOP	125	125	150	50	60	60	45	50	50

**factory configured (no electric heat or power exhaust)

TABLE 23 - F4 Fuse Replacement				
MOP	**Class**	**Amps**	**Volts**	**Qty**
25	RK5	25	600	3
30	RK5	30	600	3
35	RK5	35	600	3
40	RK5	40	600	3
45	RK5	45	600	3
50	RK5	50	600	3
60	RK5	60	600	3
70	RK5	70	600	3
80	RK5	80	600	3
90	RK5	90	250	3
100	RK5	100	250	3
110	RK5	110	250	3
125	RK5	125	250	3
150	RK5	150	250	3
175	RK5	175	250	3

TABLE 24 - F10 Fuse Replacement Table				
Model No.	**LGX/LCX 180/210**	**LGX/LCX 240/300**		**LHX**
Voltage - 60Hz	All	208/230	460, 575	All
Class	ULCC	ULCC	ULCC	ULCC
QTY	3	3	3	3
AMP	12	30	12	12
Voltage	600	600	600	600

Factory Unit Controller Settings

Use the mobile service app to adjust parameters; menu paths are shown in each table. Refer to the Unit Controller manual provided with each unit.

TABLE 25 shows factory settings (in degrees, % of fan CFM, etc.). Record adjusted settings on the label located inside the compressor access panel.

When field installing optional kits and accessories, the Unit Controller must be configured to identify the option before it will function. Refer to FIGURE 42 and FIGURE 43 to determine whether the Unit Controller configuration I.D. must change. To configure the option, use MAIN MENU > SETUP > INSTALL menu path. Press SAVE until CONFIGURATION ID 1 or 2 appears depending on the option installed. Change the appropriate character in the configuration I.D. For example, when an economizer is installed using a single enthalpy sensor, change configuration I.D. 1, the second character, to “S”.

TABLE 25 - 581318-01

LGX/LCX/LHX Staged Blower Parameters								
Parameter	Factory Setting						Field Setting	Description
	LGX/LCX				LHX			
	180S	210S	240S	300S	180S	240S		
Note: Any changes to Smoke CFM setting must be adjusted before the other CFM settings. Use SETTINGS > RTU OPTIONS > EDIT PARAMETERS (CFM)								
12	6000	7000	8000	10000	6000	8000	CFM	Blower CFM during smoke detection.
SETUP > TEST & BALANCE (can also use SETTINGS > RTU OPTIONS > BLOWER > SPEEDS) (CFM)								
17	3900	4550	5200	6500	3900	5200	CFM	Blower CFM during COOLING LOW operation.
14	6000	7000	8000	10000	5400	7200	CFM	Blower CFM during COOLING HIGH operation.
13	6000	7000	8000	10000	6000	8000	CFM	Blower CFM during Heating operation.
18	6000	7000	8000	10000	6000	8000	CFM	Blower CFM during ventilation.
SETUP > TEST & BALANCE (can also use SETTINGS > RTU OPTIONS > DAMPER) (%)								
9	0%	0%	0%	0%	0%	0%	%	Damper min. position during LOW blower operation.
132	0%	0%	0%	0%	0%	0%	%	Damper min. position during HIGH blower operation
215	50%	50%	50%	50%	50%	50%	%	Min. damper % for stg 1 power exhaust operation.
SETTINGS > RTU OPTIONS > EDIT PARAMETERS (%)								
29	101	101	101	101	101	101	% Open	Damper minimum position during G blower operation.*
219	75	75	75	75	75	75	%	Min. damper % for stg 2 power exhaust operation.
216	10	10	10	10	10	10	%	Deadband % for stage 1 power exhaust operation.
220	10	10	10	10	10	10	%	Deadband % for stage 2 power exhaust operation.
224	100	100	100	100	100	100	Sec.	Stage 1 power exhaust off-delay in seconds.
30	70	70	70	70	70	70	% Speed	Minimum blower speed % for stage 2 power exhaust operation.

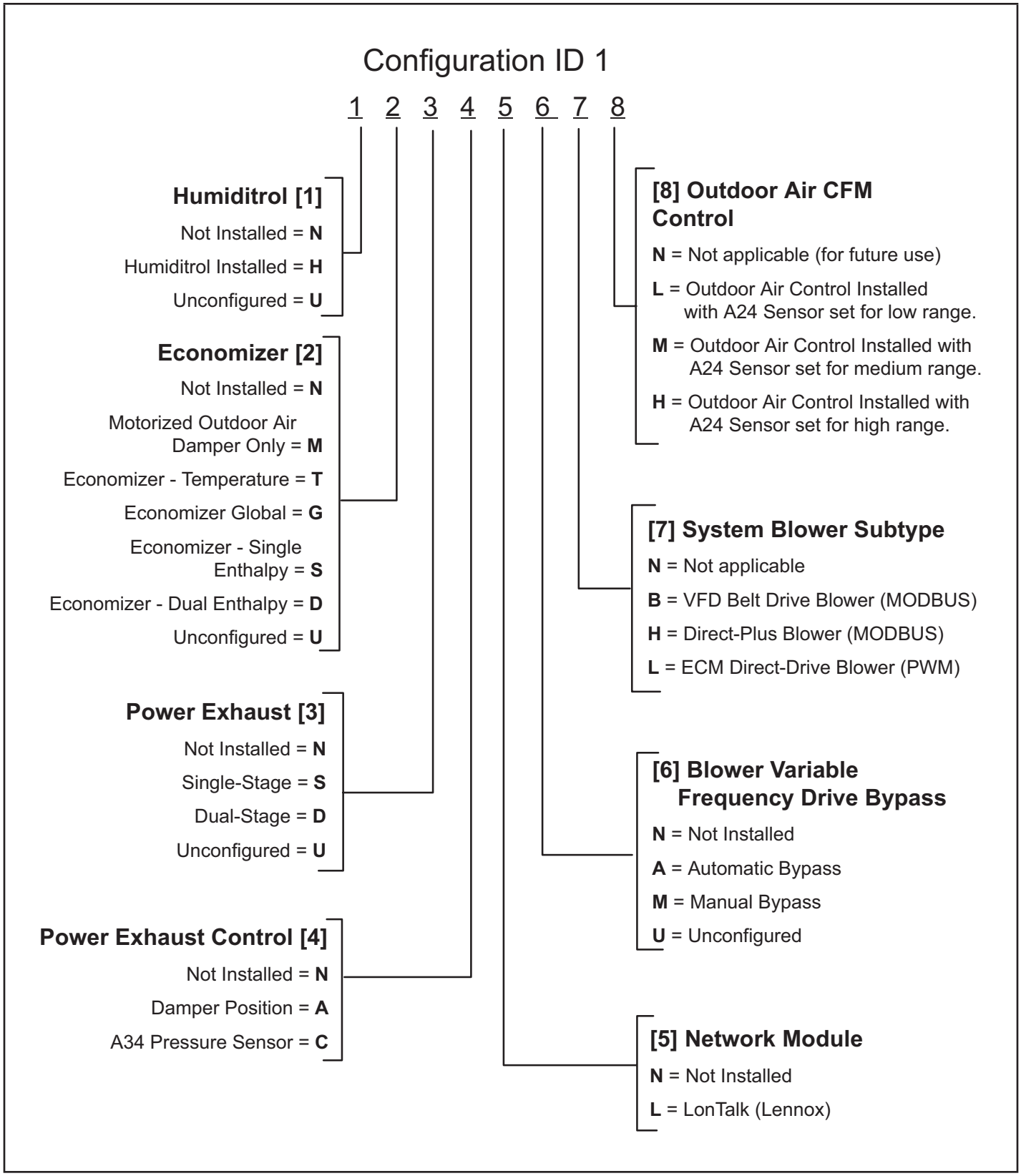
Configuration ID 1
1 2 3 4 5 6 7 8
Humiditrol [1]
Not Installed = N
Humiditrol Installed = H
Unconfigured = U
Economizer [2]
Not Installed = N
Motorized Outdoor Air Damper Only = M
Economizer - Temperature = T
Economizer Global = G
Economizer - Single Enthalpy = S
Economizer - Dual Enthalpy = D
Unconfigured = U
Power Exhaust [3]
Not Installed = N
Single-Stage = S
Dual-Stage = D
Unconfigured = U
Power Exhaust Control [4]
Not Installed = N
Damper Position = A
A34 Pressure Sensor = C
[8] Outdoor Air CFM Control
N = Not applicable (for future use)
L = Outdoor Air Control Installed with A24 Sensor set for low range.
M = Outdoor Air Control Installed with A24 Sensor set for medium range.
H = Outdoor Air Control Installed with A24 Sensor set for high range.
[7] System Blower Subtype
N = Not applicable
B = VFD Belt Drive Blower (MODBUS)
H = Direct-Plus Blower (MODBUS)
L = ECM Direct-Drive Blower (PWM)
[6] Blower Variable Frequency Drive Bypass
N = Not Installed
A = Automatic Bypass
M = Manual Bypass
U = Unconfigured
[5] Network Module
N = Not Installed
L = LonTalk (Lennox)

FIGURE 42

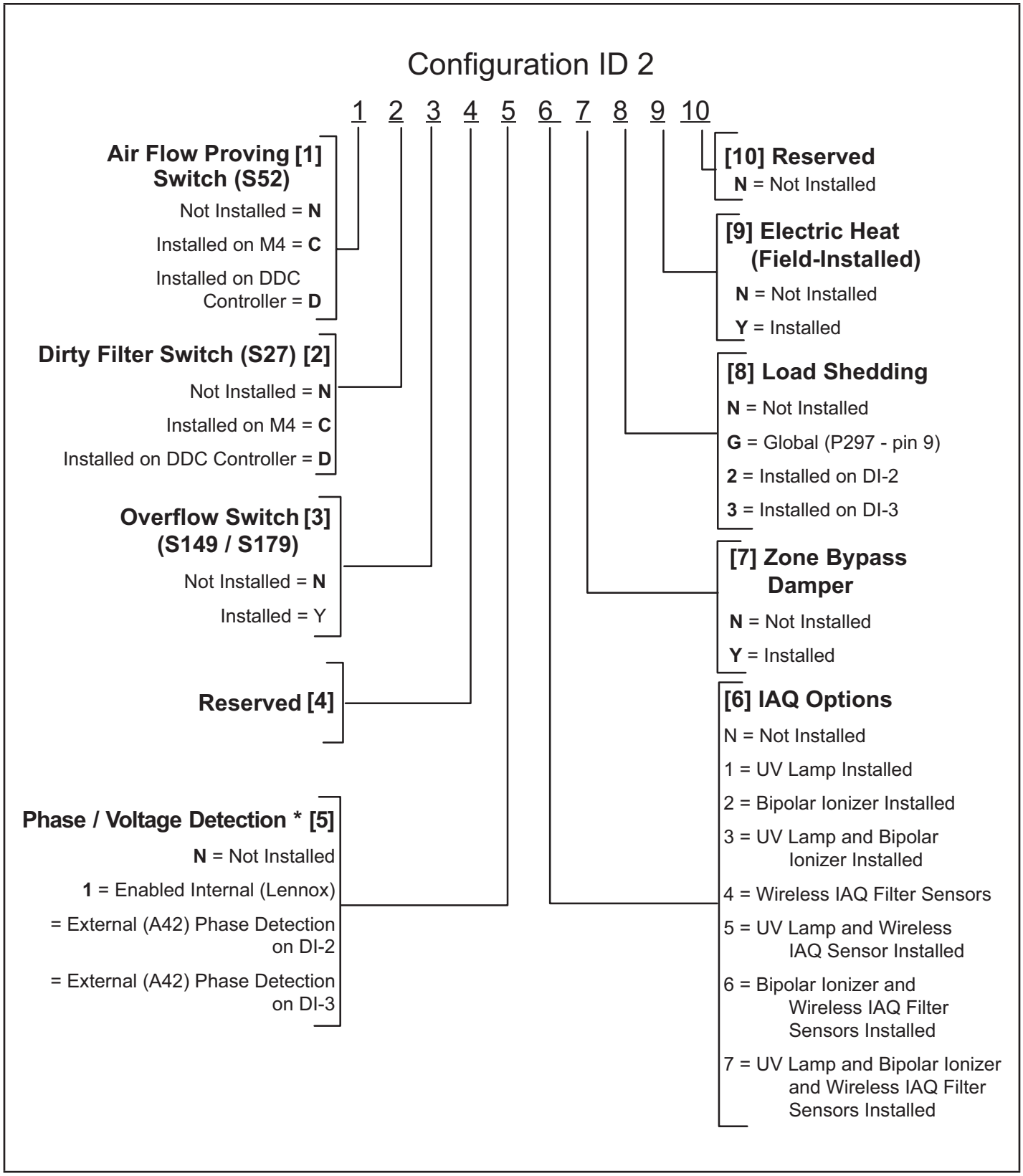
Configuration ID 2
1 2 3 4 5 6 7 8 9 10
Air Flow Proving Switch (S52) [1]
Not Installed = N
Installed on M4 = C
Installed on DDC Controller = D
Dirty Filter Switch (S27) [2]
Not Installed = N
Installed on M4 = C
Installed on DDC Controller = D
Overflow Switch (S149 / S179) [3]
Not Installed = N
Installed = Y
Reserved [4]
Phase / Voltage Detection * [5]
N = Not Installed
1 = Enabled Internal (Lennox)
= External (A42) Phase Detection on DI-2
= External (A42) Phase Detection on DI-3
[10] Reserved
N = Not Installed
[9] Electric Heat (Field-Installed)
N = Not Installed
Y = Installed
[8] Load Shedding
N = Not Installed
G = Global (P297 - pin 9)
2 = Installed on DI-2
3 = Installed on DI-3
[7] Zone Bypass Damper
N = Not Installed
Y = Installed
[6] IAQ Options
N = Not Installed
1 = UV Lamp Installed
2 = Bipolar Ionizer Installed
3 = UV Lamp and Bipolar Ionizer Installed
4 = Wireless IAQ Filter Sensors
5 = UV Lamp and Wireless IAQ Sensor Installed
6 = Bipolar Ionizer and Wireless IAQ Filter Sensors Installed
7 = UV Lamp and Bipolar Ionizer and Wireless IAQ Filter Sensors Installed

FIGURE 43

Decommissioning

Before carrying out this procedure, it is essential that the technician is completely familiar with the equipment and all its detail. It is recommended good practice that all refrigerants are recovered safely.

Prior to the task being carried out, an oil and refrigerant sample shall be taken in case analysis is required prior to re-use of recovered refrigerant. It is essential that electrical power is available before starting decommissioning.

a) Become familiar with the equipment and its operation.

b) Isolate system electrically.

c) Before attempting the procedure, ensure that:

- mechanical handling equipment is available, if required, for handling refrigerant cylinders;
- all personal protective equipment is available and being used correctly;
- the recovery process is supervised at all times by a competent person;
- recovery equipment and cylinders conform to the appropriate standards.

d) Pump down refrigerant system, if possible.

e) If a vacuum is not possible, make a manifold so that refrigerant can be removed from various parts of the system.

f) Make sure that cylinder is situated on the scales before recovery takes place.

g) Start the recovery machine and operate in accordance with instructions.

h) Do not overfill cylinders (no more than 80% volume liquid charge).

i) Do not exceed the maximum working pressure of the cylinder, even temporarily.

j) When the cylinders have been filled correctly and the process completed, make sure that the cylinders and the equipment are removed from site promptly and all isolation valves on the equipment are closed off.

k) Recovered refrigerant shall not be charged into another REFRIGERATING SYSTEM unless it has been cleaned and checked.

⚠ IMPORTANT

Equipment shall be labelled stating that it has been decommissioned and emptied of refrigerant. The label shall be signed and dated. Ensure that there are labels on the equipment that state the flammability of the refrigerant used.

START-UP REPORT

Job Name:_____

Store No._____Start-Up Date:_____

Address:_____

City:_____State:_____

Start-Up Contractor:_____

Technician:_____

Model No.:_____

Serial No.:_____

RTU No.:_____ Catalog No.:_____

Inspections and Checks

Damage? Yes No R454B ☐

If yes, reported to:_____

_____

Verify factory and field-installed accessories.

Check electrical connections. Tighten if necessary.

Supply voltage: L1-L2_____L1-L3_____L2-L3_____

If unit contains a 208-230/240 volt transformer:
Check primary transformer tap ☐
Transformer secondary voltage: _____

Cooling Checks

Compressor Rotation ☐ Ambient Temp._____Return Air Temp._____ Supply Air Temp._____

	Compressor Amps			Compressor Volts			Pressures		Condenser Fan Amps			CC Heater Amps
	L1	L2	L3	L1-L2	L1-L3	L2-L3	Disch.	Suct.	L1	L2	L3	L1
1												
2												
3												
4												

Blower Checks

Pulley/Belt Alignment ☐ Blower Rotation ☐
Set Screws Tight ☐ Belt Tension ☐

Nameplate Amps:_____ Volts:_____

Motor	Amps	Volts
	L1_____	L1-L2_____
	L2_____	L1-L3_____
	L3_____	L2-L3_____

Heating Checks - Gas

Fuel type: Nat. ☐ LP ☐ Inlet Pressure:_____in. w.c.

Return Air Temp.:_____ Supply Air Temp.:_____

Altitude:_____ Primary Limits Operate: ☐

CO_2%:

Gas Valve	Manifold Pressure	
	Low Fire	High Fire
GV1		
GV2		

Control Type

Heating Checks - Electric

Return Air Temp.:_____ Supply Air Temp.:_____
Limits Operate: ☐

	Amps						
	L1	L2	L3		L1	L2	L3
1				10			
2				11			
3				12			
4				13			
5				14			
6				15			
7				16			
8				17			
9				18			

Accessory Checks

Power Exhaust Amps

1 _____ 2 _____ None ☐

Economizer Operation

Min. Pos. ☐ Motor travel full open/close ☐