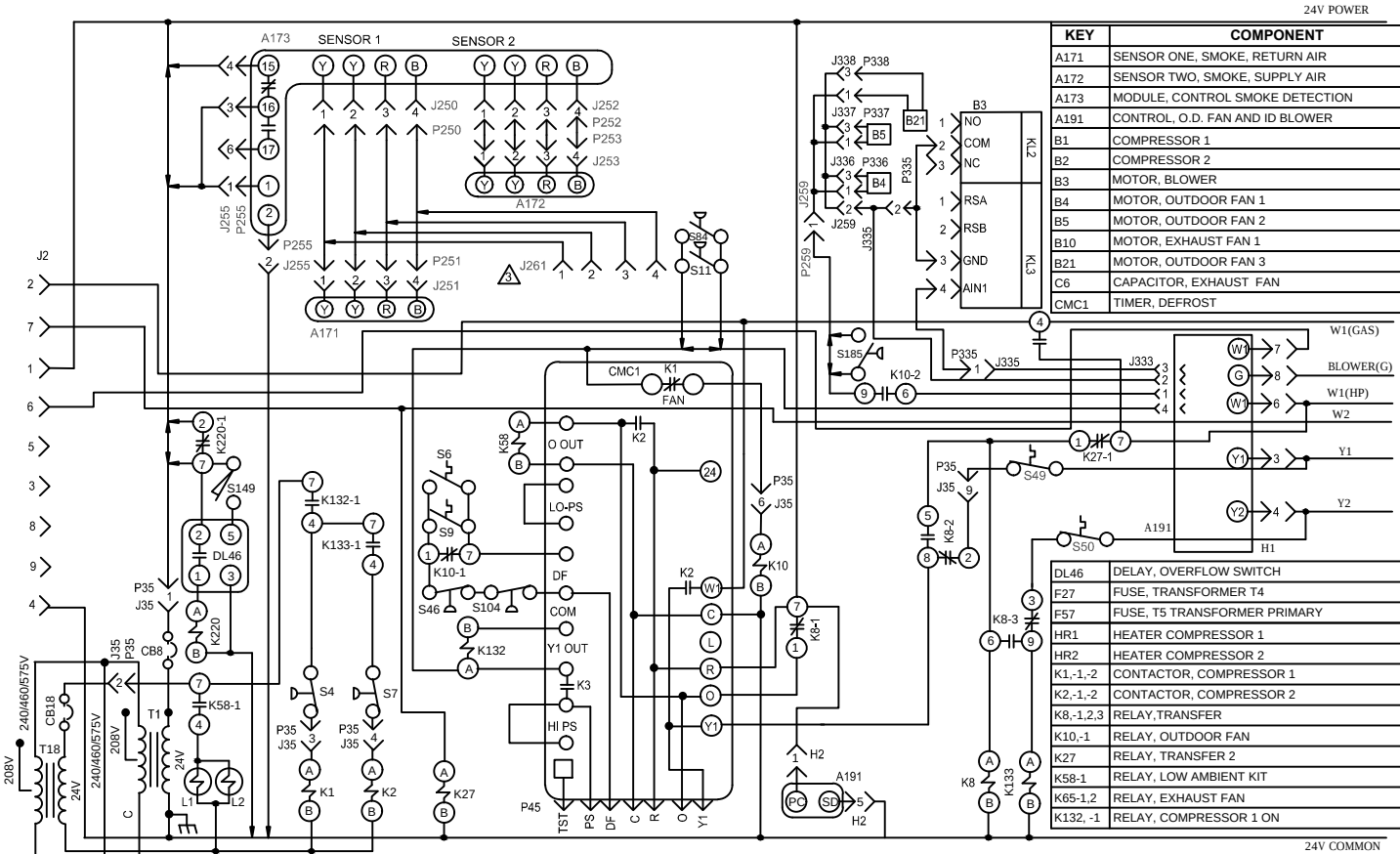

KEY	COMPONENT
A171	SENSOR ONE, SMOKE, RETURN AIR
A172	SENSOR TWO, SMOKE, SUPPLY AIR
A173	MODULE, CONTROL SMOKE DETECTION
A191	CONTROL, O.D. FAN AND ID BLOWER
B1	COMPRESSOR 1
B2	COMPRESSOR 2
B3	MOTOR, BLOWER
B4	MOTOR, OUTDOOR FAN 1
B5	MOTOR, OUTDOOR FAN 2
B10	MOTOR, EXHAUST FAN 1
B21	MOTOR, OUTDOOR FAN 3
C6	CAPACITOR, EXHAUST FAN
CMC1	TIMER, DEFROST

DL46	DELAY, OVERFLOW SWITCH
F27	FUSE, TRANSFORMER T4
F57	FUSE, T5 TRANSFORMER PRIMARY
HR1	HEATER COMPRESSOR 1
HR2	HEATER COMPRESSOR 2
K1,-1,-2	CONTACTOR, COMPRESSOR 1
K2,-1,-2	CONTACTOR, COMPRESSOR 2
K8,-1,2,3	RELAY,TRANSFER
K10,-1	RELAY, OUTDOOR FAN
K27	RELAY, TRANSFER 2
K58-1	RELAY, LOW AMBIENT KIT
K65-1,2	RELAY, EXHAUST FAN
K132, -1	RELAY, COMPRESSOR 1 ON

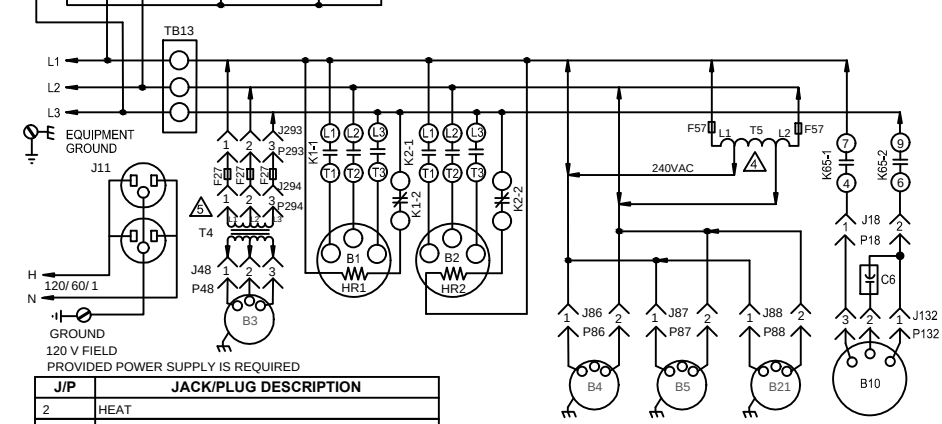

K133,-1	CONTACTOR, COMPRESSOR 2 ON
K220,-1	RELAY, OVERFLOW SWITCH
L1	VALVE, REVERSING 1
L2	VALVE, REVERSING 2
S4	SWITCH, LIMIT HI PRESS COMP 1
S6	SWITCH, DEFROST COMPRESSOR 1
S7	SWITCH, LIMIT HI PRESS COMP 2
S9	SWITCH, DEFROST COMPRESSOR 2
S11	SWITCH, LOW PRESS, LOW AMBIENT KIT
S46	SWITCH, DEFROST TERMINATION
S49	SWITCH, FREEZESTAT COMP 1
S50	SWITCH, FREEZESTAT COMP 2
S84	SWITCH, LOW PRESS, LOW AMBIENT KIT COMP 2
S104	DEFROST TERMINATION 2
S149	SWITCH, OVERFLOW
S185	SWITCH, LOW PRESSURE FAN LOCKOUT
T1	TRANSFORMER, CONTROL
T4	TRANSFORMER, BLOWER MOTOR
T5	TRANSFORMER, OUTDOOR FAN MOTOR
T18	TRANSFORMER
TB2	TERMINAL STRIP, UNIT
TB13	TERMINAL STRIP, POWER DISTRIBUTION

J/P	JACK/PLUG DESCRIPTION
2	HEAT
11	GFI RECEPTACLE
18	EXHAUST FAN COMPT
35	TEST HEAT
36	TEST COOL
48	MOTOR, FRESH AIR BLOWER
86	OUTDOOR FANS 1
87	OUTDOOR FANS 2
88	OUTDOOR FANS 3
132	EXHAUST FAN MOTOR 1
250	SMOKE DETECTOR ONE
251	SMOKE DETECTOR ONE
252	SMOKE DETECTOR TWO
253	SMOKE DETECTOR TWO
255	MODULE, CONTROL SMOKE DETECTION
259	BLOWER ECM MOTOR
261	SMOKE DETECTOR JUMPER
293	F27 LINE SIDE
294	F27 LOAD SIDE

333	0-5V TRANSDUCER INPUT
335	EBM CONTROL
336	OD FAN CONTROL, B4
337	OD FAN CONTROL, B5
338	OD FAN CONTROL, B21

1. NOTE - FOR USE WITH COPPER CONDUCTORS ONLY REFER TO UNIT RATING PLATE FOR MINIMUM CIRCUIT AMPACITY AND MAXIMUM OVERCURRENT PROTECTION SIZE.

2. IMPORTANT: TO PREVENT MOTOR BURNOUT, NEVER CONNECT MORE THAN ONE MOTOR LEAD TO ANY ONE CONNECTION. TAPE UNUSED MOTOR LEADS

3. CONNECT A172 SENSOR TO J261 ON SUPPLY AIR SMOKE DETECTOR ONLY

4. T5 USED ON G AND J VOLTAGE ONLY

4. T4 USED ON J VOLTAGE ONLY

DENOTES OPTIONAL COMPONENTS
LINE VOLTAGE FIELD INSTALLED

NOTE - IF ANY WIRE IN THIS APPLIANCE IS REPLACED IT MUST BE REPLACED WITH WIRE OF LIKE SIZE, RATING, TERMINATION AND INSULATION THICKNESS

WARNING - ELECTRIC SHOCK HAZARD, CAN CAUSE INJURY OR DEATH UNIT MUST BE GROUNDED IN ACCORDANCE WITH NATIONAL AND LOCAL CODES

DISCONNECT ALL POWER BEFORE SERVICING.

11/16	WIRING DIAGRAM 537848-02	11/16
COOLING		
KDB 122 - G,J,Y		
SECTION B		REV. 0
Supersedes	New Form No. 537848-02	