PACKAGED HEAT PUMP

LRP13HPK

MERIT® SERIES

Constant Torque Blower | Single-Phase | R-454B | 60Hz

RESIDENTIAL
PRODUCT SPECIFICATIONS (EHB)

SEER2 - 13.4
HSPF2 - 6.7
2 to 5 Tons
Cooling Capacity - 23,000 to 56,000 Btuh
Heating Capacity - 21,600 to 58,000 Btuh
Optional Electric Heat - 5 to 20 kW

MERIT® SERIES

MODEL NUMBER IDENTIFICATION

L RP 13 HP K 36 E P -1 -A

- **Brand** — L = Lennox
- **Product Type** — RP = Residential Packaged Unit
- **Nominal SEER2**
- **Unit Type** — HP = Packaged Heat Pump
- **Refrigerant Type** — K = R-454B
- **Nominal Cooling Capacity**
  - 24 = 2 tons
  - 30 = 2.5 tons
  - 36 = 3 tons
  - 42 = 3.5 tons
  - 48 = 4 tons
  - 60 = 5 tons
- **Blower** — E = High Efficiency Constant Torque Blower Motor
- **Voltage** — P = 208/230V-1phase-60Hz
- **Major Revision Sequence** — 1 = 1st Generation
- **Minor Revision Sequence** — A = 1st Generation

Form Number 211095 | April 2026
Supersedes all previous versions

CONTENTS

Approvals And Warranty 2
Blower Data 14
Control Options 6
Cooling Ratings 9
Dimensions 15
- Accessories 16
- Unit 15
Electrical Data 7
Electric Heat Capacities 13
Electric Heat Data 12
Features 3
Field Wiring 13
Heating Ratings 11
Installation Clearances 13
Model Number Identification. 1
Optional Accessories - Order Separately 8
Specifications 7

APPROVALS AND WARRANTY

APPROVALS

- AHRI Standard 210/240-2023 Certified
- Design Certified by ETL Intertek
- Cooling system rated according to DOE test procedures
- Heating ratings are Certified by AHRI according to U.S. Department of Energy (DOE) test procedures and Federal Trade Commission (FTC) labeling regulations
- Units are ETL Certified for the U.S. and Canada
- Unit and components are UL bonded for grounding to meet safety standards for servicing
- All models meet UL 60335-2-40 Refrigerant Detector Requirements
- Optional electric heaters are ETL listed for the US and Canada and are rated and tested according to DOE test procedures and FTC labeling regulations
- All models with the Optional Seismic Strapping Kit installed have Seismic Certification for 2018 International Building Code (IBC) and 2019 California Building Code (CBC) ASCE 7
- Test operated at the factory before shipment ensuring dependable operation at start-up

WARRANTY

- Compressor:
  - Limited ten years in residential installations
  - Limited five years in non-residential installations
- All other covered components:
  - Limited five years in residential installations
  - Limited one year in non-residential installations

NOTE - Refer to Lennox® Basic Limited Warranty at www.Lennox.com for additional details.

FEATURES

APPLICATIONS

- Designed for outdoor installations at ground level or rooftop for residential applications

COOLING/HEATING SYSTEM

R-454B Refrigerant
- Low GWP (Global Warming Potential)
- Zero ODP (Ozone Depletion Potential)
- Low Toxicity/Lower Flammability - A2L
- Unit is factory pre-charged

Indoor and Outdoor Coils
- Copper tube with aluminum fin coils

Anti-Microbial Evaporator Coil Drain Pan
- Anti-Microbial additive resists growth of mold and mildew on drain pan which improves indoor air quality and reduces drain line blockage
- Drain pan overflow switch monitors condensate level in drain pan and shuts down unit if drain becomes clogged
- Fully insulated to reduce condensation

Outdoor Coil Fan
- Weather protected heavy duty condenser fan motor
- Coated steel fan blades for long life
- Corrosion-resistant coated steel fan guard
- Internally mounted
- Totally enclosed fan motor

Four-Way Reversing Valve
- Rapid changeover of refrigerant flow direction from cooling to heating and vice versa
- Operates on pressure differential between outdoor unit and indoor coil
- Factory installed

High Pressure Switch
- Protects the system from high pressure conditions
- Automatic reset.

Loss of Charge Switch
- Protects compressor from damage from low/no refrigerant charge conditions
- SPST, normally-closed
- Automatic reset

Service Valves
- Fully serviceable brass valves installed in discharge and liquid lines

LOW GWP REFRIGERANT DETECTION SYSTEM (RDS)

- Complies with UL 60335-2-40 approved standard
- Required for all systems using R-454B refrigerant
- Factory installed on all units
- Consists of a leak detection sensor(s) and a mitigation control
- Ensures safe operation for systems equipped with R-454B refrigerant
- Sensor(s) monitors indoor coil area for any refrigerant leaks if they occur
- If a leak is detected the refrigerant detection system will prevent compressor and heating operation until a leak is no longer detected
- Refrigeration detection system energizes blower while a leak is detected to mitigate any concentrations of refrigerant from the unit and the system

COMPRESSOR

Scroll Compressor
- High efficiency with uniform suction flow
- Constant discharge flow, high volumetric efficiency and quiet operation
- Low gas pulses during compression reduces operational sound levels
- Compressor motor is internally protected from excessive current and temperature
- Muffler in discharge line reduces operating sound levels
- Compressor is installed in the unit on resilient rubber mounts for vibration free operation

Optional Accessories

Compressor Crankcase Heater
- Protects against refrigerant migration that can occur during low ambient operation

Compressor Hard Start Kit
- A PSC compressor motor does not normally need a potential relay and start capacitor
- In conditions such as low voltage, kit may be required to increase the compressor starting torque

Compressor Timed-Off Control
- Prevents compressor short-cycling
- Allows time for suction and discharge pressure to equalize
- Permits compressor start-up in an unloaded condition
- Automatic reset
- Five minute delay between compressor shut-off and start-up

Low Ambient Kit (40°F)
- Cycles the outdoor fan while allowing compressor operation in the cooling cycle
- This intermittent fan operation allows the system to operate without icing the evaporator coil and losing capacity
- Designed for use in ambient temperatures no lower than 40°F

NOTE - A crankcase heater must be installed on the compressor.

FEATURES

CABINET

- Conditioned areas insulated with foil faced insulation
- Minimizes heat loss and reduce operating sound levels
- Powder paint for maximum durability
- Easy service access
- Steel louvered panels provides complete coil protection
- Full perimeter heavy-gauge galvanized steel base rail
- Base rails have rigging holes
- Two sides of the base rail have forklift slots
- Raised edges around duct and power entry openings in the bottom of the unit for water protection

Airflow Choice

- Units are shipped with all air openings sealed
  - For downflow (vertical) applications, remove the downflow duct covers
  - For horizontal applications, remove the horizontal duct covers

Electrical Inlets and Service Valves

- Standard field wiring electrical inlets are located in one central area of the cabinet
- See dimension drawing
- Gauge ports are located inside the cabinet

Optional Accessories

Base Rail Opening Closure Kit

- Kit consists of panels and hardware to cover base rail rigging holes and forklift slot openings

Bottom Power Entry Kit

- Allows field wiring through the unit base pan

Rectangular to Round Duct Adaptor Kits

- Downflow or horizontal kits available
- Converts rectangular supply and return air openings on unit cabinet to round diameter
- Several sizes available

Clip Curb (Full Perimeter)

- Interlocking tabs fasten corners together
- No tools required
- Fully gasketed around curb perimeter and supply and return openings
- Available in 8, 14, 18 and 24 inch heights
- Shipped knocked down

Adjustable Pitch Roof Curb (Full Perimeter)

- Fully adjustable pitch curb provides a level platform for packaged units
- Allows flexible installations on roofs with sloped or uneven angles
- Adjustable from 2/12 to 6/12 pitch
- Fully gasketed around curb perimeter and supply and return openings
- Clip Curb (knock-down) and Welded models available

All Curbs

- IBC 2018 compliant
- CBC 2019 compliant
- Seismic rating - SDS 2.0g, z/h=1, Ip=1.5
- Wind rating - 240 mph (Lateral), 214 mph (Uplift)
- Maximum load rating - 800 lbs.

Adaptor Curbs (not shown)

- Curbs are regionally sourced
- Dimensions vary based upon the source

NOTE - Contact your local sales representative for a detailed cut sheet with applicable dimensions.

Strapping Kit - Seismic

- Heavy-gauge galvanized steel
- Kit contains 4 brackets and mounting hardware

FEATURES

AIR FILTER (required)

Optional Accessories

Internal Filter Rack Kits
- Available for 1 in. thick filters
- Filter rails mount internal to unit

NOTE - Filters must be field provided.

SUPPLY AIR BLOWER

Direct drive blower
- Blower wheel is statically and dynamically balanced
- Resiliently mounted
- Blower assembly easily removed for servicing

Constant Torque Blower Motor
- DC Brushless Motor
- High Efficiency Constant Torque
- ECM (Electronically Commutated Motor)
- Motor is programmed to provide constant torque at each of the selectable speeds
- Fixed blower "On" delay prevents cold air from entering system during gas heating demand
- See Blower Performance tables

CONTROLS

Refrigerant Detection System (RDS) Control
- Monitors leak detection sensor
- Connections for external RDS alarm system (not furnished)
- LED for power, monitoring and sensor status
- Test/Reset button for troubleshooting

Defrost Control
- Furnished as standard equipment
- Enables a defrost cycle for every 30, 60 or 90 minutes (adjustable) of compressor "on" time at outdoor coil temperatures below freezing
- Units are quiet-shift enabled
- Compressor is de-energized entering and exiting the defrost cycle, reducing system sounds
- Sensor mounted on liquid line determines when defrost cycle is required and also when to terminate cycle
- Anti-short cycle, timed-off control incorporated into the board

24 Volt Transformer
- 40VA transformer furnished and factory installed in control area

Optional Accessories

Thermostat
- Thermostat is not furnished with unit
- See Page 6

ELECTRIC HEAT (5-20 KW)

Optional Accessories
- Field installed internal to unit cabinet
- Available in several voltages and kW sizes
- Helix wound nichrome heating elements exposed directly in air stream
- Instant heat transfer
- Low element temperatures and long service life
- Cutoff limit control provides positive protection in case of excessive temperatures
- Factory assembled with controls installed and wired

Single Point Power Supply Kits
- Control Box used with optional electric heat
- For single power supply connected to multi-circuit electric heat

NOTE - Side power entry only.

CONTROL OPTIONS

E40 Smart Wi-Fi Thermostat

- 3 Htg.-2 Clg.
- 7-day, universal, programmable, touchscreen thermostat
- Controls dehumidification during cooling mode and humidification during heating mode
- Smooth Setback Recovery and compressor short-cycle protection
- One-Touch Away Mode, Smart Away™ (geo-fencing), equipment maintenance reminders and scheduling
- Smart home automation compatible with Amazon Alexa®, Google Assistant, Control4®, Building36®, Matter and IFTTT
- Lennox® Home App controls temperature, fan operation, set programs/schedules and set Away mode on a smartphone
- Lennox Smart Tech App allows the installer to commission the system and remotely turn the system on and off during setup or service call on a smartphone

L40 Smart Wi-Fi Thermostat

- 2 Htg.-1 Clg.
- 7-day, universal, programmable, touchscreen thermostat
- Provides temperature control for gas, electric and heat pumps for single-stage heating or cooling systems (including dual-fuel operation)
- One-Touch Away Mode, Smart Away™ (geo-fencing), equipment maintenance reminders and scheduling
- Smooth Setback Recovery and compressor short-cycle protection
- Smart home automation compatible with Amazon Alexa®, Google Assistant, Control4®, Building36®, Matter and IFTTT
- Lennox® Home App controls temperature, fan operation, set programs/schedules and set Away mode on a smartphone
- Lennox Smart Tech App allows the installer to commission the system and remotely turn the system on and off during setup or service call on a smartphone

NOTE - Two-stage heating for Dual-Fuel Heat Pump applications only

M40 Smart Wi-Fi Thermostat

- 3 Htg.-2 Clg.
- 7-day, universal, programmable, touchscreen thermostat
- Smooth Setback Recovery and compressor short-cycle protection
- One-Touch Away Mode, Smart Away™ (geo-fencing), equipment maintenance reminders and scheduling
- Smart home automation compatible with Amazon Alexa®, Google Assistant, Control4®, Building36®, Matter and IFTTT
- Lennox® Home App controls temperature, fan operation, set programs/schedules and set Away mode on a smartphone
- Lennox Smart Tech App allows the installer to commission the system and remotely turn the system on and off during setup or service call on a smartphone

NOTE - Please refer to the individual Product Specifications for these products for full information.

CONTROLS - ORDERING

E40 Smart Wi-Fi Thermostat	3-3/8 x 5-3/8 x 1	**30L26**
Lennox® Smart Room Sensor	4 x 5-1/2 x 3	**22V25**
Lennox® Smart Air Quality Monitor	3-5/8 x 4-3/8 x 1-3/8	**21P02**
Lennox® Wireless Extender	4 x 5-1/2 x 2-1/2	**22V26**
L40 Smart Wi-Fi Thermostat	2-13/16 x 2-13/16 x 1/4	**27V51**
M40 Smart Wi-Fi Thermostat	3-5/16 x 4-5/16 x 7/8	**30L27**
Thermostat Accessories		
[1] Discharge Air Temperature Sensor (For E40)		**88K38**
[2] Remote Outdoor Air Temperature Sensor (For dual-fuel and Humiditrol®)		**X2658**

[1] Optional for service diagnostics (E40).

[2] Remote Outdoor Air Temperature Sensor is used with conventional (non-Lennox® Communicating) outdoor units (sensor is furnished with Lennox® Communicating outdoor units). Allows the thermostat to display outdoor temperature. Required in dual-fuel and Humiditrol® applications.

SPECIFICATIONS

Size			24	30	36	42	48	60
Nominal Tonnage			2	2.5	3	3.5	4	5
Cooling / Heating Performance	**Cooling**	Total capacity - Btuh	23,000	28,600	34,000	39,500	45,500	56,000
		[1] SEER2 (Btuh/Watt)	13.4	13.4	13.4	13.4	13.4	13.4
		[1] EER2 (Btuh/Watt)	10.6	10.6	10.6	10.6	10.6	10.6
	High Temperature Heat	Total capacity - Btuh	21,600	25,800	32,600	40,000	47,000	58,000
		[1] HSPF2 (Region IV)	6.7	6.7	6.7	6.7	6.7	6.7
		[1] COP	3.4	3.7	3.6	3.5	3.6	3.3
	Low Temperature Heat	Total capacity - Btuh	11,900	15,000	18,300	22,500	28,200	33,300
		[1] COP	1.9	2.2	2.1	2.1	2.3	2.0
[2] Sound Rating Number		dBA	78	78	78	78	79	78
Refrigerant		Type	R-454B	R-454B	R-454B	R-454B	R-454B	R-454B
		Charge	5 lbs. 1 oz.	5 lbs. 1 oz.	6 lbs. 5 oz.	9 lbs. 6 oz.	8 lbs. 15 oz.	9 lbs. 6 oz.
Compressor Type (number)			Scroll (1)	Scroll (1)	Scroll (1)	Scroll (1)	Scroll (1)	Scroll (1)
Outdoor Coil		Net face area - ft.^{2}	16.4	16.4	16.4	16.6	16.6	18.6
		Tube diameter - in.	5/16	5/16	5/16	5/16	5/16	5/16
		Rows	1	1	1	2	2	2
		Fins - in.	22	22	22	22	22	22
Outdoor Fan		HP	1/6	1/6	1/6	1/4	1/4	1/4
		Diameter - in.	22	22	22	24	24	24
		Blades	4	4	4	3	3	3
Indoor Coil		Net face area - ft.^{2}	4.4	4.4	4.4	6.8	6.8	6.8
		Tube Diameter - in.	5/16	3/8	3/8	3/8	3/8	3/8
		Rows	3	3	3	3	3	3
		Fins - in.	15	15	15	15	15	15
		Condensate drain size (NPT) - in.	3/4	3/4	3/4	3/4	3/4	3/4
Indoor Blower		HP	1/3	1/2	1/2	3/4	3/4	1
		Wheel (Number) diameter x width - in.	(1) 10 x 6	(1) 10 x 6	(1) 10 x 8	(1) 10 x 10	(1) 10 x 10	(1) 12 x 10
Net weight of basic unit - lbs.			369	379	388	460	464	503
Shipping weight of basic unit - lbs.			374	384	393	465	469	508

ELECTRICAL DATA

	Line voltage data (Volts-Phase-Hz)	**208/230V-1-60**					
	[3] Maximum overcurrent protection (MOCP) amps	25	30	40	40	50	60
	[4] Minimum Circuit Ampacity (MCA)	17.5	20.9	24.8	27.9	32.0	37.5
Compressor	Rated load amps	10.9	12.7	16.6	16.2	19.5	25.6
Outdoor Coil Fan Motor	Full load amps	1.0	1.0	1.0	1.7	1.7	1.7
Indoor Blower Motor	Full load amps	2.8	4.1	3.0	6.0	6.0	3.9

[1] AHRI Certified to AHRI Standard 210/240:
Cooling Ratings - 95°F outdoor air temperature and 80°F db/67°F wb entering indoor coil air.
High Temperature Heating Ratings - 47°F db/43°F wb outdoor air temperature and 70°F entering indoor coil air.
Low Temperature Heating Ratings - 17°F db/15°F wb outdoor air temperature and 70°F entering indoor coil air.

[2] Sound Rating Number rated in accordance with test conditions included in AHRI Standard 270.

[3] HACR type circuit breaker or fuse.

[4] Refer to National or Canadian Electrical Code manual to determine wire, fuse and disconnect size requirements.

OPTIONAL ACCESSORIES - ORDER SEPARATELY

Item		Order Number	Size 24	30	36	42	48	60
CONTROLS								
M30 Smart Wi-Fi Thermostat		**15Z69**	•	•	•	•	•	•
[1] Remote Outdoor Temperature Sensor		**X2658**	•	•	•	•	•	•
COOLING SYSTEM								
Compressor Crankcase Heater		**27U17**	•	•	•			
		27P79				•	•	•
Compressor Hard Start Kit		**10J42**	•	•				
		88M91			•	•	•	•
Compressor Timed-Off Control		**47J28**	•	•	•	•	•	•
Low Ambient Kit (40°F)		**21D20**	•	•	•	•	•	•
CABINET								
Base Rail Opening Closure Kit		**21J84**	•	•	•	•	•	•
Rectangular to Round Duct Adaptor Kits	Downflow - 14 in. dia.	**20X82**	•	•	•			
	- 14 in. dia.	**21D26**				•	•	•
	Horizontal - 14 in. dia.	**21J92**	•	•	•			
	- 14 in. dia.	**21D24**				•	•	•
	- 16 in. dia.	**22U78**				•	•	•
	- 18 in. dia.	**22U79**				•	•	•
ELECTRICAL								
Bottom Power Entry Kit		**21J78**	•	•	•	•	•	•
ELECTRIC HEAT								
Electric Heat Size - 208/240V-1ph	5 kW	**10W47**	•	•	•	•	•	•
	7.5 kW	**10W48**	•	•	•	•	•	•
	10 kW	**10W49**	•	•	•	•	•	•
	15 kW	**10W50**			•	•	•	•
	20 kW	**10W51**				•	•	•
SINGLE POINT POWER SUPPLY KITS (FOR ELECTRIC HEAT) - SIDE POWER ENTRY ONLY								
Single Point Power Kits	For 5 kW Electric Heat	**13W88**	•	•	•	•	•	•
	For 7.5 kW Electric Heat	**13W89**	•	•	•	•	•	•
	For 10 kW Electric Heat	**13W90**	•	•	•	•	•	•
	For 15-20 kW Electric Heat	**13W91**			•	•	•	•
INDOOR AIR QUALITY								
[2] Internal Filter Rack Kit (filters not furnished)	(1) 20 x 20 + (1) 14 x 20	**11U73**	•	•	•			
	(2) 20 x 20	**11U74**				•	•	•
ROOF CURBS								
Clip Curbs								
	8 in. height	**21J13**	•	•	•			
		21J17				•	•	•
	14 in. height	**21J14**	•	•	•			
		21J19				•	•	•
	18 in. height	**21J15**	•	•	•			
		21J20				•	•	•
	24 in. height	**21J16**	•	•	•			
		21J25				•	•	•
Adjustable Pitch Roof Curbs								
Welded Curbs		**22V54**	•	•	•			
		22V55				•	•	•
Clip Curbs		**21J26**	•	•	•			
		21U04				•	•	•
Strapping Kits for Roof Curbs								
Strapping Kit - Seismic		**21J75**	•	•	•	•	•	•

[1] Allows the thermostat to display outdoor temperature.
[2] Filters are not furnished and must be field provided.

COOLING RATINGS

NOTE − For Temperatures and Capacities not shown in tables, see bulletin − Cooling Unit Rating Table Correction Factor Data in Miscellaneous Engineering Data section.

2 TON - LRP13HPK24

Entering Wet Bulb Temperature	Total Air Volume	Outdoor Air Temperature Entering Outdoor Coil																			
		85°F					95°F					105°F					115°F				
		Total Cool Cap.	Comp. Motor Input	Sensible To Total Ratio (S/T) Dry Bulb			Total Cool Cap.	Comp. Motor Input	Sensible To Total Ratio (S/T) Dry Bulb			Total Cool Cap.	Comp. Motor Input	Sensible To Total Ratio (S/T) Dry Bulb			Total Cool Cap.	Comp. Motor Input	Sensible To Total Ratio (S/T) Dry Bulb		
	cfm	kBtuh	kW	75°F	80°F	85°F	kBtuh	kW	75°F	80°F	85°F	kBtuh	kW	75°F	80°F	85°F	kBtuh	kW	75°F	80°F	85°F
59°F	700	23.2	1.36	.96	1.00	1.00	22.2	1.56	.99	1.00	1.00	21.4	1.80	1.00	1.00	1.00	20.4	2.06	1.00	1.00	1.00
	850	24.6	1.36	1.00	1.00	1.00	23.6	1.56	1.00	1.00	1.00	22.6	1.79	1.00	1.00	1.00	21.6	2.06	1.00	1.00	1.00
	1000	25.6	1.36	1.00	1.00	1.00	24.6	1.56	1.00	1.00	1.00	23.6	1.79	1.00	1.00	1.00	22.4	2.05	1.00	1.00	1.00
63°F	700	24.0	1.36	.79	.93	1.00	22.8	1.56	.81	.96	1.00	21.8	1.80	.83	.98	1.00	20.4	2.06	.86	1.00	1.00
	850	24.8	1.36	.85	1.00	1.00	23.6	1.56	.87	1.00	1.00	22.6	1.79	.90	1.00	1.00	21.6	2.06	.93	1.00	1.00
	1000	25.8	1.36	.90	1.00	1.00	24.6	1.56	.93	1.00	1.00	23.6	1.79	.96	1.00	1.00	22.4	2.05	.99	1.00	1.00
67°F	700	25.2	1.36	.64	.77	.90	24.2	1.56	.65	.79	.93	23.0	1.79	.66	.81	.95	21.6	2.06	.68	.84	.99
	850	26.2	1.36	.67	.83	.98	25.0	1.56	.69	.85	1.00	23.8	1.79	.71	.88	1.00	22.4	2.05	.72	.91	1.00
	1000	27.0	1.36	.71	.88	1.00	25.8	1.56	.73	.91	1.00	24.4	1.79	.75	.94	1.00	23.0	2.05	.77	.98	1.00
71°F	700	26.6	1.36	.49	.63	.75	25.6	1.56	.49	.64	.77	24.4	1.79	.51	.65	.79	23.0	2.05	.52	.67	.82
	850	27.8	1.35	.51	.67	.81	26.6	1.56	.52	.68	.83	25.2	1.79	.53	.69	.86	23.8	2.05	.55	.72	.89
	1000	28.6	1.35	.54	.71	.87	27.2	1.56	.54	.72	.90	25.8	1.79	.56	.74	.93	24.4	2.05	.58	.77	.96

2.5 TON - LRP13HPK30

Entering Wet Bulb Temperature	Total Air Volume	Outdoor Air Temperature Entering Outdoor Coil																			
		85°F					95°F					105°F					115°F				
		Total Cool Cap.	Comp. Motor Input	Sensible To Total Ratio (S/T) Dry Bulb			Total Cool Cap.	Comp. Motor Input	Sensible To Total Ratio (S/T) Dry Bulb			Total Cool Cap.	Comp. Motor Input	Sensible To Total Ratio (S/T) Dry Bulb			Total Cool Cap.	Comp. Motor Input	Sensible To Total Ratio (S/T) Dry Bulb		
	cfm	kBtuh	kW	75°F	80°F	85°F	kBtuh	kW	75°F	80°F	85°F	kBtuh	kW	75°F	80°F	85°F	kBtuh	kW	75°F	80°F	85°F
59°F	850	28.0	1.76	.96	1.00	1.00	27.0	1.98	.99	1.00	1.00	25.6	2.24	1.00	1.00	1.00	24.6	2.54	1.00	1.00	1.00
	1050	30.0	1.77	1.00	1.00	1.00	28.8	1.99	1.00	1.00	1.00	27.4	2.25	1.00	1.00	1.00	26.2	2.55	1.00	1.00	1.00
	1250	31.4	1.77	1.00	1.00	1.00	30.2	2.00	1.00	1.00	1.00	29.0	2.26	1.00	1.00	1.00	27.4	2.56	1.00	1.00	1.00
63°F	850	28.6	1.76	.79	.94	1.00	27.6	1.99	.82	.96	1.00	26.2	2.25	.84	.99	1.00	24.8	2.54	.86	1.00	1.00
	1050	30.0	1.77	.86	1.00	1.00	28.8	1.99	.88	1.00	1.00	27.4	2.25	.91	1.00	1.00	26.2	2.55	.94	1.00	1.00
	1250	31.4	1.77	.92	1.00	1.00	30.2	2.00	.94	1.00	1.00	29.0	2.26	.98	1.00	1.00	27.4	2.56	1.00	1.00	1.00
67°F	850	30.6	1.77	.65	.78	.91	29.4	2.00	.66	.80	.93	27.8	2.26	.67	.82	.96	26.2	2.55	.69	.84	.99
	1050	32.0	1.78	.69	.84	.99	30.4	2.00	.70	.86	1.00	29.0	2.26	.72	.89	1.00	27.4	2.56	.74	.92	1.00
	1250	32.8	1.78	.73	.90	1.00	31.2	2.01	.75	.93	1.00	29.8	2.27	.77	.96	1.00	28.0	2.56	.80	1.00	1.00
71°F	850	32.6	1.78	.50	.64	.76	31.2	2.01	.51	.65	.78	29.6	2.27	.52	.66	.80	28.0	2.56	.53	.68	.83
	1050	34.0	1.79	.53	.68	.82	32.4	2.01	.54	.70	.85	30.8	2.27	.55	.71	.87	29.0	2.57	.57	.74	.91
	1250	35.0	1.79	.56	.72	.89	33.4	2.02	.57	.75	.92	31.6	2.28	.58	.77	.95	29.8	2.58	.60	.79	.98

3 TON - LRP13HPK36

Entering Wet Bulb Temperature	Total Air Volume	Outdoor Air Temperature Entering Outdoor Coil																			
		85°F					95°F					105°F					115°F				
		Total Cool Cap.	Comp. Motor Input	Sensible To Total Ratio (S/T) Dry Bulb			Total Cool Cap.	Comp. Motor Input	Sensible To Total Ratio (S/T) Dry Bulb			Total Cool Cap.	Comp. Motor Input	Sensible To Total Ratio (S/T) Dry Bulb			Total Cool Cap.	Comp. Motor Input	Sensible To Total Ratio (S/T) Dry Bulb		
	cfm	kBtuh	kW	75°F	80°F	85°F	kBtuh	kW	75°F	80°F	85°F	kBtuh	kW	75°F	80°F	85°F	kBtuh	kW	75°F	80°F	85°F
59°F	1000	33.8	2.13	.95	1.00	1.00	32.6	2.43	.97	1.00	1.00	31.2	2.77	.99	1.00	1.00	29.6	3.16	1.00	1.00	1.00
	1200	35.6	2.14	1.00	1.00	1.00	34.4	2.44	1.00	1.00	1.00	32.8	2.78	1.00	1.00	1.00	31.4	3.17	1.00	1.00	1.00
	1440	37.2	2.15	1.00	1.00	1.00	35.8	2.45	1.00	1.00	1.00	34.4	2.80	1.00	1.00	1.00	32.4	3.18	1.00	1.00	1.00
63°F	1000	35.2	2.14	.78	.91	1.00	33.6	2.44	.80	.94	1.00	31.8	2.78	.81	.97	1.00	30.0	3.17	.84	1.00	1.00
	1200	36.2	2.15	.83	.98	1.00	34.8	2.45	.85	1.00	1.00	33.0	2.79	.87	1.00	1.00	31.4	3.17	.90	1.00	1.00
	1440	37.4	2.15	.88	1.00	1.00	35.8	2.45	.90	1.00	1.00	34.4	2.80	.93	1.00	1.00	32.4	3.18	.96	1.00	1.00
67°F	1000	37.2	2.15	.63	.76	.89	35.6	2.45	.65	.78	.91	34.0	2.79	.66	.80	.93	32.0	3.18	.67	.82	.97
	1200	38.5	2.16	.66	.81	.95	37.0	2.46	.68	.83	.97	35.0	2.80	.70	.85	1.00	33.0	3.18	.72	.88	1.00
	1440	39.5	2.17	.70	.86	1.00	37.8	2.47	.72	.89	1.00	35.8	2.81	.73	.91	1.00	34.0	3.19	.76	.94	1.00
71°F	1000	39.0	2.17	.49	.62	.74	37.6	2.46	.51	.63	.76	36.0	2.81	.51	.65	.78	33.8	3.19	.52	.66	.80
	1200	40.5	2.18	.52	.66	.79	39.0	2.47	.53	.67	.81	37.0	2.81	.54	.69	.83	35.0	3.19	.55	.71	.87
	1440	41.5	2.18	.54	.70	.84	40.0	2.48	.55	.71	.87	38.0	2.82	.56	.73	.90	35.8	3.20	.58	.75	.93

COOLING RATINGS

NOTE − For Temperatures and Capacities not shown in tables, see bulletin − Cooling Unit Rating Table Correction Factor Data in Miscellaneous Engineering Data section.

3.5 TON - LRP13HPK42

Entering Wet Bulb Temperature	Total Air Volume	Outdoor Air Temperature Entering Outdoor Coil																			
		85°F					95°F					105°F					115°F				
		Total Cool Cap.	Comp. Motor Input	Sensible To Total Ratio (S/T) Dry Bulb			Total Cool Cap.	Comp. Motor Input	Sensible To Total Ratio (S/T) Dry Bulb			Total Cool Cap.	Comp. Motor Input	Sensible To Total Ratio (S/T) Dry Bulb			Total Cool Cap.	Comp. Motor Input	Sensible To Total Ratio (S/T) Dry Bulb		
	cfm	kBtuh	kW	75°F	80°F	85°F	kBtuh	kW	75°F	80°F	85°F	kBtuh	kW	75°F	80°F	85°F	kBtuh	kW	75°F	80°F	85°F
59°F	1100	38.5	2.41	.92	1.00	1.00	37.0	2.72	.94	1.00	1.00	35.6	3.05	.96	1.00	1.00	33.8	3.42	.99	1.00	1.00
	1400	41.5	2.39	.99	1.00	1.00	40.0	2.70	1.00	1.00	1.00	38.5	3.03	1.00	1.00	1.00	36.4	3.41	1.00	1.00	1.00
	1700	44.5	2.36	1.00	1.00	1.00	42.5	2.68	1.00	1.00	1.00	40.5	3.02	1.00	1.00	1.00	38.5	3.41	1.00	1.00	1.00
63°F	1100	40.0	2.40	.76	.89	1.00	38.0	2.71	.78	.91	1.00	36.4	3.04	.79	.94	1.00	34.6	3.42	.81	.96	1.00
	1400	42.5	2.38	.82	.97	1.00	40.5	2.69	.84	.99	1.00	38.0	3.04	.86	1.00	1.00	36.4	3.41	.89	1.00	1.00
	1700	44.0	2.36	.88	1.00	1.00	42.5	2.68	.91	1.00	1.00	40.5	3.02	.94	1.00	1.00	38.5	3.41	.97	1.00	1.00
67°F	1100	42.5	2.38	.61	.74	.86	40.5	2.69	.63	.76	.88	38.5	3.03	.64	.77	.91	36.6	3.41	.65	.79	.93
	1400	45.0	2.36	.65	.80	.95	42.5	2.67	.67	.82	.97	40.5	3.02	.68	.85	.99	38.5	3.41	.70	.87	1.00
	1700	46.5	2.34	.69	.86	1.00	44.0	2.66	.71	.89	1.00	42.0	3.00	.73	.92	1.00	39.5	3.40	.75	.96	1.00
71°F	1100	45.0	2.35	.48	.60	.72	43.0	2.67	.48	.61	.73	41.0	3.01	.49	.63	.75	39.0	3.41	.50	.64	.77
	1400	47.0	2.33	.49	.64	.78	45.0	2.64	.51	.66	.80	42.5	3.00	.52	.68	.83	40.5	3.39	.52	.69	.86
	1700	48.5	2.31	.52	.68	.84	46.5	2.63	.53	.70	.87	44.5	2.98	.53	.73	.90	41.5	3.38	.55	.75	.93

4 TON - LRP13HPK48

Entering Wet Bulb Temperature	Total Air Volume	Outdoor Air Temperature Entering Outdoor Coil																			
		85°F					95°F					105°F					115°F				
		Total Cool Cap.	Comp. Motor Input	Sensible To Total Ratio (S/T) Dry Bulb			Total Cool Cap.	Comp. Motor Input	Sensible To Total Ratio (S/T) Dry Bulb			Total Cool Cap.	Comp. Motor Input	Sensible To Total Ratio (S/T) Dry Bulb			Total Cool Cap.	Comp. Motor Input	Sensible To Total Ratio (S/T) Dry Bulb		
	cfm	kBtuh	kW	75°F	80°F	85°F	kBtuh	kW	75°F	80°F	85°F	kBtuh	kW	75°F	80°F	85°F	kBtuh	kW	75°F	80°F	85°F
59°F	1300	44.0	2.72	.95	1.00	1.00	42.0	3090	.97	1.00	1.00	40.5	3510	1.00	1.00	1.00	38.5	3980	1.00	1.00	1.00
	1650	47.5	2.73	1.00	1.00	1.00	45.5	3100	1.00	1.00	1.00	43.5	3520	1.00	1.00	1.00	41.5	3990	1.00	1.00	1.00
	2000	50.0	2.73	1.00	1.00	1.00	48.0	3110	1.00	1.00	1.00	46.0	3530	1.00	1.00	1.00	43.5	4000	1.00	1.00	1.00
63°F	1300	45.0	2.72	.78	.92	1.00	43.5	3090	.80	.94	1.00	41.5	3510	.82	.97	1.00	39.0	3980	.84	1.00	1.00
	1650	47.5	2.73	.85	1.00	1.00	45.5	3100	.87	1.00	1.00	43.5	3520	.89	1.00	1.00	41.5	3990	.93	1.00	1.00
	2000	50.0	2.73	.92	1.00	1.00	48.0	3110	.94	1.00	1.00	46.0	3530	.97	1.00	1.00	43.5	4000	1.00	1.00	1.00
67°F	1300	48.0	2.73	.62	.76	.89	46.0	3100	.64	.78	.91	43.5	3520	.65	.80	.94	41.0	3990	.66	.82	.97
	1650	50.5	2.73	.67	.83	.98	48.0	3110	.69	.85	1.00	45.5	3530	.70	.88	1.00	43.0	4000	.72	.91	1.00
	2000	52.0	2.74	.72	.90	1.00	49.5	3110	.74	.93	1.00	47.0	3540	.76	.96	1.00	44.5	4010	.78	.99	1.00
71°F	1300	50.5	2.73	.48	.61	.74	48.5	3110	.48	.63	.76	46.0	3530	.49	.64	.77	43.5	4000	.51	.66	.80
	1650	53.5	2.74	.50	.66	.81	51.0	3110	.51	.68	.83	48.0	3540	.52	.70	.86	45.5	4010	.54	.72	.89
	2000	55.0	2.74	.53	.72	.88	52.5	3120	.54	.73	.91	49.5	3550	.56	.75	.95	47.0	4020	.57	.78	.98

5 TON - LRP13HPK060

Entering Wet Bulb Temperature	Total Air Volume	Outdoor Air Temperature Entering Outdoor Coil																			
		85°F					95°F					105°F					115°F				
		Total Cool Cap.	Comp. Motor Input	Sensible To Total Ratio (S/T) Dry Bulb			Total Cool Cap.	Comp. Motor Input	Sensible To Total Ratio (S/T) Dry Bulb			Total Cool Cap.	Comp. Motor Input	Sensible To Total Ratio (S/T) Dry Bulb			Total Cool Cap.	Comp. Motor Input	Sensible To Total Ratio (S/T) Dry Bulb		
	cfm	kBtuh	kW	75°F	80°F	85°F	kBtuh	kW	75°F	80°F	85°F	kBtuh	kW	75°F	80°F	85°F	kBtuh	kW	75°F	80°F	85°F
59°F	1450	53.0	3.47	.91	1.00	1.00	51.0	3.97	.93	1.00	1.00	49.0	4.54	.95	1.00	1.00	46.5	5.18	.98	1.00	1.00
	1830	57.0	3.49	.99	1.00	1.00	55.0	4.00	1.00	1.00	1.00	53.0	4.57	1.00	1.00	1.00	50.0	5.22	1.00	1.00	1.00
	2200	60.5	3.52	1.00	1.00	1.00	58.0	4.02	1.00	1.00	1.00	55.5	4.60	1.00	1.00	1.00	53.0	5.24	1.00	1.00	1.00
63°F	1450	55.5	3.48	.75	.88	1.00	53.0	3.98	.76	.90	1.00	50.5	4.55	.78	.92	1.00	48.0	5.20	.81	.95	1.00
	1830	58.5	3.51	.81	.96	1.00	56.0	4.01	.83	.98	1.00	53.0	4.57	.85	1.00	1.00	50.0	5.22	.88	1.00	1.00
	2200	60.5	3.52	.87	1.00	1.00	58.0	4.02	.89	1.00	1.00	55.5	4.60	.92	1.00	1.00	53.0	5.24	.95	1.00	1.00
67°F	1450	59.0	3.51	.60	.73	.85	56.0	4.01	.62	.75	.87	53.5	4.58	.63	.76	.90	50.5	5.22	.64	.79	.92
	1830	61.5	3.53	.65	.79	.93	59.0	4.03	.66	.81	.96	56.5	4.60	.67	.83	.98	53.0	5.24	.69	.86	1.00
	2200	64.0	3.55	.69	.85	1.00	61.0	4.05	.70	.87	1.00	58.0	4.62	.72	.90	1.00	54.0	5.26	.74	.94	1.00
71°F	1450	62.0	3.53	.47	.59	.71	59.5	4.04	.47	.61	.72	56.5	4.61	.48	.62	.74	53.5	5.25	.50	.63	.77
	1830	65.5	3.56	.49	.64	.77	62.5	4.07	.49	.65	.79	59.0	4.64	.51	.67	.82	56.0	5.28	.52	.68	.84
	2200	67.5	3.58	.51	.68	.83	64.0	4.09	.52	.70	.86	61.0	4.66	.54	.71	.88	57.5	5.30	.55	.74	.92

HEATING RATINGS

Model	Outdoor Temp - DB/WB ºF											
	0/0		5/4		17/15		35/33		47/43		62/56	
	Btuh	kW	Btuh	kW	Btuh	kW	Btuh	kW	Btuh	kW	Btuh	kW
LRP13HPK24	7,500	2.20	8,900	2.61	12,300	3.60	18,500	5.42	22,700	6.65	27,900	8.18
LRP13HPK30	9,100	2.67	11,000	3.22	15,400	4.51	22,200	6.51	26,800	7.85	32,400	9.50
LRP13HPK36	11,600	3.40	13,900	4.07	19,300	5.66	28,100	8.24	33,900	9.94	41,200	12.07
LRP13HPK42	16,500	4.84	19,000	5.57	25,100	7.36	35,000	10.26	41,700	12.22	50,000	14.65
LRP13HPJ48	14,000	4.10	17,500	5.13	25,700	7.53	39,100	11.46	48,000	14.07	59,100	17.32
LRP13HPK60	23,400	6.86	26,800	7.85	34,900	10.23	49,400	14.48	59,100	17.32	71,100	20.84

NOTE - Values based on 0.50 in. w.g. external static pressure.

ELECTRIC HEAT DATA

Model			LRP13HPK24		LRP13HPK30		LRP13HPK36	
Voltage			208V	240V	208V	240V	208V	240V
[1] Maximum Overcurrent Protection (MOCP)	5 kW	Circuit 1	30.0	30	30	35	30	30
	7.5 kW	Circuit 1	40.0	45	40	45	40	45
	10 kW	Circuit 1	50.0	60	60	60	50	60
	15 kW	Circuit 1	- - -	- - -	- - -	- - -	50	60
		Circuit 2	- - -	- - -	- - -	- - -	25	30
[2] Minimum Circuit Ampacity (MCA)	5 kW	Circuit 1	26.1	29.5	27.7	31.2	26.3	29.8
	7.5 kW	Circuit 1	37.4	42.6	39	44.2	37.6	42.8
	10 kW	Circuit 1	48.6	55.6	50.3	57.2	48.9	55.8
	15 kW	Circuit 1	- - -	- - -	- - -	- - -	48.9	55.8
		Circuit 2	- - -	- - -	- - -	- - -	22.6	26
[1] Maximum Overcurrent Protection (MOCP) with Optional Single Point Power Supply		5 kW	40	45	50	50	50	60
		7.5 kW	60	60	60	70	60	70
		10 kW	70	70	70	80	70	80
		15 kW	- - -	- - -	- - -	- - -	100	110
[2] Minimum Circuit Ampacity (MCA) with Optional Single Point Power Supply		5 kW	40.0	43.5	43.5	47	47.4	50.8
		7.5 kW	51.3	56.5	54.8	60	58.7	63.9
		10 kW	62.6	69.5	66.1	73	69.9	76.9
		15 kW	- - -	- - -	- - -	- - -	92.5	102.9
		Model No.	LRP13HPK42		LRP13HPK48		LRP13HPK60	
		Voltage	208V	240V	208V	240V	208V	240V
[1] Maximum Overcurrent Protection (MOCP)	5 kW	Circuit 1	35	35	35	35	30	35
	7.5 kW	Circuit 1	45	50	45	50	40	45
	10 kW	Circuit 1	60	60	60	60	60	60
	15 kW	Circuit 1	60	60	60	60	60	60
		Circuit 2	25	30	25	30	25	30
	20 kW	Circuit 1	60	60	60	60	60	60
		Circuit 2	50	60	50	60	50	60
[2] Minimum Circuit Ampacity (MCA)	5 kW	Circuit 1	30.1	33.5	30.1	33.5	27.4	30.9
	7.5 kW	Circuit 1	41.4	46.6	41.4	46.6	38.7	43.9
	10 kW	Circuit 1	52.6	59.6	52.6	59.6	50.0	57
	15 kW	Circuit 1	52.6	59.6	52.6	59.6	50	57
		Circuit 2	22.6	26	22.6	26.0	50	22.6
	20 kW	Circuit 1	50.6	59.6	52.6	59.6	53	57
		Circuit 2	45.1	52.1	45.1	52.1	45.1	52.1
[1] Maximum Overcurrent Protection (MOCP) with Optional Single Point Power Supply		5 kW	60	60	60	70	80	80
		7.5 kW	70	70	70	80	90	90
		10 kW	80	80	80	90	90	100
		15 kW	100	110	100	125	110	125
		20 kW	125	150	125	150	150	150
[2] Minimum Circuit Ampacity (MCA) with Optional Single Point Power Supply		5 kW	50.5	53.9	54.6	58.1	60.1	63.6
		7.5 kW	61.7	67.0	65.9	71.1	71.4	76.6
		10 kW	73.0	80.0	77.2	84.1	82.7	89.6
		15 kW	95.6	106.0	99.8	110.2	105.3	115.7
		20 kW	118.2	132.1	122.3	136.2	127.8	141.7

NOTE - All units have a minimum Short Circuit Current Rating (SCCR) of 5000 amps.

NOTE - Circuit 1 Minimum Circuit Ampacity includes the Blower Motor Full Load Amps.

NOTE- Extremes of operating range are plus and minus 10% of line voltage.

[1] HACR type breaker or fuse.

[2] Refer to National or Canadian Electrical Code manual to determine wire, fuse and disconnect size requirements.

ELECTRIC HEAT CAPACITIES

Input Voltage	5 kW			7.5 kW			10 kW			15 kW			20 kW		
	No of Steps	kW Input	KBtuh Output	No of Steps	kW Input	KBtuh Output	No of Steps	kW Input	KBtuh Output	No of Steps	kW Input	KBtuh Output	No of Steps	kW Input	KBtuh Output
208	1	3.8	12.8	1	5.6	19.2	1	7.5	25.6	1	11.2	38.2	1	15	51.2
220	1	4.2	14.3	1	6.3	21.5	1	8.4	28.7	1	12.6	43	1	16.8	57.3
230	1	4.6	15.7	1	6.9	23.5	1	9.2	31.3	1	13.8	47	1	18.4	62.7
240	1	5	17.1	1	7.5	25.6	1	10	34.1	1	15	51.2	1	20	68.2

FIELD WIRING

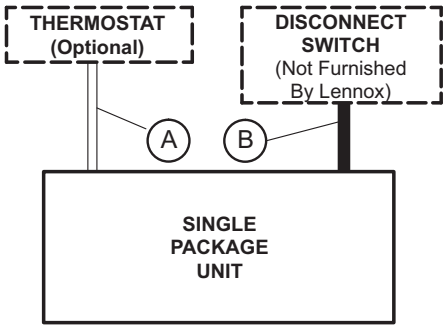

A − Five Wire Low Voltage (Electronic)
B − Two Wire Power (See Electrical Data Table)

If multiple disconnects are used on units with electric heat; there must be two−wire power provided for each disconnect

− Field Wiring Not Furnished −

INSTALLATION CLEARANCES

	in.	mm
Front (heat exchanger access)	24	610
Right Side (blower access)	24	610
Left Side (evaporator coil access)	24	610
Back	0	0
Top	48	1219

BLOWER DATA

Model	Blower Tap	Air Volume (cfm) at Various External Static Pressures - in. w.g.									
		0.1	0.2	0.3	0.4	0.5	0.6	0.7	0.8	0.9	1.0
LRP13HPK24	Tap 1 (Fan Only)	680	590	550	450	380	- - -	- - -	- - -	- - -	- - -
	Tap 2 (Low Cooling)	890	830	800	760	710	680	640	600	- - -	- - -
	Tap 3 (High Cooling)	1000	965	930	900	870	835	805	770	740	695
LRP13HPK30	Tap 1 (Fan Only)	680	640	600	570	530	490	- - -	- - -	- - -	- - -
	Tap 2 (Low Cooling)	1100	1070	1050	1020	990	960	930	900	- - -	- - -
	Tap 3 (High Cooling)	1195	1160	1130	1110	1070	1040	1005	970	935	875
LRP13HPK36	Tap 1 (Fan Only)	860	810	760	710	640	590	550	490	- - -	- - -
	Tap 2 (Low Cooling)	1300	1265	1235	1200	1165	1125	1085	1040	1000	885
	Tap 3 (High Cooling)	1450	1425	1395	1350	1320	1285	1250	1165	1045	860
LRP13HPK42	Tap 1 (Fan Only)	800	720	640	550	475	390	310	- - -	- - -	- - -
	Tap 2 (Low Cooling)	1470	1410	1360	1300	1260	1210	1155	1095	1000	940
	Tap 3 (High Cooling)	1580	1540	1505	1460	1415	1370	1320	1235	1135	1060
LRP13HPK48	Tap 1 (Fan Only)	1145	1075	1000	930	850	790	740	670	570	490
	Tap 2 (Low Cooling)	1675	1630	1600	1540	1490	1440	1390	1300	1230	1125
	Tap 3 (High Cooling)	1840	1800	1760	1720	1670	1615	1555	1500	- - -	- - -
LRP13HPK60	Tap 1 (Fan Only)	1400	1320	1260	1200	1120	1060	980	900	- - -	- - -
	Tap 2 (Low Cooling)	1920	1870	1820	1770	1720	1670	1450	1360	- - -	- - -
	Tap 3 (High Cooling)	1970	1915	1865	1820	1770	1725	1685	1640	1595	1540

NOTE - All air data is measured external to unit with dry coil and without air filters.

ACCESSORY AIR RESISTANCE DATA - in. w.g.

Air Volume cfm	Rectangular to Round Duct Adaptor Kits					
	Downflow		Horizontal			
	14 in. Diameter		14 in. Diameter		16 in. Diameter	18 in. Diameter
	24, 30, 36	42, 48, 60	24, 30, 36	42, 48, 60	42, 48, 60	42, 48, 60
500	0.03	- - -	0.04	- - -	- - -	- - -
600	0.05	- - -	0.07	- - -	- - -	- - -
700	0.08	0.13	0.08	0.13	- - -	- - -
800	0.10	0.17	0.12	0.16	- - -	- - -
900	0.12	0.21	0.15	0.21	- - -	- - -
1000	0.17	0.24	0.19	0.25	0.11	0.03
1100	0.18	0.30	0.23	0.30	0.11	0.03
1200	0.20	0.36	0.29	0.37	0.13	0.03
1300	0.26	0.43	0.31	0.43	0.17	0.03
1400	0.31	0.50	0.39	0.51	0.20	0.03
1500	- - -	0.57	- - -	0.57	0.21	0.05
1600	- - -	0.63	- - -	0.65	0.26	0.05
1700	- - -	0.71	- - -	0.72	0.30	0.06
1800	- - -	0.80	- - -	0.81	0.30	0.06
1900	- - -	0.91	- - -	0.90	0.40	0.06
2000	- - -	0.99	- - -	1.01	0.41	0.06

DIMENSIONS UNIT

Size	CORNER WEIGHTS								CENTER OF GRAVITY			
	AA		BB		CC		DD		EE		FF	
	lbs.	kg	lbs.	kg	lbs.	kg	lbs.	kg	in.	mm	in.	mm
24	87	39	96	44	105	48	95	43	21	533	21-1/2	546
30	89	40	99	45	97	44	107	49	21	533	21-1/2	546
36	91	41	101	46	110	50	100	45	21	533	21-1/2	546
42	116	53	126	57	137	62	126	57	25-1/4	641	21-1/2	546
48	117	53	128	58	138	63	127	58	25-1/4	641	21-1/2	546
60	122	55	133	60	144	65	133	60	25-/14	641	21-1/2	546

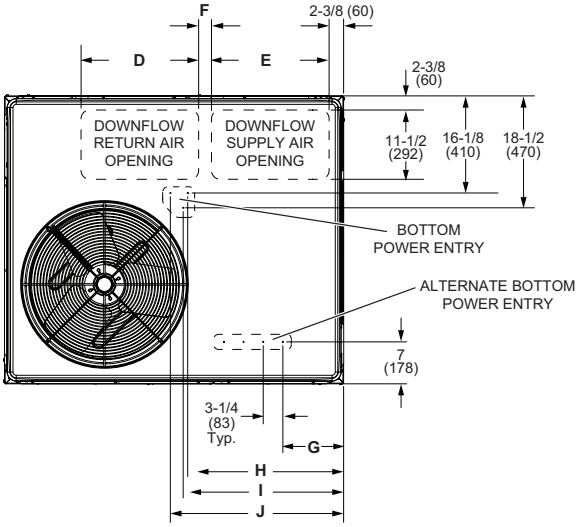

TOP VIEW (Base)

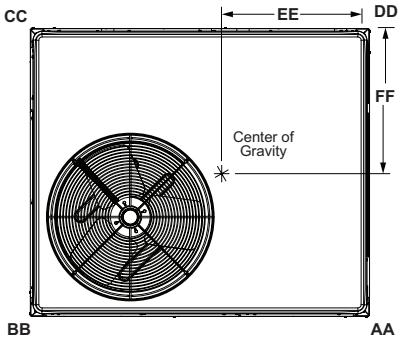

TOP VIEW
(Corner Weight and Center of Gravity)

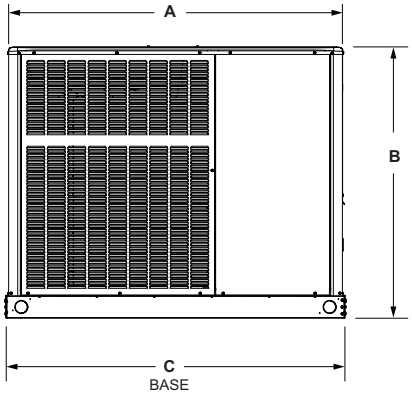

FRONT VIEW

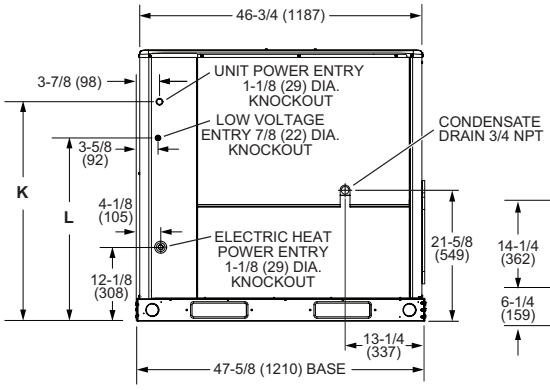

RIGHT SIDE VIEW

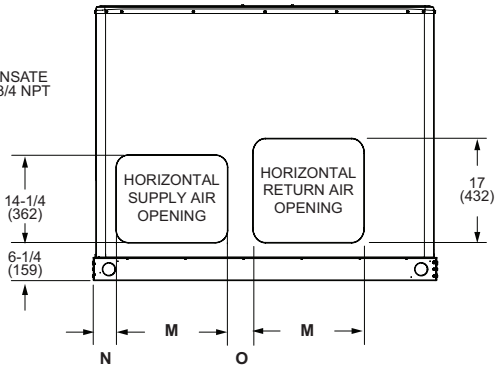

BACK VIEW

Size	A		B		C		D		E		F		G		H	
	in.	mm	in.	mm	in.	mm	in.	mm	in.	mm	in.	mm	in.	mm	in.	mm
24, 30, 36	47-5/8	1210	40-7/8	1038	47-5/8	1210	16-3/4	425	14	356	2	51	4-1/2	114	20-1/4	514
42, 48, 60	55-1/4	1403	44-7/8	1140	56-1/8	1426	19-1/2	495	19-1/2	495	2-1/8	54	10	254	25-7/8	657

Size	I		J		K		L		M		N		O	
	in.	mm	in.	mm	in.	mm	in.	mm	in.	mm	in.	mm	in.	mm
24, 30, 36	21	533	23-1/4	591	32-1/4	819	26-1/4	667	13-1/2	343	3-1/8	79	5-7/8	149
42, 48, 60	26-1/2	673	26-3/4	679	36-1/4	921	30-1/4	768	18-1/4	463	3-3/4	95	4-3/8	111

CLIP CURB

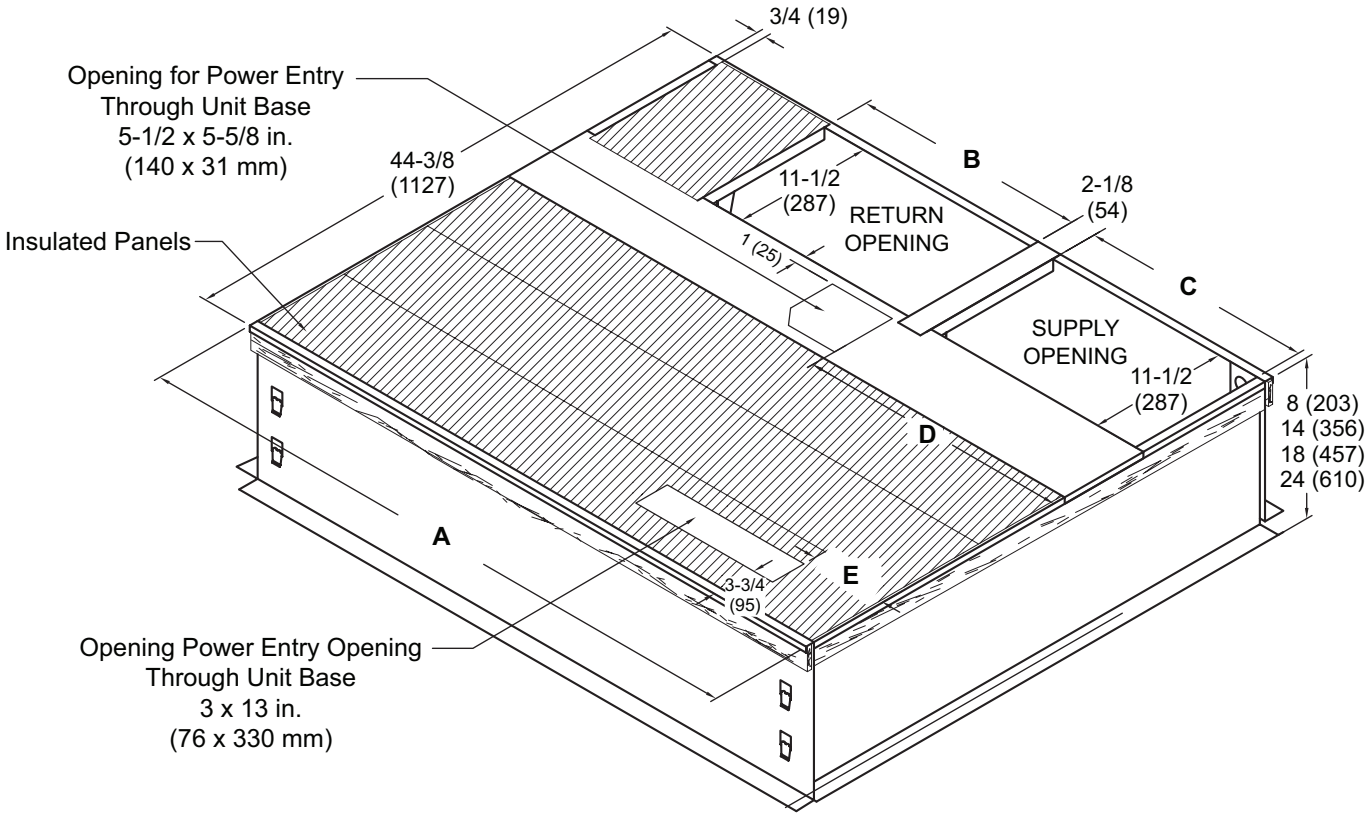

NOTE - Roof deck may be omitted within confines of curb.

TYPICAL FLASHING DETAIL FOR ROOF CURB

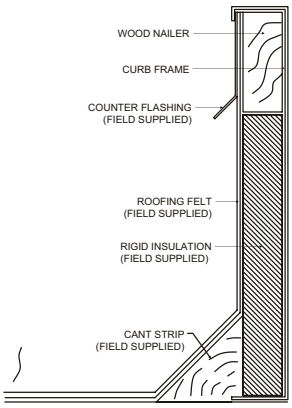

DETAIL ROOF CURB

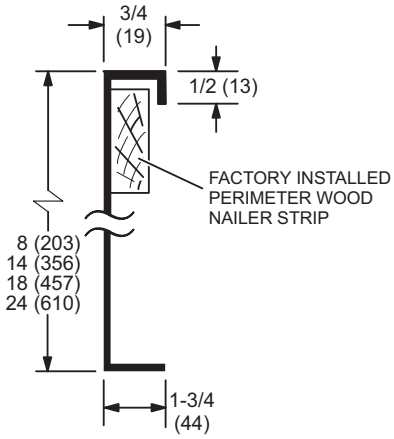

Usage	A		B		C		D		E	
	in.	mm	in.	mm	in.	mm	in.	mm	in.	mm
24, 30, 36	44-3/8	1127	16-7/8	429	13-7/8	352	17-1/4	438	1-1/4	32
42, 48, 60	52-7/8	1343	19-1/2	380	19-1/2	352	23-1/8	587	7	178

ADJUSTABLE PITCH ROOF WELDED CURB

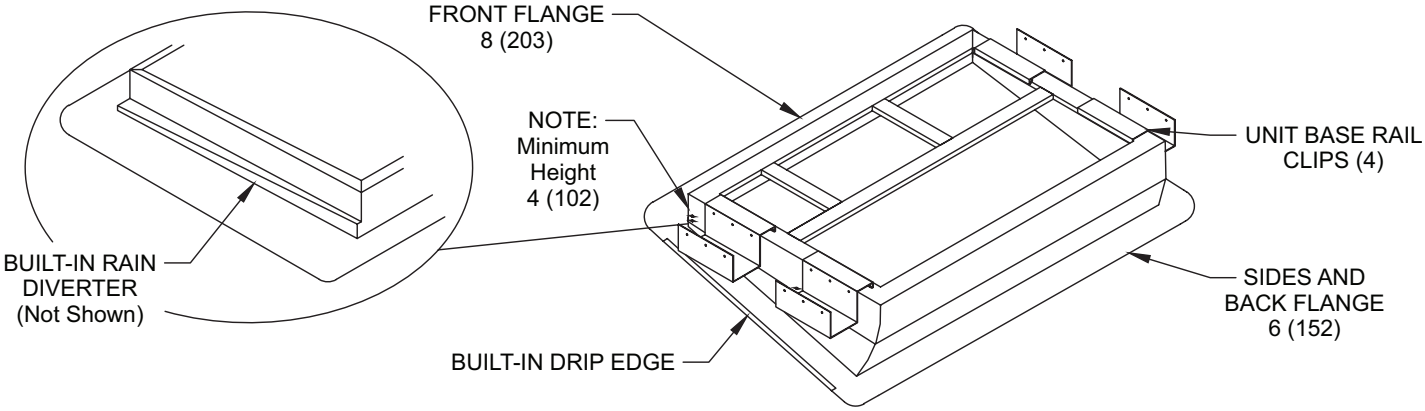

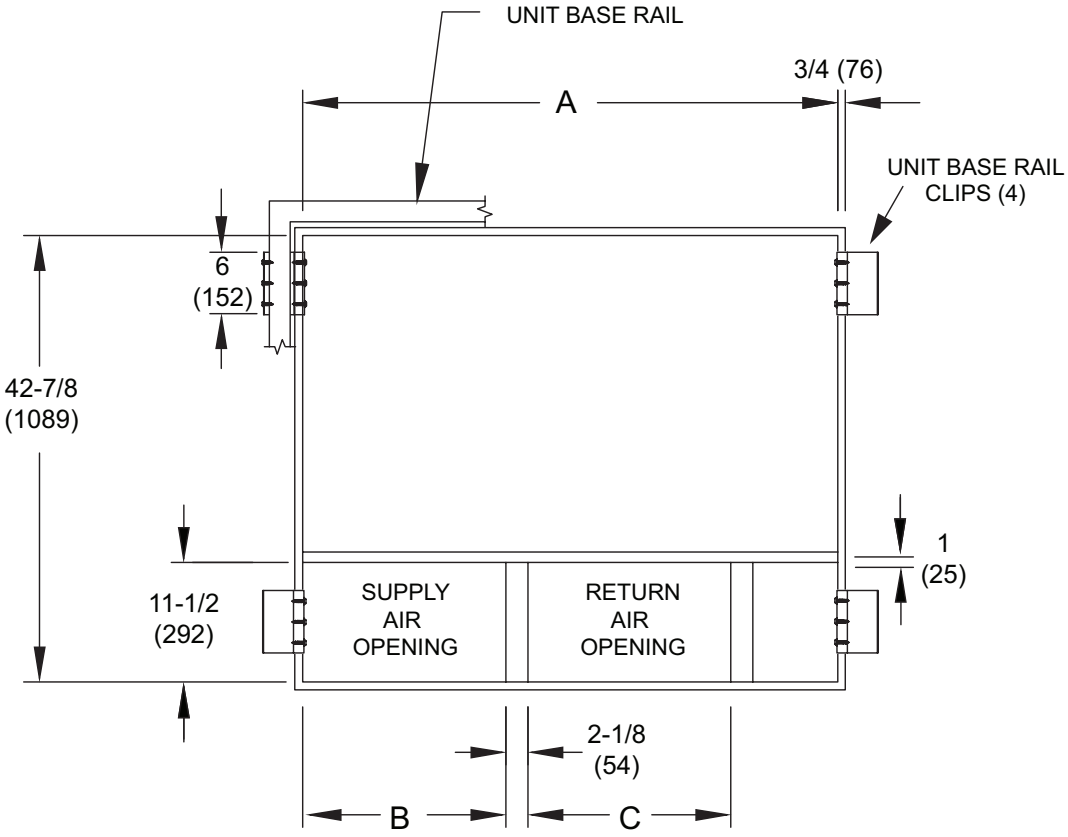

Usage	A		B		C	
	in.	mm	in.	mm	in.	mm
24, 30, 36	42-7/8	1089	13-7/8	352	16-7/8	429
42, 48, 60	51-3/8	1305	19-1/2	495	19-1/2	495

ADJUSTABLE PITCH ROOF CLIP CURB

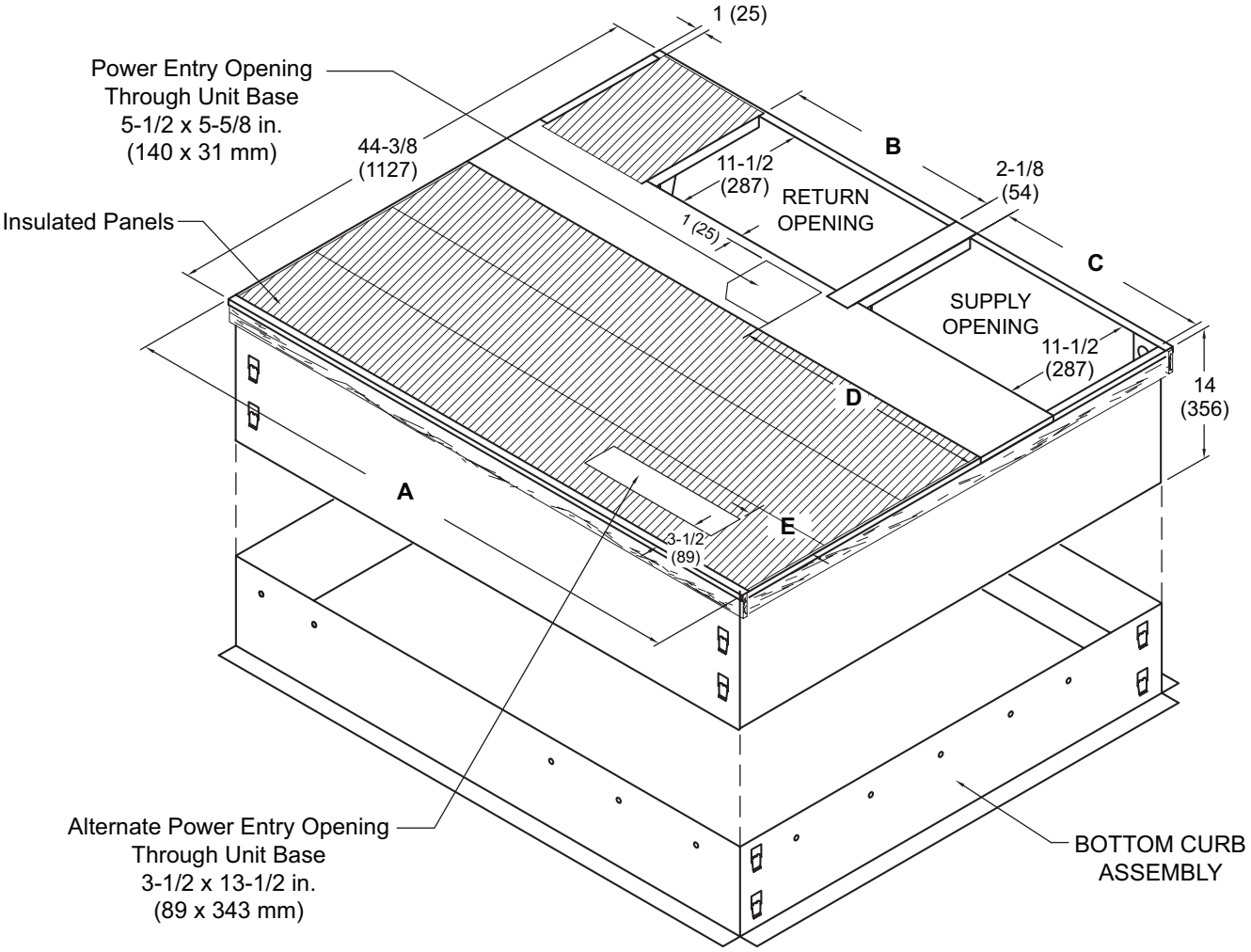

NOTE - Roof deck may be omitted within confines of curb.

TYPICAL FLASHING DETAIL FOR ROOF CURB

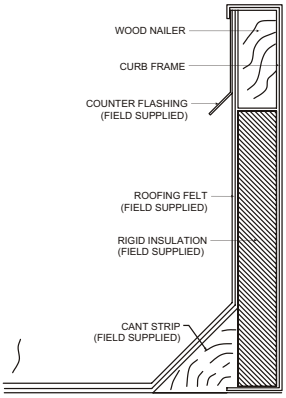

DETAIL ROOF CURB

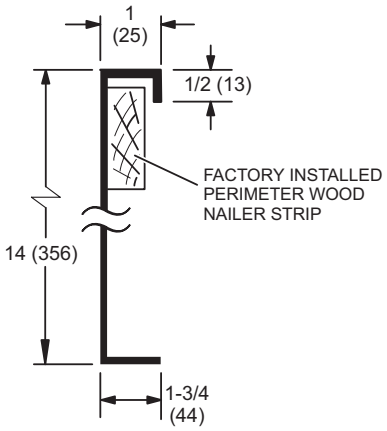

Usage	A		B		C		D		E	
	in.	mm	in.	mm	in.	mm	in.	mm	in.	mm
24, 30, 36	44-3/8	1127	16-7/8	429	13-7/8	352	17-1/4	438	1-1/4	32
42, 48, 60	52-7/8	1343	19-1/2	380	19-1/2	352	23-1/8	587	7	178

REVISIONS

Sections	Description of Change
Control Options	Updated to reflect latest product offering.
Dimensions	Updated dimension table.

Visit us at www.Lennox.com
For the latest technical information, www.LennoxPros.com
Contact us at 1-800-4-LENNOX

NOTE - Due to Lennox' ongoing commitment to quality, Specifications, Ratings and Dimensions subject to change without notice and without incurring liability.
Improper installation, adjustment, alteration, service or maintenance can cause property damage or personal injury.
Installation and service must be performed by a qualified installer and servicing agency.

©2026 Lennox Industries, Inc.