GAS FURNACES

ML193DFE

MERIT® SERIES

Downflow - High Efficiency Blower

RESIDENTIAL PRODUCT SPECIFICATIONS

Bulletin No. 210868
July 2026
Supersedes all previous versions

MERIT® SERIES

AFUE - 93%
Input - 44,000 to 88,000 Btuh
Nominal Add-on Cooling - 1.5 to 4 Tons

MODEL NUMBER IDENTIFICATION

ML 1 93 DF 070 X E 36 B

Unit Type
ML = Merit® Series

Stages
1 = One-Stage

AFUE
93 = 93%

Configuration
DF = Downflow

Nominal Gas Heat Input
045 = 44,000 Btuh
070 = 66,000 Btuh
090 = 88,000 Btuh

Low NO_x
X = Units meet California Nitrogen Oxides Standard (40 ng/J)

Blower
E = High Efficiency Constant Torque Blower Motor

Nominal Add-On Cooling Capacity
36 = 1.5 - 3 tons
48 = 2.5 - 4 tons

[1] **Cabinet Width**
B = 17-1/2 in.
C = 21 in.

[1] Downflow indoor coils with the same letter designation will physically match the furnace **supply air opening**.

FEATURE HIGHLIGHTS

1. Lennox Duralok Plus™ Heat Exchanger
2. Secondary Heat Exchanger
3. Inshot Burners
4. Gas Control Valve
5. Combustion Air Inducer
6. SureLight® Integrated Furnace Control
7. Power Saver™ Constant Torque Blower
8. Insulated Cabinet
9. Safety Interlock Switch
10. Gas Piping And Electrical Inlets

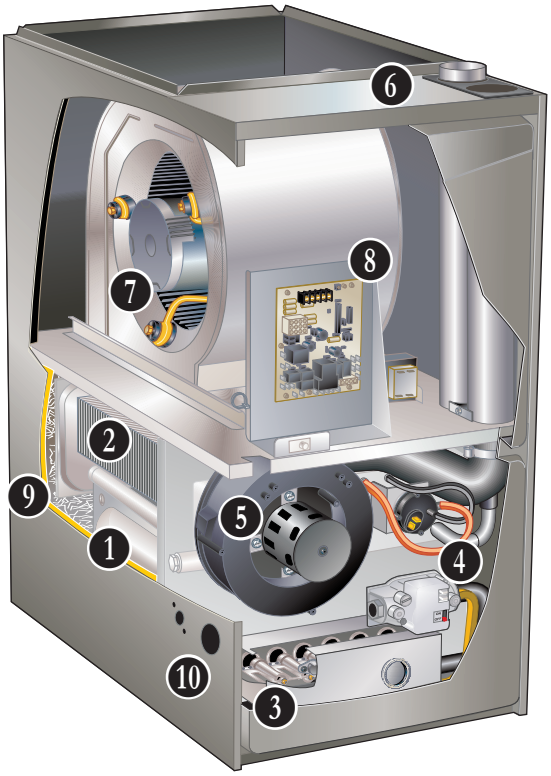

CONTENTS

Approvals And Warranty . . . 3
Blower Data . . . 19
Dimensions - Furnace/Coil Combined Dimensions . . . 15
Dimensions - Optional Accessories . . . 14
Dimensions - Optional Accessories - Venting . . . 16
Dimensions - Unit . . . 13
Features . . . 3
Gas Heat Accessories . . . 10
High Altitude Derate . . . 10
Installation Clearances . . . 8
Optional Accessories . . . 9
Specifications . . . 8
Vent Lengths . . . 11
Vent Lengths - Uninsulated Exhaust Pipe In Unconditioned Space . . . 10

APPROVALS AND WARRANTY

APPROVALS

- AHRI Certified
- Tested and rated according to US DOE test procedures and FTC labeling regulations
- ISO 9001 Registered Manufacturing Quality System
- Blower data from unit tests conducted in Lennox Laboratory air test chamber

NOTE - This furnace has not been CSA International design certified for installation in mobile homes, recreational vehicles, or outdoors.

California Only

- These furnaces **do not meet** the South Coast Air Quality Management District (SCAQMD) Rule 1111 and San Joaquin Valley Air Pollution Control District (SJVAPCD) Rule 4905 NOx emission limit (14 ng/J) and cannot be installed within the SCAQMD, SJVAPCD and Bay Area
- These furnaces are approved by the California Energy Commission and meets California Nitrogen Oxides Standard (NOx) limits of 40 ng/J

WARRANTY

- Duralok Plus™ Aluminized Steel Heat Exchanger:
  - Limited twenty year in residential applications
  - Limited ten years in non-residential applications
- All other covered components:
  - Limited five years in residential installations
  - Limited one year in non-residential installations

NOTE - Refer to Lennox® Basic Limited Warranty at www.Lennox.com for additional details.

FEATURES

APPLICATIONS

- Input capacities of 44,000, 66,000 and 88,000 Btuh.
- Energy efficiency (AFUE) 93%.
- Lennox add-on indoor coils, high-efficiency air cleaners and humidifiers can easily be added to furnace.
- Shipped factory assembled with controls installed and wired.
- Each unit factory test operated to ensure proper operation.

HEATING SYSTEM

1 Lennox Duralok Plus™ Heat Exchanger Assembly

- Lennox developed heat exchanger assembly consists of primary heat exchanger and secondary condenser coil assembly.
- Main multi-pass crimped seam design clamshell type heat exchanger.
- Constructed of heavy-gauge, aluminized steel.
- Designed for normal expansion and contraction with maximum efficiency and minimum resistance to air flow.
- 2 Secondary heat exchanger condenser coil constructed of aluminum fins fitted to stainless steel tubes.
- Coil is factory tested for leaks.
- Condensate drain header box assembly located on front of coil.
- Compact size of complete heat exchanger assembly permits low overall design of furnace cabinet.
- Heat exchanger assembly has been laboratory life cycle tested in excess of industry standards.

Lennox Designed Header Box

- Header box on end of condenser coil collects flue condensate for disposal through condensate drains.
- The drains are located on each side of the cabinet for easy field installation of condensate drain trap.
- Only one drain is used, the other drain is sealed.
- Condensate drain trap is included with unit for field installation.

HEATING SYSTEM (continued)

Lennox Designed Flue Condensate Trap Assembly
- Field installed outside the conditioned air stream
- Assembly can be mounted on either side of cabinet in upflow applications
- Assembly is mounted below the cabinet in horizontal applications
- Can also be mounted remotely (up to 5 ft. away) from unit
- See Dimension Drawing and Installation Instructions
- 90° street elbow furnished for ease of drain trap installation
- Drain connection can be made with field provided PVC pipe or PVC coupling
- Drain cap on trap allows easy cleaning and winterizing

3 Inshot Burners
- Aluminized steel inshot burners provide efficient, trouble-free operation
- Burner venturi mixes air and gas in correct proportion for proper combustion
- Burner assembly can be removed from the unit as a single component for ease of service

SureLight® Hot Surface Ignitor
- Tough, reliable, long-life, trouble-free performance
- Silicon nitride ignitor
- Cemented to steatite block for protection against current leakage
- Ignition leads are constructed of nickel plated copper and are enclosed in high temperature Teflon® insulation for dependable operation

4 Gas Control Valve
- 24 volt redundant combination gas control valve combines manual shut off switch (On-Off), automatic electric valve (dual) and gas pressure regulation into a compact combination control

Flame Rollout Switches (2)
- Factory installed on the front of the burner box
- Switch provides protection from abnormal operating conditions
- Manual reset

Limit Control
- Automatic reset, primary limit is accurately located on header box on all units

5 Combustion Air Inducer
- Shaded pole heavy duty blower prepurges heat exchanger and safely vents flue products
- Operates only during heating cycle

Pressure Switch
- Proves Combustion Air Inducer operation before allowing gas valve to open

Optional Accessories

High Altitude Orifice Kits
- Required on all units for proper operation at altitudes from 7501 to 10,000 ft.
- Kits are available for natural gas and LPG/propane

High Altitude Pressure Switch Kit
- Required for proper unit operation on installations above 4500 ft.

Natural Gas to LPG/Propane Conversion Kit
- Required for field changeover from natural gas to LPG/Propane

LPG/Propane to Natural Gas Conversion Kit
- Required for field changeover from LPG/Propane to natural gas

Muffler (US Only)
- Significantly reduces outdoor operating sound levels
- Two-inch diameter muffler is optional for all models
- Installed vertically in the exhaust piping
- See Optional Accessory Dimension Drawing

DIRECT VENT / NON-DIRECT VENT SEALED COMBUSTION SYSTEM

- Furnace features a “sealed combustion” system and can be installed in either Direct Vent or Non-Direct applications
- In Direct Vent applications, combustion air is supplied from outdoors and flue gases are discharged outdoors
- In Non-Direct Vent applications, combustion air is supplied from indoors and flue gases are discharged outdoors

NOTE - Lennox has approved the use of DuraVent® PolyPro® and Centrotherm InnoFlue® manufactured vent pipe and terminations as an alternative to PVC vent pipe. Must be ordered separately.
Tested and listed to the ULC S636 standard in Canada.

- The polypropylene venting system must follow the uninsulated and unconditioned space vent lengths listed in the table on 11
- Refer to the Installation Instructions for additional details

DIRECT VENT / NON-DIRECT VENT SEALED COMBUSTION SYSTEM (continued)

Flue Coupling
- Assists with exhaust flue piping connection and servicing
- Includes flexible one 2-inch rubber coupling and two adjustable bands
- Approved for all Lennox 90% furnaces

Vent Termination Kits
- Facilitates installation of combustion air intake pipe and flue exhaust pipe
- Refer to venting table in this bulletin to determine pipe size needed and proper termination kit required
- See Optional Accessories table and dimension drawings

Concentric Termination Kit - Direct Vent Applications
- 2 or 3 inch kit contains concentric termination assembly, reducer bushing and 45° elbow
- 2 inch kit for -030-045-070 models contains an outdoor exhaust accelerator
- Kit requires single hole penetration of roof or wall for installation
- Roof Termination Flashing Kit is available for use with 2 inch Kits
- CSA certified

Flush-Mount Termination Kit
- Kit contains flush-mount termination, accelerator, mounting template and hardware
- Kit may be used with 2, 2-1/2 or 3 in. pipe

Wall Assembly Termination Kits

Close Couple (US Only) - Direct Vent Applications
- 2 or 3 inch kit consists of close-couple, side-by-side PVC piping with galvanized steel wall cover plate
- Seals and isolates intake and exhaust piping penetration of wall
- Piping spacing and length is sized for proper wall installations
- CSA certified

Close Couple WTK (Canada Only) - Direct Vent Applications
- 2 or 3 inch kit contains one insulated faceplate, one insulated exhaust pipe, elbow and fittings

NOTE - Maintain a maximum of 6 inches between the inlet and outlet openings in the installation of the pipes.

Roof Termination Flashing Kit
- For vertical venting through a roof
- 2 or 3 inch kit contains two neoprene rubber roof flashings
- Vent pipe and insulation not furnished
- Flashing Kit can also be used with Concentric Vent Termination Kits used in vertical venting rooftop applications

CONTROLS

6 SureLight® Integrated Furnace Control
- Contains all necessary controls and relays to operate furnace
- Combustion air inducer is operated by the integrated furnace control
- Prior to ignition, a pre-purge cycle for 15 seconds is initiated
- After the main burners are turned off, a post-purge cycle for 5 seconds is run
- Flame sensor assures safe and reliable operation
- Should loss of flame occur, the integrated furnace control will initiate 4 re-attempts at ignition before locking out unit operation for 60 minutes
- Watchguard type circuit automatically resets ignition controls after one hour of continuous thermostat demand after unit lockout, eliminating nuisance calls for service
- Fan control consists of adjustable blower timed-off delay (60, 90, 120, 180 seconds - factory setting 90 seconds) and fixed blower timed-on delay (30 seconds heating, 2 seconds cooling)
- For air-conditioning applications, blower is automatically energized on thermostat demand for cooling
- Two accessory terminals furnished for additional power supply requirements for 120 volt (less than 1 amp) power humidifiers and powered air cleaners
- One additional terminal is furnished for power supply requirements for 24V (less than 0.5 amp) low voltage accessories
- Ignition control has a single red LED to indicate status and as an aid in troubleshooting
- Last ten codes are stored in non-volatile memory (accessible by recall button on control) for servicing

24 Volt Transformer (40VA)
- Furnished and factory installed on outside of control box
- Circuit breaker (furnished) is wired in series

Field Wiring Make-Up Box
- Furnished for line voltage wiring
- Factory installed internally on left side of furnace
- Box may be installed internally on right side of furnace

CONTROLS (continued)

Optional Accessories

M30 Smart Wi-Fi Thermostat

- Wi-Fi-enabled, electronic 7-day, universal, multi-stage, programmable, touchscreen thermostat
- 4 Heat/2 Cool
- Auto-changeover
- Dual-fuel control with optional outdoor sensor
- Controls dehumidification during cooling mode and humidification during heating mode

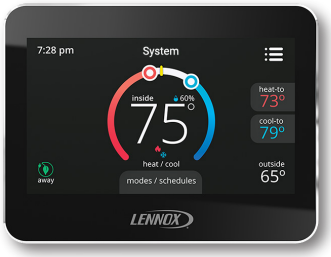

- Offers enhanced capabilities including humidification / dehumidification / dewpoint measurement and control, Humiditrol® control, and equipment maintenance reminders
- Easy to read 4.3 in. color touchscreen (measured diagonally)
- LCD display with backlight shows the current and set temperature, time, inside relative humidity, system status (operating mode and schedules) and outside temperature (optional outdoor sensor required)
- Smooth Setback Recovery starts system early to achieve setpoint at start of program period
- Compressor short-cycle protection (5 minutes)
- Up to four separate schedules are available plus Schedule IQ™
- One-Touch Away Mode - A quick and easy way to set the cooling and heating setpoints while away
- Smart Away™ - Uses geo-fencing technology to determine when the homeowner is within a predetermined distance from the home to operate the system when leaving, away and arriving
- Wi-Fi remote monitoring and adjustment through a home wireless network for desktop PCs, laptops and apps for smartphones or tablets
- Smart home automation compatible with Amazon Alexa®, Google Assistant and IFTTT
- Service Dashboard features online real-time monitoring of installed Lennox® smart thermostats

NOTE - See the M30 Smart Wi-Fi Thermostat Product Specifications bulletin in the Controls section for more information.

Remote Outdoor Temperature Sensor

- Used with the M30 Smart Thermostat
- Outdoor sensor allows thermostat to display outdoor temperature

NOTE - Sensor is required for the Enhanced Dehumidification Accessory (EDA).

Thermostat

- Thermostat is not furnished with unit
- See Lennox Price Book for selection

Blower Relay Kit (For Use With Two-Stage Outdoor Units)

- Allows furnace blower speed changes when matched with two-stage air conditioners or heat pumps

Furnace Twinning Panel

- Required to operate two identical furnaces simultaneously from a single thermostat
- For single stage conventional (1 heat/1 cool), multi-stage conventional (2 heat/2 cool) and heat pump (3 heat/2 cool) equipment
- Can be used with common or separate ducted systems
- Contains PC Control Board with terminal strip connections for thermostat and HVAC equipment
- LEDs indicate system operating status
- Uses standard 18-gauge thermostat wire
- Power Supply: 24 VAC, 40VA (transformer not furnished)
- Mounting base with hardware furnished
- Dimensions (H x W x D): 10 x 5 x 2 in.

NOTE - Only identical furnaces should be twinned in order to ensure that both furnace blowers start at the same time. If furnaces are not identical, back draft dampers can be installed in either the supply or return duct.

Up to four identical furnaces can be twinned. Requires two panels that are wired together.

Furnace Twinning Kit

- Required to operate two furnaces simultaneously
- Kit consists of twinning relays, quick connect terminals and mounting hardware
- Used for single-stage heating/single-stage cooling with a single-stage thermostat

Transformer (75VA)

- Recommended when furnace is used with zoning or defrost thermostats and other 24V accessories requiring a higher VA rating
- Circuit breaker (furnished) is wired in series
- Replaces the standard 40VA transformer

FEATURES

BLOWER

- Direct drive blower
- Statically and dynamically balanced
- Resiliently mounted
- Blower assembly easily removed for servicing

7 Power Saver™ Constant Torque Blower Motor

- DC Brushless Motor
- High Efficiency Constant Torque
- ECM (Electronically Commutated Motor)
- Motor is programmed to provide constant torque at each of the selectable speeds
- Motor is controlled by the Integrated Furnace Control
- Blower speeds are easily changed on the integrated furnace control
- See Blower Data tables

CABINET

- Low-profile, narrow width allows easy installation
- Heavy-gauge, cold rolled steel construction
- Pre-painted cabinet finish
- Flanges provided on supply air opening for ease of plenum connection or alignment with indoor coil
- 8 Insulated with foil faced insulation on sides and back of heating compartment
- Sealed blower compartment
- Complete service access
- 9 Safety interlock switch automatically shuts off power to unit when blower compartment access door is remove
- 10 Gas piping and electrical inlets are provided in both sides of cabinet

Coil Match-Up

- All Lennox downflow indoor coils will physically match the furnace supply air opening with the same letter designation (A, B, C, D) as in the furnace model number

Low Leakage Cabinet

- All models have less than 2% air leakage and meet ANSI/ASHRAE Standard 193-2010 "Method of Test for Determining the Air Tightness of HVAC Equipment"

Optional Accessories

Condensate Drain Heat Cable Kits

- Self-limiting wattage heat cable prevents condensate drain from freezing in unconditioned areas
- Available in 6 or 24 ft. lengths

Crawl Space Vent Drain Kit

- Allows venting through a crawl space for downflow applications
- Includes 2 or 3 in. sanitary tee, 2 in. PVC assembly, PVC boot and clamp
- Kit for Canada is certified to ULC S636

Downflow Combustible Flooring Base

- Required for heating only units installed on combustible floors
- Not required in add-on cooling applications
- See Dimension Drawing

FILTER (not furnished)

- Filter and provisions for external mounting must be field provided

Optional Accessories

Downflow Filter Cabinet

- Filter cabinet mounts directly on top of furnace
- "B and "C" width cabinets have two filters
- Filter rails are furnished
- Front access for servicing
- Cleanable filter(s) are furnished

REFRIGERATION DETECTION SYSTEM (RDS)

Optional Accessories

Refrigerant Detection System (RDS) Coil Sensor Kit

- Complies with UL 60335-2-40 approved standard
- Required for field installation for all systems using R-454B refrigerant if sensor is not furnished with coil
- Consists of Refrigerant Detection System (RDS) sensor, lineset sleeves, mounting brackets and A2L labeling
- Sensor ensures safe operation for systems equipped with R-454B refrigerant
- Sensor will detect anu R-454B refrigerant

Refrigerant Detection System (RDS) Blower Control Board

Communicating Blower Control Board (Universal)

- Communicating Blower Control Board and Sensor can be used universally with any Lennox® communicating furnace or any non-communicating 24 volt furnace

Non-Communicating Blower Control Board

- Non-Communicating Blower Control Board and Sensor can be used with any non-communicating 24 volt furnace

Standard Features

- Complies with UL 60335-2-40 approved standard
- Required for all systems using R-454B refrigerant
- Connects to the RDS sensor furnished with the RDS Coil Sensor Kit
- Supports up to two RDS Sensors (factory setting)
- Used as an interface between indoor unit and thermostat to control system
- Ensures safe operation for systems equipped with R-454B refrigerant
- If R-454B refrigerant is detected, the refrigerant detection system will stop compressor and/or heating operating and operate the blower to reduce concentrations in the conditioned space
- Once safe levels are reached the HVAC system will resume normal operation
- Multi-color LED for system status and as an aid in troubleshooting
  - Flashing LED codes for system status (Green/Blue) and diagnosing Sensor errors (Red)
- Alarm relay can trigger an external alarm if R-454B refrigerant is detected
- Zone relay opens all zone dampers (if part of a zoning system) if R-454B refrigerant is detected
- Power is disabled to non-communicating thermostats to prevent demand if R-454B refrigerant is detected
- On system start-up blower will run for five minutes and any thermostat demands are disabled
- Dimensions (H x W x D): 7-7/16 x 7-7/16 x 2-1/2 (189 x 189 x 127 mm)

NOTE - See Refrigerant Detection System (RDS) Components Table on page 11.

See the CK40 Indoor Coil Product Specifications bulletins for more information.

Refer to the Installation Instructions for additional information.

SPECIFICATIONS

	Model No.	ML193DF045XE36B	ML193DF070XE36B	ML193DF090XE48C
Gas Heating Performance	AHRI Reference No.	20556884	20556885	20556886
	[1] AFUE	93%	93%	93%
	Input - Btuh	44,000	66,000	88,000
	Output - Btuh	43,000	63,000	84,000
	Temperature rise range - °F	30 - 60	40 - 70	45 - 75
	Gas Manifold Pressure (in. w.g.) Nat. Gas / LPG/Propane	3.5 / 10.0	3.5 / 10.0	3.5 / 10.0
	High static - in. w.g.	0.50	0.50	0.50
Connections in.	Intake / Exhaust Pipe (PVC)	2 / 2	2 / 2	2 / 2
	Gas pipe size IPS	1/2	1/2	1/2
	Condensate Drain Trap (PVC pipe) - i.d.	3/4	3/4	3/4
	with furnished 90° street elbow	3/4 slip x 3/4 Mipt	3/4 slip x 3/4 Mipt	3/4 slip x 3/4 Mipt
	with field supplied (PVC coupling) - o.d.	3/4 slip x 3/4 MPT	3/4 slip x 3/4 MPT	3/4 slip x 3/4 MPT
Indoor Blower	Wheel nom. dia. x width - in.	10 x 8	10 x 8	10 x 10
	Motor output - hp	1/2	1/2	3/4
	Tons of add-on cooling	1.5 - 3	1.5 - 3	2.5 - 4
	Air Volume Range - cfm	335 - 1430	340 - 1415	825 - 1720
Electrical Data	Voltage	120 volts - 60 hertz - 1 phase		
	Blower motor full load amps	6.8	6.8	8.4
	Maximum overcurrent protection	15	15	15
Shipping Data	lbs. - 1 package	122	128	151

NOTE - Filters and provisions for mounting are not furnished and must be field provided.

[1] Annual Fuel Utilization Efficiency based on DOE test procedures and according to FTC labeling regulations. Isolated combustion system rating for non-weatherized furnaces.

INSTALLATION CLEARANCES

Sides	[1] 0 inches (0 mm)
Rear	0 inches (0 mm)
Top/Plenum	1 inch (25 mm)
Front	0 inches (0 mm)
Front (service/alcove)	24 inches (610 mm)
Floor	[2] Combustible

NOTE - Air for combustion must conform to the methods outlined in the National Fuel Gas Code (NFPA 54/ ANSI-Z223.1) or the National Standard of Canada CAN/CSA-B149.1 “Natural Gas and Propane Installation Code”.

NOTE - In the U.S. flue sizing must conform to the methods outlined in the current National Fuel Gas Code (NFPA 54/ANSI-Z223.1) or applicable provisions of local building codes. In Canada flue sizing must conform to the methods outlined in National Standard of Canada CAN/CSA-B149.1.

[1] Allow proper clearances to accommodate condensate trap and vent pipe installation.

[2] Clearance for installation on combustible floor if Optional Downflow Combustible Flooring Base is installed between furnace and combustible floor. Not required in add-on cooling applications if installed in accordance with local codes or National Fuel Gas Code ANSI-Z223.1 or CAN/CGA−149.1,.2. Do not install the furnace directly on carpeting, tile, or other combustible materials other than wood flooring.

OPTIONAL ACCESSORIES

			"B" Width Models	"C" Width Models
CABINET ACCESSORIES				
Downflow Combustible Flooring Base			**11M60**	**11M61**
CONDENSATE DRAIN KITS				
Condensate Drain Heat Cable		6 ft.	**26K68**	**26K68**
		24 ft.	**26K69**	**26K69**
Crawl Space Vent Drain Kit		US	**51W18**	**51W18**
		Canada	**15Z70**	**15Z70**
CONTROLS				
Blower Relay Kit (for two-stage outdoor units)			**85W66**	**85W66**
M30 Smart Wi-Fi Thermostat			**15Z69**	**15Z69**
Remote Outdoor Temperature Sensor			**X2658**	**X2658**
Furnace Twinning Panel			**Y3653**	**Y3653**
Furnace Twinning Kit			**16W72**	**16W72**
Transformer (75VA)			**27J32**	**27J32**
DOWNFLOW FILTER KITS				
[1] **Downflow Filter Cabinet**			**51W07**	**51W08**
		No. and Size of filter - in.	(2) 16 x 20 x 1	(2) 16 x 20 x 1
TERMINATION KITS				
See Installation Instructions for specific venting information.				
Direct Vent	Concentric	US - 2 in.	**71M80**	**69M29**
		3 in.	**- - -**	**60L46**
		Canada - 2 in.	**44W92**	**44W92**
		3 in.	**- - -**	**44W93**
	Flush-Mount	US - 2, 2-1/2 or 3 in.	**51W11**	**51W11**
		Canada - 2, 2-1/2 or 3 in.	**51W12**	**51W12**
	Wall - Close Couple	US - 2 in.	**22G44**	**- - -**
		3 in.	**44J40**	**44J40**
	Wall - Close Couple WTK	Canada - 2 in.	**30G28**	**- - -**
		3 in.	**81J20**	**81J20**
	Roof Termination Flashing Kit (no vent pipe - 2 flashings)	2 in.	**15F75**	**15F75**
		3 in.	**44J41**	**44J41**
VENTING				
Flue Coupling		2 in.	**17H92**	**17H92**

[1] Cleanable polyurethane frame type filter.

NOTE - Termination Kits (**44W92**, **44W93**, **30G28**, **51W12**, **81J20**) and Crawl Space Vent Drain Kit (**15Z70**) are certified to ULC S636 standard for use in Canada only.

GAS HEAT ACCESSORIES

Models	High Altitude Pressure Switch Kit		Natural Gas to LPG/Propane Kit	LPG/Propane to Natural Gas Kit	Natural Gas High Altitude Orifice Kit	LPG/Propane High Altitude Orifice Kit	Muffler (US Only)
	4501 - 7500 ft.	7501 - 10,000 ft.	0 - 7500 ft.	0 - 7500 ft.	7501 - 10,000 ft.	7501 - 10,000 ft.	
045	11U65	11U66	11K49	73W81	73W37	11K44	15Y66 (2-inch)
070	11U65	11U66	11K49	73W81	73W37	11K44	15Y66 (2-inch)
090	11U65	11U66	11K49	73W81	73W37	11K44	15Y66 (2-inch)

REFRIGERANT DETECTION SYSTEM (RDS) COMPONENTS

Description		Order No.
Refrigerant Detection System (RDS) Coil Sensor Kit		26Z69
Refrigerant Detection System (RDS) Blower Control Board	Any Lennox® Communicating Furnace or any Non-Communicating 24V Furnace (Universal)	27A03
	Any Non-Communicating 24V Furnace	27A02

NOTE - Communicating Blower Control Board and Sensor can be used universally with Lennox® communicating furnace or any non-communicating 24 volt furnace. Non-Communicating Blower Control Board and Sensor can be used with any non-communicating 24 volt furnace.

HIGH ALTITUDE DERATE

NOTE - Units may be installed at altitudes up to 10,000 ft.
At altitudes above 4501 ft. the unit must be derated to match the manifold pressure information shown below.
Units installed at altitudes of 4501 to 10,000 ft. require a pressure switch change.
Units installed at altitudes of 7501 to 10,000 ft. require an orifice change.
See the Gas Heat Accessories table for ordering information.

NOTE - This is the only permissible derate for these units.

NOTE - In Canada, certification for installations at elevations over 4500 feet is the jurisdiction of local authorities.

Input	Gas	Manifold Pressure in. w.g.					Supply Line Pressure in. w.g. 0 - 10,000 ft.	
		0 - 4500 ft.	4501 - 5500 ft.	5501 - 6500 ft.	6501 - 7500 ft.	7501 - 10,000 ft.		
All Sizes	Natural	3.5	3.3	3.2	3.1	3.5	4.5	13.0
	LPG/Propane	10.0	9.4	9.1	8.9	10.0	11.0	13.0

VENT LENGTHS - UNINSULATED EXHAUST PIPE IN UNCONDITIONED SPACE

[1] Winter Design Temperatures	Vent Pipe Diameter	Unit Input Size					
		045		070		090	
		Maximum Uninsulated Exhaust Vent Length (ft.)					
		PVC	PolyPro InnoFlue	PVC	PolyPro InnoFlue	PVC	PolyPro InnoFlue
32 to 21°F	1-1/2 in.	25	N/A	25	N/A	N/A	N/A
	2 in.	18	16	31	28	50	48
	2-1/2 in.	13	N/A	24	N/A	42	N/A
	3 in.	9	9	18	18	35	35
20 to 1°F	1-1/2 in.	15	N/A	20	N/A	N/A	N/A
	2 in.	9	8	18	16	32	29
	2-1/2 in.	5	N/A	13	N/A	24	N/A
	3 in.	N/A	N/A	8	8	19	19
0 to –20°F	1-1/2 in.	10	N/A	15	N/A	N/A	N/A
	2 in.	5	N/A	12	10	22	19
	2-1/2 in.	N/A	N/A	7	N/A	15	N/A
	3 in.	N/A	N/A	N/A	N/A	10	10

NOTE - Concentric terminations are equivalent to 5 ft. of straight pipe and should be included when measuring total pipe length.

[1] Refer to 99% Minimum Design Temperature table provided in the current edition of the ASHRAE Handbook-Fundamentals.

PolyPro® poly-propylene vent pipe is a registered trademark of DuraVent®.

Innoflue® is a registered trademark of Centrotherm Eco Systems.

OUTDOOR TERMINATION KIT USAGE

Input Size	Vent Pipe Diameter (in.)	Standard Terminations				Concentric Terminations		
		Flush Mount Kit	Wall Kit		Field Fabricated Exhaust Accelerator Size Required	Concentric Kit		
			2 inch	3 inch		1-1/2 inch	2 inch	3 inch
		51W11 (US) [5] 51W12 (CA)	22G44 (US) [5] 30G28 (CA)	44J40 (US) [5] 81J20 (CA)		71M80 (US) [5] 44W92 (CA)	69M29 (US) [5] 44W92 (CA)	60L46 (US) [5] 44W93 (CA)
045	[1] 1-1/2	[4] YES	YES	[2] YES	1-1/2 in.	[3] YES	- - -	- - -
	2	[4] YES	YES	[2] YES	1-1/2 in.	[3] YES	- - -	- - -
	2-1/2	[4] YES	YES	[2] YES	1-1/2 in.	[3] YES	- - -	- - -
	3	[4] YES	YES	[2] YES	1-1/2 in.	[3] YES	- - -	- - -
070	[1] 1-1/2	[4] YES	YES	[2] YES	1-1/2 in.	[3] YES	- - -	- - -
	2	[4] YES	YES	[2] YES	1-1/2 in.	[3] YES	- - -	- - -
	2-1/2	[4] YES	YES	[2] YES	1-1/2 in.	[3] YES	- - -	- - -
	3	[4] YES	YES	[2] YES	1-1/2 in.	[3] YES	- - -	- - -
090	2	[4] YES	- - -	YES	2 in.	- - -	YES	YES
	2-1/2	[4] YES	- - -	YES	2 in.	- - -	YES	YES
	3	[4] YES	- - -	YES	2 in.	- - -	YES	YES

NOTE - Standard Terminations do not include any vent pipe or elbows external to the structure.
Any vent pipe or elbows external to the structure must be included in total vent length calculations. See Vent Length Tables.

[1] 2 inch to 1-1/2 inch reducer required, must be field provided.

[2] Requires field provided 1-1/2 in. outdoor exhaust accelerator.

[3] Concentric Kits **71M80** and **44W92** include 1-1/2 in. outdoor exhaust accelerator, required when used with 045 and 070 input models. Accelerator is not used with 090 input models. NOTE - When using 1-1/2 in. piping, the pipe must be transitioned to 2 in. pipe when used with the Concentric Kit.

[4] Flush Mount Kit **51W11** and **51W12** includes 1-1/2 in. outdoor exhaust accelerator, required when used with all models. NOTE - When using 1-1/2 in. piping, the pipe must be transitioned to 2 in. pipe when used with the Flush Mount Kit.

[5] Termination Kits **30G28**, **44W92**, **44W93**, **51W12** and **81J20** are certified to ULC S636 standard for use in Canada only.

VENT LENGTHS

STANDARD TERMINATION AT ELEVATION 0 - 10,000 ft.

	Pipe Size	1-1/2 in.			2 in.			2-1/2 in.			3 in.		
	Input	045	070	090	045	070	090	045	070	090	045	070	090
No. of 90 ELL	1	20	15	N/A	61	46	24	100	80	43	127	127	108
	2	15	10	N/A	56	41	19	95	75	38	122	122	103
	3	10	N/A	N/A	51	36	14	90	70	33	117	117	98
	4	N/A	N/A	N/A	46	31	N/A	85	65	28	112	112	93
	5	N/A	N/A	N/A	41	26	N/A	80	60	23	107	107	88
	6	N/A	N/A	N/A	36	21	N/A	75	55	18	102	102	83
	7	N/A	N/A	N/A	31	16	N/A	70	50	13	97	97	78
	8	N/A	N/A	N/A	26	11	N/A	65	45	N/A	92	92	73
	9	N/A	N/A	N/A	21	N/A	N/A	60	40	N/A	87	87	68
	10	N/A	N/A	N/A	10	N/A	N/A	55	35	N/A	82	82	63

CONCENTRIC TERMINATION ELEVATION 0 - 10,000 ft.

	Pipe Size	1-1/2 in.			2 in.			2-1/2 in.			3 in.		
	Input	045	070	090	045	070	090	045	070	090	045	070	090
No. of 90 ELL	1	15	10	N/A	53	38	22	90	70	39	111	111	104
	2	10	N/A	N/A	48	33	17	85	65	34	106	106	99
	3	N/A	N/A	N/A	43	28	12	80	60	29	101	101	94
	4	N/A	N/A	N/A	38	23	N/A	75	55	24	96	96	89
	5	N/A	N/A	N/A	33	18	N/A	70	50	19	91	91	84
	6	N/A	N/A	N/A	28	13	N/A	65	45	14	86	86	79
	7	N/A	N/A	N/A	23	N/A	N/A	60	40	N/A	81	81	74
	8	N/A	N/A	N/A	18	N/A	N/A	55	35	N/A	76	76	69
	9	N/A	N/A	N/A	13	N/A	N/A	50	30	N/A	71	71	64
	10	N/A	N/A	N/A	N/A	N/A	N/A	45	25	N/A	66	66	59

NOTES - Additional vent pipe and elbows used to terminate vent pipe outside the structure must be included in the total vent length calculation.
Intake and exhaust pipes are sized separately.
Values in table are for separate intake or exhaust pipe lengths.
Both intake and exhaust pipe must be the same size diameter.

VENT LENGTHS (EXHAUST) - VENTILATED ATTIC OR CRAWLSPACE INTAKE AIR - FEET

STANDARD TERMINATION AT ELEVATION 0 - 10,000 ft.

	Pipe Size	1-1/2 in.			2 in.			2-1/2 in.			3 in.		
	Input	045	070	090	045	070	090	045	070	090	045	070	090
No. of 90 ELL	1	15	10	N/A	51	36	14	85	65	28	107	107	88
	2	10	N/A	N/A	46	31	9	80	60	23	102	102	83
	3	N/A	N/A	N/A	41	26	4	75	55	18	97	97	78
	4	N/A	N/A	N/A	36	21	N/A	70	50	8	92	92	73
	5	N/A	N/A	N/A	31	16	N/A	65	45	3	87	87	68
	6	N/A	N/A	N/A	26	11	N/A	60	40	N/A	82	82	63
	7	N/A	N/A	N/A	21	6	N/A	55	35	N/A	77	77	58
	8	N/A	N/A	N/A	16	1	N/A	50	30	N/A	72	72	53
	9	N/A	N/A	N/A	11	N/A	N/A	45	25	N/A	67	67	48
	10	N/A	N/A	N/A	6	N/A	N/A	40	20	N/A	62	62	43

NOTES - Additional vent pipe and elbows used to terminate vent pipe outside the structure must be included in the total vent length calculation.

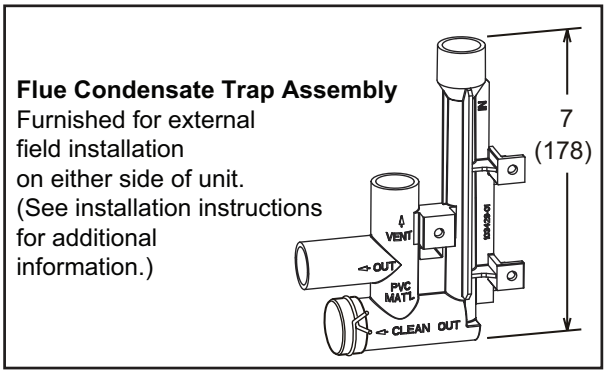

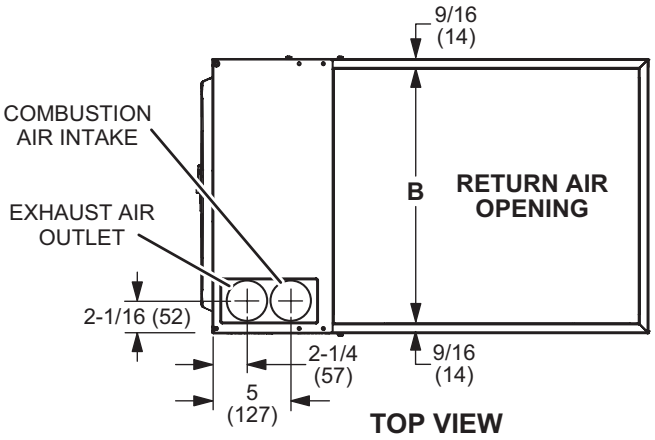

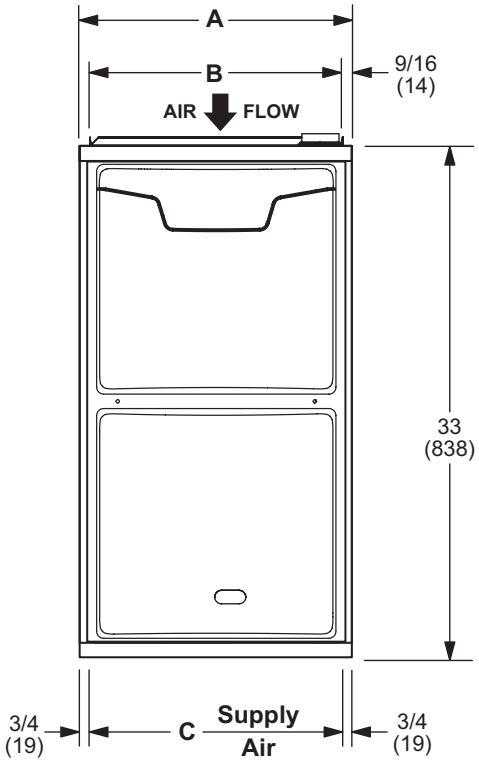

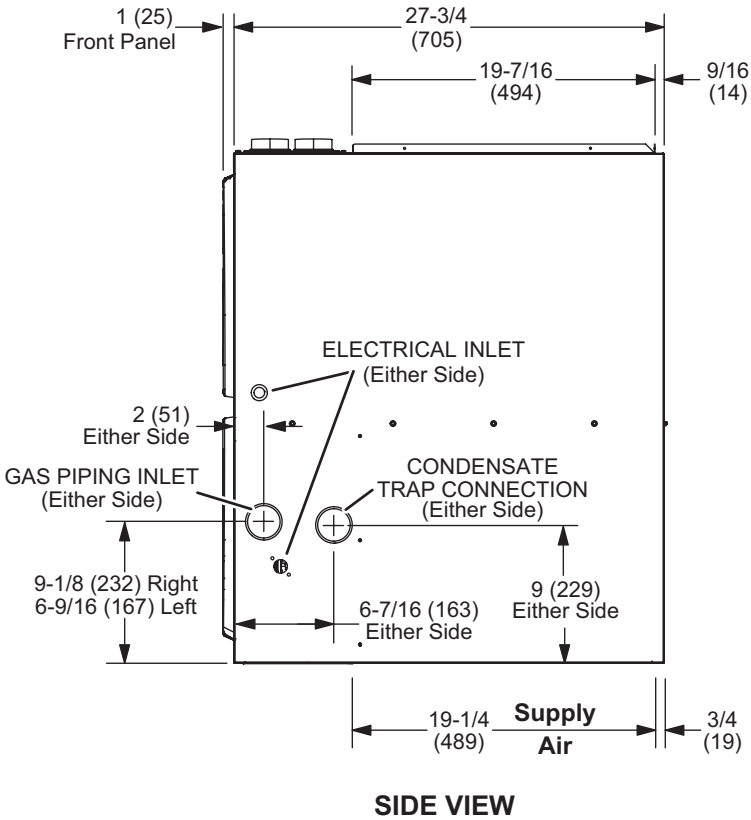

Model No.	A		B		C	
	in.	mm	in.	mm	in.	mm
ML193DF045XE36B ML193DF070XE36B	17-1/2	446	16-3/8	416	16	406
ML193DF090XE48C	21	533	19-7/8	505	19-1/2	495

DOWNFLOW FILTER CABINET

"B AND "C" WIDTH FURNACES
(Two Filters)

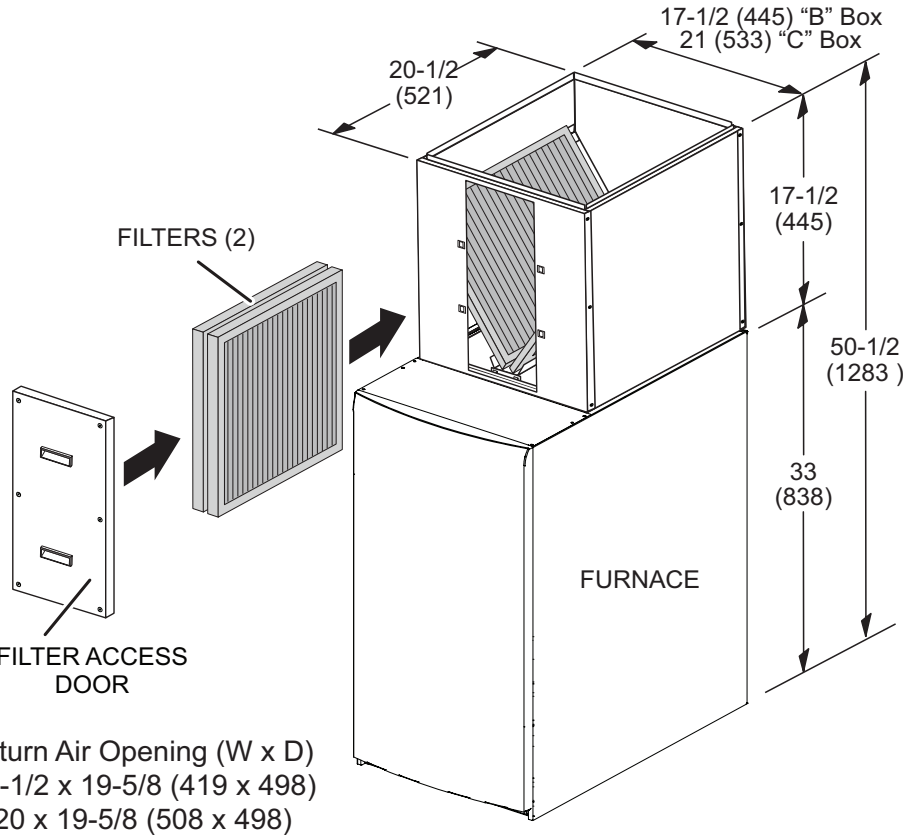

NOTE: Return Air Opening (W x D)
"B" Box 16-1/2 x 19-5/8 (419 x 498)
"C" Box 20 x 19-5/8 (508 x 498)

DIMENSIONS - OPTIONAL ACCESSORIES

DOWNFLOW COMBUSTIBLE FLOORING BASE

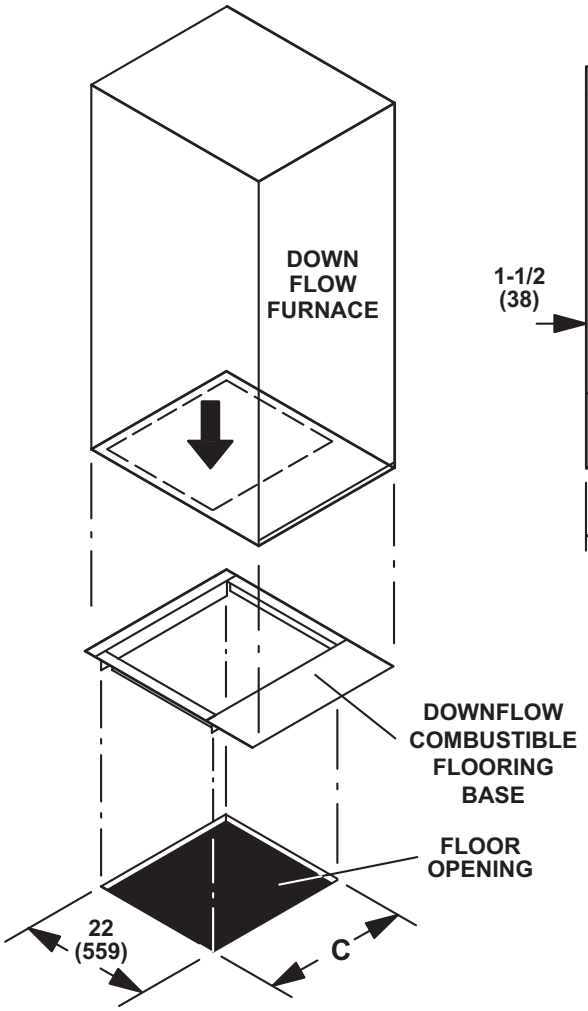

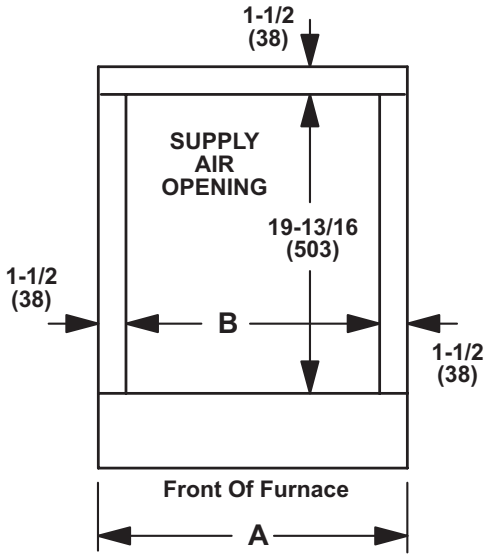

TOP VIEW

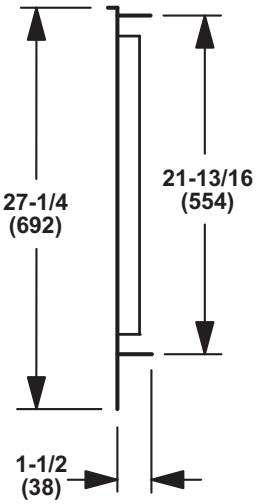

SIDE VIEW

Cabinet Width	Catalog Number	A		B		C	
		in.	mm	in.	mm	in.	mm
B	**11M60**	19-9/16	497	16-9/16	421	18-3/4	476
C	**11M61**	23-1/16	586	20-1/16	510	22-1/4	565

DIMENSIONS - FURNACE/COIL COMBINED DIMENSIONS

Model		Coil/Furnace Width		Coil Height		Overall Height	
CK40DT	**CRX35**	in.	mm	in.	mm	in.	mm
CK40DT-24B	CRX35-24B	17-1/2	445	18	457	51	1295
CK40DT-30/36B	CRX35-30/36B	17-1/2	445	23-1/2	597	56-1/2	1435
CK40DT-30/36C	CRX35-30/36C	21	533	23-1/2	597	56-1/2	1435
CK40DT-42B	CRX35-42B	17-1/2	445	23-1/2	597	56-1/2	1435
CK40DT-48C	CRX35-48C	21	533	27-1/2	699	60-1/2	1537
CK40CT-50/60C	CRX35-50/60C	21	533	27-1/2	699	60-1/2	1537

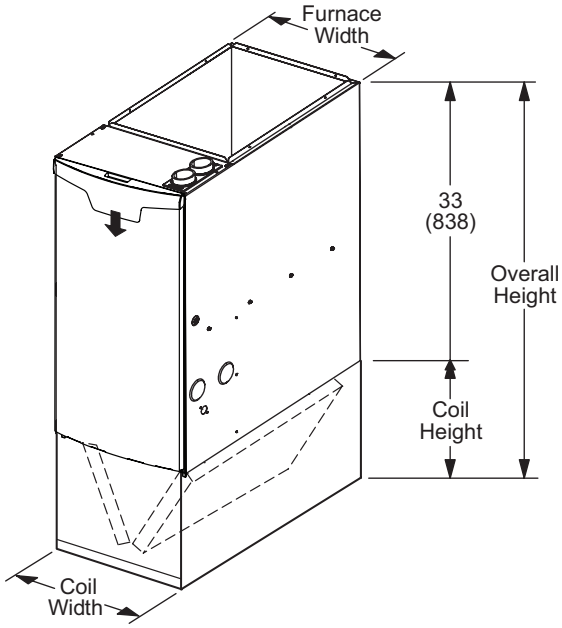

FLUSH-MOUNT VENT TERMINATION KIT 51W11 (US) or 51W12 (CANADA)

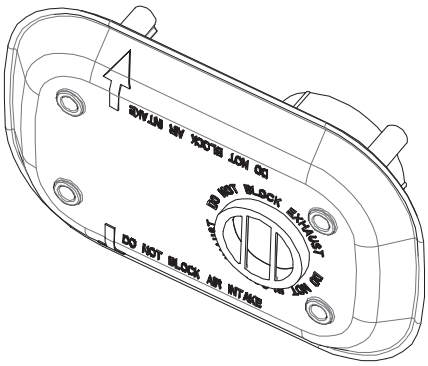

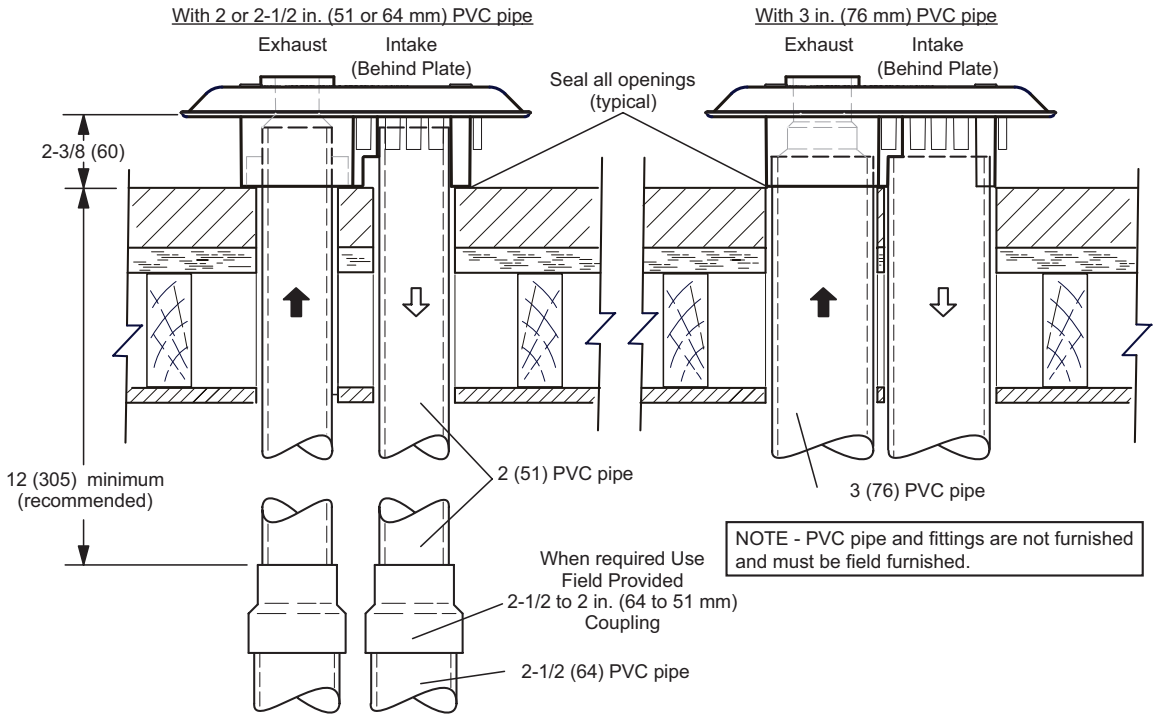

NOTE - PVC pipe and fittings are not furnished and must be field furnished.

MUFFLERS
15Y66 - 2-inch

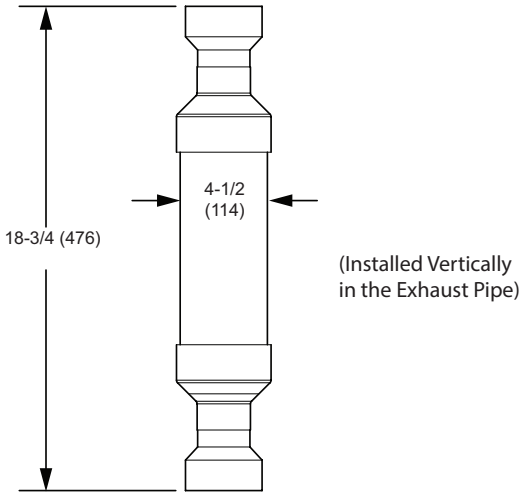

CONCENTRIC WALL TERMINATION APPLICATIONS

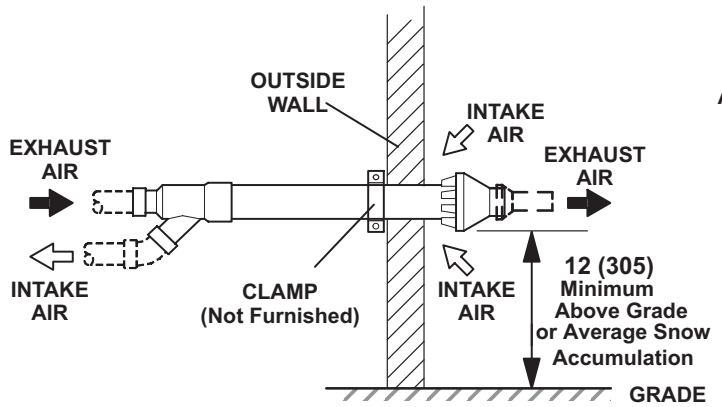

CONCENTRIC ROOF TERMINATION APPLICATIONS

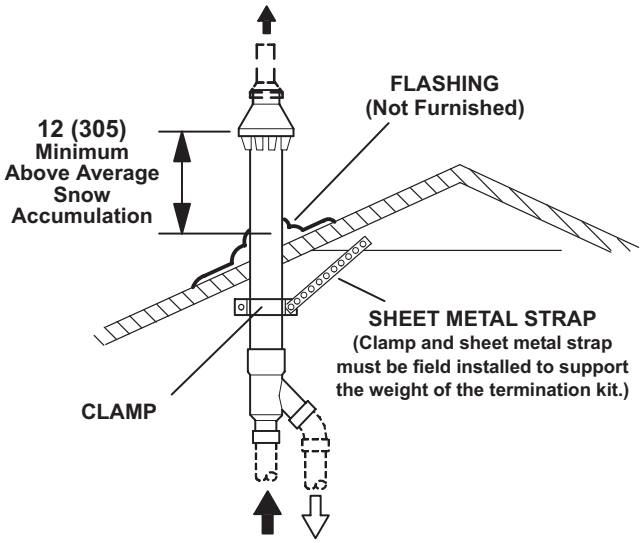

71M80 / 69M29 / 44W92 − 2 inch kits
60L46 / 44W93 − 3 inch kits
See Installation Instructions for additional information.

Note - Field provided reducer may be required to adapt different vent pipe sizes to termination.

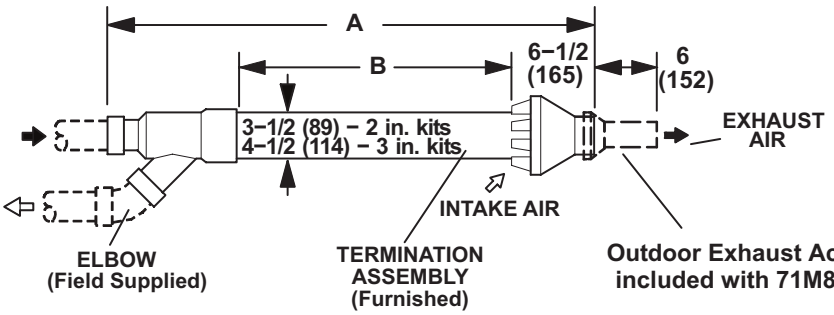

Cat. No.	A		B	
	in.	mm	in.	mm
71M80 69M29	33−3/8	848	16−3/4	425
44W92 (Canada)	29	737	15−1/2	394
60L46	38−7/8	987	21−3/16	538
44W93 (Canada)	36−1/8	918	19−1/2	495

NOTE − Typical illustration for dimensions only. Design may vary depending on kit ordered.

WALL TERMINATION KITS (CLOSE-COUPLE)
EXTENDED VENT FOR GRADE CLEARANCE
2 inch (51 mm) 22G44 (US)
3 inch (76 mm) 44J40 (US)
See Installation Instructions for additional information.

Note - Field provided reducer may be required to adapt different vent pipe sizes to termination.

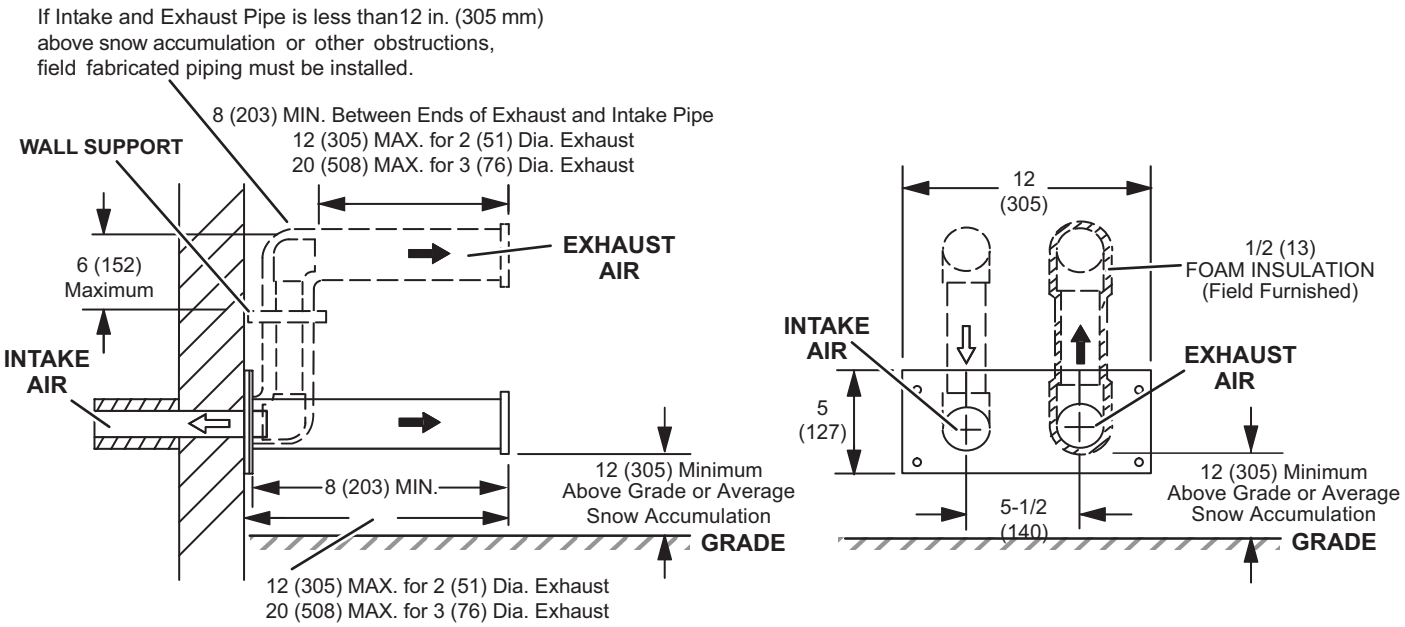

WALL TERMINATION KITS (CLOSE-COUPLE)
EXTENDED VENT FOR GRADE CLEARANCE
2 inch (51 mm) 30G28 (WTK Canada)
3 inch (76 mm) 81J20 (WTK Canada)
See Installation Instructions for additional information.

Note - Field provided reducer may be required to adapt different vent pipe sizes to termination.

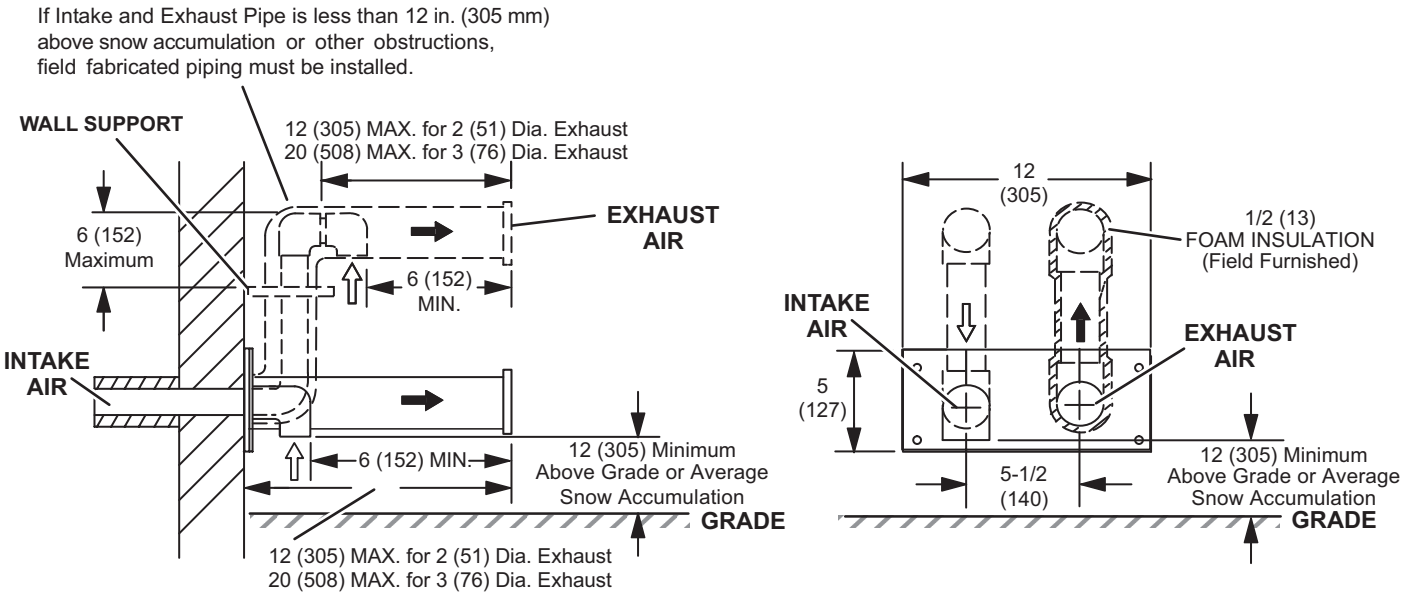

BLOWER DATA

ML193DF045XE36B PERFORMANCE (Less Filter)

External Static Pressure in. w.g.	Air Volume / Watts at Various Blower Speeds									
	High (Black)		Medium-High (Brown)		Medium (Blue)		Medium-Low (Yellow)		Low (Red)	
	cfm	Watts	cfm	Watts	cfm	Watts	cfm	Watts	cfm	Watts
0.00	1436	316	1304	251	1173	186	944	104	786	69
0.10	1401	330	1275	261	1139	193	904	111	741	74
0.20	1366	344	1246	271	1105	200	864	118	696	79
0.30	1343	350	1218	278	1064	206	821	123	647	84
0.40	1311	358	1186	286	1034	214	780	127	598	87
0.50	1278	369	1160	293	998	220	736	133	544	93
0.60	1255	372	1124	301	968	228	692	138	495	97
0.70	1223	384	1095	308	931	233	646	143	442	102
0.80	1202	395	1059	312	896	239	605	149	395	106
0.90	1133	372	1033	321	864	246	561	153	350	110
1.00	981	334	994	328	827	253	519	158	- - -	- - -

ML193DF070XE36B PERFORMANCE (Less Filter)

External Static Pressure in. w.g.	Air Volume / Watts at Various Blower Speeds									
	High (Black)		Medium-High (Brown)		Medium (Blue)		Medium-Low (Yellow)		Low (Red)	
	cfm	Watts	cfm	Watts	cfm	Watts	cfm	Watts	cfm	Watts
0.00	1430	313	1336	252	1188	181	949	102	804	68
0.10	1407	321	1295	257	1150	188	909	108	753	73
0.20	1384	329	1254	262	1112	195	869	114	702	78
0.30	1346	342	1235	273	1080	203	825	119	647	82
0.40	1314	355	1198	278	1037	209	778	124	600	86
0.50	1301	360	1175	284	1002	215	737	131	541	92
0.60	1264	365	1120	293	973	223	693	136	492	97
0.70	1235	375	1098	300	934	228	650	142	439	100
0.80	1210	385	1068	308	896	236	602	147	392	105
0.90	1173	392	1033	312	870	243	556	152	- - -	- - -
1.00	1066	350	1002	324	831	249	516	157	- - -	- - -

ML193DF090XE48C PERFORMANCE (Less Filter)

External Static Pressure in. w.g.	Air Volume / Watts at Various Blower Speeds									
	High (Black)		Medium-High (Brown)		Medium (Blue)		Medium-Low (Yellow)		Low (Red)	
	cfm	Watts	cfm	Watts	cfm	Watts	cfm	Watts	cfm	Watts
0.00	1790	368	1585	264	1458	212	1347	181	1234	136
0.10	1741	384	1526	275	1400	221	1299	189	1174	145
0.20	1692	400	1467	286	1342	230	1251	197	1114	154
0.30	1665	413	1429	296	1287	238	1209	207	1066	163
0.40	1619	426	1393	307	1245	246	1150	215	1003	171
0.50	1562	434	1341	315	1198	255	1100	222	941	177
0.60	1531	444	1287	321	1150	261	1049	230	898	183
0.70	1495	456	1246	332	1102	271	1004	237	847	190
0.80	1441	462	1204	339	1052	278	948	242	789	196
0.90	1298	403	1163	348	1012	286	900	249	730	203
1.00	1120	308	1118	355	964	292	848	256	666	209

REVISIONS

Sections	Description of Change
Approvals	Removed ENERGY STAR® usage.

Visit us at www.Lennox.com
For the latest technical information, www.LennoxPros.com
Contact us at 1-800-9-LENNOX

NOTE - Due to Lennox' ongoing commitment to quality, Specifications, Ratings and Dimensions subject to change without notice and without incurring liability.
Improper installation, adjustment, alteration, service or maintenance can cause property damage or personal injury.
Installation and service must be performed by a qualified installer and servicing agency.

©2026 Lennox Industries, Inc.