GAS FURNACES

ML296UHV

MERIT® SERIES

Upflow / Horizontal - Two-Stage Heat - Variable Speed Blower

RESIDENTIAL PRODUCT SPECIFICATIONS

Bulletin No. 210869
July 2026
Supersedes all previous versions

MERIT® SERIES

QUALIFIED ONLY IN

U.S. SOUTH: AL, AZ, AR, CA, DC, DE, FL, GA, HI, KY, LA, MD, MS, NV, NM, NC, OK, SC, TN, TX, VA

ENERGY STAR

AFUE - 96%
Input - 44,000 to 110,000 Btuh
Nominal Add-on Cooling - 3 to 5 Tons

MODEL NUMBER IDENTIFICATION

ML 2 96 UH 070 X V 36 B

- **Unit Type** — ML = Merit® Series
- **Stages** — 2 = Two-Stage
- **AFUE** — 96 = 96%
- **Configuration** — UH = Upflow/Horizontal
- **Nominal Gas Heat Input** — 045 = 44,000 Btuh; 070 = 66,000 Btuh; 090 = 88,000 Btuh; 110 = 110,000 Btuh
- **Low NO_x** — X = Units meet California Nitrogen Oxides Standard (40 ng/J)
- **Blower** — V = Variable Speed Blower Motor
- **Nominal Add-On Cooling Capacity** — 36 = 2 - 3 tons; 48 = 2.5 - 4 tons; 60 = 3 - 5 tons
- **[1] Cabinet Width** — B = 17-1/2 in.; C = 21 in.

[1] Indoor coils with the same letter designation physically matches the furnace.

FEATURE HIGHLIGHTS

1. Lennox Duralok Plus™ Heat Exchanger
2. Secondary Heat Exchanger
3. Inshot Burners
4. SureLight® Hot Surface Ignitor
5. Two-Stage Gas Control Valve
6. Two-Speed Combustion Air Inducer
7. Flame Rollout Switches
8. SureLight® Integrated Furnace Control
9. Variable Speed Direct Drive Blower
10. Insulated Cabinet
11. Safety Interlock Switch
12. Gas Piping And Electrical Inlets

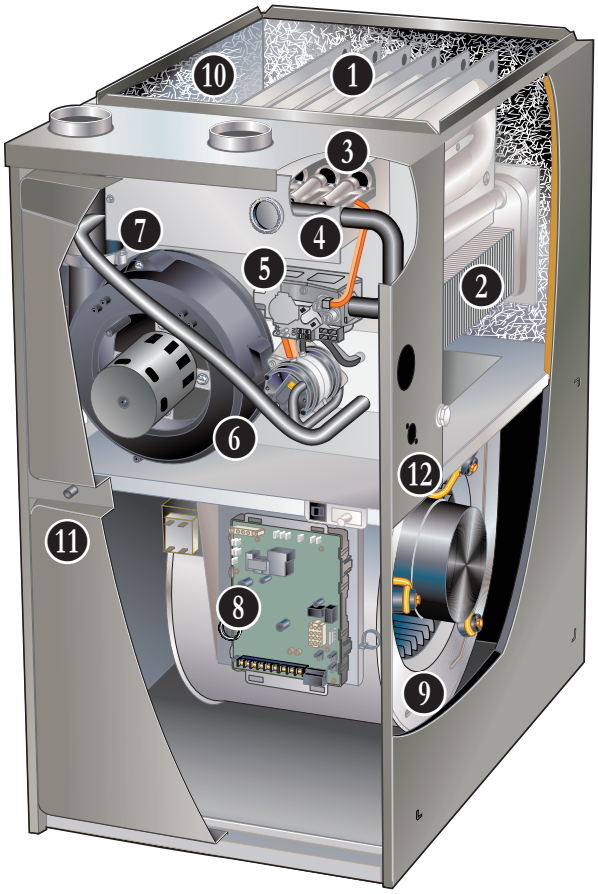

NOTE - ML296UHV FURNACES CANNOT BE TWINNED!

CONTENTS

Approvals And Warranty . . . 3
Blower Data . . . 21
Dimensions - Furnace/Coil Combined Dimensions . . . 17
Dimensions - Optional Accessories . . . 16
Dimensions - Optional Accessories - Venting . . . 18
Dimensions - Unit - Horizontal Position . . . 15
Dimensions - Unit - Upflow Position . . . 14
Features . . . 3
Gas Heat Accessories . . . 8
High Altitude Derate . . . 8
Installation Clearances . . . 10
Optional Accessories . . . 10
Specifications . . . 9
Vent Lengths - Uninsulated Exhaust Pipe In Unconditioned Space . . . 11

APPROVALS AND WARRANTY

APPROVALS

- AHRI Certified
- Certified by CSA International
- Tested and rated according to US DOE test procedures and FTC labeling regulations
- ENERGY STAR® units are certified only in the U.S. South in certain states and are designed to use less energy, help save money on utility bills, and help protect the environment
- ISO 9001 Registered Manufacturing Quality System
- Blower data from unit tests conducted in Lennox Laboratory air test chamber

NOTE - This furnace has not been CSA International design certified for installation in mobile homes, recreational vehicles, or outdoors.

California Only

- These furnaces **do not meet** the South Coast Air Quality Management District (SCAQMD) Rule 1111 and San Joaquin Valley Air Pollution Control District (SJVAPCD) Rule 4905 NOx emission limit (14 ng/J) and cannot be installed within the SCAQMD, SJVAPCD and Bay Area
- These furnaces are approved by the California Energy Commission and meets California Nitrogen Oxides Standard (NOx) limits of 40 ng/J

WARRANTY

- Duralok Plus™ Aluminized Steel Heat Exchanger:
  - Limited twenty years in residential applications
  - Limited ten years in non-residential applications
- All other covered components:
  - Limited five years in residential installations
  - Limited one year in non-residential installations

NOTE - Refer to Lennox® Basic Limited Warranty at www.Lennox.com for additional details.

FEATURES

APPLICATIONS

- Input capacities of 44,000, 66,000, 88,000 and 110,000 Btuh
- Energy efficiency (AFUE) - 96%
- Compact cabinet for upflow, horizontal-left or horizontal-right applications without any modifications
- Variable speed blower is ideal for zoning applications
- Removable bottom seal panel shipped in place for side return air is easily removed for bottom/end return air applications
- Utility room, alcove, closet, crawl space, basement or attic installation
- Lennox add-on indoor coils, high-efficiency air cleaners and humidifiers can easily be added to furnace
- Shipped factory assembled with all controls installed and wired
- Each unit factory test operated to ensure proper operation

ZONING APPLICATIONS

- Units may be used with certain zoning systems
- Zone control panel must be able to interface and communicate with the variable speed blower motor in the unit
- Lennox® LZSV Variable Zoning System has this capability

HEATING SYSTEM

1 Lennox Duralok Plus™ Heat Exchanger Assembly

- Lennox developed heat exchanger assembly consists of primary heat exchanger and secondary condenser coil assembly
- Main multi-pass crimped seam design clamshell type
- Constructed of heavy-gauge, aluminized steel
- Designed for normal expansion and contraction with maximum efficiency and minimum resistance to air flow

2
- Secondary heat exchanger condenser coil constructed of aluminum fins fitted to stainless steel tubes
- Coil is factory tested for leaks
- Condensate drain header box assembly located on front of coil
- Compact size permits low overall design of furnace cabinet
- Laboratory life cycle tested in excess of industry standards

HEATING SYSTEM (continued)

Lennox Designed Header Box
- Header box on end of condenser coil collects flue condensate for disposal through condensate drains
- Drains are located on each side of the cabinet for easy field installation of condensate drain trap
- Only one drain is used, the other drain is sealed
- Condensate drain trap is included with the unit for field installation

Lennox Designed Flue Condensate Trap Assembly
- Field installed outside the conditioned air stream
- Assembly can be mounted on either side of cabinet in upflow applications
- Assembly is mounted below the cabinet in horizontal applications
- Assembly can be mounted remotely (up to 5 ft. away) from unit
- See Dimension Drawing and Installation Instructions
- 90° street elbow furnished for ease of drain trap installation
- Drain connection can be made with field provided PVC pipe, PVC coupling, or vinyl tubing with hose clamp
- Drain cap on trap allows easy cleaning and winterizing

3 Inshot Burners
- Aluminized steel inshot burners provide efficient, trouble-free operation
- Burner venturi mixes air and gas in correct proportion for proper combustion
- Burner assembly can be removed from the unit as a single component for ease of service

4 SureLight® Hot Surface Ignitor
- Tough, reliable, long-life, trouble-free performance
- Silicon nitride ignitor
- Cemented to steatite block for protection against current leakage
- Ignition leads are constructed of nickel plated copper and are enclosed in high temperature Teflon® insulation for dependable operation

5 Two-Stage Gas Control Valve
- 24 volt redundant combination two-stage gas control valve combines manual shut off switch (On-Off), automatic electric valve (dual) and gas pressure regulation into a compact combination control

6 Two-Speed Combustion Air Inducer
- Permanent split capacitor (PSC) motor
- Heavy duty blower prepurges heat exchanger and safely vents flue products
- Dual pressure switches (low fire/high fire) prove blower operation before allowing gas valve to open
- Operates only during heating cycle

7 Flame Rollout Switches (2)
- Factory installed on burner box
- Switch provides protection from abnormal operating conditions
- Manual reset

Limit Control
- Primary limit is accurately located on vestibule panel on all units
- Automatic reset

Optional Accessories

High Altitude Orifice Kits
- Required on all units for proper unit operation at altitudes from 7501 to 10,000 ft.
- Kits are available for natural gas and LPG/propane

High Altitude Pressure Switch Kit
- Required for proper unit operation on installations above 4500 ft.

Natural Gas to LPG/Propane Conversion Kit
- Required for field changeover from natural gas to LPG/Propane

LPG/Propane to Natural Gas Conversion Kit
- Required for field changeover from LPG/Propane to natural gas

Muffler (US Only)
- Significantly reduces outdoor operating sound levels
- Two-inch diameter muffler is optional for 070 through 110 input models

NOTE - Two-inch muffler is optional for the 110 input model with a maximum vent pipe length of up to 29 ft.
Three-inch diameter muffler is optional for 110 and 135 input models.

NOTE - Three-inch muffler is optional for the 110 input model with a minimum vent pipe length of 30 ft.

- Installed vertically in the exhaust piping
- See Optional Accessory Dimension Drawing

DIRECT VENT / NON-DIRECT VENT SEALED COMBUSTION SYSTEM

- Furnace features a “sealed combustion” system and can be installed in either Direct Vent or Non-Direct applications
- In Direct Vent applications, combustion air is supplied from outdoors and flue gases are discharged outdoors
- In Non-Direct Vent applications, combustion air is supplied from indoors and flue gases are discharged outdoors

NOTE - Lennox has approved the use of DuraVent® PolyPro® and Centrotherm InnoFlue® manufactured vent pipe and terminations as an alternative to PVC vent pipe. Must be ordered separately.

- Tested and listed to the ULC S636 standard in Canada

DIRECT VENT / NON-DIRECT VENT SEALED COMBUSTION SYSTEM (continued)

- The polypropylene venting system must follow the uninsulated and unconditioned space vent lengths listed in the table on 12
- Refer to the Installation Instructions for additional details

Flue Coupling

- Assists with exhaust flue piping connection and servicing
- Includes flexible one 2 inch rubber coupling and two adjustable bands
- Approved for all Lennox 90% furnaces

Termination Kits

- Facilitates installation of combustion air intake pipe and flue exhaust pipe
- Refer to venting table in this bulletin to determine pipe size needed and proper termination kit required
- Certain Termination Kits are certified to ULC S636 standard for use in Canada only
- See Optional Accessories table and dimension drawings

Concentric - Direct Vent Applications

- 2 or 3 inch kit contains concentric termination assembly, reducer bushing and 45 degree elbow
- 2 inch kit for -045-070 models contains an outdoor exhaust accelerator
- Kit requires single hole penetration of roof or wall for installation
- Roof Termination Flashing Kit is available for use with 2 inch Kits
- CSA certified

Flush-Mount

- Kit contains flush-mount termination, accelerator, mounting template and hardware
- Kit may be used with 2, 2-1/2 or 3 in. pipe

Wall Assembly
Close Couple (US Only) - Direct Vent Applications

- 2 or 3 inch kit consists of close-couple, side-by-side PVC piping with galvanized steel wall cover plate for sealing and isolating piping penetration of the wall
- Piping spacing and length is sized for proper wall installations
- CSA certified

Close Couple WTK (Canada Only) - Direct Vent Applications

- 2 or 3 inch kit contains one insulated faceplate, one insulated exhaust pipe, elbow and fittings. Certified to ULC S636 standard

NOTE - Maintain a maximum of 6 inches between the inlet and outlet openings in the installation of the pipes

Roof Termination Flashing Kit

- For vertical venting through a roof
- 2 or 3 inch kit contains two neoprene rubber roof flashings
- Vent pipe and insulation not furnished
- Flashing Kit can also be used with Concentric Vent Termination Kits used in vertical venting rooftop applications

CONTROLS

8 SureLight® Integrated Two-Stage / Variable Speed Blower Furnace Control

- Contains all necessary controls and relays to operate furnace
- Combustion air inducer is operated by the integrated furnace control. Prior to ignition, a low speed pre-purge cycle for 15 seconds is initiated. After the main burners are turned off, a post-purge cycle for 5 seconds is run
- Flame sensor utilizes flame rectification for safe and reliable operation
- Should flame fail to ignite, control will initiate 5 re-attempts at ignition before locking out unit operation for 60 minutes
- Watchguard type circuit automatically resets ignition controls after one hour of continuous thermostat demand after unit lockout, eliminating nuisance calls for service
- Jumper settings for single or two-stage thermostat operation
  - Two selectable second stage recognition times (5 and 10 minutes) are available when the furnace is used with a single stage thermostat
  - When used with a two-stage thermostat, furnace will only initiate second stage operation with a second stage thermostat demand
- Three LED's indicate unit status and aid in troubleshooting:
  - CFM LED (amber) - Indicates blower cfm
  - STATUS LED (red) - Flashes diagnostic codes
  - HIGH HEAT LED (green) - On indicates high heat demand
- Two accessory terminals are furnished for additional power supply requirements for 120 volt (less than 1 amp) powered IAQ accessories
- Two blower speeds, second stage heat and second stage cool (with four air volume selections for each (A, B, C, D) are selected by jumpers on control
- Heat speed can be adjusted to optimize discharge temperature
- Cool speed can be adjusted to correct optional cooling capacity
- See Blower Performance tables
- First stage blower speed is a percentage of second stage speed
- The ADJUST jumper allows normal (NORM), 10% higher (+ plus) or 10% lower (– minus) motor speed selection within the HEAT and COOL speeds selected for fine tuning air volume
- Controls humidity by controlling blower and compressor speed on two-stage outdoor units when used with Lennox M30 Smart Wi-Fi Thermostat or separate humidity control

CONTROLS (continued)

- Passive Dehumidification - For situations where humidity control is a desired, a dehumidification feature is built into the variable speed motor
- Motor runs at 82% for 7-1/2 minutes and then at 100% (if needed) until demand is satisfied. Once demand is met, motor ramps down to 82% for one minute before shut off
- Active or Humiditrol® Dehumidification - A jumper on the control must be clipped to enable active dehumidification and/or operation with a Humiditrol® Whole-Home Dehumidification System
- A humidity controlling thermostat or separate humidity control is also required
  - 1st Stage Demand - Motor runs at 57% for 7-1/2 minutes of 1st stage cooling demand and then at 70% until demand is satisfied
  - 2nd Stage Demand - Motor runs at 100% of the selected cooling air flow. When the demand for cooling is met, the blower runs at 57% for 1 minute before shut off
- In heat mode, blower on time is fixed at 30 seconds (non-adjustable), blower off time is integral to ECM blower motor
- For air-conditioning applications, blower on time is 2 seconds (non-adjustable) following thermostat demand for cooling
- Control is factory installed in the unit control box

24 Volt Transformer (40VA)

- Furnished and factory installed on outside of control box
- Circuit breaker (furnished) is wired in series

Field Wiring Make-Up Box

- Furnished for line voltage wiring
- Factory installed internally on left side of furnace
- Box may be installed internally on right side of furnace

Optional Accessories

M30 Smart Wi-Fi Thermostat

- Wi-Fi-enabled, electronic 7-day, universal, multi-stage, programmable, touchscreen thermostat
- 4 Heat/2 Cool
- Auto-changeover
- Dual-fuel control with optional outdoor sensor
- Controls dehumidification during cooling mode and humidification during heating mode

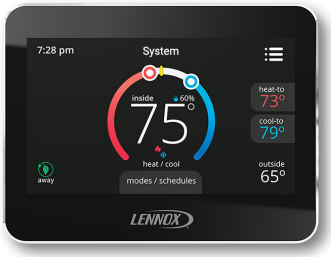

- Offers enhanced capabilities including humidification / dehumidification / dewpoint measurement and control, Humiditrol® control, and equipment maintenance reminders
- Easy to read 4.3 in. color touchscreen (measured diagonally)
- LCD display with backlight shows the current and set temperature, time, inside relative humidity, system status (operating mode and schedules) and outside temperature (optional outdoor sensor required)
- Smooth Setback Recovery starts system early to achieve setpoint at start of program period
- Compressor short-cycle protection (5 minutes)
- Up to four separate schedules are available plus Schedule IQ™
- One-Touch Away Mode - A quick and easy way to set the cooling and heating setpoints while away
- Smart Away™ - Uses geo-fencing technology to determine when the homeowner is within a predetermined distance from the home to operate the system when leaving, away and arriving
- Wi-Fi remote monitoring and adjustment through a home wireless network for desktop PCs, laptops and apps for smartphones or tablets
- Smart home automation compatible with Amazon Alexa®, Google Assistant and IFTTT
- Service Dashboard features online real-time monitoring of installed thermostats

NOTE - See the Lennox® M30 Smart Wi-Fi Thermostat Product Specifications bulletin in the Controls section for more information.

Remote Outdoor Temperature Sensor

- Used with the Lennox® M30 Smart Wi-Fi Thermostat
- Outdoor sensor allows thermostat to display outdoor temperature
- Automatically detected when connected to thermostat

NOTE - Sensor is required for the Enhanced Dehumidification Accessory (EDA)

Thermostat

- Thermostat is not furnished with unit
- Lennox Price Book for selection

Transformer (75VA)

- Recommended when furnace is used with zoning or defrost thermostats and other 24V accessories requiring a higher VA rating
- Circuit breaker (furnished) is wired in series
- Replaces the standard 40VA transformer

FEATURES

BLOWER

9 Variable Speed Direct Drive Blower
- Each blower assembly statically and dynamically balanced
- Blower assembly easily removed for servicing

Variable Speed Blower Motor
- Variable speed motor maintains specified air volume from 0 though 0.8 in. w.g. (heating) and 0 through 1.0 in. w.g. (Cooling) static range
- Variable speed operation is achieved by the use of an ECM (Electronically Commutated Motor) motor
- Motor is controlled by furnace control
- Change in blower speed is easily accomplished by simple jumper change on the furnace control
- During start-up the blower motor slowly ramps up to normal operating speed to minimize noise and increase comfort
- At the end of a cooling or heating cycle the motor slowly ramps down after a short blower "off" delay
- If continuous blower operation has been selected, the variable speed motor will slowly ramp down until it reaches the airflow for that condition
- Motor is resiliently mounted
- See Blower Data tables

CABINET

- Low-profile, narrow width allows easy installation
- Heavy-gauge, cold rolled steel construction
- Pre-painted cabinet finish
- Flanges provided on supply air opening for ease of plenum connection or alignment with indoor coil
- 10 Insulated with foil faced insulation on sides and back of heating compartment
- Sealed blower compartment
- Cabinet door can be removed without any tools
- Complete service access
- 11 Safety interlock switch automatically shuts off power to unit when blower compartment access door is removed
- 12 Gas piping and electrical inlets are provided in both sides of cabinet

Bottom/End Return Air Entry:
- Upflow/horizontal applications:
  - Remove furnished bottom seal panel from cabinet
- Side return-air entry (upflow applications only):
  - Corners are marked on either side of cabinet for return air cut-outs
- See dimension drawings

NOTE - 60C size units that require air volumes over 1800 cfm must have one of the following:
- Single side return air and Optional Return Air Base with transition that must accommodate required 20 x 25 x 1 inch air filter to maintain proper velocity
- Bottom return air
- Return air from both sides
- Bottom and one side return air
- See Blower Performance Tables for additional information

Coil Match-Up
- All furnaces exactly match Lennox cased upflow indoor coils and horizontal indoor coils with same letter designation (A, B, C, D) in model number
- No adaptor required
- Engaging holes furnished on cabinet for alignment
- Lennox uncased coils match furnaces without any overhang but require an optional adaptor base or field fabricated transition to match furnace opening
- See coil bulletin for additional information

Low Leakage Cabinet
- All models have less than 2% air leakage
- Meets ANSI/ASHRAE Standard 193-2010 "Method of Test for Determining the Air Tightness of HVAC Equipment"

Optional Accessories

Condensate Drain Heat Cable Kits
- Self-limiting wattage heat cable prevents condensate drain from freezing in unconditioned areas
- Available in 6 or 24 ft. lengths

Horizontal Suspension Kit
- Provides suspension of unit and indoor coil in horizontal applications
- Allows complete service access
- Consists of corner mounted hanging brackets with vibration isolators, return air end support rail and hardware for assembly
- Metal hanging straps must be field provided

Crawl Space Vent Drain Kit
- Allows venting through a crawl space for upflow and horizontal applications
- Kit for Canada is certified to ULC S636
- Includes 2 or 3 inch sanitary tee, 2 inch PVC assembly, PVC boot and clamp

Return Air Base

NOTE - On furnaces with side return air and condensate trap on the same side of the cabinet, a field fabricated transition or Return Air Base is required when using an IAQ product higher than 14-3/16 inches installed next to the unit and serviced from the front. IAQ products higher than 20 inches require a field fabricated transition.

NOTE - Must be used for 60C and 60D size models with air volumes over 1800 cfm in upflow applications when only one side return is required.
- Cabinet is shipped flat for easy field assembly
- Pre-painted steel to match the furnace
- See Dimension Drawing

FEATURES

CABINET (continued)

Optional Accessories (continued)

High Performance Economizer
(Commercial Applications Only)

- Designed for applications requiring outdoor air to be utilized in a commercial HVAC system. Allows the entry of fresh outdoor air for free cooling, reducing the requirement for mechanical cooling
- Heavy gauge galvanized steel cabinet lined with thick fiberglass insulation. Mixed air sensor, outdoor air sensor and 24VAC transformer furnished.
- Approved for California Title 24 building standards. ASHRAE 90.1-2010 compliant
- See separate Product Specifications bulletin for additional information and available control and sensor options

FILTER (not furnished)

- Filter and provisions for external mounting must be field provided

Optional Accessories

Air Filter and Rack Kit for Horizontal Return Air (End) Applications

- Washable or vacuum cleanable polyurethane frame type filter and external end return air rack
- Rack has filter door for servicing
- Flanges on rack for duct connection
- Field installed
- See dimension drawing

Air Filter and Rack Kit for Upflow Side Return Air
NOTE - Not for use with Return Air Base

- Washable or vacuum cleanable polyurethane frame type filter and external side return air rack available for field installation
- Available in single and ten pack kits
- Rack has filter door for servicing
- Flanges on rack for duct connection
- Field installs on either side of unit cabinet
- See dimension drawing

REFRIGERATION DETECTION SYSTEM (RDS)

Optional Accessories

Refrigerant Detection System (RDS) Coil Sensor Kit

- Complies with UL 60335-2-40 approved standard
- Required for field installation for all systems using R-454B refrigerant if sensor is not furnished with coil
- Consists of Refrigerant Detection System (RDS) sensor, lineset sleeves, mounting brackets and A2L labeling
- Sensor ensures safe operation for systems equipped with R-454B refrigerant
- Sensor will detect anu R-454B refrigerant

Refrigerant Detection System (RDS) Blower Control Board

Communicating Blower Control Board (Universal)

- Communicating Blower Control Board and Sensor can be used universally with any Lennox® communicating furnace or any non-communicating 24 volt furnace

Non-Communicating Blower Control Board

- Non-Communicating Blower Control Board and Sensor can be used with any non-communicating 24 volt furnace

Standard Features

- Complies with UL 60335-2-40 approved standard
- Required for all systems using R-454B refrigerant
- Connects to the RDS sensor furnished with the RDS Coil Sensor Kit
- Supports up to two RDS Sensors (factory setting)
- Used as an interface between indoor unit and thermostat to control system
- Ensures safe operation for systems equipped with R-454B refrigerant
- If R-454B refrigerant is detected, the refrigerant detection system will stop compressor and/or heating operating and operate the blower to reduce concentrations in the conditioned space
- Once safe levels are reached the HVAC system will resume normal operation
- Multi-color LED for system status and as an aid in troubleshooting
  - Flashing LED codes for system status (Green/Blue) and diagnosing Sensor errors (Red)
- Alarm relay can trigger an external alarm if R-454B refrigerant is detected
- Zone relay opens all zone dampers (if part of a zoning system) if R-454B refrigerant is detected
- Power is disabled to non-communicating thermostats to prevent demand if R-454B refrigerant is detected
- On system start-up blower will run for five minutes and any thermostat demands are disabled
- Dimensions (H x W x D): 7-7/16 x 7-7/16 x 2-1/2 (189 x 189 x 127 mm)

NOTE - See Refrigerant Detection System (RDS) Components Table on page 9.

See the CK40 Indoor Coil Product Specifications bulletins for more information.

Refer to the Installation Instructions for additional information.

GAS HEAT ACCESSORIES

Input	High Altitude Pressure Switch Kit		Natural Gas to LPG/Propane Kit	LPG/Propane to Natural Gas Kit	Natural Gas High Altitude Orifice Kit	LPG/Propane High Altitude Orifice Kit	Muffler (US Only)
	4501 - 7500 ft.	7501 - 10,000 ft.	0 - 7500 ft.	0 - 7500 ft.	7501 - 10,000 ft.	7501 - 10,000 ft.	
045	14A47	14A50	11K51	77W09	73W37	11K46	15Y66 (2-inch)
070	14A54	14A53	11K51	77W09	73W37	11K46	15Y66 (2-inch)
090	14A57	14A54	11K51	77W09	73W37	11K46	15Y66 (2-inch)
110	14A46	14A51	11K51	77W09	73W37	11K46	[1] 15Y66 (2-inch) 16A56 (3-inch)

[1] Two-inch diameter muffler (**15Y66**) is optional for 110 input model with a maximum vent pipe length of up to 29 ft.
Three-inch diameter muffler (**16A56**) is optional for 110 input model with a minimum vent pipe length of 30 ft.

REFRIGERANT DETECTION SYSTEM (RDS) COMPONENTS

Description		Order No.
Refrigerant Detection System (RDS) Coil Sensor Kit		**26Z69**
Refrigerant Detection System (RDS) Blower Control Board	Any Lennox® Communicating Furnace or any Non-Communicating 24V Furnace (Universal)	**27A03**
	Any Non-Communicating 24V Furnace	**27A02**

NOTE - Communicating Blower Control Board and Sensor can be used universally with Lennox® communicating furnace or any non-communicating 24 volt furnace.
Non-Communicating Blower Control Board and Sensor can be used with any non-communicating 24 volt furnace.

HIGH ALTITUDE DERATE

NOTE - Units may be installed at altitudes up to 10,000 ft.
At altitudes above 4501 ft. the unit must be derated to match the manifold pressure information shown below.
Units installed at altitudes of 4501 to 10,000 ft. require a pressure switch change.
Units installed at altitudes of 7501 to 10,000 ft. require an orifice change.
See the Gas Heat Accessories table for ordering information.

NOTE - This is the only permissible derate for these units.

NOTE - In Canada, certification for installations at elevations over 4500 feet is the jurisdiction of local authorities.

Input	Gas	Manifold Pressure in. w.g.										Supply Line Pressure in. w.g. 0 - 10,000 ft.	
		0 - 4500 ft.		4501 - 5500 ft.		5501 - 6500 ft.		6501 - 7500 ft.		7501 - 10,000 ft.			
		Low Fire	High Fire	Low Fire	High Fire	Low Fire	High Fire	Low Fire	High Fire	Low Fire	High Fire	Min.	Max.
All Sizes	Natural	1.7	3.5	1.6	3.3	1.5	3.2	1.5	3.1	1.7	3.5	4.5	13.0
	LPG/Propane	4.5	10.0	4.2	9.4	4.0	9.1	3.9	8.9	4.5	10.0	11.0	13.0

SPECIFICATIONS

		Model No.	ML296UH045XV36B	ML296UH070XV36B
Gas Heating Performance		[1] AFUE	96%	96%
	High Fire	Input - Btuh	44,000	66,000
		Output - Btuh	42,000	62,000
		Temperature rise range - °F	35 - 65	50 - 80
		Gas Manifold Pressure (in. w.g.) Nat. Gas / LPG/Propane	3.5 / 10.0	3.5 / 10.0
	Low Fire	Input - Btuh	29,000	43,000
		Output - Btuh	28,000	41,000
		Temperature rise range - °F	20 - 50	25 - 55
		Gas Manifold Pressure (in. w.g.) Nat. Gas / LPG/Propane	1.7 / 4.5	1.7 / 4.5
High static - in. w.g.		Heating	0.8	0.8
		Cooling	1.0	1.0
Connections in.		Intake / Exhaust Pipe (PVC)	2 / 2	2 / 2
		Gas pipe size IPS	1/2	1/2
		Condensate Drain Trap (PVC pipe) - i.d.	3/4	3/4
		with furnished 90° street elbow	3/4 slip x 3/4 Mipt	3/4 slip x 3/4 Mipt
		with field supplied (PVC coupling) - o.d.	3/4 slip x 3/4 MPT	3/4 slip x 3/4 MPT
Indoor Blower		Wheel nominal diameter x width - in.	10 x 9	10 x 9
		Motor output - hp	1/2	1/2
		Tons of add-on cooling	2 - 3	2 - 3
		Air Volume Range - cfm	485 - 1370	500 - 1365
Electrical Data		Voltage	120 volts - 60 hertz - 1 phase	
		Blower motor full load amps	7.7	7.7
		Maximum overcurrent protection	15	15
Shipping Data		lbs. - 1 package	130	138

NOTE - Filters and provisions for mounting are not furnished and must be field provided.

[1] Annual Fuel Utilization Efficiency based on DOE test procedures and according to FTC labeling regulations. Isolated combustion system rating for non-weatherized furnaces.

SPECIFICATIONS

		Model No.	ML296UH090XV48C	ML296UH110XV60C
Gas Heating Performance		[1] AFUE	96%	96%
	High Fire	Input - Btuh	88,000	110,000
		Output - Btuh	85,000	106,000
		Temperature rise range - °F	45 - 75	45 - 75
		Gas Manifold Pressure (in. w.g.) Nat. Gas / LPG/Propane	3.5 / 10.0	3.5 / 10.0
	Low Fire	Input - Btuh	57,000	72,000
		Output - Btuh	55,000	70,000
		Temperature rise range - °F	30 - 60	35 - 65
		Gas Manifold Pressure (in. w.g.) Nat. Gas / LPG/Propane	1.7 / 4.5	1.7 / 4.5
High static - in. w.g.		Heating	0.8	0.8
		Cooling	1.0	1.0
Connections in.		Intake / Exhaust Pipe (PVC)	2 / 2	2 / 2
		Gas pipe size IPS	1/2	1/2
		Condensate Drain Trap (PVC pipe) - i.d.	3/4	3/4
		with furnished 90° street elbow	3/4 slip x 3/4 Mipt	3/4 slip x 3/4 Mipt
		with field supplied (PVC coupling) - o.d.	3/4 slip x 3/4 MPT	3/4 slip x 3/4 MPT
Indoor Blower		Wheel nominal diameter x width - in.	11 x 11	11 x 11
		Motor output - hp	3/4	1
		Tons of add-on cooling	2.5 - 4	3 - 5
		Air Volume Range - cfm	680 - 1770	790 - 1955
Electrical Data		Voltage	120 volts - 60 hertz - 1 phase	
		Blower motor full load amps	10.1	12.8
		Maximum overcurrent protection	15	20
Shipping Data		lbs. - 1 package	163	174

NOTE - Filters and provisions for mounting are not furnished and must be field provided.

[1] Annual Fuel Utilization Efficiency based on DOE test procedures and according to FTC labeling regulations. Isolated combustion system rating for non-weatherized furnaces.

OPTIONAL ACCESSORIES

NOTE - FURNACES CANNOT BE TWINNED!

			"B" Width Models	"C" Width Models
CABINET ACCESSORIES				
Horizontal Suspension Kit - Horizontal only			**51W10**	**51W10**
Return Air Base - Upflow only			**50W98**	**50W99**
High Performance Economizer (Commercial Only)			**10U53**	**10U53**
CONDENSATE DRAIN KITS				
Condensate Drain Heat Cable		6 ft.	**26K68**	**26K68**
		24 ft.	**26K69**	**26K69**
Crawl Space Vent Drain Kit		US	**51W18**	**51W18**
		Canada	**15Z70**	**15Z70**
CONTROLS				
M30 Smart Wi-Fi Thermostat			**15Z69**	**15Z69**
[1] Remote Outdoor Temperature Sensor			**X2658**	**X2658**
Transformer (75VA)			**27J32**	**27J32**
FILTER KITS				
[2] Air Filter and Rack Kit	**Horizontal (end)**		**87L96**	**87L97**
		Size of filter - in.	18 x 25 x 1	20 x 25 x 1
	Side Return	Single	**44J22**	**44J22**
		Ten Pack	**66K63**	**66K63**
		Size of filter - in.	16 x 25 x 1	16 x 25 x 1
TERMINATION KITS				
See Installation Instructions for specific venting information.				
Direct Vent	Concentric	US - 2 in.	**71M80**	**69M29**
		3 in.	**- - -**	**60L46**
		Canada - 2 in.	**44W92**	**44W92**
		3 in.	**- - -**	**44W93**
	Flush-Mount	US - 2, 2-1/2 or 3 in.	**51W11**	**51W11**
		Canada - 2, 2-1/2 or 3 in.	**51W12**	**51W12**
	Wall - Close Couple	US - 2 in.	**22G44**	**- - -**
		3 in.	**44J40**	**44J40**
	Wall - Close Couple WTK	Canada - 2 in.	**30G28**	**- - -**
		3 in.	**81J20**	**81J20**
	Roof Termination Flashing Kit (no vent pipe - 2 flashings)	2 in.	**15F75**	**15F75**
		3 in.	**44J41**	**44J41**
VENTING				
Flue Coupling		2 in.	**17H92**	**17H92**

[1] Cleanable polyurethane, frame-type filter.

[2] Allows the thermostat to display outdoor temperature. Required in dual-fuel and EDA applications.

NOTE - Termination Kits (**44W92**, **44W93**, **30G28**, **51W12**, **81J20**) and Crawl Space Vent Drain Kit (**15Z70**) are certified to ULC S636 standard for use in Canada only.

INSTALLATION CLEARANCES

Sides	[1] 0 inches (0 mm)
Rear	0 inches (0 mm)
Top/Plenum	1 inch (25 mm)
Front	0 inches (0 mm)
Front (service/alcove)	24 inches (610 mm)
Floor	[2] Combustible

NOTE − Air for combustion must conform to the methods outlined in the National Fuel Gas Code (NFPA 54/ANSI−Z223.1) or the National Standard of Canada CAN/CSA−B149.1 Natural Gas and Propane Installation Code".

NOTE − In the U.S. flue sizing must conform to the methods outlined in the current National Fuel Gas Code (NFPA 54/ANSI−Z223.1) or applicable provisions of local building codes. In Canada flue sizing must conform to the methods outlined in National Standard of Canada CAN/CSA−B149.1.

[1] Allow proper clearances to accommodate condensate trap and vent pipe installation.

[2] Do not install the furnace directly on carpeting, tile, or other combustible materials other than wood flooring.

OUTDOOR TERMINATION KIT USAGE

Input Size	Vent Pipe Diameter (in.)	Standard Terminations				Concentric Terminations		
		Flush Mount Kit	Wall Kit		Field Fabricated Exhaust Accelerator Size Required	Concentric Kit		
			2 inch	3 inch		1-1/2 inch	2 inch	3 inch
		51W11 (US) [5] 51W12 (CA)	22G44 (US) [5] 30G28 (CA)	44J40 (US) [5] 81J20 (CA)		71M80 (US) [5] 44W92 (CA)	69M29 (US) [5] 44W92 (CA)	60L46 (US) [5] 44W93 (CA)
045	[1] 1-1/2	[4] YES	YES	[2] YES	1-1/2 in.	[3] YES	- - -	- - -
	2	[4] YES	YES	[2] YES	1-1/2 in.	[3] YES	- - -	- - -
	2-1/2	[4] YES	YES	[2] YES	1-1/2 in.	[3] YES	- - -	- - -
	3	[4] YES	YES	[2] YES	1-1/2 in.	[3] YES	- - -	- - -
070	[1] 1-1/2	[4] YES	YES	[2] YES	1-1/2 in.	[3] YES	- - -	- - -
	2	[4] YES	YES	[2] YES	1-1/2 in.	[3] YES	- - -	- - -
	2-1/2	[4] YES	YES	[2] YES	1-1/2 in.	[3] YES	- - -	- - -
	3	[4] YES	YES	[2] YES	1-1/2 in.	[3] YES	- - -	- - -
090	2	[4] YES	- - -	YES	2 in.	- - -	YES	YES
	2-1/2	[4] YES	- - -	YES	2 in.	- - -	YES	YES
	3	[4] YES	- - -	YES	2 in.	- - -	YES	YES
110	2	YES	- - -	YES	2 in.	- - -	YES	YES
	2-1/2	YES	- - -	YES	2 in.	- - -	YES	YES
	3	YES	- - -	YES	2 in.	- - -	YES	YES

NOTE - Standard Terminations do not include any vent pipe or elbows external to the structure.
Any vent pipe or elbows external to the structure must be included in total vent length calculations. See Vent Length Tables.

[1] 2 in. to 1-1/2 in. reducer required, must be field provided.

[2] Requires field provided 1-1/2 in. outdoor exhaust accelerator.

[3] Concentric Kits **71M80** and **44W92** include 1-1/2 in. outdoor exhaust accelerator, required when used with 045 and 070 input models. Accelerator is not used with 090, 110, 135 input models. When using 1-1/2 in. piping, the pipe must be transitioned to 2 in. pipe when used with the Concentric Kit.

[4] Flush Mount Kit **51W11** and **51W12** includes 1-1/2 in. outdoor exhaust accelerator, required when used with 045, 070 and 090 input models. Accelerator is not used with 110 or 135 input models. When using 1-1/2 in. piping, the pipe must be transitioned to 2 in. pipe when used with the Flush Mount Kit.

[5] Termination Kits 30G28, **44W92**, **44W93**, **51W12** and **81J20** are certified to ULC S636 standard for use in Canada only.

VENT LENGTHS - UNINSULATED EXHAUST PIPE IN UNCONDITIONED SPACE

[1] Winter Design Temperatures	Vent Pipe Diameter	Unit Input Size							
		045		070		090		110	
		[2] Maximum Uninsulated Exhaust Vent Length (ft.)							
		PVC	PolyPro InnoFlue	PVC	PolyPro InnoFlue	PVC	PolyPro InnoFlue	PVC	PolyPro InnoFlue
32 to 21°F	1-1/2 in.	22	N/A	25	N/A	N/A	N/A	N/A	N/A
	2 in.	21	18	33	30	46	42	30	30
	2-1/2 in.	16	N/A	26	N/A	37	N/A	36	N/A
	3 in.	12	12	21	21	30	30	29	29
20 to 1°F	1-1/2 in.	12	N/A	20	N/A	N/A	N/A	N/A	N/A
	2 in.	11	9	19	17	28	25	27	24
	2-1/2 in.	7	N/A	14	N/A	21	N/A	20	N/A
	3 in.	N/A	N/A	9	9	16	16	14	14
0 to –20°F	1-1/2 in.	8	N/A	13	N/A	N/A	N/A	N/A	N/A
	2 in.	6	4	12	10	19	16	18	15
	2-1/2 in.	N/A	N/A	7	N/A	13	N/A	12	N/A
	3 in.	N/A	N/A	N/A	N/A	8	8	7	7

[1] Refer to 99% Minimum Design Temperature table provided in the current edition of the ASHRAE Handbook-Fundamentals.

[2] Maximum Equivalent Vent Length permitted is defined as Total Length (linear feet) of vent pipe, plus equivalent length (ft.) of fittings, plus equivalent length (ft.) of termination.

VENTING NOTES - Concentric Terminations are equivalent to 5 ft. of straight pipe and should be included when measuring total pipe length.
One 90° elbow is equivalent to 5 feet of straight vent pipe.
Two 45° elbows are equal to one 90° elbow.
One 45° elbow is equivalent to 2.5 feet of straight vent pipe.

PolyPro® poly-propylene vent pipe is a registered trademark of DuraVent®.

Innoflue® is a registered trademark of Centrotherm Eco Systems.

VENT LENGTHS - FEET

STANDARD TERMINATION AT ELEVATION 0 - 4500 ft.

Pipe Size		1-1/2 in.				2 in.				2-1/2 in.				3 in.			
Input		045	070	090	110	045	070	090	110	045	070	090	110	045	070	090	110
No. of 90 ELL	1	25	20	N/A	N/A	81	66	44	24	115	115	93	58	138	137	118	118
	2	20	15	N/A	N/A	76	61	39	19	110	110	88	53	133	132	113	113
	3	15	10	N/A	N/A	71	56	34	14	105	105	83	48	128	127	108	108
	4	10	N/A	N/A	N/A	66	51	29	N/A	100	100	78	43	123	122	103	103
	5	N/A	N/A	N/A	N/A	61	46	24	N/A	95	95	73	38	118	117	98	98
	6	N/A	N/A	N/A	N/A	56	41	19	N/A	90	90	68	33	113	112	93	93
	7	N/A	N/A	N/A	N/A	51	36	14	N/A	85	85	63	28	108	107	88	88
	8	N/A	N/A	N/A	N/A	46	31	N/A	N/A	80	80	58	23	103	102	83	83
	9	N/A	N/A	N/A	N/A	41	26	N/A	N/A	75	75	53	18	98	97	78	78
	10	N/A	N/A	N/A	N/A	36	21	N/A	N/A	70	70	48	13	93	92	73	73

STANDARD TERMINATION ELEVATION 4501 - 10,000 ft.

Pipe Size		1-1/2 in.				2 in.				2-1/2 in.				3 in.			
Input		045	070	090	110	045	070	090	110	045	070	090	110	045	070	090	110
No. of 90 ELL	1	25	20	N/A	N/A	81	66	44	N/A	115	115	93	58	138	137	118	118
	2	20	15	N/A	N/A	76	61	39	N/A	110	110	88	53	133	132	113	113
	3	15	10	N/A	N/A	71	56	34	N/A	105	105	83	48	128	127	108	108
	4	10	N/A	N/A	N/A	66	51	29	N/A	100	100	78	43	123	122	103	103
	5	N/A	N/A	N/A	N/A	61	46	24	N/A	95	95	73	38	118	117	98	98
	6	N/A	N/A	N/A	N/A	56	41	19	N/A	90	90	68	33	113	112	93	93
	7	N/A	N/A	N/A	N/A	51	36	14	N/A	85	85	63	28	108	107	88	88
	8	N/A	N/A	N/A	N/A	46	31	N/A	N/A	80	80	58	23	103	102	83	83
	9	N/A	N/A	N/A	N/A	41	26	N/A	N/A	75	75	53	18	98	97	78	78
	10	N/A	N/A	N/A	N/A	36	21	N/A	N/A	70	70	48	13	93	92	73	73

CONCENTRIC TERMINATION AT ELEVATION 0 - 4500 ft.

Pipe Size		1-1/2 in.				2 in.				2-1/2 in.				3 in.			
Input		045	070	090	110	045	070	090	110	045	070	090	110	045	070	090	110
No. of 90 ELL	1	20	15	N/A	N/A	73	58	42	22	105	105	89	54	121	121	114	114
	2	15	10	N/A	N/A	68	53	37	17	100	100	84	49	116	116	109	109
	3	10	N/A	N/A	N/A	63	48	32	12	95	95	79	44	111	111	104	104
	4	N/A	N/A	N/A	N/A	58	43	27	N/A	90	90	74	39	106	106	99	99
	5	N/A	N/A	N/A	N/A	53	38	22	N/A	85	85	69	34	101	101	94	94
	6	N/A	N/A	N/A	N/A	48	33	17	N/A	80	80	64	29	96	96	89	89
	7	N/A	N/A	N/A	N/A	43	28	12	N/A	75	75	59	24	91	91	84	84
	8	N/A	N/A	N/A	N/A	38	23	N/A	N/A	70	70	54	19	86	86	79	79
	9	N/A	N/A	N/A	N/A	33	18	N/A	N/A	65	65	49	14	81	81	74	74
	10	N/A	N/A	N/A	N/A	28	13	N/A	N/A	60	60	44	N/A	76	76	69	69

CONCENTRIC TERMINATION ELEVATION 4501 - 10,000 ft.

Pipe Size		1-1/2 in.				2 in.				2-1/2 in.				3 in.			
Input		045	070	090	110	045	070	090	110	045	070	090	110	045	070	090	110
No. of 90 ELL	1	20	15	N/A	N/A	73	58	42	N/A	105	105	89	54	121	121	114	114
	2	15	10	N/A	N/A	68	53	37	N/A	100	100	84	49	116	116	109	109
	3	10	N/A	N/A	N/A	63	48	32	N/A	95	95	79	44	111	111	104	104
	4	N/A	N/A	N/A	N/A	58	43	27	N/A	90	90	74	39	106	106	99	99
	5	N/A	N/A	N/A	N/A	53	38	22	N/A	85	85	69	34	101	101	94	94
	6	N/A	N/A	N/A	N/A	48	33	17	N/A	80	80	64	29	96	96	89	89
	7	N/A	N/A	N/A	N/A	43	28	12	N/A	75	75	59	24	91	91	84	84
	8	N/A	N/A	N/A	N/A	38	23	N/A	N/A	70	70	54	19	86	86	79	79
	9	N/A	N/A	N/A	N/A	33	18	N/A	N/A	65	65	49	14	81	81	74	74
	10	N/A	N/A	N/A	N/A	28	13	N/A	N/A	60	60	44	N/A	76	76	69	69

VENT LENGTHS (EXHAUST) - VENTILATED ATTIC OR CRAWLSPACE INTAKE AIR - FEET

STANDARD TERMINATION AT ELEVATION 0 - 4500 ft.

Pipe Size		1-1/2 in.				2 in.				2-1/2 in.				3 in.			
	Input	045	070	090	110	045	070	090	110	045	070	090	110	045	070	090	110
No. of 90 ELL	1	20	15	N/A	N/A	71	56	34	14	100	100	78	43	118	117	98	98
	2	15	10	N/A	N/A	66	51	29	9	95	95	73	38	113	112	93	93
	3	10	N/A	N/A	N/A	61	46	24	4	90	90	68	33	108	107	88	88
	4	N/A	N/A	N/A	N/A	56	41	19	N/A	85	85	63	28	103	102	83	83
	5	N/A	N/A	N/A	N/A	51	36	14	N/A	80	80	58	23	98	97	78	78
	6	N/A	N/A	N/A	N/A	46	31	9	N/A	85	75	63	18	93	92	73	73
	7	N/A	N/A	N/A	N/A	41	26	4	N/A	70	70	48	13	88	87	68	68
	8	N/A	N/A	N/A	N/A	36	21	N/A	N/A	65	65	43	8	83	82	63	63
	9	N/A	N/A	N/A	N/A	31	16	N/A	N/A	60	60	38	3	78	77	58	58
	10	N/A	N/A	N/A	N/A	26	11	N/A	N/A	55	55	33	N/A	73	72	53	53

STANDARD TERMINATION ELEVATION 4501 - 10,000 ft.

Pipe Size		1-1/2 in.				2 in.				2-1/2 in.				3 in.			
	Input	045	070	090	110	045	070	090	110	045	070	090	110	045	070	090	110
No. of 90 ELL	1	20	15	N/A	N/A	71	56	34	N/A	100	100	78	43	118	117	98	98
	2	15	10	N/A	N/A	66	51	29	N/A	95	95	73	38	113	112	93	93
	3	10	N/A	N/A	N/A	61	46	24	N/A	90	90	68	33	118	107	88	88
	4	N/A	N/A	N/A	N/A	56	41	19	N/A	85	85	63	28	113	102	83	83
	5	N/A	N/A	N/A	N/A	51	36	14	N/A	80	80	58	23	98	97	78	78
	6	N/A	N/A	N/A	N/A	46	31	9	N/A	85	85	53	18	93	92	73	73
	7	N/A	N/A	N/A	N/A	41	26	4	N/A	70	70	48	13	98	87	68	68
	8	N/A	N/A	N/A	N/A	36	21	N/A	N/A	65	65	43	8	93	82	63	63
	9	N/A	N/A	N/A	N/A	31	16	N/A	N/A	60	60	38	3	78	77	58	58
	10	N/A	N/A	N/A	N/A	26	11	N/A	N/A	55	55	33	N/A	73	72	53	53

DIMENSIONS - UNIT - UPFLOW POSITION

[1] NOTE - 60C size units that require air volumes over 1800 cfm must have one of the following:
1. Single side return air and Optional Return Air Base with transition that must accommodate required 20 x 25 x 1 inch (508 x 635 x 25 mm) air filter to maintain proper velocity.
2. Bottom return air.
3. Return air from both sides.
4. Bottom and one side return air.

See Blower Performance Tables for additional information.

[2] Optional Side Return Air Filter Kit is not for use with the Optional Return Air Base.

Flue Condensate Trap Assembly
Furnished for external field installation on either side of unit. (See installation instructions for additional information.)

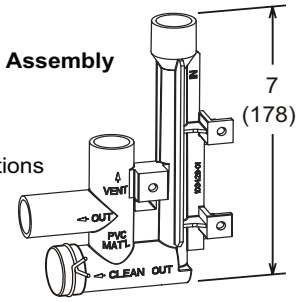

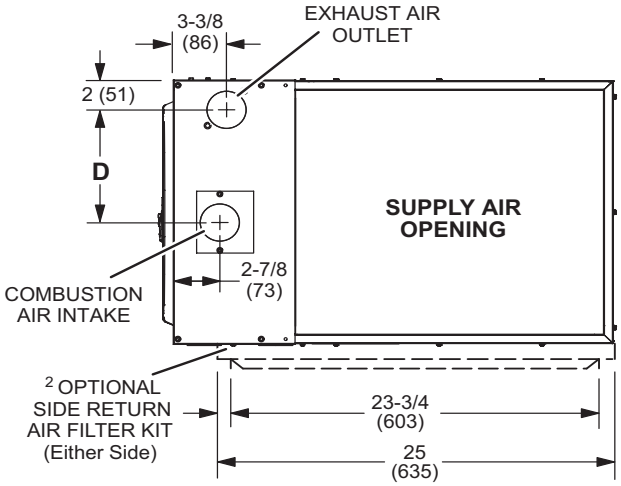

TOP VIEW

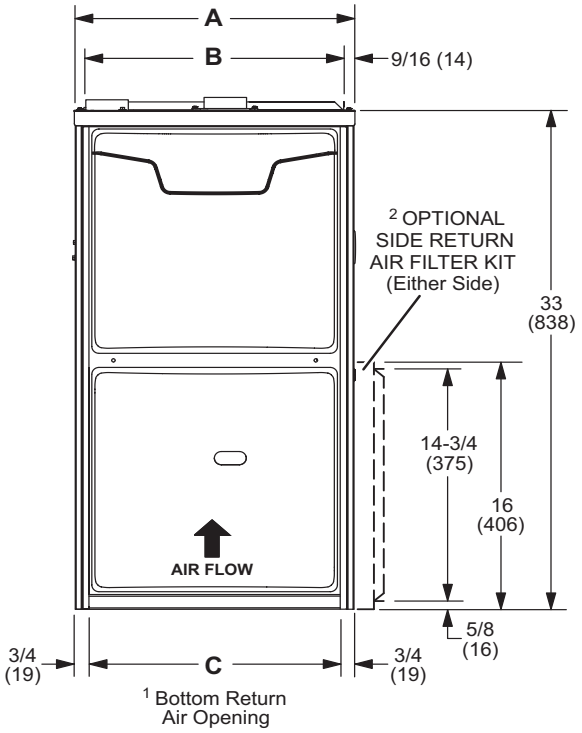

FRONT VIEW

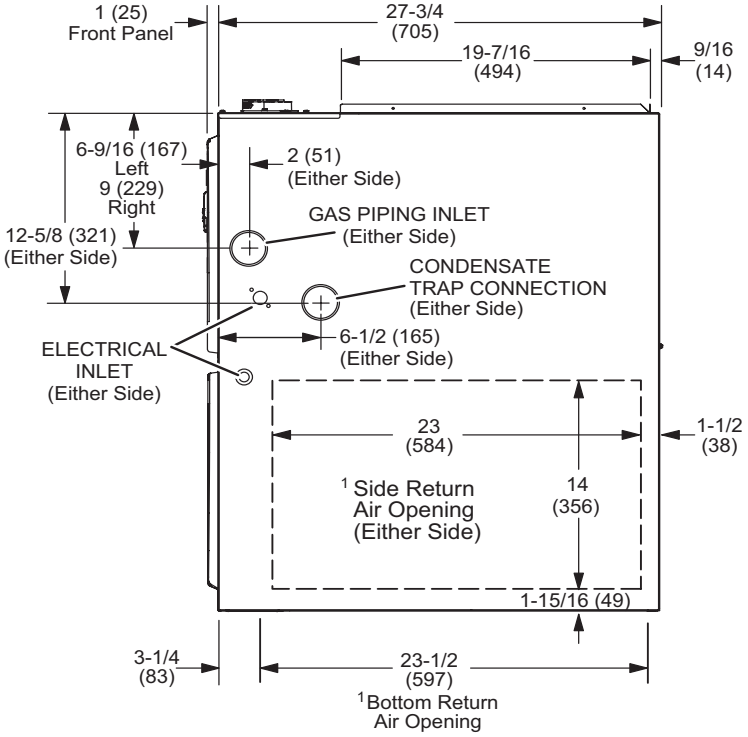

SIDE VIEW

Model No.	A		B		C		D	
	in.	mm	in.	mm	in.	mm	in.	mm
ML296UH045XV36B ML296UH070XV36B	17-1/2	446	16-3/8	416	16	406	7-5/8	194
ML296UH090XV48C ML296UH110XV60C	21	533	19-7/8	505	19-1/2	495	9-3/8	238

DIMENSIONS - UNIT - HORIZONTAL POSITION

LEFT-HAND AIR DISCHARGE

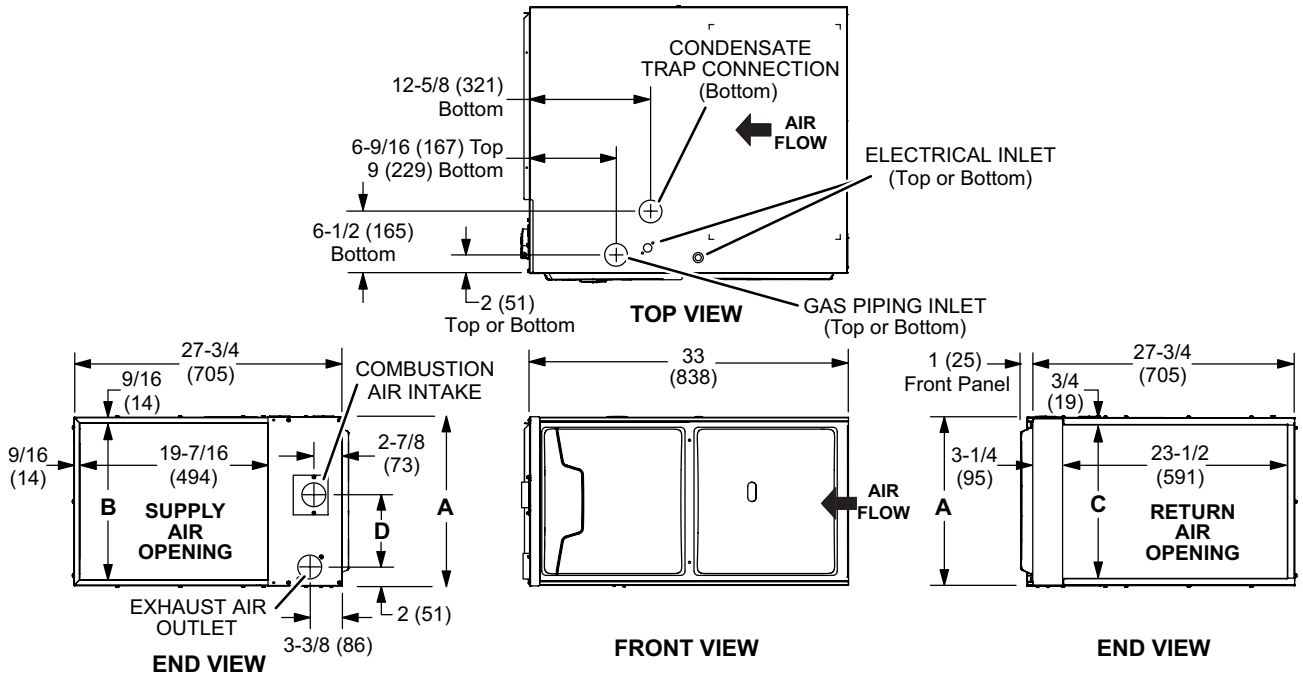

RIGHT-HAND AIR DISCHARGE

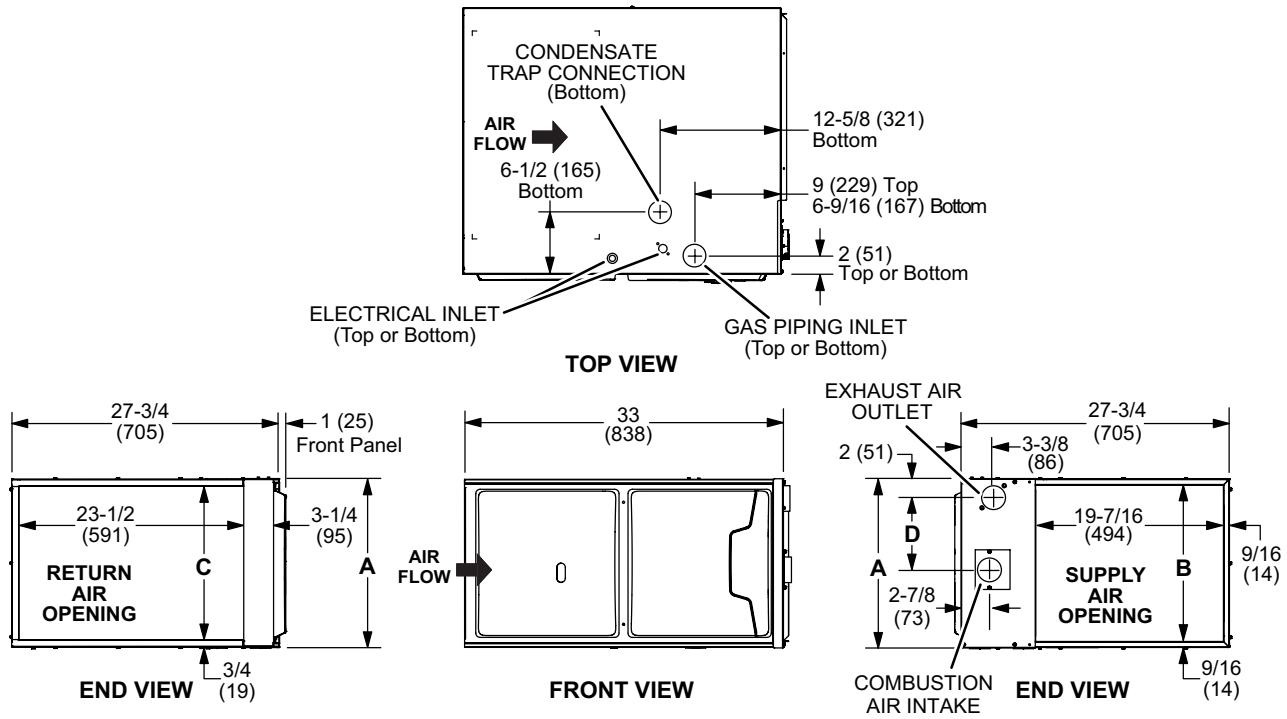

Model No.	A		B		C		D	
	in.	mm	in.	mm	in.	mm	in.	mm
ML296UH045XV36B ML296UH070XV36B	17-1/2	446	16-3/8	416	16	406	7-5/8	194
ML296UH090XV48C ML296UH110XV60C	21	533	19-7/8	505	19-1/2	495	9-3/8	238

HORIZONTAL (END) FILTER KIT

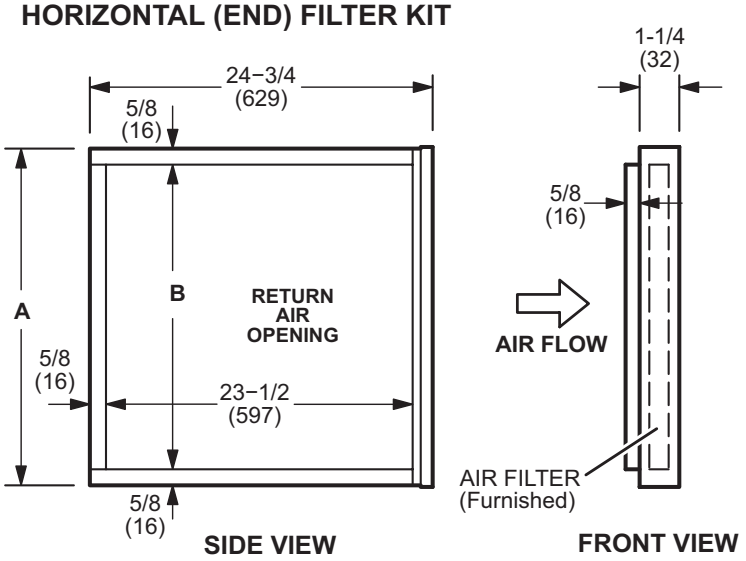

Furnace Cabinet Width	Catalog Number	A		B	
		in.	mm	in.	mm
B	87L96	18	457	16-3/4	425
C	87L97	21	533	18-3/4	476

OPTIONAL RETURN AIR BASE

(Upflow Applications Only - For use with B and C width cabinets)

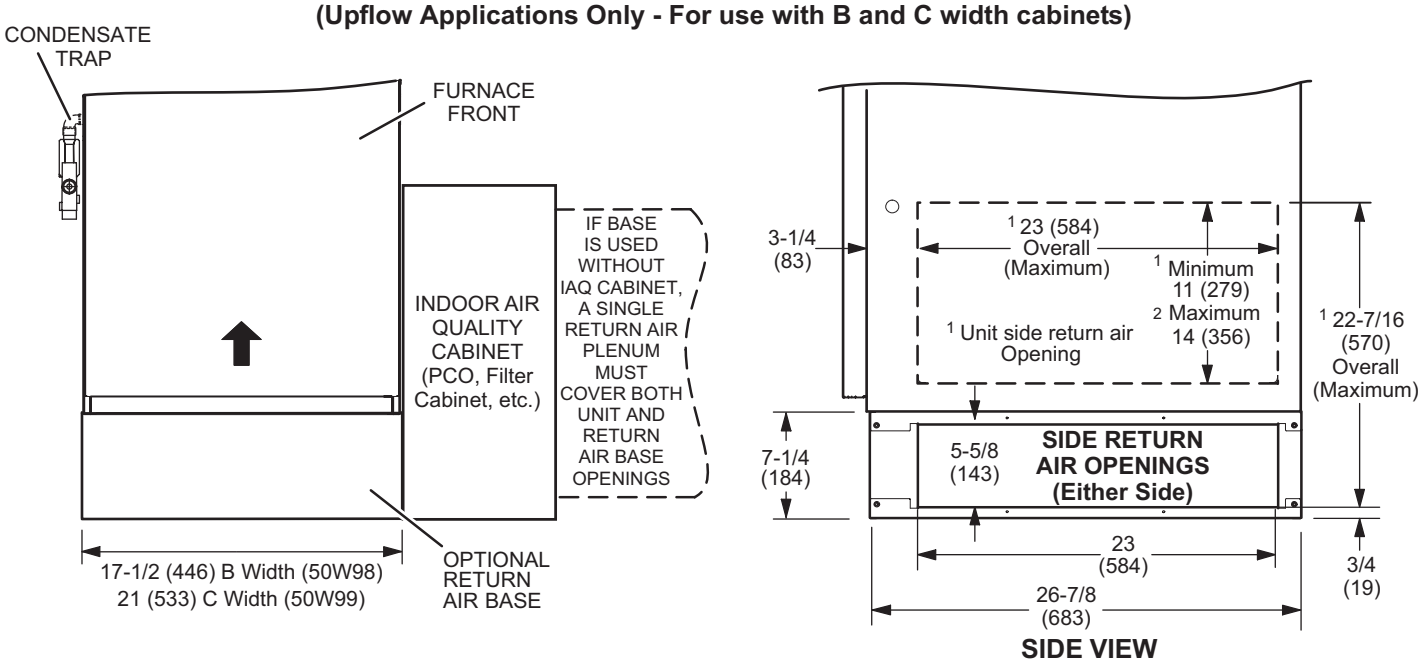

NOTE- Optional Side Return Air Filter Kits are not for use with Optional Return Air Base.

[1] Both the unit return air opening and the base return air opening must be covered by a single plenum or IAQ cabinet. Minimum unit side return air opening dimensions for units requiring 1800 cfm or more of air (W x H): 23 x 11 in. (584 x 279 mm). The opening can be cut as needed to accommodate plenum or IAQ cabinet while maintaining dimensions shown. Side return air openings must be cut in the field. There are cutting guides stenciled on the cabinet for the side return air opening. The size of the opening must not extend beyond the markings on the furnace cabinet.

[2] To minimize pressure drop, the largest opening height possible, up to 14 in. (356 mm), is preferred.

DIMENSIONS - FURNACE/COIL COMBINED DIMENSIONS

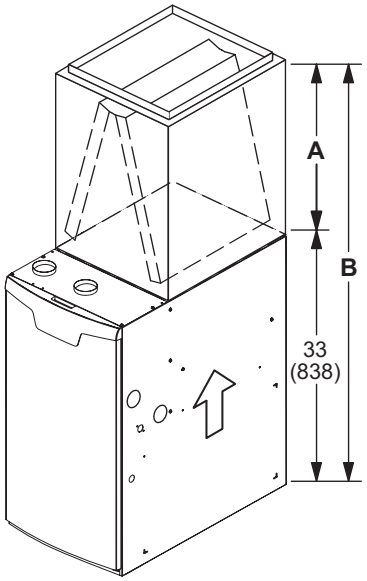

UPFLOW POSITION - CASED

Model		A		B	
CK40CT	**C35/CX35**	**in.**	**mm**	**in.**	**mm**
CK40CT-18/24A CK40CT-18/24B	C35/CX35-18/24A C35/CX35-18/24B	16-1/2	419	49-1/2	1257
CK40CT-24A CK40CT-24B	C35/CX35-24A C35/CX35-24B	18-1/2	470	51-1/2	1308
CK40CT-30A CK40CT-30B	C35/CX35-30A C35/CX35-30B	22-1/2	572	55-1/2	1410
CK40CT-30/36A CK40CT-30/36B CK40CT-30/36C	C35/CX35-30/36A C35/CX35-30/36B C35/CX35-30/36C	24-1/2	622	57-1/2	1461
CK40CT-36A CK40CT-36B	C35/CX35-36A C35/CX35-36B	24-1/2	622	57-1/2	1461
CK40CT-48B CK40CT-48C	C35/CX35-48B C35/CX35-48C	27-1/2	699	60-1/2	1537
CK40CT-49C	C35/CX35-49C	29-1/2	749	62-1/2	1588
CK40CT-50/60C	C35/CX35-50/60C	27-1/2	699	60-1/2	1537
CK40CT-60C	CX35-60C	31-1/2	800	64-1/2	1638

UPFLOW POSITION - UNCASED

Model		A		B	
CK40UT	**C35**	**in.**	**mm**	**in.**	**mm**
CK40UT-18/24A CK40UT-18/24B	C35-18/24A C35-18/24B	14-1/8	359	47-1/8	1197
CK40UT-24A CK40UT-24B	C35-24A C35-24B	16-3/8	416	49-3/8	1254
CK40UT-30A CK40UT-30B	C35-30A C35-30B	20-3/4	527	53-3/4	1365
CK40UT-30/36A CK40UT-30/36B CK40UT-30/36C	C35-30/36A C35-30/36B C35-30/36C	22-1/4	565	55-1/4	1403
CK40UT-36A CK40UT-36B	C35-36A C35-36B	22-3/8	568	55-3/8	1407
CK40UT-48B CK40UT-48C	C35-48B C35-48C	26-1/4	667	59-1/4	1505
CK40UT-49C	C35-49C	28-1/2	724	61-1/2	1562
CK40UT-50/60C	C35-50/60C	25-7/8	657	58-7/8	1495
CK40UT-60C	C35-60C	30-5/8	778	63-5/8	1616

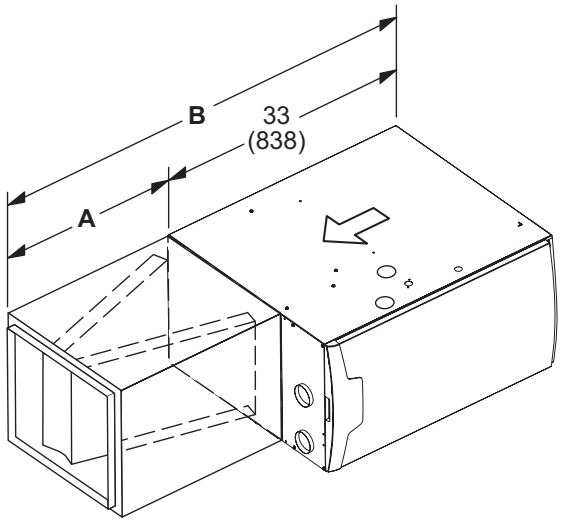

HORIZONTAL POSITION

Model		A		B	
CK40HT	**CHX35**	**in.**	**mm**	**in.**	**mm**
CK40HT-18A CK40HT-24A CK40HT-24B CK40HT-30B CK40HT-36A CK40HT-36B CK40HT-36C CK40HT-42C CK40HT-48C	CHX35-18A CHX35-24A CHX35-24B CHX35-30B CHX35-36A CHX35-36B CHX35-36C CHX35-42C CHX35-48C	26-1/2	673	59-1/2	1511
CK40CT-30A CK40CT-42B CK40CT-48B CK40CT-51/61C	CHX35-30A CHX35-42B CHX35-48B CHX35-51/61C	31-1/2	880	64-1/2	1638

FLUSH-MOUNT VENT TERMINATION KIT 51W11 (US) or 51W12 (CANADA)

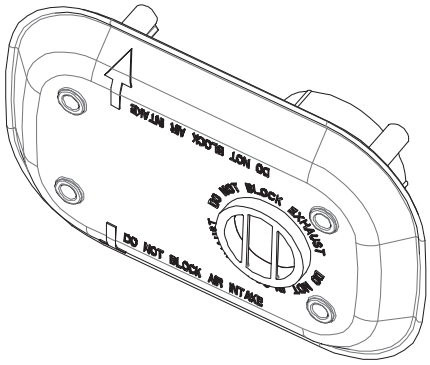

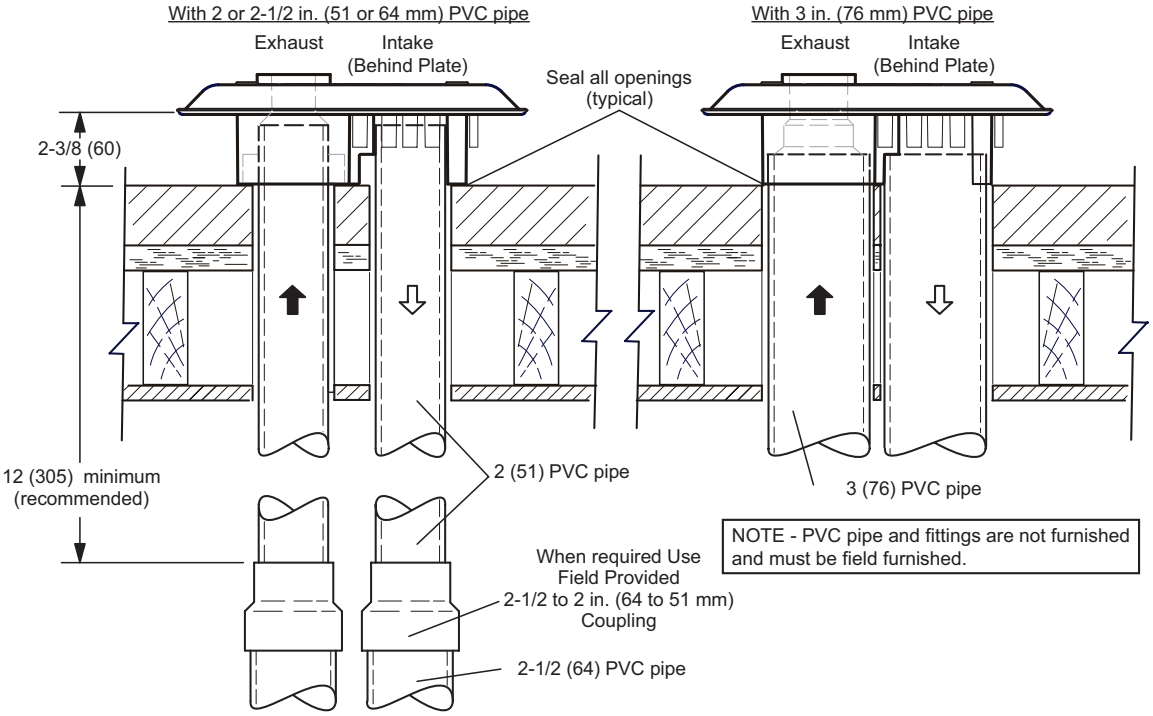

NOTE - PVC pipe and fittings are not furnished and must be field furnished.

MUFFLERS
15Y66 - 2-inch
16A56 - 3-inch

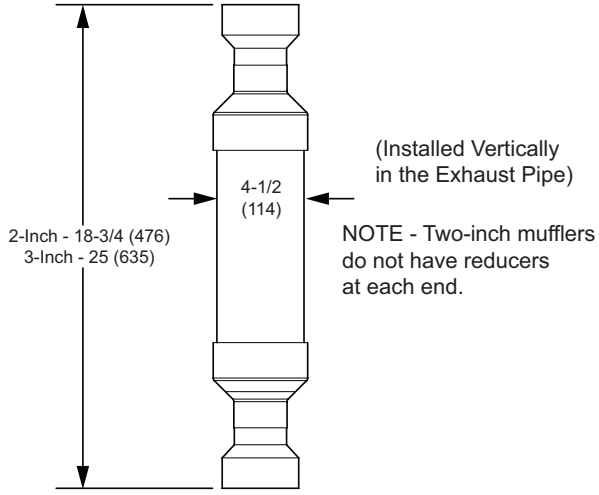

(Installed Vertically in the Exhaust Pipe)

NOTE - Two-inch mufflers do not have reducers at each end.

CONCENTRIC WALL TERMINATION APPLICATIONS

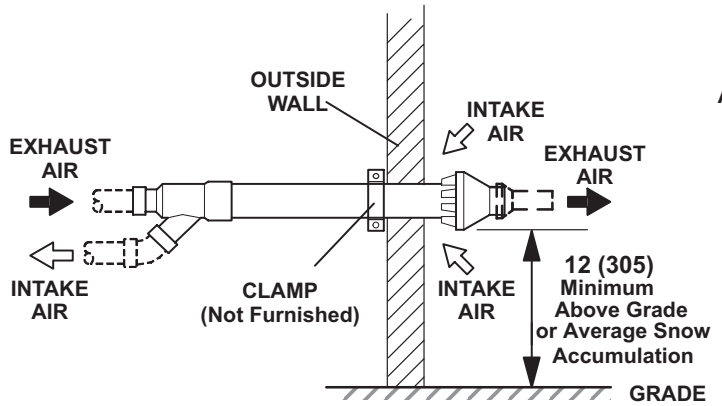

CONCENTRIC ROOF TERMINATION APPLICATIONS

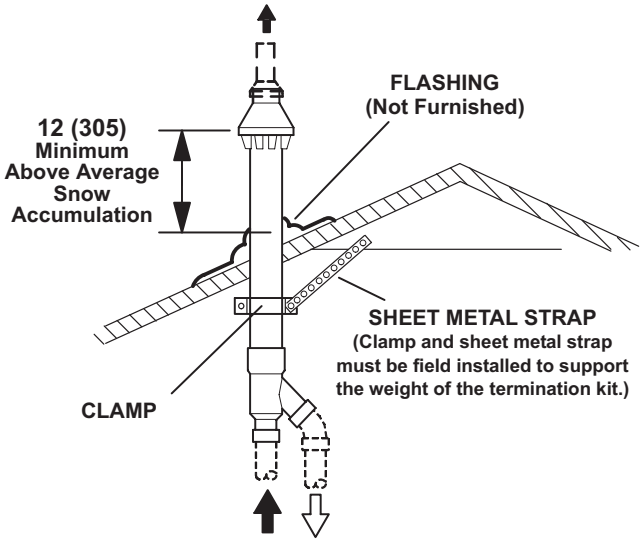

71M80 / 69M29 / 44W92 − 2 inch kits
60L46 / 44W93 − 3 inch kits
See Installation Instructions for additional information.

Note - Field provided reducer may be required to adapt different vent pipe sizes to termination.

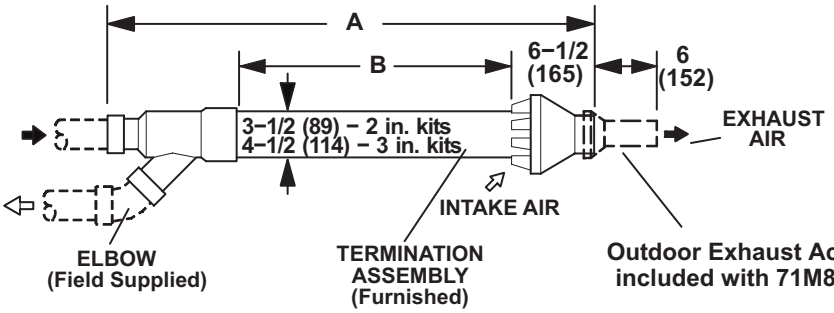

Cat. No.	A		B	
	in.	mm	in.	mm
71M80 69M29	33−3/8	848	16−3/4	425
44W92 (Canada)	29	737	15−1/2	394
60L46	38−7/8	987	21−3/16	538
44W93 (Canada)	36−1/8	918	19−1/2	495

NOTE − Typical illustration for dimensions only. Design may vary depending on kit ordered.

WALL TERMINATION KITS (CLOSE-COUPLE)
EXTENDED VENT FOR GRADE CLEARANCE
2 inch (51 mm) 22G44 (US)
3 inch (76 mm) 44J40 (US)
See Installation Instructions for additional information.

Note - Field provided reducer may be required to adapt different vent pipe sizes to termination.

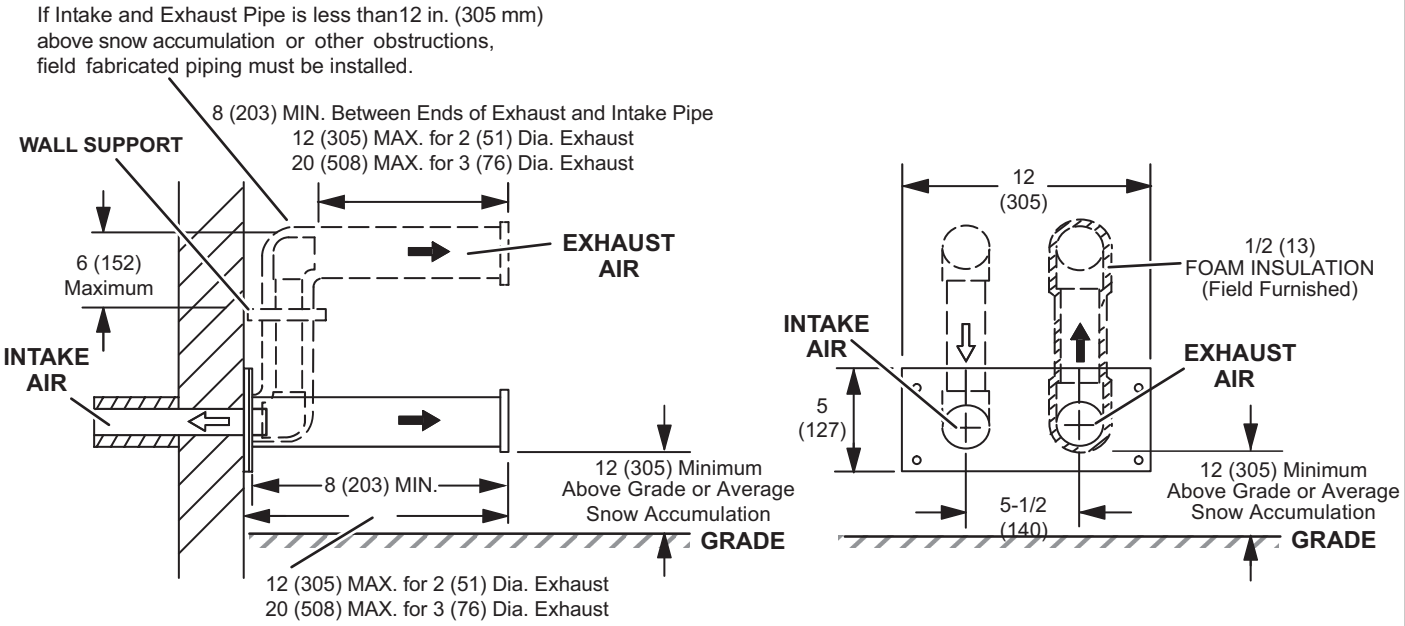

WALL TERMINATION KITS (CLOSE-COUPLE)
EXTENDED VENT FOR GRADE CLEARANCE
2 inch (51 mm) 30G28 (WTK Canada)
3 inch (76 mm) 81J20 (WTK Canada)
See Installation Instructions for additional information.

Note - Field provided reducer may be required to adapt different vent pipe sizes to termination.

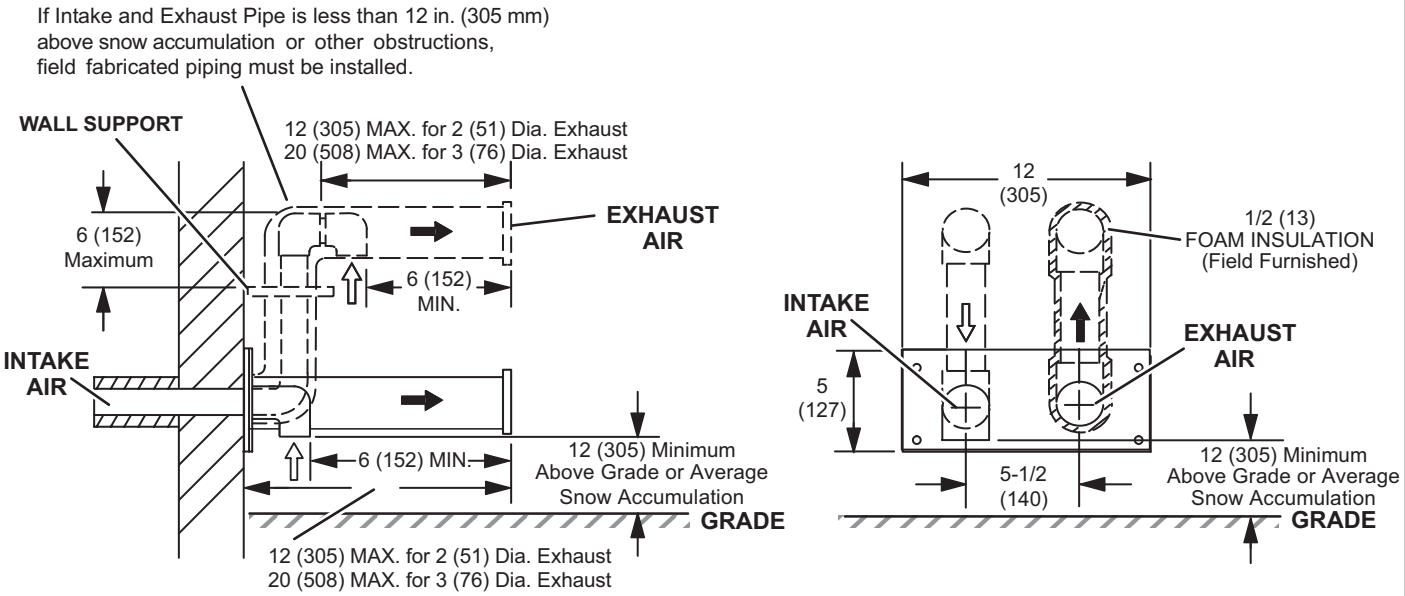

BLOWER DATA

ML296UH045XV36B BLOWER PERFORMANCE (less filter)

BOTTOM RETURN AIR, SINGLE SIDE RETURN AIR OR SIDE RETURN AIR WITH OPTIONAL RETURN AIR BASE

0 through 0.8 in. w.g. (Heating) and 0 through 1.0 in. w.g. (Cooling) External Static Pressure Range

"ADJUST" Switch Positions	Speed Switch Positions							
	Second Stage "HEAT" Speed - cfm				Second Stage "COOL" Speed - cfm			
	D	C	[1] B	A	D	C	B	[1] A
+	765	860	960	1050	885	1095	1210	1370
[1] NORM	690	775	855	950	800	990	1115	1255
—	610	710	770	845	710	880	995	1115
"ADJUST" Switch Positions	First Stage "HEAT" Speed - cfm				First Stage "COOL" Speed - cfm			
	D	C	[1] B	A	D	C	B	[1] A
+	700	790	855	925	615	780	900	980
[1] NORM	640	705	780	840	565	690	800	895
—	550	645	700	755	500	615	715	790

[1] Factory default jumper setting.

NOTES - The effect of static pressure is included in air volumes shown.
First stage HEAT is approximately **91%** of the same second stage HEAT speed position.
First stage COOL (two-stage air conditioning units only) is approximately **70%** of the same second stage COOL speed position.
Continuous Fan Only speed is approximately **38%** of the same second stage COOL speed position.
Lennox® LZSV Variable Zoning System Applications - Minimum blower speed is 300 cfm.

ML296UH045XV36B BLOWER MOTOR WATTS (COOLING)

Jumper Speed Positions		Motor Watts @ Various External Static Pressures - in. wg.																			
		First Stage									Second Stage										
		0	0.1	0.2	0.3	0.4	0.5	0.6	0.7	0.8	0	0.1	0.2	0.3	0.4	0.5	0.6	0.7	0.8	0.9	1.0
"+" (Plus) SETTING ("Adjust" Jumper at "+" Setting)																					
"COOL" Speed	Tap D	20	35	58	79	99	125	148	168	197	63	89	112	140	171	193	222	247	267	295	321
	Tap C	49	73	98	120	141	169	187	212	242	123	147	181	209	243	277	301	333	350	390	409
	Tap B	73	98	123	148	174	196	225	248	274	171	199	237	268	302	341	371	403	431	459	498
	Tap A	93	121	146	182	208	236	261	287	319	250	282	321	360	394	438	474	501	530	529	526
"NORM" (Normal) SETTING ("Adjust" Jumper at "NORM" Setting)																					
"COOL" Speed	Tap D	16	42	61	77	98	118	140	167	191	38	60	93	116	141	172	196	219	248	271	294
	Tap C	21	42	74	95	126	148	169	194	219	91	116	146	174	211	237	259	291	315	349	369
	Tap B	40	61	94	122	149	175	200	223	249	136	161	195	229	260	289	321	346	375	408	435
	Tap A	71	98	125	150	174	201	223	254	284	194	222	256	292	324	363	399	426	455	483	515
"—" (Minus) SETTING ("Adjust" Jumper at "—" Setting)																					
"COOL" Speed	Tap D	12	33	47	66	85	104	125	149	167	28	51	77	98	120	143	167	193	214	242	260
	Tap C	18	46	63	80	101	129	152	171	201	65	91	113	144	172	194	219	245	271	299	321
	Tap B	37	59	87	112	133	157	184	205	231	99	126	154	186	209	233	265	293	322	342	377
	Tap A	51	73	99	130	152	176	200	223	249	140	169	201	233	265	284	327	349	386	408	444

BLOWER DATA

ML296UH070XV36B BLOWER PERFORMANCE (less filter)

BOTTOM RETURN AIR, SINGLE SIDE RETURN AIR OR SIDE RETURN AIR WITH OPTIONAL RETURN AIR BASE

0 through 0.8 in. w.g. (Heating) and 0 through 1.0 in. w.g. (Cooling) External Static Pressure Range

"ADJUST" Switch Positions	Speed Switch Positions							
	Second Stage "HEAT" Speed - cfm				Second Stage "COOL" Speed - cfm			
	D	C	[1] B	A	D	C	B	[1] A
+	955	1025	1085	1175	920	1095	1235	1330
[1] NORM	880	935	990	1070	840	990	1120	1200
—	790	840	890	965	750	885	1000	1075
"ADJUST" Switch Positions	First Stage "HEAT" Speed - cfm				First Stage "COOL" Speed - cfm			
	D	C	[1] B	A	D	C	B	[1] A
+	865	925	980	1055	655	780	850	945
[1] NORM	795	845	900	975	580	700	765	850
—	715	770	805	865	515	630	690	760

[1] Factory default jumper setting.

NOTES - The effect of static pressure is included in air volumes shown.
First stage HEAT is approximately **90%** of the same second stage HEAT speed position.
First stage COOL (two-stage air conditioning units only) is approximately **70%** of the same second stage COOL speed position.
Continuous Fan Only speed is approximately **38%** of the same second stage COOL speed position.
Lennox® LZSV Variable Zoning System Applications - Minimum blower speed is 300 cfm.

ML296UH070XV36B BLOWER MOTOR WATTS (COOLING)

Jumper Speed Positions		Motor Watts @ Various External Static Pressures - in. wg.																			
		First Stage									Second Stage										
		0	0.1	0.2	0.3	0.4	0.5	0.6	0.7	0.8	0	0.1	0.2	0.3	0.4	0.5	0.6	0.7	0.8	0.9	1.0
"+" (Plus) SETTING ("Adjust" Jumper at "+" Setting)																					
"COOL" Speed	Tap D	35	56	79	101	124	146	164	192	214	86	110	139	167	190	223	249	268	297	321	347
	Tap C	50	72	103	126	151	174	199	222	243	134	163	196	230	260	295	318	353	381	414	438
	Tap B	68	94	118	147	170	197	221	246	274	188	220	256	295	328	362	392	433	461	498	520
	Tap A	86	110	146	173	200	224	255	280	306	236	272	311	348	387	418	457	496	529	529	525
"NORM" (Normal) SETTING ("Adjust" Jumper at "NORM" Setting)																					
"COOL" Speed	Tap D	24	45	66	89	109	132	151	174	196	65	88	115	146	170	190	219	243	263	287	312
	Tap C	40	63	87	112	135	158	180	199	226	99	127	158	187	221	250	277	301	329	357	389
	Tap B	58	79	107	130	153	173	198	219	241	147	180	210	245	278	306	340	372	392	421	460
	Tap A	69	93	123	154	176	202	228	252	272	185	217	250	288	320	355	388	415	445	471	498
"—" (Minus) SETTING ("Adjust" Jumper at "—" Setting)																					
"COOL" Speed	Tap D	22	45	61	77	97	117	144	162	190	53	76	99	123	145	170	194	214	236	262	290
	Tap C	27	48	70	96	114	137	157	182	207	74	99	126	157	184	208	234	260	281	312	335
	Tap B	37	61	82	104	129	150	174	196	222	105	133	162	194	224	251	280	305	333	357	386
	Tap A	45	68	98	123	147	173	195	218	241	162	188	211	229	258	277	307	327	354	379	404

BLOWER DATA

ML296UH090XV48C BLOWER PERFORMANCE (less filter)

BOTTOM RETURN AIR, SINGLE SIDE RETURN AIR OR SIDE RETURN AIR WITH OPTIONAL RETURN AIR BASE

0 through 0.8 in. w.g. (Heating) and 0 through 1.0 in. w.g. (Cooling) External Static Pressure Range

"ADJUST" Switch Positions	Speed Switch Positions							
	Second Stage "HEAT" Speed - cfm				Second Stage "COOL" Speed - cfm			
	D	C	[1] B	A	D	C	B	[1] A
+	1205	1290	1330	1555	1135	1355	1525	1765
[1] NORM	1075	1155	1200	1410	1080	1270	1435	1655
—	970	1040	1085	1250	940	1115	1255	1460
"ADJUST" Switch Positions	First Stage "HEAT" Speed - cfm				First Stage "COOL" Speed - cfm			
	D	C	[1] B	A	D	C	B	[1] A
+	1125	1205	1245	1475	830	985	1095	1260
[1] NORM	1040	1110	1135	1345	765	920	1040	1195
—	935	1000	1030	1210	675	795	900	1040

[1] Factory default jumper setting.

NOTES - The effect of static pressure is included in air volumes shown.
First stage HEAT is approximately **95%** of the same second stage HEAT speed position.
First stage COOL (two-stage air conditioning units only) is approximately **70%** of the same second stage COOL speed position.
Continuous Fan Only speed is approximately **38%** of the same second stage COOL speed position.
Lennox® LZSV Variable Zoning System Applications - Minimum blower speed is 380 cfm.

ML296UH090XV48C BLOWER MOTOR WATTS (COOLING)

Jumper Speed Positions		Motor Watts @ Various External Static Pressures - in. wg.																			
		First Stage									Second Stage										
		0	0.1	0.2	0.3	0.4	0.5	0.6	0.7	0.8	0	0.1	0.2	0.3	0.4	0.5	0.6	0.7	0.8	0.9	1.0
"+" (Plus) SETTING ("Adjust" Jumper at "+" Setting)																					
"COOL" Speed	Tap D	48	71	94	117	144	164	186	207	234	110	135	165	194	219	243	274	299	330	351	378
	Tap C	71	94	121	146	169	193	214	245	266	179	208	240	270	302	329	361	392	422	449	481
	Tap B	98	122	154	174	204	228	260	282	305	250	284	314	351	382	412	451	484	517	550	578
	Tap A	146	174	202	229	262	286	315	343	372	405	441	481	514	550	584	623	659	701	735	768
"NORM" (Normal) SETTING ("Adjust" Jumper at "NORM" Setting)																					
"COOL" Speed	Tap D	44	67	86	105	125	145	169	186	211	105	130	154	178	199	225	250	273	297	324	345
	Tap C	65	87	110	131	153	176	197	221	241	158	187	213	242	265	290	314	346	371	404	430
	Tap B	90	114	140	163	182	209	229	257	281	215	248	273	301	330	358	380	412	451	473	507
	Tap A	133	156	183	208	232	254	278	304	332	335	368	397	428	459	491	519	552	582	611	652
"—" (Minus) SETTING ("Adjust" Jumper at "—" Setting)																					
"COOL" Speed	Tap D	23	43	66	88	109	132	152	170	193	67	93	116	139	164	194	218	239	264	286	315
	Tap C	38	59	84	109	133	156	176	199	223	110	134	164	187	215	242	268	295	322	346	366
	Tap B	55	79	102	131	155	177	207	223	252	143	170	196	230	255	284	311	338	369	394	419
	Tap A	85	113	138	162	188	215	242	266	294	220	254	283	315	345	376	416	447	475	510	535

BLOWER DATA

ML296UH110XV60C BLOWER PERFORMANCE (less filter)

BOTTOM RETURN AIR, SINGLE SIDE RETURN AIR OR SIDE RETURN AIR WITH OPTIONAL RETURN AIR BASE

NOTE - Air volumes in **bold** (over 1800 cfm) must have one of the following:

- Single side return air and Optional Return Air Base with transition that must accommodate required 20 x 25 x 1 inch air filter to maintain proper velocity
- Bottom return air
- Return air from both sides
- Bottom and one side return air

0 through 0.8 in. w.g. (Heating) and 0 through 1.0 in. w.g. (Cooling) External Static Pressure Range

"ADJUST" Switch Positions	Speed Switch Positions							
	Second Stage "HEAT" Speed - cfm				Second Stage "COOL" Speed - cfm			
	D	C	[1] B	A	D	C	B	[1] A
+	1680	**1805**	**1950**	**2105**	1405	1620	**1820**	**2055**
[1] NORM	1550	1665	**1800**	**1950**	1255	1455	1655	**1860**
—	1400	1505	1625	1750	1145	1335	1515	1700
"ADJUST" Switch Positions	**First Stage "HEAT" Speed - cfm**				**First Stage "COOL" Speed - cfm**			
	D	C	[1] B	A	D	C	B	[1] A
+	1290	1390	1505	1615	1015	1165	1325	1485
[1] NORM	1170	1270	1375	1475	905	1055	1200	1335
—	1070	1160	1250	1345	800	950	1080	1220

[1] Factory default jumper setting.

NOTES - The effect of static pressure is included in air volumes shown.
First stage HEAT is approximately **75%** of the same second stage HEAT speed position.
First stage COOL (two-stage air conditioning units only) is approximately **70%** of the same second stage COOL speed position.
Continuous Fan Only speed is approximately **38%** of the same second stage COOL speed position.
Lennox® LZSV Variable Zoning System Applications - Minimum blower speed is 460 cfm.

ML296UH110XV60C BLOWER MOTOR WATTS (COOLING)

Jumper Speed Positions		Motor Watts @ Various External Static Pressures - in. wg.																			
		First Stage									Second Stage										
		0	0.1	0.2	0.3	0.4	0.5	0.6	0.7	0.8	0	0.1	0.2	0.3	0.4	0.5	0.6	0.7	0.8	0.9	1.0
"+" (Plus) SETTING ("Adjust" Jumper at "+" Setting)																					
"COOL" Speed	Tap D	65	90	110	135	155	179	207	228	246	170	196	225	258	286	318	347	380	404	427	456
	Tap C	92	120	142	172	196	223	251	274	301	257	286	321	360	391	424	452	484	515	549	585
	Tap B	138	162	197	221	251	280	303	334	360	344	379	418	457	494	529	567	602	642	674	713
	Tap A	191	220	251	284	312	343	372	401	434	499	539	580	625	661	696	742	783	823	866	902
"NORM" (Normal) SETTING ("Adjust" Jumper at "NORM" Setting)																					
"COOL" Speed	Tap D	49	72	94	117	141	160	184	207	231	122	147	177	207	231	261	289	310	342	366	399
	Tap C	76	98	126	147	172	196	223	244	267	183	210	244	276	306	334	362	395	422	453	486
	Tap B	109	134	160	187	211	237	261	289	313	267	296	334	369	405	434	474	506	538	568	600
	Tap A	146	176	200	232	258	287	317	345	370	380	411	457	488	531	565	597	638	672	705	748
"—" (Minus) SETTING ("Adjust" Jumper at "—" Setting)																					
"COOL" Speed	Tap D	37	54	83	103	123	147	166	187	206	89	113	138	169	193	217	246	270	293	320	343
	Tap C	58	79	103	127	149	175	193	215	239	140	166	198	228	251	280	310	340	364	396	419
	Tap B	85	105	136	159	184	207	230	256	278	202	231	266	294	325	359	392	419	447	480	514
	Tap A	103	129	154	185	211	237	263	290	312	285	316	349	386	423	453	490	519	552	583	614

REVISIONS

Sections	Description of Change
Approvals	Updated ENERGY STAR® usage.

Visit us at www.Lennox.com
For the latest technical information, www.LennoxPros.com
Contact us at 1-800-9-LENNOX

NOTE - Due to Lennox' ongoing commitment to quality, Specifications, Ratings and Dimensions subject to change without notice and without incurring liability.
Improper installation, adjustment, alteration, service or maintenance can cause property damage or personal injury.
Installation and service must be performed by a qualified installer and servicing agency.

©2026 Lennox Industries, Inc.