EL19KPV

ELITE® SERIES

Variable Capacity | Precise Comfort® Technology | Quantum™ Coil | R-454B - 60Hz

RESIDENTIAL
PRODUCT SPECIFICATIONS (EHB)

2 to 5 Tons
SEER2 up to 19.5
HSPF2 up to 9.0
Cooling Capacity | 23,400 to 57,500 Btuh
Heating Capacity | 22,800 to 58,000 Btuh

ELITE® SERIES

LENNOX QUANTUM™ COIL

S40 Smart Wi-Fi
Communicating Thermostat
(not furnished - ordered separately)

ENERGY STAR

MODEL NUMBER IDENTIFICATION

EL 19 K P V - 036 - 230 A 01

- **Product Tier** — EL = Elite® Series
- **Nominal SEER2** — 19 = 19 to 19.5
- **Refrigerant Type** — K = R-454B
- **Unit Type** — P = Heat Pump Outdoor Unit
- **Cooling/Heating Stages** — V = Variable Capacity Compressor
- **Nominal Cooling Capacity** — 024 = 2 tons; 036 = 3 tons; 048 = 4 tons; 060 = 5 tons
- **Voltage** — 230 = 208/230V-1 phase-60Hz
- **Ratings Revision Level**
- **Revision Level**

Form Number 211062 | April 2026
Supersedes all previous versions

FEATURE HIGHLIGHTS

1. Outdoor Coil Fan
2. Quantum™ Coil
3. High Capacity Liquid Line Drier
4. High Pressure Switch
5. Four-Way Reversing Valve
6. Variable Capacity Rotary Compressor
7. DC Inverter Control
8. Lennox® Communicating Control
9. Heavy Gauge Steel Cabinet
10. Louvered Coil Protection
11. Refrigerant Line Connections and Access

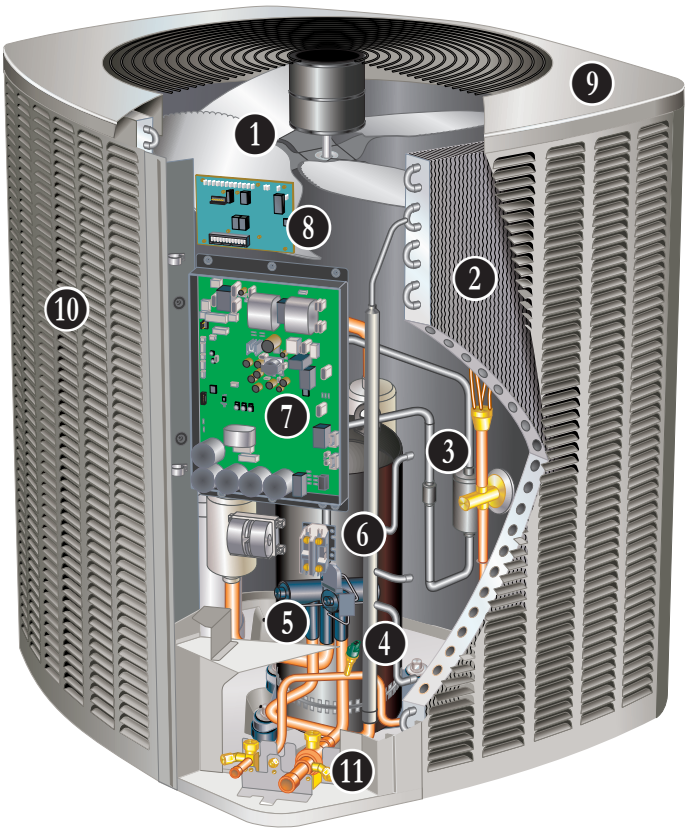

CONTENTS

Approvals And Warranty 3
Control Options 8
Dimensions - Unit 11
Expanded Sound Data 10
Features 3
Field Wiring 10
Installation Clearances 10
Model Number Identification. 1
Optional Accessories - Order Separately 9
Optional Controls - Order Separately 9
Specifications 9
TXV Substitution - R-454b 12
TXV Usage. 12

APPROVALS AND WARRANTY

APPROVALS

- AHRI Standard 210-240-2023 certified
- AHRI Certified system match-ups and expanded ratings, visit www.LennoxPros.com
- ENERGY STAR® Certified (certain units)
- Sound rated to AHRI Standard 270-2008 test conditions
- Tested in Lennox' Research Laboratory environmental test room
- Rated According to U.S. Department of Energy (DOE) test procedures
- Unit and components ETL, NEC and CEC bonded for grounding to meet safety standards for servicing
- ETL certified (U.S. and Canada)
- ISO 9001 Registered Manufacturing Quality System

WARRANTY

- Compressor:
  - Limited ten years in residential installations
  - Limited five years in non-residential installations
- All other covered components:
  - Limited five years in residential installations
  - Limited one year in non-residential installations

NOTE - Refer to Lennox® Basic Limited Warranty at www.Lennox.com for additional details.

FEATURES

APPLICATIONS

- 2 through 5 tons
- Sound levels as low as 61 dBA
- Heating operation down to –15°F
- Single-phase power supply
- Applicable to indoor air handlers or gas furnaces with indoor add-on coils
- Suitable for coastal areas
- Factory test operated
- Shipped completely factory assembled, piped and wired

NOTE - When heat pumps are used with gas furnaces, a dual-fuel compatible thermostat or zone control system with dual-fuel capabilities must be used (order separately).

NOTE - Installer must set outdoor unit, connect refrigerant lines and make electrical connections to complete job.

REFRIGERATION SYSTEM

R-454B Refrigerant

- Low GWP (Global Warming Potential)
- Zero ODP (Ozone Depletion Potential)
- Low Toxicity/Lower Flammability - A2L
- Unit is factory pre-charged

NOTE - Total system refrigerant charge is dependent on outdoor unit size, indoor unit size and refrigerant line length.

NOTE - Refer to the unit-mounted charging sticker to determine correct amount of charge required.

1 Outdoor Coil Fan

- Direct drive fan
- ECM motor
- Vertical air discharge
- Totally enclosed fan motor
- Ball bearings
- Inherently protected
- PVC (polyvinyl chloride) coated steel fan guard

2 Quantum™ Coil

- Lennox designed and fabricated coil
- Enhanced aluminum alloy tube/enhanced fin coil
- Superior corrosion resistance
- Ripple-edged aluminum fins
- Aluminum tube construction
- Lanced fins for maximum fin surface exposure
- Fin collars grip tubing for maximum contact area
- Flared shoulder tubing connections
- Factory tested under high pressure
- Entire coil is accessible for cleaning

Expansion Valve - Outdoor Unit

- Designed and sized specifically for use in heat pump system
- Sensing bulb is located on the line between reversing valve and the coil
- Senses suction temperature during the heating cycle
- Factory installed and piped

REFRIGERATION SYSTEM (continued)

Discharge Temperature Switch
- Shuts off unit if operating conditions cause the compressor discharge line temperature to rise above setpoint
- Protects compressor from excessive pressure / temperature
- Automatic reset when temperature drops below setpoint

3 High Pressure Transducer
- Protects the system from high pressure conditions
- Automatic reset

Low Pressure Transducer
- Protects the compressor from low pressure conditions such as low refrigerant charge, or low/no indoor airflow
- Shuts off unit if suction pressure falls below setting
- Provides loss of charge and freeze-up protection
- Auto-reset

4 High Capacity Suction Line Drier
- Factory installed in the suction line
- Drier traps moisture or dirt that could contaminate the system
- 100% molecular-sieve, bead type drier

5 Four-Way Reversing Valve
- Rapid changeover of refrigerant flow direction from cooling to heating and vice versa
- Operates on pressure differential between outdoor unit and indoor coil
- Factory installed

Optional Accessories

Check/Expansion Valve Kits
- Field installed on indoor units (if required)
- See TXV/Orifice Usage table
- Chatleff-style fitting

Freezestat
- Protects the system from ice buildup on the indoor coil due to conditions such as low/no airflow, or low refrigerant charge
- Cycles compressor off when suction line temperature falls below freezestat setpoint
- Opens at 29°F and closes at 58°F
- Installs on or near the discharge line of the evaporator or on the suction line

Refrigerant Line Kits
- Refrigerant lines are shipped refrigeration clean
- Lines are cleaned, dried, pressurized and sealed at factory
- Suction line fully insulated
- Lines are stubbed at both ends

NOTE - The EL19KPV is a variable capacity heat pump utilizing variable speed compressor technology. With the variable speed compressor and variable pumping capacity, additional consideration must be given to refrigerant piping sizing and application.
Please refer to the Installation Instructions or Service Literature for Line Set Requirements and Refrigerant Piping Guidelines.

INDOOR REFRIGERANT DETECTION SYSTEM (RDS)

- Complies with UL 60335-2-40 approved standard
- Required for all systems using R-454B refrigerant
- Factory or field installed on all indoor units
- Consists of a RDS refrigerant detection sensor and a mitigation control in the indoor unit
- Ensures safe operation for systems equipped with R-454B refrigerant
- Indoor sensor will detect any R-454B refrigerant
- If R-454B refrigerant is detected, the refrigerant detection system will stop compressor operation and operate the blower to reduce concentrations in the conditioned space
- Once safe levels are reached the HVAC system will resume normal operation
- Refer to indoor unit Product Specifications documents for additional details

FEATURES

PRECISE COMFORT® TECHNOLOGY

The Variable Capacity Rotary Compressor and DC Inverter Control is an integrated system that operates together to reduce overall energy usage when compared to conventional heat pumps.

6 Variable Capacity Rotary Compressor

- High volumetric efficiency
- Uniform suction flow
- Constant discharge flow
- Quiet operation
- Low gas pulses during compression reduces operational sound levels
- Compressor motor is internally protected from excessive current and temperature
- Compressor is installed in the unit on resilient rubber mounts for vibration free operation

Rotary Compressor Operation

- Rotary compressor has a cylindrical chamber
- A roller is mounted to the motor shaft and is offset to rotate in the center of the chamber
- Two spring-loaded vanes sweep the sides of the chamber as the roller rotates
- Roller touches the chamber at a point between the intake and the discharge ports as the roller rotates
- While rotating, the roller draws vapor into the chamber through the intake port
- Vapor is trapped in the space between the chamber wall, the vane, and the point of contact between the roller and the chamber
- As the next vane passes the contact point vapor is compressed
- The space becomes smaller compressing the vapor as the roller rotates
- Vapor is discharged through the discharge port
- Compressor is tolerant to the effects of slugging and contaminants

Compressor Crankcase Heater

- Protects against refrigerant migration that can occur during low ambient operation
- Factory Installed

Compressor Sound Dampening System

- Polyethylene compressor
- 2 inch thick batt fiberglass insulation
- All open edges sealed with one-inch wide hook and loop fastening tape

Optional Accessories

Compressor Low Ambient Cut-Off Switch

- Non-adjustable switch (low ambient cut-out) prevents compressor operation when outdoor temperature is below 35°F

FEATURES

CONTROLS

7 DC Inverter Control

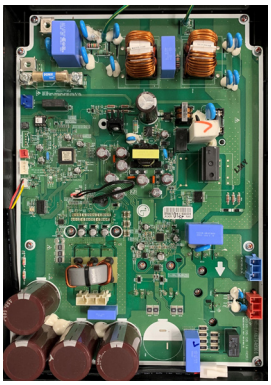

- Converts AC line voltage into filtered variable DC voltage
- Provides continuous compressor operation, while adjusting the capacity according to indoor temperature
- Adjusts compressor output in increments as small as 1%
- The accurate sensing of the cooling or heating load prevents frequent changes in capacity and ensures efficient, economical operation
- Power Factor Correction (PFC) circuit monitors the DC bus for high, low and abnormal voltage conditions to protect the compressor
- Two LEDS (red and green) indicate inverter operating status and aid in troubleshooting
- Noise filter reduces unwanted electromagnetic interference (EMI)
- Integrated on the Lennox® Communicating Control for 024 and 036 models
- Separate external inverter control for 048 and 060 models
- The inverter reactor (mounted separately) adds inductance to the line between the inverter and the compressor to limit current rise and protect the compressor

8 Lennox® Communicating Control

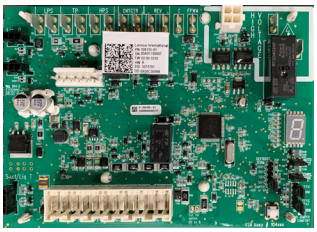

- Advanced control communicates information about various operating parameters in the heat pump to the Lennox® Communicating Thermostats to constantly maintain the highest level of comfort, performance and efficiency available
- Connections for connecting a conventional heating/cooling thermostat are also provided on the control
- Auto Configuration - On start-up the control automatically sends a description of the unit to the Lennox® Communicating Thermostat to automatically configure the features available
- Control also features:
  - Seven-Segment Display - Shows information about outdoor unit type and capacity and also displays alerts for common fault conditions (electrical and mechanical)
  - Low Voltage Protection - Prevents compressor operation when voltage is not within the specified range
  - High and low pressure switch monitoring with provisions for lockout
  - Five-Strike lockout protection protects compressor
  - Liquid line temperature and sensor monitoring
  - EEPROM storage of all local configurations
  - Non-volatile memory storage of 100 alarm codes with display of last 10 codes for troubleshooting
  - Built-in low-ambient control

NOTE - Two RAST connectors for a conventional heating/cooling thermostat are also provided for connecting to the control. A two-stage or single-stage thermostat can be used.

Low Ambient Operation

- Cooling Mode - The heat pump can operate down to 0°F outdoor air temperature in the cooling mode

NOTE - A freezestat is recommended for extra protection during low ambient cooling operation.

Heating Mode (Low Temperature Protection)

- Outdoor unit will not operate in the heating mode when the outdoor temperature is at or below –4°F
- If the unit is operating and the outdoor temperature drops below –4°F, the unit will continue to operate until the room thermostat is satisfied or the outdoor temperature drops to –15°F

Climate IQ™ Technology

- Optimizes dehumidification settings for specific climates to improve home comfort during cooling or heating operation
- Monitors regional weather conditions and automatically removes excess humidity when necessary

Lennox® Communicating Thermostat Settings:

Cooling Mode

- Three climate settings are available:
  - Dry - The system supplies higher indoor airflow at all compressor capacities, increasing efficiency by operating at a higher sensible to total ratio
  - Moderate - The system supplies indoor airflow that balances efficiency and comfort
  - Humid - The system supplies lower indoor airflow at all compressor capacities, improving humidity removal by operating at a lower sensible to total ratio

Heating Mode

- Two climate settings are available:
  - Normal - Heats the home with the highest efficiency
  - Comfort - System reduces indoor airflow, increasing supply air temperature
- Climate IQ (Auto) - Dry, Normal, Basic and Humid modes are automatically set based on the difference between the measured relative humidity and the relative humidity setting
- All modes are selected on the Lennox® Communicating Thermostat

Defrost Mode

- Enables a demand defrost cycle whenever system heating performance falls below optimum levels
- Sensing element on coil determines when defrost cycle is required and when to terminate cycle

CONTROLS (continued)

Outdoor Air Temperature Sensor
- Used with Lennox® Communicating Thermostats
- Sensor allows thermostat to display outdoor temperature
- Sensor is auto-detected when connected to thermostat

THERMOSTAT

NOTE - The EL19KPV Heat Pump can be used with a Lennox® Communicating Thermostat matched with a "communicating" indoor unit, or a conventional non-communicating thermostat matched with a "non-communicating" indoor unit.

Thermostat	Model No.	Indoor Unit Type
Communicating	S40	Communicating
Non-Communicating	E40, M40	Non-Communicating
	Conventional thermostat	

Thermostat
- Thermostat is not furnished with unit
- See page 8

CABINET

9
- Heavy-gauge steel construction
- Pre-painted powder paint cabinet finish
- Tested to the International Cyclic Salt Fog/UV Exposure Standard, ASTM D5894, for excellent corrosion protection
- Louvered heavy gauge steel panels surround unit on all four sides
- Control box is conveniently located with all controls factory wired
- Corner patch plate allows access to compressor components
- Drainage holes are provided in base section for moisture removal
- High density polyethylene unit support feet raise the unit off of the mounting surface, away from damaging moisture

Zinc-Coated Steel Unit Base
- Durable zinc-coated base section resists rust and corrosion

10 Louvered Coil Protection
- Steel louvered panels provides complete coil protection
- Panels are hinged to allow easy cleaning and servicing of coils
- Panels may be completely removed
- Interlocking tabs and slots assure tight fit on cabinet

11 Refrigerant Line Connections, Electrical Inlets and Service Valves
- Sweat connection vapor and liquid lines
- Located on corner of unit cabinet
- Vapor valve can be fully shut off, while liquid valve may be front seated to manage refrigerant charge while servicing system
- Refrigerant line connections and field wiring inlets are located in one central area of the cabinet
- See dimension drawing

Braze-Free/Press Fitting Flexibility
- Units can accommodate braze-free or press fittings for installation versatility

Optional Accessories

Snow Guards
- For use in locations where the possibility of heavy snow or freezing rain accumulation may occur
- Heavy gauge powder coated steel guard deflects snow and ice away from the outdoor fan and prevents build-up on the fan guard

CONTROL OPTIONS

S40 Smart Wi-Fi Thermostat

- Recognizes and connects to all Lennox ® Communicating products to automatically configure and control the heating/cooling system
- Advanced communicating controls in specific heating and cooling units, PureAir™ S Air Purification System and Healthy Climate® HRV/ERV (Heat/Energy) Recovery Ventilators transmit information about various operating parameters to the thermostat to constantly maintain the most comfortable and efficient operating conditions possible
- Lennox Smart Room Sensors, Lennox Wireless Extenders and Lennox Smart Air Quality Monitor can be added to the system
- One-Touch Away Mode, Smart Away™ (geo-fencing), equipment maintenance reminders and scheduling
- Smart home automation compatible with Amazon Alexa®, Google Assistant, Control4®, Building36®, Matter and IFTTT
- Lennox® Home App controls temperature, fan operation, set programs/schedules and set Away mode on a smartphone
- Lennox Smart Tech App allows the installer to commission the system and remotely turn the system on and off during setup or service call on a smartphone

E40 Smart Wi-Fi Thermostat

- 3 Htg.-2 Clg.
- 7-day, universal, programmable, touchscreen thermostat
- Controls dehumidification during cooling mode and humidification during heating mode
- Smooth Setback Recovery and compressor short-cycle protection
- One-Touch Away Mode, Smart Away™ (geo-fencing), equipment maintenance reminders and scheduling
- Smart home automation compatible with Amazon Alexa®, Google Assistant, Control4®, Building36®, Matter and IFTTT
- Lennox® Home App controls temperature, fan operation, set programs/schedules and set Away mode on a smartphone
- Lennox Smart Tech App allows the installer to commission the system and remotely turn the system on and off during setup or service call on a smartphone

M40 Smart Wi-Fi Thermostat

- 3 Htg.-2 Clg.
- 7-day, universal, programmable, touchscreen thermostat
- Smooth Setback Recovery and compressor short-cycle protection
- One-Touch Away Mode, Smart Away™ (geo-fencing), equipment maintenance reminders and scheduling
- Smart home automation compatible with Amazon Alexa®, Google Assistant, Control4®, Building36®, Matter and IFTTT
- Lennox® Home App controls temperature, fan operation, set programs/schedules and set Away mode on a smartphone
- Lennox Smart Tech App allows the installer to commission the system and remotely turn the system on and off during setup or service call on a smartphone

NOTE - Please refer to the individual Product Specifications for these products for full information.

CONTROLS - ORDERING

S40 Smart Wi-Fi Thermostat	5 x 7-1/4 x 1	**22V24**
E40 Smart Wi-Fi Thermostat	3-3/8 x 5-3/8 x 1	**30L26**
Lennox® Smart Room Sensor	4 x 5-1/2 x 3	**22V25**
Lennox® Smart Air Quality Monitor	3-5/8 x 4-3/8 x 1-3/8	**21P02**
Lennox® Wireless Extender	4 x 5-1/2 x 2-1/2	**22V26**
M40 Smart Wi-Fi Thermostat	3-5/16 x 4-5/16 x 7/8	**30L27**
Thermostat Accessories		
[1] Discharge Air Temperature Sensor (For S40, E40)		**88K38**
[2] Remote Outdoor Air Temperature Sensor (For dual-fuel and Humiditrol®)		**X2658**

[1] Optional for service diagnostics (S40/E40).

[2] Remote Outdoor Air Temperature Sensor is used with conventional (non-Lennox® Communicating) outdoor units (sensor is furnished with Lennox® Communicating outdoor units). Allows the thermostat to display outdoor temperature. Required in dual-fuel and Humiditrol® applications.

SPECIFICATIONS

Size			024	036	048	060
Nominal Tonnage			2	3	4	5
Sound Rating Number Range		dBA	62-71	61-73	67-76	64-77
Connections (Sweat)		Liquid line (OD) - in.	3/8	3/8	3/8	3/8
		Vapor line (OD) - in.	3/4	7/8	7/8	1-1/8
Compressor Type			Variable Rotary	Variable Rotary	Variable Rotary	Variable Rotary
Refrigerant (15 ft. Line Set)	[1] R-454B charge furnished		8 lbs. 6 oz.	7 lbs. 15 oz.	8 lbs. 13 oz.	9 lb. 5 oz.
Refrigerant (30 ft. Line Set)	[1] R-454B charge furnished		8 lbs. 15 oz.	8 lbs. 8 oz.	9 lbs. 6 oz.	9 lbs. 14 oz.
Indoor Unit Expansion Valve (TXV)			**26Z70**	**26Z70**	**26Z71**	**26Z72**
Outdoor Coil	Net face area - ft.²	Outer coil	17.00	17.00	23.63	23.63
		Inner coil	16.25	16.25	22.79	22.79
		Tube diameter - in.	5/16	5/16	5/16	5/16
		Rows	2	2	2	2
		Fins - in.	22	22	22	22
Outdoor Fan		HP	1/3	1/3	1/3	1/3
		Diameter - in.	22	22	22	22
		Blades	4	4	4	4
		Cfm	2642	2642	4350	3907
		Rpm	681	681	1050	941
		Watts	284	284	425	295
Shipping Data - lbs.			224	224	269	269

ELECTRICAL DATA

		Line voltage data (Volts-Phase-Hz)	208/230-1-60	208/230-1-60	208/230-1-60	208/230-1-60
		[2] Maximum overcurrent protection (MOCP) amps	25	35	50	60
		[3] Minimum circuit ampacity (MCA)	17.7	23	33.1	39.2
Compressor		Input amps	12.1	16.3	24.4	28.5
Fan Motor		Full load amps	2.6	2.6	2.6	3.6

OPTIONAL ACCESSORIES - ORDER SEPARATELY

Freezestat	3/8 in.	**93G35**	•	•	•	•
Refrigerant Line Sets Liquid x Suction OD | Insulation Thickness | Length	3/8 x 3/4 | 3/8 | 20 ft.	**89J56**	•			
	3/8 x 3/4 | 3/8 | 30 ft.	**89J57**				
	3/8 x 3/4 | 3/8 | 50 ft.	**89J59**				
	3/8 x 7/8 | 3/8 | 30 ft.	**89J60**		•	•	
	3/8 x 7/8 | 3/8 | 50 ft.	**89J62**				
	3/8 x 1-1/8 | 3/8 | 50 ft.	**73P91**				•
[4] Snow Guard	35-1/2 x 31 in.	**X8780**	•	•	•	•

NOTE - Extremes of operating range are plus 10% and minus 5% of line voltage.

[1] Refrigerant charge sufficient for the line set length listed in parenthesis. For longer line set requirements see the Installation Instructions or unit Charging Label for information about line set length and additional refrigerant charge required.

[2] HACR type breaker or fuse.

[3] Refer to National or Canadian Electrical Code manual to determine wire, fuse and disconnect size requirements.

[4] Adds 11-1/2 inches (292 mm) to unit height.

EXPANDED SOUND DATA

[1] Size	Octave Band Sound Power Levels dBA, re 10^{-12} Watts Center Frequency - HZ							[1] Sound Rating Number (dBA)	[2] Estimated Sound Pressure Level at Distance From Unit (dBA at distance in ft.)				
	125	250	500	1000	2000	4000	8000		3	5	10	15	50
024 Min.	65.5	62.0	63.8	53.4	46.8	48.0	52.8	62	54	50	44	41	28
024 Max.	69.0	69.7	69.7	64.9	60.8	59.1	57.1	71	63	59	53	50	37
036 Min.	65.6	61.6	60.3	53.5	51.2	48.7	53.0	61	53	49	43	40	27
036 Max.	70.1	67.2	69.5	66.5	64.3	65.6	59.6	73	65	61	55	52	39
048 Min.	67.3	64.9	66.3	60.4	58.9	51.0	48.8	67	59	55	49	46	33
048 Max.	70.1	70.7	74.4	71.8	66.4	66.1	56.6	76	68	64	58	55	42
060 Min.	68.0	63.4	63.9	58.4	53.5	48.8	48.2	64	56	52	46	43	30
060 Max.	71.4	70.5	72.6	72.5	69.4	65.6	57.1	77	69	65	59	56	43

NOTE - The octave sound power data does not include tonal correction.

[1] Tested according to AHRI Standard 270-2008 test conditions. Sound rating Number is the overall A-Weighted Sound Power Level (LWA), dBA (100 Hz to 10,000 Hz).

[2] Estimated sound pressure level at distance based on AHRI Standard 275-2010 method for equipment located on the ground, roof, or on side of building wall with no adjacent reflective surface within 9.8 feet. Sound pressure levels will increase based on changes to assumptions. For other applications, refer to AHRI Standard 275.

FIELD WIRING

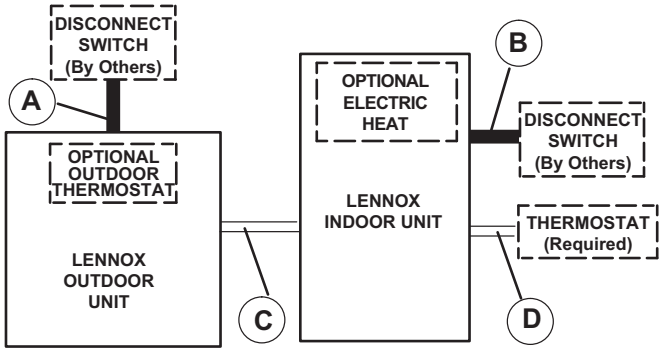

A- Two Wire Power

B- Two or Three Wire Power (size to heater capacity)

C - Lennox® Communicating Thermostat:
- Four Wire, 18AWG (RSBus)

C - Conventional Thermostat:
- Eight Wire Low Voltage, 18AWG
- Ten Wire Low Voltage, 18AWG with Optional Outdoor Thermostat

D - Lennox® Communicating Thermostat:
- Four Wire, 18 to 22AWG (RSGBus) standard thermostat cable for terminals (R, C, I+, I-).

D - Conventional Thermostat:
- Twelve Wire Low Voltage, 18AWG
- Fourteen Wire Low Voltage, 18AWG with Optional Outdoor Thermostat

NOTE - All wiring must conform to NEC or CEC and local electrical codes.

NOTE - Refer to the S40 Installation Instructions for optional wiring connections for communicating thermostats.

NOTE - Field wiring is not furnished.

INSTALLATION CLEARANCES

NOTES:

- Service Clearance – 30 in. (762 mm) on one of the sides adjacent to the Control Box.
- One of other three sides must be 36 in. (914 mm).
- One of the two remaining sides may be 12 in. (305 mm).
- The remaining side may be 6 in. (152 mm).
- 48 in. (1219 mm) clearance required on top of unit
- 24 in. (610 mm) required between two units

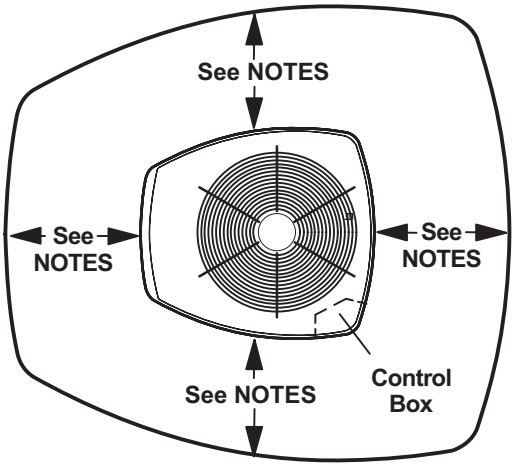

DIMENSIONS - UNIT

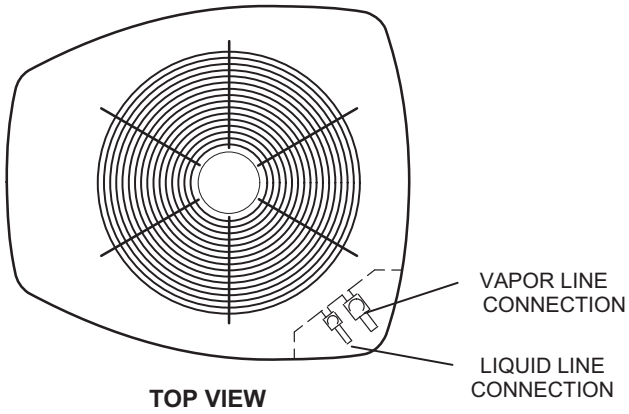

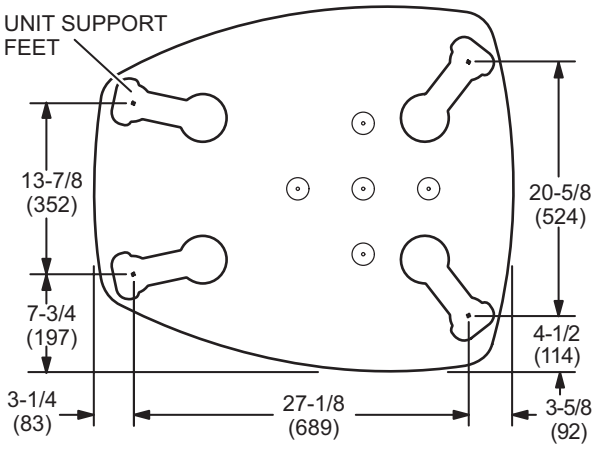

BASE SECTION
(Medium Base)

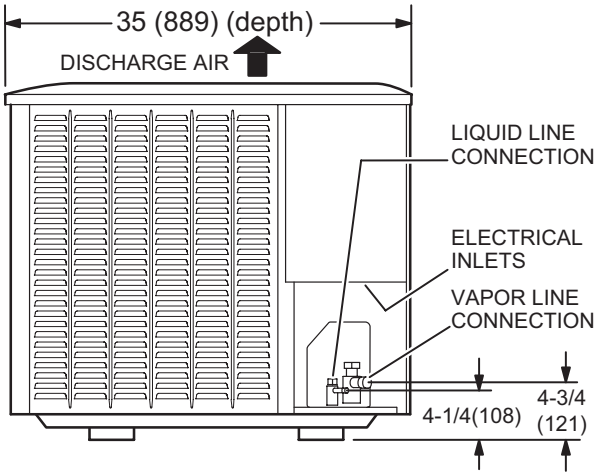

SIDE VIEW

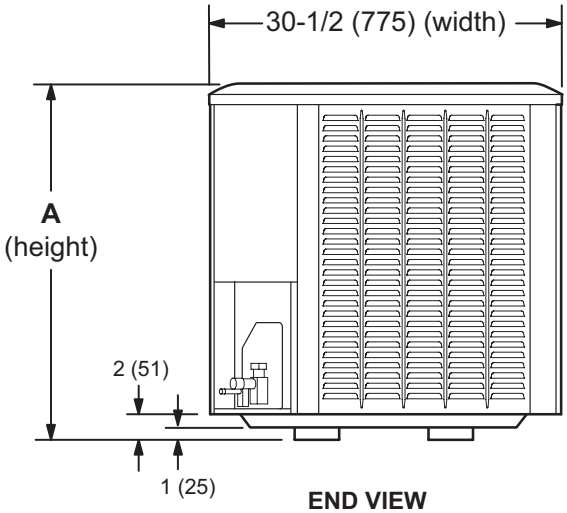

END VIEW

Size	A (Height)	
	in.	mm
024	39	991
036	39	991
048	45	1143
060	45	1143

TXV USAGE

All Lennox coils and air handlers are shipped with a factory installed TXV. In most cases, no substitution is needed.
If a different size TXV is required, it will be listed in the "TXV SUBSTITUTION" table by size. The correct TXV must be ordered separately and field installed.

Size	Order Number
024	**26Z70**
036	**26Z70**
048	**26Z71**
060	**26Z72**

AHRI STANDARD 210-240-2023

Cooling or heating capacities are net values, including the effects of blower motor heat, and do not include supplementary heat. Power input is the total power input to the compressor(s) and fan(s), plus any controls and other items required as part of the system for normal operation.

Units which do not have an indoor air-circulating blower furnished as part of the model, i.e., split system with indoor coil only, is established by subtracting from the total cooling capacity 1250 Btu/h per 1,000 cfm, and by adding the same amount to the heating capacity.

Total power input for both heating and cooling is increased by 365 W per 1,000 cfm of indoor air circulated.

TXV SUBSTITUTION - R-454B

A general guide for replacing the factory installed R-454B TXV if the indoor unit (coil/air handler) is larger or smaller than the outdoor unit.

Outdoor Unit		Indoor Unit		Indoor TXV Furnished	Indoor TXV Replacement
Size	Tons	Size	Tons		
024	2	42	3.5	**26Z71**	**26Z70**
024	2	48	4	**26Z71**	**26Z70**
024	2	49	4	**26Z71**	**26Z70**
024	2	50/60	4/5	**26Z71**	**26Z70**
024	2	51/61	4/5	**26Z71**	**26Z70**
024	2	60	5	**26Z72**	**26Z70**
036	3	42	3.5	**26Z71**	**26Z70**
036	3	48	4	**26Z71**	**26Z70**
036	3	49	4	**26Z71**	**26Z70**
036	3	50/60	4/5	**26Z71**	**26Z70**
036	3	51/61	4/5	**26Z71**	**26Z70**
036	3	60	5	**26Z72**	**26Z70**
048	4	30/36	2.5/3	**26Z70**	**26Z71**
048	4	36	3	**26Z70**	**26Z71**
048	4	60	5	**26Z72**	**26Z71**
060	5	50/60	4/5	**26Z71**	**26Z72**
060	5	51/61	4/5	**26Z71**	**26Z72**

TXV Ranges:

26Z70 - 1.5 to 3 ton systems - Use on 3 ton (036) and lower systems.

26Z71 - 3.5-4 ton systems - Use on 4 ton (048) and down to 3.5 ton (042) systems.

26Z72 - 5 ton systems - Use on 5 ton (060) systems only.

REVISIONS

Sections	Description of Change
Control Options	Updated to reflect latest product offering.

Visit us at www.Lennox.com
For the latest technical information, www.LennoxPros.com
Contact us at 1-800-9-LENNOX

NOTE - Due to Lennox' ongoing commitment to quality, Specifications, Ratings and Dimensions subject to change without notice and without incurring liability.
Improper installation, adjustment, alteration, service or maintenance can cause property damage or personal injury.
Installation and service must be performed by a qualified installer and servicing agency.

©2026 Lennox Industries, Inc.