538339-01

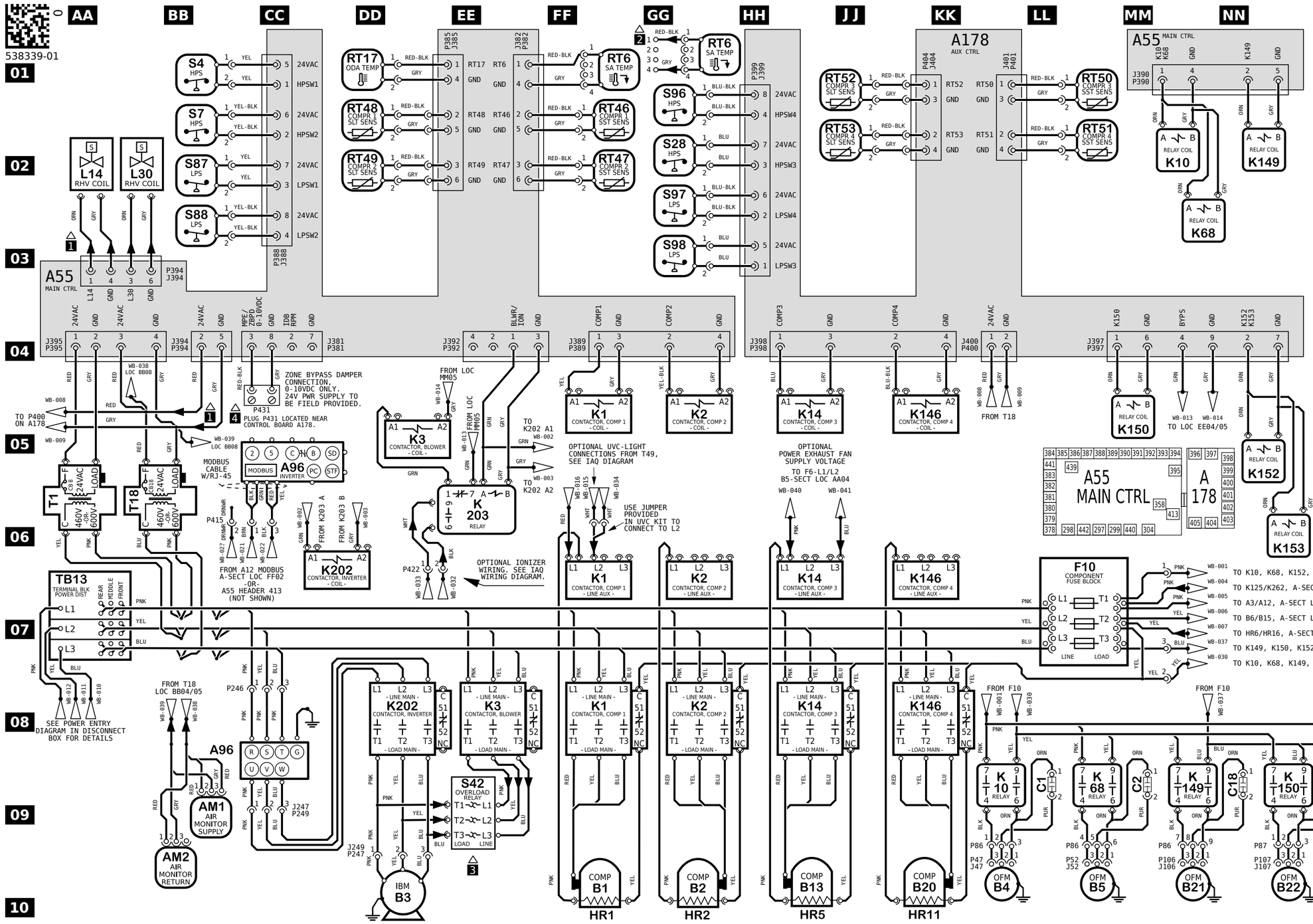

KEY LIST		
LOCATION	COMPONENT DESCRIPTION	
CC05/08	A96	CONTROL INVERTER, BLOWER
BB09	AM1, AM2	AIR MONITOR, SUPPLY/RETURN, IAQ-TVOC
FF/GG/JJ/KK10	B1, B2, B13, B20	COMPRESSOR 1, 2, 3, 4
DD10	B3	MOTOR, BLOWER
LL/MM10	B4, B5	MOTOR, OUTDOOR FAN 1, 2
NN/PP10	B22, B23	MOTOR, OUTDOOR FAN 4, 5
QQ/RR10	B21, B24	MOTOR, OUTDOOR FAN 3, 6
LL/MM09	C1, C2	CAPACITOR, OUTDOOR FAN 1, 2
PP/QQ09	C19, C20	CAPACITOR, OUTDOOR FAN 4, 5
NN/RR09	C18, C21	CAPACITOR, OUTDOOR FAN 3, 6
LL07	F10	FUSE, COMPONENT
FF/GG/JJ/KK10	HR1, HR2, HR5, HR11	HEATER, COMPRESSOR 1, 2, 3, 4
FF/GG05,06,08	K1, K2	CONTACTOR, COMPRESSOR 1, 2
JJ/KK05,06,08	K14, K146	CONTACTOR, COMPRESSOR 3, 4
DD05/EE08	K3	CONTACTOR, BLOWER
MM/NN02,LL/MM09	K10, K68, K149	RELAY, OUTDOOR FAN 1, 2, 3
MM/NN05,PP/QQ09	K150, K152, K153	RELAY, OUTDOOR FAN 4, 5, 6
DD06/08	K202	CONTACTOR, INVERTER
EE06	K203	RELAY, INVERTER CONTROL
AA02	L14, L30	VALVE, SOLENOID, REHEAT COIL 1, 2
GG01	RT6	SENSOR, A55 DISCHARGE (IMC)
DD01	RT17	SENSOR, OUTSIDE AIR TEMP
GG01/02,MM01/02	RT46, RT47, RT50, RT51	SENSOR, SAT. SUCT TEMP., COMP 1, 2, 3, 4
DD01/02,JJ01/02	RT48, RT49, RT52, RT53	SENSOR, SAT. LIQUID TEMP., COMP 1, 2, 3, 4
BB01/02,GG02/01	S4, S7, S28, S96	LIMIT, HI PRESS. SWITCH, COMP 1, 2, 3, 4
EE09	S42	OVERLOAD, RELAY, BLOWER MOTOR
BB02/03,GG03/02	S87, S88, S98, S97	SWITCH, LOW PRESS., COMP. 1, 2, 3, 4
AA06	T1	TRANSFORMER, CONTROL
BB06	T18	TRANSFORMER, CONTACTOR
AA07	TB13	TERMINAL STRIP, POWER DISTRIBUTION

△	NOTES
1	ONLY ON UNITS WITH HUMIDITROL OPTION
2	FOR REMOTE LOCATION OF RT6, ADD THE EXTENSION HARNESS
3	S42 USED ON UNITS WITH 10HP MOTORS
4	P431 MAY ONLY BE USED WHEN BLOWER IS CONFIGURED FOR CAV OPERATION.

← DENOTES OPTIONAL COMPONENTS AND WIRING

WARNING

DISCONNECT ALL POWER BEFORE SERVICING.

ELECTRIC SHOCK HAZARD, CAN CAUSE INJURY OR DEATH. UNIT MUST BE GROUNDED IN ACCORDANCE WITH NATIONAL AND LOCAL CODES.

FOR USE WITH COPPER CONDUCTORS ONLY. REFER TO UNIT RATING PLATE FOR MINIMUM CIRCUIT AMPACITY AND MAXIMUM OVERCURRENT PROTECTION SIZE.

IF ANY WIRE IN THIS APPLIANCE IS REPLACED, IT MUST BE REPLACED WITH WIRE OF LIKE SIZE, RATING AND INSULATION THICKNESS.

© 2019

Model: LGT, LCT 302, 360 - G, J-VOLT
COOLING - MSAV - WITH BYPASS

Voltage: 460V/3~/60Hz (G), 575V/3~/60Hz (J)
Supersedes: N/A Form No: 538339-01 Rev: 0

WIRING DIAGRAM FLOW

HEATING	COOLING	COOLING	ACCS	ACCS
SECTION A	SECTION B	SECTION B3/5	SECTION C	SECTION D

10x17 CUT SIZE

REV	EC NO.	DATE	BY	APVD	REVISION NOTE
---	CN-012295C	04-02-2024	RV	MXT5	ORIGINATED AT PD&R CARROLLTON, TX

538339-01

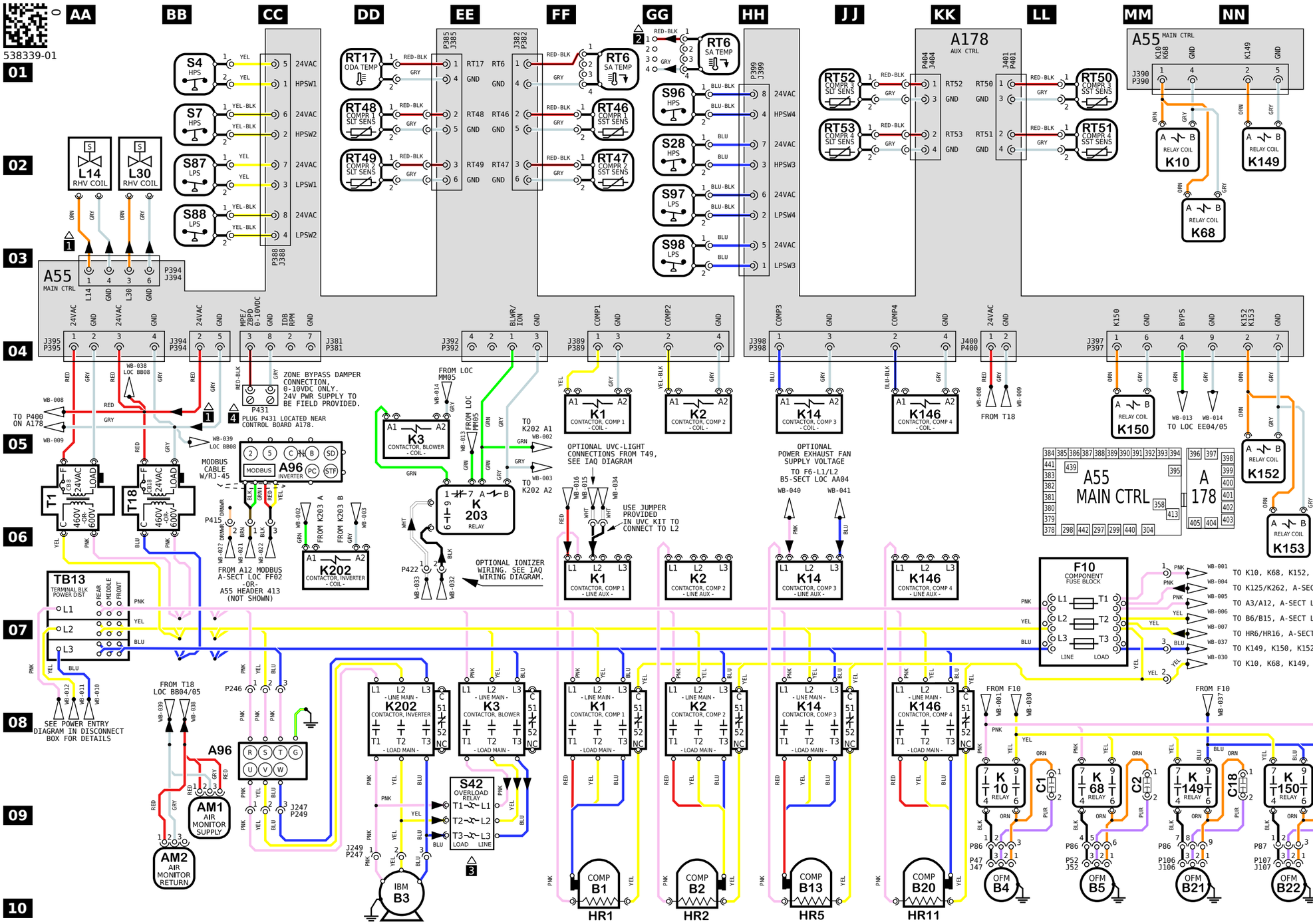

KEY LIST		
LOCATION	COMPONENT DESCRIPTION	
CC05/08	A96	CONTROL INVERTER, BLOWER
BB09	AM1, AM2	AIR MONITOR, SUPPLY/RETURN, IAQ-TVOC
FF/GG/JJ/KK10	B1, B2, B13, B20	COMPRESSOR 1, 2, 3, 4
DD10	B3	MOTOR, BLOWER
LL/MM10 NN/PP10 QQ/RR10	B4, B5 B22, B23 B21, B24	MOTOR, OUTDOOR FAN 1, 2 MOTOR, OUTDOOR FAN 4, 5 MOTOR, OUTDOOR FAN 3, 6
LL/MM09 PP/QQ09 NN/RR09	C1, C2 C19, C20 C18, C21	CAPACITOR, OUTDOOR FAN 1, 2 CAPACITOR, OUTDOOR FAN 4, 5 CAPACITOR, OUTDOOR FAN 3, 6
LL07	F10	FUSE, COMPONENT
FF/GG/JJ/KK10	HR1, HR2, HR5, HR11	HEATER, COMPRESSOR 1, 2, 3, 4
FF/GG05,06,08 JJ/KK05,06,08	K1, K2 K14, K146	CONTACTOR, COMPRESSOR 1, 2 CONTACTOR, COMPRESSOR 3, 4
DD05/EE08	K3	CONTACTOR, BLOWER
MM/NN02,LL/MM09 MM/NN05,PP/QQ09	K10, K68, K149 K150, K152, K153	RELAY, OUTDOOR FAN 1, 2, 3 RELAY, OUTDOOR FAN 4, 5, 6
DD06/08	K202	CONTACTOR, INVERTER
EE06	K203	RELAY, INVERTER CONTROL
AA02	L14, L30	VALVE, SOLENOID, REHEAT COIL 1, 2
GG01	RT6	SENSOR, A55 DISCHARGE (IMC)
DD01	RT17	SENSOR, OUTSIDE AIR TEMP
GG01/02,MM01/02	RT46, RT47, RT50, RT51	SENSOR, SAT. SUCT TEMP., COMP 1, 2, 3, 4
DD01/02,JJ01/02	RT48, RT49, RT52, RT53	SENSOR, SAT. LIQUID TEMP., COMP 1, 2, 3, 4
BB01/02,GG02/01	S4, S7, S28, S96	LIMIT, HI PRESS. SWITCH, COMP 1, 2, 3, 4
EE09	S42	OVERLOAD, RELAY, BLOWER MOTOR
BB02/03,GG03/02	S87, S88, S98, S97	SWITCH, LOW PRESS., COMP. 1, 2, 3, 4
AA06	T1	TRANSFORMER, CONTROL
BB06	T18	TRANSFORMER, CONTACTOR
AA07	TB13	TERMINAL STRIP, POWER DISTRIBUTION

△	NOTES
1	ONLY ON UNITS WITH HUMIDITROL OPTION
2	FOR REMOTE LOCATION OF RT6, ADD THE EXTENSION HARNESS
3	S42 USED ON UNITS WITH 10HP MOTORS
4	P431 MAY ONLY BE USED WHEN BLOWER IS CONFIGURED FOR CAV OPERATION.

DENOTES OPTIONAL COMPONENTS AND WIRING

WARNING

DISCONNECT ALL POWER BEFORE SERVICING.

ELECTRIC SHOCK HAZARD, CAN CAUSE INJURY OR DEATH. UNIT MUST BE GROUNDED IN ACCORDANCE WITH NATIONAL AND LOCAL CODES.

FOR USE WITH COPPER CONDUCTORS ONLY. REFER TO UNIT RATING PLATE FOR MINIMUM CIRCUIT AMPACITY AND MAXIMUM OVERCURRENT PROTECTION SIZE.

IF ANY WIRE IN THIS APPLIANCE IS REPLACED, IT MUST BE REPLACED WITH WIRE OF LIKE SIZE, RATING AND INSULATION THICKNESS.

© 2019

WIRING DIAGRAM FLOW

HEATING	COOLING	COOLING	ACCS	ACCS
SECTION A	SECTION B	SECTION B3/5	SECTION C	SECTION D

Model: LGT, LCT 302, 360 - G, J-VOLT
COOLING - MSAV - WITH BYPASS

Voltage: 460V/3~/60Hz (G), 575V/3~/60Hz (J)
Supersedes: N/A Form No: 538339-01 Rev: 0

10x17 CUT SIZE

REV	EC NO.	DATE	BY	APVD	REVISION NOTE
---	CN-012295C	04-02-2024	RV	MXT5	ORIGINATED AT PD&R CARROLLTON, TX