PACKAGED GAS / ELECTRIC

LRP13GNK

MERIT® SERIES

Ultra-Low NOx | Constant Torque Blower | Single-Phase | R-454B | 60Hz

RESIDENTIAL
PRODUCT SPECIFICATIONS (EHB)

SEER2 - 13.4
AFUE - 81%
2 to 5 Tons
Cooling Capacity - 22,600 to 57,000 Btuh
Input Gas Heating Capacity - 54,000 to 72,000 Btuh

MERIT® SERIES

MODEL NUMBER IDENTIFICATION

L RP 13 G N K 36 - 054 E P - 1 - A

Brand
L = Lennox

Product Type
RP = Residential Packaged Unit

Nominal SEER2

Unit Type
G = Packaged Gas/Electric Unit

Ultra-Low NOx
N = Units meet California Nitrogen Oxides Standard (14ng/J)

Refrigerant Type
K = R-454B

Nominal Cooling Capacity
24 = 2 tons
30 = 2.5 tons
36 = 3 tons
42 = 3.5 tons
48 = 4 tons
60 = 5 tons

Nominal Heating Capacity Input
054 = 54,000 Btuh
072 = 72,000 Btuh

Blower
E = High Efficiency Constant Torque Blower Motor

Voltage
P = 208/230V-1phase-60Hz

Major Revision Sequence
1 = 1st Generation

Minor Revision Sequence
A = 1st Generation

Form Number 211092 | April 2026
Supersedes all previous versions

NOTE - ALL MODELS ARE NATURAL GAS ONLY!

NOTE - NOT AVAILABLE IN ALL AREAS!
CONTACT YOUR NEAREST LENNOX SALES OFFICE FOR DETAILS.

CONTENTS

Approvals And Warranty 2
Blower Data 12
Control Options 6
Cooling Ratings 10
Dimensions 14
- Accessories 15
- Unit 14
Electrical Data 7
Features 3
Field Wiring 9
High Altitude Derate 9
Installation Clearances 9
Minimum Clearance To Combustible Material 9
Optional Accessories - Order Separately 8
Specifications 7
Specifications - Gas Heat 9

APPROVALS AND WARRANTY

APPROVALS

- AHRI Standard 210/240-2023 Certified
- Design Certified by ETL Intertek
- Cooling system rated according to DOE test procedures
- Heating ratings are Certified by AHRI according to U.S. Department of Energy (DOE) test procedures and Federal Trade Commission (FTC) labeling regulations
- Approved by the California Energy Commission and meets California Nitrogen Oxides Standard (NOx) limits of 14 ng/J

California Only

- These units **meet** the South Coast Air Quality Management District (SCAQMD) Rule 1111 and San Joaquin Valley Air Pollution Control District (SJVAPCD) Rule 4905 NOx emission limit (14 ng/J) and can be installed within the SCAQMD, SJVAPCD and Bay area
- All models meet UL 60335-2-40 Refrigerant Detector Requirements
- Units are ETL Certified for the U.S. and Canada
- All models with the Optional Seismic Strapping Kit installed have Seismic Certification for 2018 International Building Code (IBC) and 2019 California Building Code (CBC) ASCE 7
- Unit and components are UL bonded for grounding to meet safety standards for servicing
- Test operated at the factory before shipment ensuring dependable operation at start-up

WARRANTY

- Heat Exchanger:
  - Limited twenty years in residential applications
  - Limited ten years in non-residential applications
- Compressor:
  - Limited ten years in residential installations
  - Limited five years in non-residential installations
- All other covered components:
  - Limited five years in residential installations
  - Limited one year in non-residential installations

NOTE - Refer to Lennox Equipment Limited Warranty certificate included with unit for specific details.

FEATURES

APPLICATIONS

- Designed for outdoor installations at ground level or rooftop for residential applications

HEATING SYSTEM

Heat Exchanger Assembly
- Heavy gauge stainless steel heat exchanger
- Tubular type design
- Designed for normal expansion and contraction
- Round surfaces create minimum resistance to air flow for excellent heat transfer
- Heat exchanger has been laboratory life cycle tested in excess of industry standards
- Compact size of heat exchanger permits low overall design of furnace cabinet

Burner Orifice/Air Intake Assembly
- Burner assembly has a single orifice located between the gas valve and the air intake assembly
- Orifice is precisely matched to the burner input

Direct Spark Ignition
- Provides positive and safe main burner ignition
- Spark is intermittent and occurs only when required

Modulating Gas Control Valve
- 24 volt redundant combination modulating gas control valve combines manual shut off switch (On-Off), automatic electric valve (dual) and gas pressure regulation into a compact combination control

Variable-Speed Combustion Air Inducer
- Heavy duty variable-speed blower prepurges heat exchanger and safely vents flue products
- Pressure switch proves blower operation before allowing gas valve to open
- Operates only during heating cycle

NOTE - Inducer operates the first 10 seconds of each cooling cycle to keep flue outlet clear during the cooling season.

Thermal Switch
- Factory installed on air/fuel intake assembly
- Automatic reset
- Switch provides protection from abnormal operating conditions

Limit Control
- Factory installed behind heat exchanger access panel
- Automatic reset

Ignition Control Board
- Ignition control board with LED diagnostics

COOLING SYSTEM

R-454B Refrigerant
- Low GWP (Global Warming Potential)
- Zero ODP (Ozone Depletion Potential)
- Low Toxicity/Lower Flammability - A2L
- Unit is factory pre-charged

Evaporator and Condenser Coils
- Copper tube with aluminum fin coils

Anti-Microbial Evaporator Coil Drain Pan
- Anti-Microbial additive resists growth of mold and mildew on drain pan which improves indoor air quality and reduces drain line blockage
- Fully insulated to reduce condensation
- Drain pan overflow switch monitors condensate level in drain pan and shuts down unit if drain becomes clogged

Condenser Fan
- Weather protected heavy duty condenser fan motor
- Coated steel fan blades for long life
- Corrosion-resistant coated steel fan guard
- Internally mounted
- Totally enclosed fan motor

High Pressure Switch
- Protects the system from high pressure conditions
- Automatic reset

Loss of Charge Switch
- Protects compressor from damage from low/no refrigerant charge conditions
- SPST, normally-closed
- Automatic reset

Service Valves
- Fully serviceable brass valves installed in discharge and liquid lines

LOW GWP REFRIGERANT DETECTION SYSTEM (RDS)

- Complies with UL 60335-2-40 approved standard
- Required for all systems using R-454B refrigerant
- Factory installed on all units
- Consists of a leak detection sensor(s) and a mitigation control
- Ensures safe operation for systems equipped with R-454B refrigerant
- Sensor(s) monitors indoor coil area for any refrigerant leaks if they occur
- If a leak is detected the refrigerant detection system will prevent compressor and heating operation until a leak is no longer detected
- Refrigeration detection system energizes blower while a leak is detected to mitigate any concentrations of refrigerant from the unit and the system

FEATURES

COMPRESSOR

- Rotary Compressor furnished on 24 and 30 models
- Scroll Compressor furnished on 36 through 60 models
- High volumetric efficiency
- Uniform suction flow
- Constant discharge flow
- Quiet operation
- Low gas pulses during compression reduces operational sound levels
- Compressor motor is internally protected from excessive current and temperature
- Compressor is installed in the unit on resilient rubber mounts for vibration free operation

Optional Accessories

Compressor Crankcase Heater (36 through 60 models)
- Protects against refrigerant migration that can occur during low ambient operation

Compressor Hard Start Kit
- A PSC compressor motor does not normally need a potential relay and start capacitor
- In cases of low voltage, this kit may be required to increase the compressor starting torque

Compressor Timed-Off Control
- Prevents compressor short-cycling
- Allows time for suction and discharge pressure to equalize
- Permits compressor start-up in an unloaded condition
- Automatic reset
- Five minute delay between compressor shut-off and start-up

Low Ambient Kit (40°F)
- Cycles the outdoor fan while allowing compressor operation in the cooling cycle
- This intermittent fan operation allows the system to operate without icing the evaporator coil and losing capacity
- Designed for use in ambient temperatures no lower than 40°F

NOTE - A crankcase heater must be installed on the compressor.

SUPPLY AIR BLOWER

- Direct drive blower
- Blower wheel is statically and dynamically balanced
- Resiliently mounted
- Blower assembly easily removed for servicing

Constant Torque Blower Motor
- DC Brushless Motor
- High Efficiency Constant Torque
- ECM (Electronically Commutated Motor)
- Motor is programmed to provide constant torque at each of the selectable speeds
- Fixed blower “On” delay prevents cold air from entering system during gas heating demand
- See Blower Performance tables

AIR FILTER (required)

Internal Filter Rack Kits
- Available for 1 in. thick filters
- Filter rails mount internal to unit

NOTE - Filters must be field provided.

CONTROLS

Refrigerant Detection System (RDS) Control
- Monitors leak detection sensor
- Connections for external RDS alarm system (not furnished)
- LED for power, monitoring and sensor status
- Test/Reset button for troubleshooting

24 Volt Transformer
- 40VA transformer furnished and factory installed in control area

Optional Accessories

Thermostat
- Thermostat is not furnished with unit
- See Page 6

FEATURES

CABINET

- Conditioned areas insulated with foil faced insulation
- Minimizes heat loss and reduce operating sound levels
- Powder paint for maximum durability
- Easy service access
- Steel louvered panels provides complete coil protection
- Full perimeter heavy-gauge galvanized steel base rail
- Base rails have rigging holes
- Two sides of the base rail have forklift slots
- Raised edges around duct and power entry openings in the bottom of the unit for water protection

Airflow Choice

- Units are shipped with all air openings sealed
  - For downflow (vertical) applications, remove the downflow duct covers
  - For horizontal applications, remove the horizontal duct covers

Gas Piping Inlets, Electrical Inlets and Service Valves

- Standard gas piping and field wiring inlets are located in one central area of the cabinet
- See dimension drawing
- Gauge ports are located inside the cabinet

Optional Accessories

Base Rail Opening Closure Kit

- Kit consists of panels and hardware to cover base rail rigging holes and forklift slot openings

Bottom Gas Entry Kit

- Allows gas piping through the unit base pan

Bottom Power Entry Kit

- Allows field wiring through the unit base pan

Rectangular to Round Duct Adaptor Kits

- Downflow or horizontal kits available
- Converts rectangular supply and return air openings on unit cabinet to round diameter
- Several sizes available

Clip Curb (Full Perimeter)

- Interlocking tabs fasten corners together
- No tools required
- Fully gasketed around curb perimeter and supply and return openings
- Available in 8, 14, 18 and 24 inch heights
- Shipped knocked down

Adjustable Pitch Roof Curb (Full Perimeter)

- Fully adjustable pitch curb provides a level platform for packaged units
- Allows flexible installations on roofs with sloped or uneven angles
- Adjustable from 2/12 to 6/12 pitch
- Fully gasketed around curb perimeter and supply and return openings
- Clip Curb (knock-down) and Welded models available

All Curbs

- IBC 2018 compliant
- CBC 2019 compliant
- Seismic rating - SDS 2.0g, z/h=1, Ip=1.5
- Wind rating - 240 mph (Lateral), 214 mph (Uplift)
- Maximum load rating - 800 lbs

Adaptor Curbs (not shown)

- Curbs are regionally sourced
- Dimensions vary based upon the source

NOTE - Contact your local sales representative for a detailed cut sheet with applicable dimensions.

Strapping Kit - Seismic

- Heavy-gauge galvanized steel
- Kit contains 4 brackets and mounting hardware

CONTROL OPTIONS

E40 Smart Wi-Fi Thermostat

- 3 Htg.-2 Clg.
- 7-day, universal, programmable, touchscreen thermostat
- Controls dehumidification during cooling mode and humidification during heating mode
- Smooth Setback Recovery and compressor short-cycle protection
- One-Touch Away Mode, Smart Away™ (geo-fencing), equipment maintenance reminders and scheduling
- Smart home automation compatible with Amazon Alexa®, Google Assistant, Control4®, Building36®, Matter and IFTTT
- Lennox® Home App controls temperature, fan operation, set programs/schedules and set Away mode on a smartphone
- Lennox Smart Tech App allows the installer to commission the system and remotely turn the system on and off during setup or service call on a smartphone

L40 Smart Wi-Fi Thermostat

- 2 Htg.-1 Clg.
- 7-day, universal, programmable, touchscreen thermostat
- Provides temperature control for gas, electric and heat pumps for single-stage heating or cooling systems (including dual-fuel operation)
- One-Touch Away Mode, Smart Away™ (geo-fencing), equipment maintenance reminders and scheduling
- Smooth Setback Recovery and compressor short-cycle protection
- Smart home automation compatible with Amazon Alexa®, Google Assistant, Control4®, Building36®, Matter and IFTTT
- Lennox® Home App controls temperature, fan operation, set programs/schedules and set Away mode on a smartphone
- Lennox Smart Tech App allows the installer to commission the system and remotely turn the system on and off during setup or service call on a smartphone

NOTE - Two-stage heating for Dual-Fuel Heat Pump applications only

M40 Smart Wi-Fi Thermostat

- 3 Htg.-2 Clg.
- 7-day, universal, programmable, touchscreen thermostat
- Smooth Setback Recovery and compressor short-cycle protection
- One-Touch Away Mode, Smart Away™ (geo-fencing), equipment maintenance reminders and scheduling
- Smart home automation compatible with Amazon Alexa®, Google Assistant, Control4®, Building36®, Matter and IFTTT
- Lennox® Home App controls temperature, fan operation, set programs/schedules and set Away mode on a smartphone
- Lennox Smart Tech App allows the installer to commission the system and remotely turn the system on and off during setup or service call on a smartphone

NOTE - Please refer to the individual Product Specifications for these products for full information.

CONTROLS - ORDERING

E40 Smart Wi-Fi Thermostat	3-3/8 x 5-3/8 x 1	**30L26**
Lennox® Smart Room Sensor	4 x 5-1/2 x 3	**22V25**
Lennox® Smart Air Quality Monitor	3-5/8 x 4-3/8 x 1-3/8	**21P02**
Lennox® Wireless Extender	4 x 5-1/2 x 2-1/2	**22V26**
L40 Smart Wi-Fi Thermostat	2-13/16 x 2-13/16 x 1/4	**27V51**
M40 Smart Wi-Fi Thermostat	3-5/16 x 4-5/16 x 7/8	**30L27**
Thermostat Accessories		
[1] Discharge Air Temperature Sensor (For E40)		**88K38**
[2] Remote Outdoor Air Temperature Sensor (For dual-fuel and Humiditrol®)		**X2658**

[1] Optional for service diagnostics (E40).

[2] Remote Outdoor Air Temperature Sensor is used with conventional (non-Lennox® Communicating) outdoor units (sensor is furnished with Lennox® Communicating outdoor units). Allows the thermostat to display outdoor temperature. Required in dual-fuel and Humiditrol® applications.

SPECIFICATIONS

Size		24	30	36	42	48	60
Nominal Tonnage		2	2.5	3	3.5	4	5
Gas Heat Available - See Page Page 9		-054	-054	-054	-072	-072	-072
Cooling Performance	Total cooling capacity - Btuh	22,600	28,400	33,400	40,000	44,500	57,500
	[1] SEER2 (Btuh/Watt)	13.4	13.4	13.4	13.4	13.4	13.4
	[1] EER2 (Btuh/Watt)	10.6	10.6	10.6	10.6	10.6	10.6
[2] Sound Rating Number	dBA	77	79	78	78	77	78
Refrigerant	Type	R-454B	R-454B	R-454B	R-454B	R-454B	R-454B
	Charge	4 lbs. 6 oz.	4 lbs. 9 oz.	4 lbs. 8 oz.	5 lbs. 6 oz.	5 lbs. 10 oz.	7 lbs. 13 oz.
Compressor Type (number)		Rotary (1)	Rotary (1)	Scroll (1)	Scroll (1)	Scroll (1)	Scroll (1)
Outdoor Coil	Net face area - ft.^{2}	14.6	16.4	16.4	19.5	19.5	16.6
	Tube Diameter	5/16	5/16	5/16	5/16	5/16	5/16
	Rows	1	1	1	1	1	2
	Fins - in.	26	26	26	26	26	22
Outdoor Fan	HP	1/6	1/6	1/6	1/4	1/4	1/4
	Diameter - in.	22	22	22	24	24	24
	Blades	4	4	4	3	3	3
Indoor Coil	Net face area - ft.^{2}	4.4	4.4	4.4	6.8	6.8	6.8
	Tube diameter - in.	3/8	5/16	5/16	5/16	5/16	3/8
	Rows	2	3	3	3	3	3
	Fins - in.	16	16	15	15	15	15
	Condensate drain size (NPT) - in.	3/4	3/4	3/4	3/4	3/4	3/4
Indoor Blower	HP	1/3	1/2	1/2	3/4	3/4	1
	Wheel (Number) diameter x width - in.	(1) 10 x 6	(1) 10 x 6	(1) 10 x 8	(1) 10 x 10	(1) 10 x 10	(1) 12 x 9
Net weight of basic unit - lbs.		407	414	430	522	525	557
Shipping weight of basic unit (1 Pkg.) - lbs.		412	419	435	527	530	562

ELECTRICAL DATA

Line voltage data (Volts-Phase-Hz)		**208/230V-1-60**					
[3] Maximum overcurrent protection (MOCP) amps		20	25	35	40	45	60
[4] Minimum Circuit Ampacity (MCA)		14.8	17.5	22.9	26.5	28.7	39.7
Compressor	Rated load amps	8.8	11.1	14.3	16.7	18.0	24.3
Outdoor Coil Fan Motor	Full load amps	1.0	1.0	1.0	1.7	1.7	1.7
Indoor Blower Motor	Full load amps	2.8	2.6	4.1	3.9	4.5	7.6

NOTE-Extremes of operating range are plus and minus 10% of line voltage.

[1] AHRI Certified to AHRI Standard 210/240; 95°F outdoor air temperature, 80°F db/67°F wb entering evaporator air.

[2] Sound Rating Number rated in accordance with test conditions included in AHRI Standard 270.

[3] HACR type circuit breaker or fuse.

[4] Refer to National or Canadian Electrical Code manual to determine wire, fuse and disconnect size requirements.

OPTIONAL ACCESSORIES - ORDER SEPARATELY

Item		Order Number	Size 24	30	36	42	48	60
COOLING SYSTEM								
Compressor Crankcase Heater		**27U17**			•	•		
		27P79					•	•
Compressor Hard Start Kit		**10J42**	•	•	•			•
		88M91				•	•	
Compressor Timed-Off Control		**47J28**	•	•	•	•	•	•
Low Ambient Kit (40°F)		**21D20**	•	•	•	•	•	•
CABINET								
Base Rail Opening Closure Kit		**21J84**	•	•	•	•	•	•
Rectangular to Round Duct Adaptor Kits	Downflow - 14 in. dia.	**20X82**	•	•	•			
	- 14 in. dia.	**21D26**				•	•	•
	Horizontal - 14 in. dia.	**21J92**	•	•	•			
	- 14 in. dia.	**21D24**				•	•	•
	- 16 in. dia.	**22U78**				•	•	•
	- 18 in. dia.	**22U79**				•	•	•
HEATING SYSTEM								
Bottom Gas Entry Kit		**22G63**	•	•	•	•	•	•
ELECTRICAL								
Bottom Power Entry Kit		**21J78**	•	•	•	•	•	•
INDOOR AIR QUALITY								
[1] Internal Filter Rack Kit (filters not furnished)	(1) 20 x 20 + (1) 14 x 20	**11U73**	•	•	•			
	(2) 20 x 20	**11U74**				•	•	•
ROOF CURBS								
Clip Curbs								
8 in height		**21J13**	•	•	•			
		21J17				•	•	•
14 in height		**21J14**	•	•	•			
		21J19				•	•	•
18 in height		**21J15**	•	•	•			
		21J20				•	•	•
24 in height		**21J16**	•	•	•			
		21J25				•	•	•
Adjustable Pitch Roof Curbs								
Welded Curbs		**22V54**	•	•	•			
		22V55				•	•	•
Clip Curbs		**21J26**	•	•	•			
		21U04				•	•	•
Strapping Kits for Roof Curbs								
Strapping Kit - Seismic		**21J75**	•	•	•	•	•	•

[1] Filters are not furnished and must be field provided.

SPECIFICATIONS - GAS HEAT

Size		24, 30, 36	42, 48, 60
Heating Input		**-054**	**-072**
Heating Capacity Btuh	Input	54,000	72,000
	Output	44,000	58,000
[1] AFUE		81%	81%
Temperature Rise - °F		30 - 60	25 - 55
Gas Supply Connection (FPT) - in.		1/2	1/2
Min. Recommended Gas Supply Pressure		5 in. w.g. Natural Gas	

[1] Annual Fuel Utilization Efficiency based on U.S. DOE test procedures and FTC labeling regulations.

HIGH ALTITUDE DERATE

Units may be installed at altitudes up to 4500 feet above sea level without any modification.
NOTE - Units are not approved for installation above 4500 feet.

FIELD WIRING

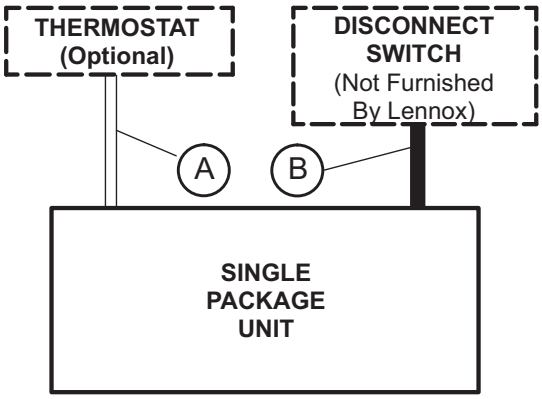

A − Five Wire Low Voltage (Electronic)

B − Two Wire Power (See Electrical Data Table)

− Field Wiring Not Furnished −

INSTALLATION CLEARANCES

	in.	mm
Front (heat exchanger access)	24	610
Right Side (blower access)	24	610
Left Side (evaporator coil access)	24	610
Back	0	0
Top	48	1219

MINIMUM CLEARANCE TO COMBUSTIBLE MATERIAL

	in.	mm
Front	0	0
Back	0	0
Right Side (vent cover)	12	305
Left Side	0	0
Top	0	0
Below Unit	0	0

COOLING RATINGS

NOTE − For Temperatures and Capacities not shown in tables, see bulletin − Cooling Unit Rating Table Correction Factor Data in Miscellaneous Engineering Data section.

2 TON - LRP13GNK024

Entering Wet Bulb Temperature	Total Air Volume	Outdoor Air Temperature Entering Outdoor Coil																			
		85°F					95°F					105°F					115°F				
		Total Cool Cap.	Comp. Motor Input	Sensible To Total Ratio (S/T) Dry Bulb			Total Cool Cap.	Comp. Motor Input	Sensible To Total Ratio (S/T) Dry Bulb			Total Cool Cap.	Comp. Motor Input	Sensible To Total Ratio (S/T) Dry Bulb			Total Cool Cap.	Comp. Motor Input	Sensible To Total Ratio (S/T) Dry Bulb		
	cfm	kBtuh	kW	75°F	80°F	85°F	kBtuh	kW	75°F	80°F	85°F	kBtuh	kW	75°F	80°F	85°F	kBtuh	kW	75°F	80°F	85°F
59°F	650	21.4	1.35	.89	1.00	1.00	20.6	1.52	.91	1.00	1.00	19.8	1.71	.93	1.00	1.00	18.9	1.93	.96	1.00	1.00
	830	23.2	1.35	.96	1.00	1.00	22.2	1.52	.98	1.00	1.00	21.4	1.72	1.00	1.00	1.00	20.2	1.94	1.00	1.00	1.00
	1000	24.4	1.34	1.00	1.00	1.00	23.4	1.52	1.00	1.00	1.00	22.2	1.72	1.00	1.00	1.00	21.2	1.94	1.00	1.00	1.00
63°F	650	22.4	1.35	.74	.86	.98	21.4	1.52	.76	.88	1.00	20.4	1.71	.77	.90	1.00	19.3	1.93	.79	.92	1.00
	830	23.6	1.34	.79	.93	1.00	22.6	1.52	.80	.95	1.00	21.4	1.72	.82	.97	1.00	20.2	1.94	.84	1.00	1.00
	1000	24.6	1.34	.83	.99	1.00	23.4	1.52	.85	1.00	1.00	22.4	1.72	.87	1.00	1.00	21.2	1.94	.90	1.00	1.00
67°F	650	23.8	1.34	.60	.72	.84	22.8	1.52	.61	.73	.85	21.6	1.72	.62	.75	.87	20.4	1.94	.63	.77	.90
	830	25.0	1.34	.63	.77	.90	24.0	1.52	.64	.78	.92	22.6	1.72	.66	.81	.95	21.4	1.95	.67	.83	.98
	1000	26.0	1.33	.66	.81	.96	24.6	1.52	.68	.83	.98	23.2	1.72	.69	.85	1.00	22.0	1.95	.71	.88	1.00
71°F	650	25.0	1.34	.46	.59	.70	23.8	1.52	.47	.59	.72	22.6	1.72	.47	.61	.73	21.4	1.95	.49	.62	.75
	830	26.4	1.33	.48	.62	.75	25.2	1.52	.49	.63	.76	23.8	1.72	.49	.65	.79	22.4	1.95	.50	.67	.81
	1000	27.4	1.32	.50	.65	.79	26.0	1.51	.51	.67	.81	24.6	1.72	.51	.68	.84	23.2	1.96	.52	.70	.86

2.5 TON - LRP13GNK030

Entering Wet Bulb Temperature	Total Air Volume	Outdoor Air Temperature Entering Outdoor Coil																			
		85°F					95°F					105°F					115°F				
		Total Cool Cap.	Comp. Motor Input	Sensible To Total Ratio (S/T) Dry Bulb			Total Cool Cap.	Comp. Motor Input	Sensible To Total Ratio (S/T) Dry Bulb			Total Cool Cap.	Comp. Motor Input	Sensible To Total Ratio (S/T) Dry Bulb			Total Cool Cap.	Comp. Motor Input	Sensible To Total Ratio (S/T) Dry Bulb		
	cfm	kBtuh	kW	75°F	80°F	85°F	kBtuh	kW	75°F	80°F	85°F	kBtuh	kW	75°F	80°F	85°F	kBtuh	kW	75°F	80°F	85°F
59°F	800	27.4	1.65	.94	1.00	1.00	26.4	1.87	.97	1.00	1.00	25.2	2.10	.99	1.00	1.00	23.8	2.37	1.00	1.00	1.00
	1000	29.2	1.66	1.00	1.00	1.00	28.0	1.88	1.00	1.00	1.00	27.0	2.12	1.00	1.00	1.00	25.4	2.40	1.00	1.00	1.00
	1200	30.6	1.66	1.00	1.00	1.00	29.4	1.88	1.00	1.00	1.00	28.0	2.13	1.00	1.00	1.00	26.6	2.41	1.00	1.00	1.00
63°F	800	28.4	1.66	.78	.91	1.00	27.2	1.87	.80	.93	1.00	25.6	2.11	.81	.96	1.00	24.2	2.37	.84	.99	1.00
	1000	29.6	1.66	.84	.99	1.00	28.2	1.88	.86	1.00	1.00	27.0	2.12	.88	1.00	1.00	25.4	2.40	.91	1.00	1.00
	1200	30.6	1.66	.90	1.00	1.00	29.4	1.88	.92	1.00	1.00	28.0	2.13	.95	1.00	1.00	26.6	2.41	.98	1.00	1.00
67°F	800	30.0	1.66	.63	.76	.88	28.6	1.88	.64	.78	.91	27.2	2.13	.65	.80	.93	25.6	2.40	.67	.82	.96
	1000	31.4	1.66	.67	.82	.96	29.8	1.89	.68	.84	.99	28.2	2.14	.69	.86	1.00	26.6	2.41	.72	.90	1.00
	1200	32.2	1.66	.71	.88	1.00	30.6	1.89	.73	.90	1.00	29.0	2.15	.74	.93	1.00	27.4	2.43	.76	.96	1.00
71°F	800	31.6	1.66	.49	.62	.74	30.2	1.89	.50	.63	.76	28.8	2.14	.50	.64	.78	27.2	2.42	.51	.66	.80
	1000	33.0	1.66	.52	.66	.80	31.4	1.89	.51	.68	.82	29.8	2.15	.53	.69	.85	28.2	2.44	.54	.71	.88
	1200	34.0	1.66	.53	.70	.86	32.4	1.89	.54	.72	.88	30.6	2.16	.55	.74	.91	28.8	2.44	.57	.77	.95

3 TON - LRP13GNK036

Entering Wet Bulb Temperature	Total Air Volume	Outdoor Air Temperature Entering Outdoor Coil																			
		85°F					95°F					105°F					115°F				
		Total Cool Cap.	Comp. Motor Input	Sensible To Total Ratio (S/T) Dry Bulb			Total Cool Cap.	Comp. Motor Input	Sensible To Total Ratio (S/T) Dry Bulb			Total Cool Cap.	Comp. Motor Input	Sensible To Total Ratio (S/T) Dry Bulb			Total Cool Cap.	Comp. Motor Input	Sensible To Total Ratio (S/T) Dry Bulb		
	cfm	kBtuh	kW	75°F	80°F	85°F	kBtuh	kW	75°F	80°F	85°F	kBtuh	kW	75°F	80°F	85°F	kBtuh	kW	75°F	80°F	85°F
59°F	1000	32.4	2.01	.94	1.00	1.00	31.4	2.27	.96	1.00	1.00	30.0	2.57	.98	1.00	1.00	28.6	2.91	1.00	1.00	1.00
	1200	34.2	2.01	1.00	1.00	1.00	33.0	2.28	1.00	1.00	1.00	31.8	2.58	1.00	1.00	1.00	30.2	2.92	1.00	1.00	1.00
	1440	35.8	2.02	1.00	1.00	1.00	34.6	2.29	1.00	1.00	1.00	33.0	2.58	1.00	1.00	1.00	31.6	2.93	1.00	1.00	1.00
63°F	1000	33.8	2.01	.78	.91	1.00	32.2	2.28	.79	.93	1.00	30.8	2.57	.81	.96	1.00	29.4	2.92	.83	.98	1.00
	1200	34.8	2.02	.83	.97	1.00	33.6	2.28	.84	.99	1.00	32.0	2.58	.86	1.00	1.00	30.2	2.92	.89	1.00	1.00
	1440	36.0	2.02	.88	1.00	1.00	34.6	2.29	.90	1.00	1.00	33.0	2.58	.92	1.00	1.00	31.6	2.93	.95	1.00	1.00
67°F	1000	35.6	2.02	.63	.76	.88	34.0	2.28	.64	.78	.90	32.6	2.58	.65	.79	.93	30.8	2.92	.66	.81	.96
	1200	36.8	2.02	.66	.80	.95	35.2	2.29	.67	.82	.97	33.6	2.59	.69	.84	.99	31.8	2.93	.70	.87	1.00
	1440	37.8	2.02	.70	.86	1.00	36.2	2.29	.71	.88	1.00	34.4	2.59	.73	.91	1.00	32.4	2.93	.75	.94	1.00
71°F	1000	37.4	2.02	.49	.62	.74	36.0	2.29	.49	.63	.75	34.2	2.59	.50	.64	.77	32.6	2.93	.51	.66	.79
	1200	38.5	2.03	.51	.65	.79	37.0	2.30	.51	.66	.81	35.4	2.60	.52	.68	.83	33.4	2.94	.53	.70	.85
	1440	39.5	2.03	.53	.69	.84	38.0	2.30	.53	.71	.86	36.2	2.60	.55	.73	.89	34.4	2.94	.57	.75	.92

COOLING RATINGS

NOTE − For Temperatures and Capacities not shown in tables, see bulletin − Cooling Unit Rating Table Correction Factor Data in Miscellaneous Engineering Data section.

3.5 TON - LRP13GNK042

Entering Wet Bulb Temperature	Total Air Volume	Outdoor Air Temperature Entering Outdoor Coil																			
		85°F					95°F					105°F					115°F				
		Total Cool Cap.	Comp. Motor Input	Sensible To Total Ratio (S/T) Dry Bulb			Total Cool Cap.	Comp. Motor Input	Sensible To Total Ratio (S/T) Dry Bulb			Total Cool Cap.	Comp. Motor Input	Sensible To Total Ratio (S/T) Dry Bulb			Total Cool Cap.	Comp. Motor Input	Sensible To Total Ratio (S/T) Dry Bulb		
	cfm	kBtuh	kW	75°F	80°F	85°F	kBtuh	kW	75°F	80°F	85°F	kBtuh	kW	75°F	80°F	85°F	kBtuh	kW	75°F	80°F	85°F
59°F	1200	41.0	2.49	.95	1.00	1.00	39.5	2.81	.96	1.00	1.00	37.8	3.16	.98	1.00	1.00	36.4	3.56	1.00	1.00	1.00
	1450	43.5	2.48	1.00	1.00	1.00	42.0	2.80	1.00	1.00	1.00	40.0	3.15	1.00	1.00	1.00	38.5	3.56	1.00	1.00	1.00
	1750	45.5	2.47	1.00	1.00	1.00	44.0	2.79	1.00	1.00	1.00	42.0	3.15	1.00	1.00	1.00	40.0	3.56	1.00	1.00	1.00
63°F	1200	42.5	2.49	.78	.92	1.00	40.5	2.80	.79	.94	1.00	38.5	3.16	.81	.96	1.00	36.8	3.56	.83	.98	1.00
	1450	44.0	2.48	.83	.98	1.00	42.5	2.80	.84	.99	1.00	40.0	3.15	.87	1.00	1.00	38.5	3.56	.89	1.00	1.00
	1750	46.0	2.47	.89	1.00	1.00	44.0	2.79	.91	1.00	1.00	42.0	3.15	.93	1.00	1.00	40.5	3.56	.96	1.00	1.00
67°F	1200	44.5	2.47	.63	.76	.89	43.0	2.79	.64	.78	.91	41.0	3.15	.65	.79	.93	39.0	3.56	.65	.81	.96
	1450	46.5	2.46	.66	.81	.95	44.5	2.79	.68	.83	.97	42.5	3.15	.68	.85	.99	40.0	3.56	.71	.87	1.00
	1750	48.0	2.45	.70	.87	1.00	45.5	2.78	.72	.89	1.00	43.5	3.14	.72	.92	1.00	41.5	3.56	.74	.94	1.00
71°F	1200	47.0	2.46	.48	.62	.74	45.0	2.78	.49	.63	.76	43.5	3.14	.50	.64	.77	41.0	3.56	.51	.66	.79
	1450	49.0	2.44	.50	.65	.80	47.0	2.77	.51	.67	.82	44.5	3.14	.52	.68	.83	42.5	3.56	.53	.69	.86
	1750	50.5	2.43	.53	.70	.86	48.0	2.76	.53	.71	.88	46.0	3.13	.55	.73	.90	43.5	3.55	.56	.75	.94

4 TON - LRP13GNK048

Entering Wet Bulb Temperature	Total Air Volume	Outdoor Air Temperature Entering Outdoor Coil																			
		85°F					95°F					105°F					115°F				
		Total Cool Cap.	Comp. Motor Input	Sensible To Total Ratio (S/T) Dry Bulb			Total Cool Cap.	Comp. Motor Input	Sensible To Total Ratio (S/T) Dry Bulb			Total Cool Cap.	Comp. Motor Input	Sensible To Total Ratio (S/T) Dry Bulb			Total Cool Cap.	Comp. Motor Input	Sensible To Total Ratio (S/T) Dry Bulb		
	cfm	kBtuh	kW	75°F	80°F	85°F	kBtuh	kW	75°F	80°F	85°F	kBtuh	kW	75°F	80°F	85°F	kBtuh	kW	75°F	80°F	85°F
59°F	1300	43.5	2.59	.94	1.00	1.00	42.0	2.96	.96	1.00	1.00	40.5	3.37	.98	1.00	1.00	38.5	3.84	1.00	1.00	1.00
	1600	46.0	2.60	1.00	1.00	1.00	44.5	2.97	1.00	1.00	1.00	42.5	3.39	1.00	1.00	1.00	40.5	3.85	1.00	1.00	1.00
	1900	48.0	2.62	1.00	1.00	1.00	46.5	2.99	1.00	1.00	1.00	44.5	3.40	1.00	1.00	1.00	42.5	3.86	1.00	1.00	1.00
63°F	1300	45.0	2.60	.77	.91	1.00	43.5	2.97	.79	.92	1.00	41.0	3.38	.80	.95	1.00	39.0	3.85	.83	.98	1.00
	1600	47.0	2.61	.83	.98	1.00	45.0	2.98	.84	1.00	1.00	43.0	3.39	.86	1.00	1.00	41.0	3.86	.89	1.00	1.00
	1900	48.0	2.62	.88	1.00	1.00	46.5	2.99	.90	1.00	1.00	45.0	3.40	.92	1.00	1.00	42.5	3.86	.95	1.00	1.00
67°F	1300	47.5	2.61	.63	.75	.88	45.5	2.98	.63	.77	.90	43.5	3.39	.64	.79	.92	41.0	3.86	.66	.81	.95
	1600	49.5	2.62	.66	.81	.95	47.5	2.99	.67	.83	.97	45.0	3.40	.69	.85	1.00	43.0	3.86	.70	.87	1.00
	1900	51.0	2.63	.70	.86	1.00	49.0	3.00	.71	.88	1.00	46.5	3.40	.72	.91	1.00	44.0	3.87	.75	.93	1.00
71°F	1300	50.0	2.62	.48	.61	.73	48.0	2.99	.49	.62	.75	46.0	3.40	.49	.63	.77	43.5	3.86	.50	.65	.79
	1600	52.0	2.63	.51	.65	.79	50.0	3.00	.51	.66	.81	47.5	3.41	.52	.68	.83	45.0	3.87	.53	.70	.86
	1900	53.5	2.63	.53	.69	.85	51.0	3.00	.54	.70	.87	48.5	3.41	.54	.72	.89	46.0	3.87	.56	.74	.92

5 TON - LRP13GNK060

Entering Wet Bulb Temperature	Total Air Volume	Outdoor Air Temperature Entering Outdoor Coil																			
		85°F					95°F					105°F					115°F				
		Total Cool Cap.	Comp. Motor Input	Sensible To Total Ratio (S/T) Dry Bulb			Total Cool Cap.	Comp. Motor Input	Sensible To Total Ratio (S/T) Dry Bulb			Total Cool Cap.	Comp. Motor Input	Sensible To Total Ratio (S/T) Dry Bulb			Total Cool Cap.	Comp. Motor Input	Sensible To Total Ratio (S/T) Dry Bulb		
	cfm	kBtuh	kW	75°F	80°F	85°F	kBtuh	kW	75°F	80°F	85°F	kBtuh	kW	75°F	80°F	85°F	kBtuh	kW	75°F	80°F	85°F
59°F	1450	55.5	3.47	.89	1.00	1.00	54.0	3.92	.91	1.00	1.00	51.5	4.43	.93	1.00	1.00	49.5	5.02	.95	1.00	1.00
	1800	60.0	3.49	.96	1.00	1.00	57.5	3.95	.98	1.00	1.00	55.0	4.46	1.00	1.00	1.00	53.0	5.06	1.00	1.00	1.00
	2100	62.5	3.50	1.00	1.00	1.00	60.0	3.96	1.00	1.00	1.00	58.0	4.48	1.00	1.00	1.00	55.0	5.08	1.00	1.00	1.00
63°F	1450	58.5	3.49	.74	.86	.98	56.5	3.94	.76	.88	1.00	54.0	4.44	.77	.90	1.00	51.0	5.03	.79	.93	1.00
	1800	61.5	3.50	.79	.93	1.00	58.5	3.95	.81	.95	1.00	56.0	4.47	.82	.98	1.00	53.5	5.06	.85	1.00	1.00
	2100	63.5	3.51	.83	.98	1.00	60.5	3.96	.85	1.00	1.00	57.5	4.48	.87	1.00	1.00	55.5	5.08	.90	1.00	1.00
67°F	1450	61.5	3.50	.60	.72	.83	59.5	3.96	.61	.73	.85	56.5	4.47	.62	.75	.87	53.5	5.06	.63	.77	.89
	1800	65.0	3.51	.64	.77	.90	61.5	3.97	.65	.79	.92	59.5	4.49	.66	.81	.95	56.0	5.09	.67	.83	.98
	2100	66.5	3.52	.67	.81	.96	64.0	3.98	.68	.83	.99	60.5	4.50	.69	.86	1.00	57.5	5.10	.71	.88	1.00
71°F	1450	65.0	3.51	.47	.59	.70	62.5	3.97	.48	.60	.71	59.5	4.49	.48	.61	.73	56.5	5.09	.49	.62	.75
	1800	67.5	3.52	.49	.63	.75	65.5	3.99	.50	.64	.77	62.0	4.51	.50	.65	.79	59.0	5.12	.52	.67	.81
	2100	69.5	3.53	.51	.66	.80	67.0	4.00	.52	.67	.82	63.5	4.52	.53	.69	.84	60.5	5.13	.54	.71	.86

BLOWER DATA

Model	Blower Tap		Air Volume (cfm) at Various External Static Pressures - in. w.g.					
			0.1	0.2	0.3	0.4	0.5	0.6
LRP13GNK24	Tap 1 (Fan Only)		640	590	545	495	445	385
	Tap 2 Cooling (Low Static)		820	785	750	715	675	635
	Tap 3 Cooling (High Static)		960	925	885	850	815	780
	Tap 4 Heating (Low Static)	CFM	925	890	865	830	795	765
		Rise (°F)	44	46	47	49	51	53
	Tap 5 Heating (High Static)	CFM	1005	970	940	910	880	855
		Rise (°F)	41	42	43	45	46	48
LRP13GNK30	Tap 1 (Fan Only)		670	625	580	535	490	440
	Tap 2 Cooling (Low Static)		1020	985	955	920	890	860
	Tap 3 Cooling (High Static)		1140	1105	1075	1045	1015	1000
	Tap 4 Heating (Low Static)	CFM	935	895	860	835	800	765
		Rise (°F)	44	45	47	49	51	53
	Tap 5 Heating (High Static)	CFM	1020	990	955	925	895	865
		Rise (°F)	40	41	43	44	46	47
LRP13GNK36	Tap 1 (Fan Only)		795	745	700	645	590	525
	Tap 2 Cooling (Low Static)		1250	1215	1180	1145	1115	1085
	Tap 3 Cooling (High Static)		1390	1355	1320	1285	1250	1205
	Tap 4 Heating (Low Static)	CFM	935	890	855	815	770	725
		Rise (°F)	44	46	48	50	53	56
	Tap 5 Heating (High Static)	CFM	1050	1010	970	935	895	860
		Rise (°F)	39	40	42	44	46	47
LRP13GNK42	Tap 1 (Fan Only)		775	700	615	535	470	390
	Tap 2 Cooling (Low Static)		1460	1420	1380	1340	1300	1255
	Tap 3 Cooling (High Static)		1600	1555	1510	1470	1430	1390
	Tap 4 Heating (Low Static)	CFM	1410	1370	1325	1285	1240	1200
		Rise (°F)	39	40	41	42	44	45
	Tap 5 Heating (High Static)	CFM	1535	1495	1555	1415	1375	1335
		Rise (°F)	35	36	37	38	39	41
LRP13GNK48	Tap 1 (Fan Only)		1065	1020	965	910	850	790
	Tap 2 Cooling (Low Static)		1665	1630	1595	1560	1530	1490
	Tap 3 Cooling (High Static)		1775	1735	1700	1660	1605	1555
	Tap 4 Heating (Low Static)	CFM	1405	1370	1325	1290	1245	1205
		Rise (°F)	39	40	41	42	44	45
	Tap 5 Heating (High Static)	CFM	1515	1480	1440	1405	1370	1325
		Rise (°F)	36	37	38	39	40	41
LRP13GNK60	Tap 1 (Fan Only)		1240	1190	1125	1060	995	940
	Tap 2 Cooling (Low Static)		1885	1840	1800	1755	1715	1675
	Tap 3 Cooling (High Static)		1965	1920	1875	1835	1785	1750
	Tap 4 Heating (Low Static)	CFM	1420	1365	1315	1265	1215	1155
		Rise (°F)	38	40	41	43	45	47
	Tap 5 Heating (High Static)	CFM	1570	1520	1470	1420	1370	1320
		Rise (°F)	35	36	37	38	40	41

NOTE - All air data is measured external to unit with dry coil and without filters.

BLOWER DATA

ACCESSORY AIR RESISTANCE DATA - in. w.g.

Air Volume cfm	Rectangular to Round Duct Adaptor Kits					
	Downflow		Horizontal			
	14 in. Diameter		14 in. Diameter		16 in. Diameter	18 in. Diameter
	24, 30, 36	42, 48, 60	24, 30, 36	42, 48, 60	42, 48, 60	42, 48, 60
500	0.03	- - -	0.04	- - -	- - -	- - -
600	0.05	- - -	0.07	- - -	- - -	- - -
700	0.08	0.13	0.08	0.13	- - -	- - -
800	0.10	0.17	0.12	0.16	- - -	- - -
900	0.12	0.21	0.15	0.21	- - -	- - -
1000	0.17	0.24	0.19	0.25	0.11	0.03
1100	0.18	0.30	0.23	0.30	0.11	0.03
1200	0.20	0.36	0.29	0.37	0.13	0.03
1300	0.26	0.43	0.31	0.43	0.17	0.03
1400	0.31	0.50	0.39	0.51	0.20	0.03
1500	- - -	0.57	- - -	0.57	0.21	0.05
1600	- - -	0.63	- - -	0.65	0.26	0.05
1700	- - -	0.71	- - -	0.72	0.30	0.06
1800	- - -	0.80	- - -	0.81	0.30	0.06
1900	- - -	0.91	- - -	0.90	0.40	0.06
2000	- - -	0.99	- - -	1.01	0.41	0.06

DIMENSIONS UNIT

Size	CORNER WEIGHTS								CENTER OF GRAVITY			
	AA		BB		CC		DD		EE		FF	
	lbs.	kg	lbs.	kg	lbs.	kg	lbs.	kg	in.	mm	in.	mm
24	95	43	98	44	97	44	116	53	23	584	22-3/4	579
30	96	44	101	46	99	45	118	54	23	584	22-3/4	579
36	103	47	103	47	105	48	119	54	23	584	22-3/4	579
42	129	59	129	59	143	65	142	64	27-1/2	699	22-3/4	579
48	133	60	130	59	143	65	143	65	27-1/2	699	22-3/4	579
60	137	62	135	61	147	67	147	67	27-1/2	699	22-3/4	579

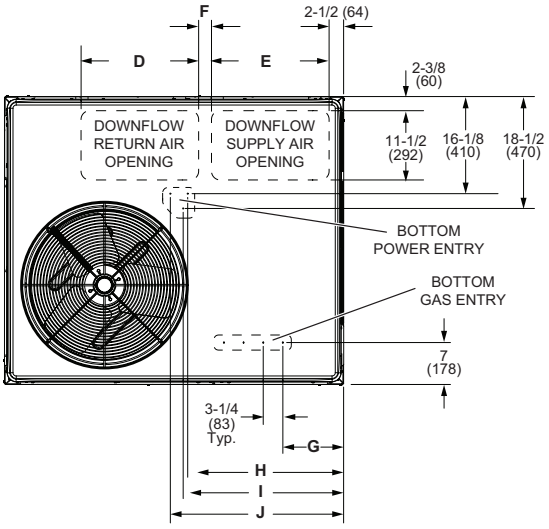

TOP VIEW (Base)

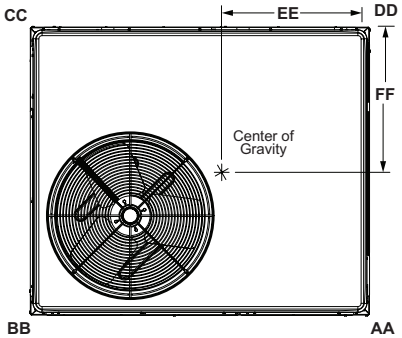

TOP VIEW
(Corner Weight and Center of Gravity)

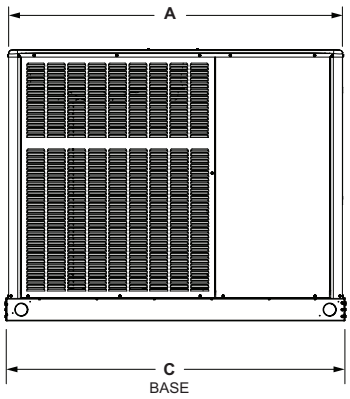

FRONT VIEW

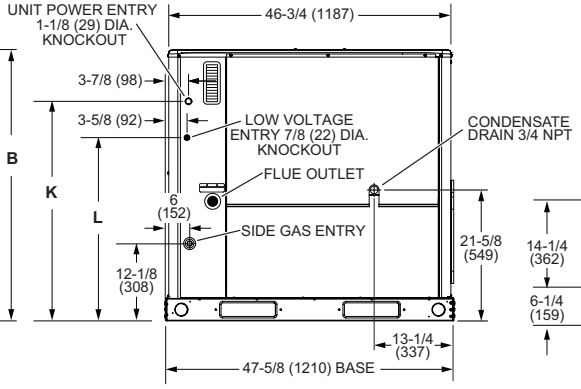

RIGHT SIDE VIEW

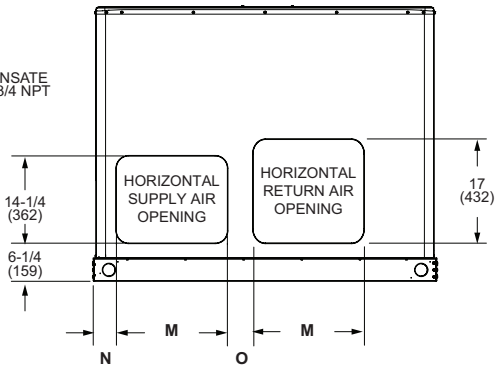

BACK VIEW

Size	A		B		C		D		E		F		G		H	
	in.	mm	in.	mm	in.	mm	in.	mm	in.	mm	in.	mm	in.	mm	in.	mm
24, 30, 36	47-5/8	1210	40-7/8	1038	47-5/8	1210	16-3/4	425	14	356	2	51	4-1/2	114	20-1/4	514
42, 48, 60	55-1/4	1403	44-7/8	1140	56-1/8	1426	19-1/2	495	19-1/2	495	2-1/8	54	10	254	25-7/8	657

Size	I		J		K		L		M		N		O	
	in.	mm	in.	mm	in.	mm	in.	mm	in.	mm	in.	mm	in.	mm
24, 30, 36	21	533	23-1/4	591	32-1/4	819	26-1/4	667	13-1/2	343	3-1/8	79	5-7/8	149
42, 48, 60	26-1/2	673	26-3/4	679	36-1/4	921	30-1/4	768	18-1/4	463	3-3/4	95	4-3/8	111

CLIP CURB

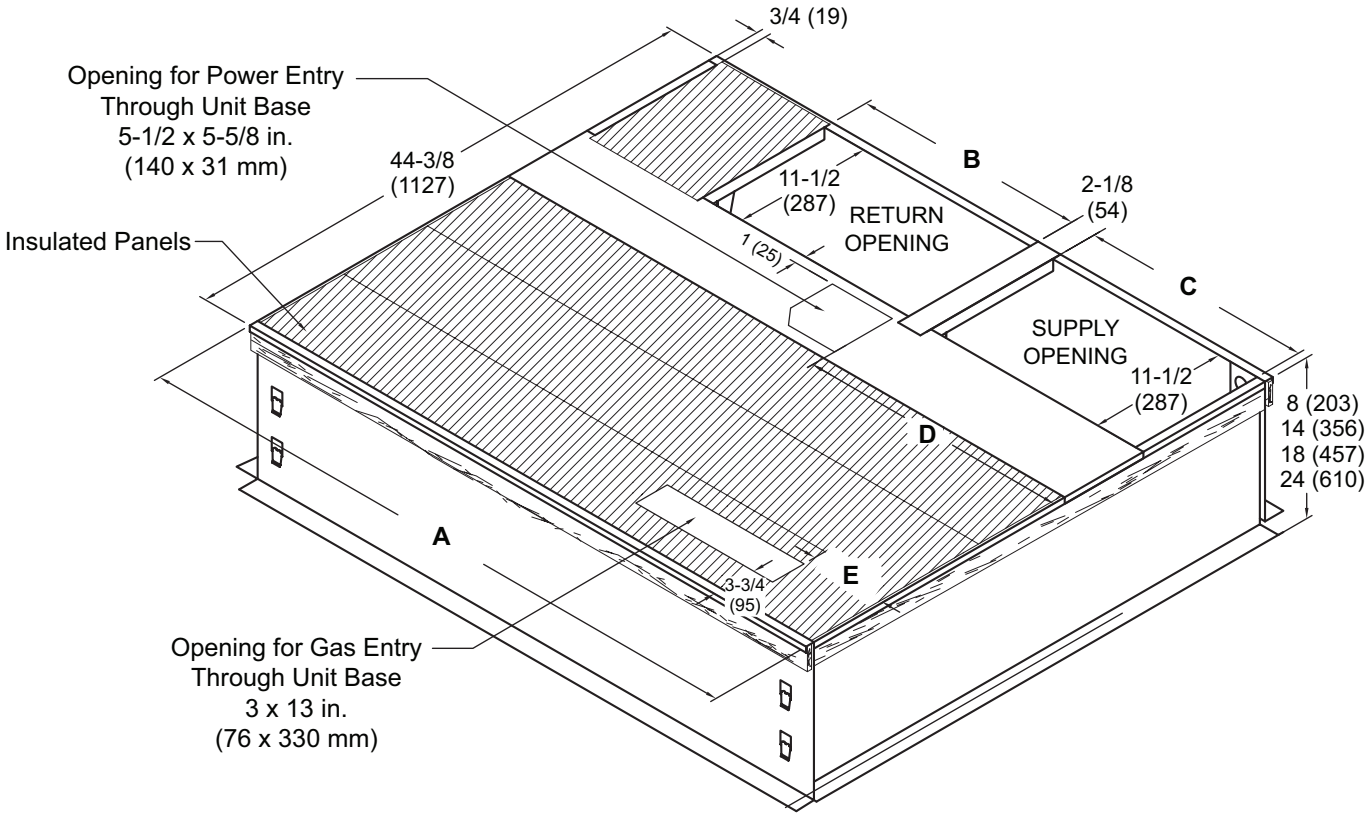

NOTE - Roof deck may be omitted within confines of curb.

TYPICAL FLASHING DETAIL FOR ROOF CURB

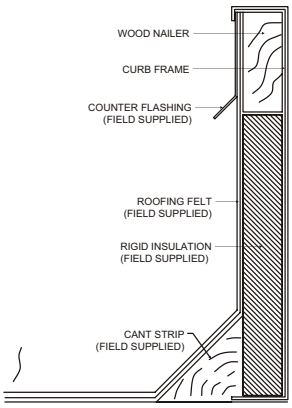

DETAIL ROOF CURB

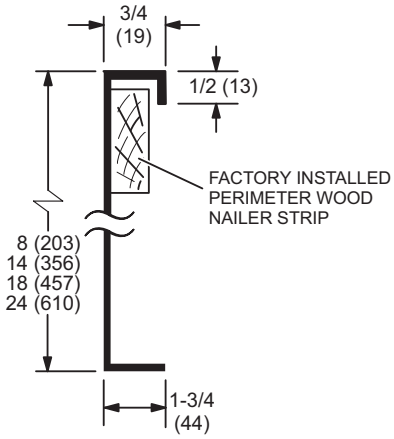

Usage	A		B		C		D		E	
	in.	mm	in.	mm	in.	mm	in.	mm	in.	mm
24, 30, 36	44-3/8	1127	16-7/8	429	13-7/8	352	17-1/4	438	1-1/4	32
42, 48, 60	52-7/8	1343	19-1/2	380	19-1/2	352	23-1/8	587	7	178

ADJUSTABLE PITCH ROOF WELDED CURB

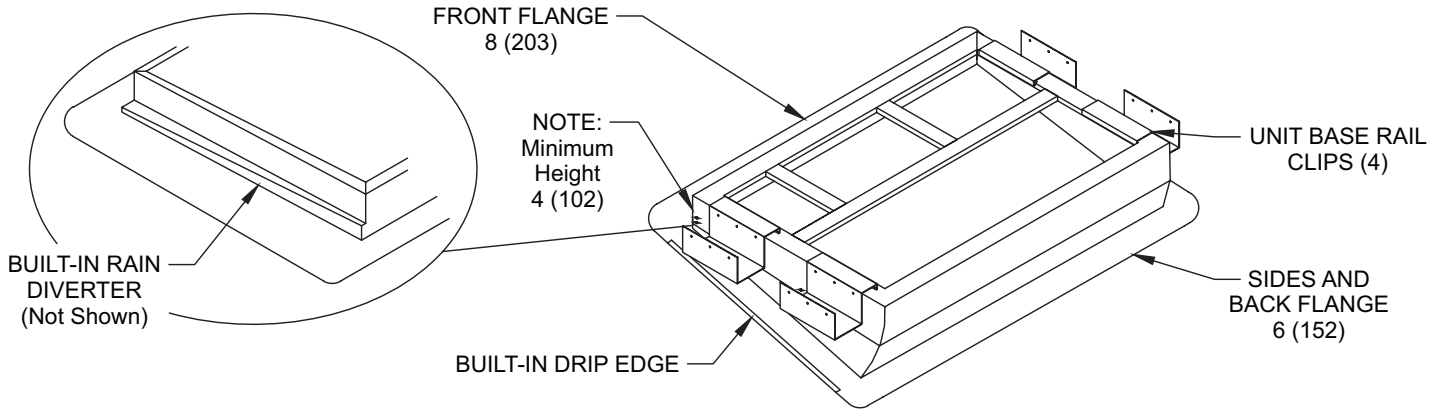

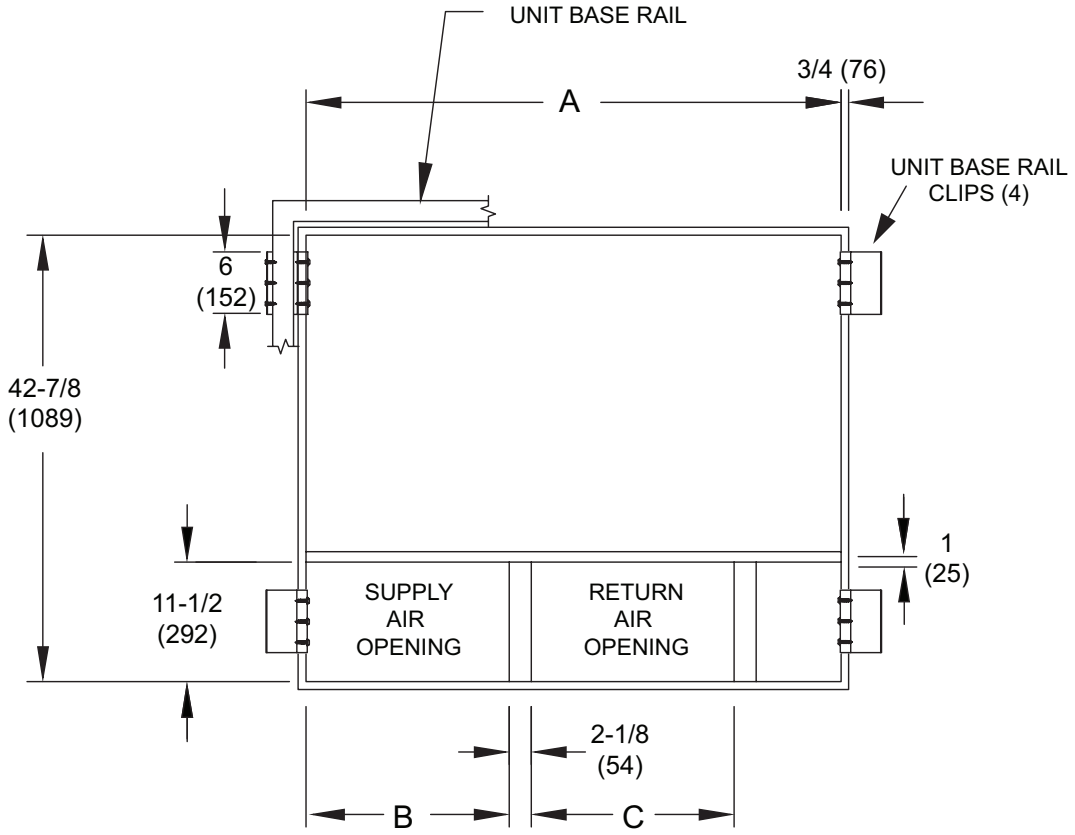

Usage	A		B		C	
	in.	mm	in.	mm	in.	mm
24, 30, 36	42-7/8	1089	13-7/8	352	16-7/8	429
42, 48, 60	51-3/8	1305	19-1/2	495	19-1/2	495

ADJUSTABLE PITCH ROOF CLIP CURB

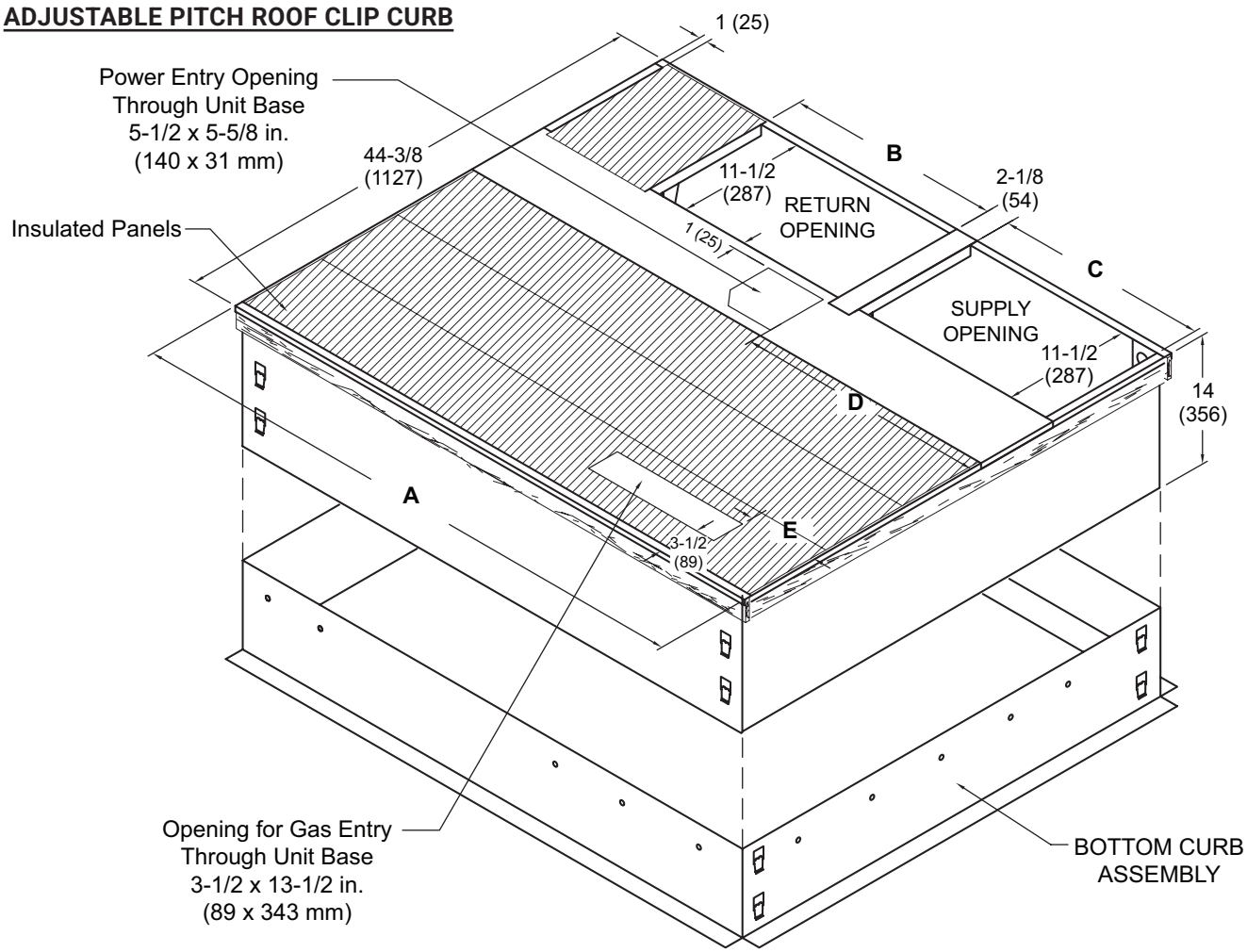

NOTE - Roof deck may be omitted within confines of curb.

TYPICAL FLASHING DETAIL FOR ROOF CURB

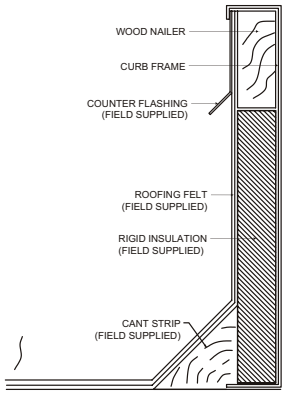

DETAIL ROOF CURB

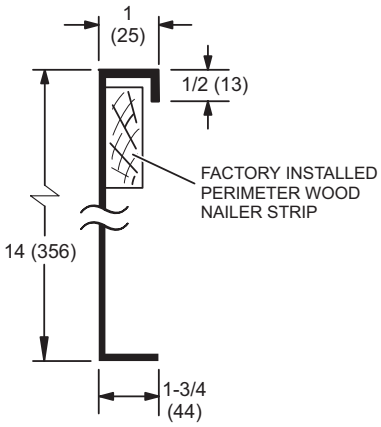

Usage	A		B		C		D		E	
	in.	mm	in.	mm	in.	mm	in.	mm	in.	mm
24, 30, 36	44-3/8	1127	16-7/8	429	13-7/8	352	17-1/4	438	1-1/4	32
42, 48, 60	52-7/8	1343	19-1/2	380	19-1/2	352	23-1/8	587	7	178

REVISIONS

Sections	Description of Change
Control Options	Updated to reflect latest product offering.
Dimensions	Updated dimension table.

Visit us at www.Lennox.com
For the latest technical information, www.LennoxPros.com
Contact us at 1-800-9-LENNOX

NOTE - Due to Lennox' ongoing commitment to quality, Specifications, Ratings and Dimensions subject to change without notice and without incurring liability.
Improper installation, adjustment, alteration, service or maintenance can cause property damage or personal injury.
Installation and service must be performed by a qualified installer and servicing agency.

©2026 Lennox Industries, Inc.