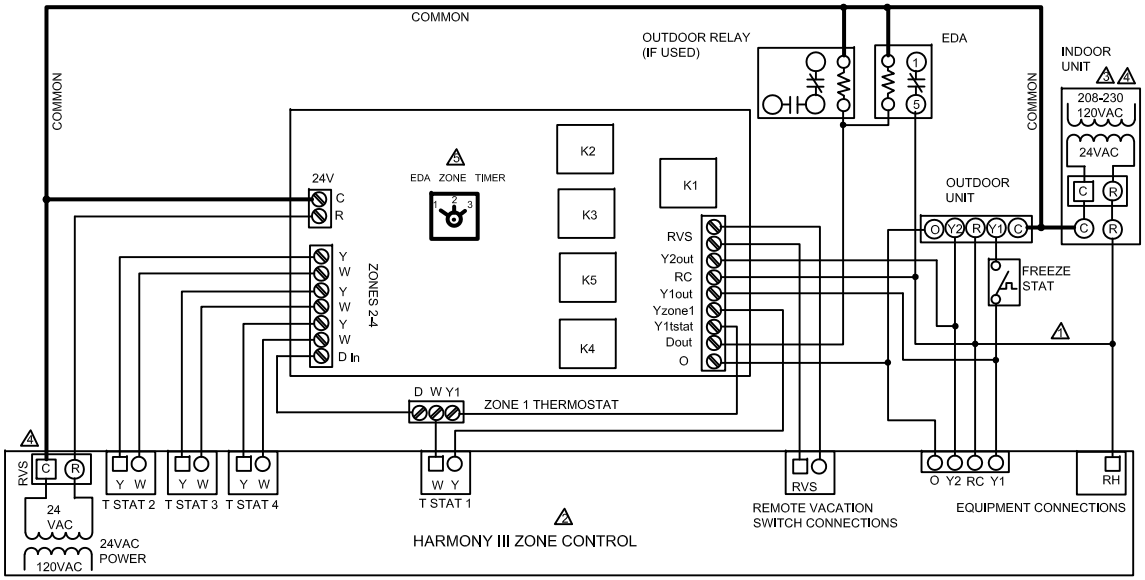

CONTROL PANEL TERMINAL DESIGNATIONS

R	24V(hot) THERMOSTAT VOLTAGE
C	24V(com) T-STAT(req'd) AND DAMPER VOLTAGE
W	HEAT (thermostats and equipment)
Y	COOLING (thermostats and equipment)
RH	HEATING TRANSFORMER-24V (hot)
RC	COOLING TRANSFORMER-24V (hot)
24VAC	VOLTAGE SOURCE FOR CONTROL PANEL, T-STATS AND DAMPERS

1. IF THE HEATING AND COOLING SYSTEM HAS A SINGLE TRANSFORMER,INSTALL A JUMPER BETWEEN RH AND RC.
2. FOR ALL OTHER ZONE CONTROL WIRING,SEE HARMONY III ZONE CONTROL SYSTEM MANUAL.
3. ALSO SEE INDOOR UNIT INSTALLATION INSTRUCTIONS FOR ADDITIONAL INSTALLATION DETAILS.
4. SEE DEHUMIDIFICATION INTERFACE KIT FOR TRANSFORMER PHASING AND COMMON WIRE CONNECTIONS.
5. SEE DEHUMIDIFICATION INTERFACE KIT FOR SWITCH SETTINGS.

EDA INTERFACE WIRING FOR HARMONY III ZONE CONTROL 0508	Supersedes
	New Form No. 535,851W

© 2008 Litho U.S.A.

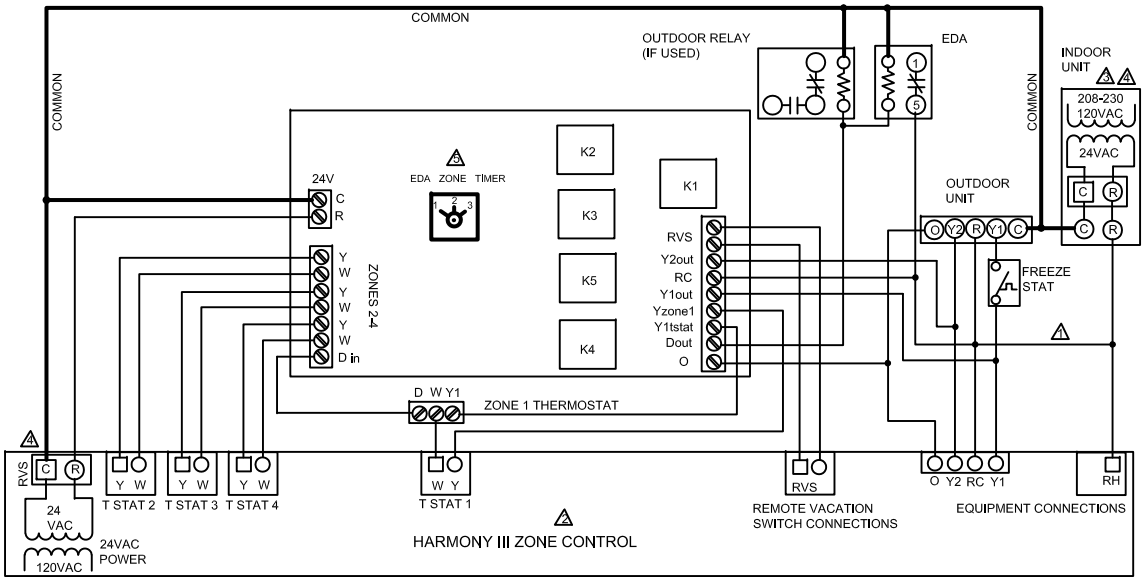

CONTROL PANEL TERMINAL DESIGNATIONS

R	24V(hot) THERMOSTAT VOLTAGE
C	24V(com) T-STAT(req'd) AND DAMPER VOLTAGE
W	HEAT (thermostats and equipment)
Y	COOLING (thermostats and equipment)
RH	HEATING TRANSFORMER-24V (hot)
RC	COOLING TRANSFORMER-24V (hot)
24VAC	VOLTAGE SOURCE FOR CONTROL PANEL, T-STATS AND DAMPERS

1. IF THE HEATING AND COOLING SYSTEM HAS A SINGLE TRANSFORMER,INSTALL A JUMPER BETWEEN RH AND RC.
2. FOR ALL OTHER ZONE CONTROL WIRING,SEE HARMONY III ZONE CONTROL SYSTEM MANUAL.
3. ALSO SEE INDOOR UNIT INSTALLATION INSTRUCTIONS FOR ADDITIONAL INSTALLATION DETAILS.
4. SEE DEHUMIDIFICATION INTERFACE KIT FOR TRANSFORMER PHASING AND COMMON WIRE CONNECTIONS.
5. SEE DEHUMIDIFICATION INTERFACE KIT FOR SWITCH SETTINGS.

EDA INTERFACE WIRING FOR HARMONY III ZONE CONTROL 0508	Supersedes
	New Form No. 535,851W

© 2008 Litho U.S.A.