© 2025 Lennox Industries Inc.
Dallas, Texas USA

INSTALLATION INSTRUCTIONS SLP99DFVK

DAVE LENNOX SIGNATURE®
COLLECTION GAS FURNACES
DOWNFLOW AIR DISCHARGE

508589-01
10/2025

THIS MANUAL MUST BE LEFT WITH THE HOMEOWNER FOR FUTURE REFERENCE

⚠ This is a safety alert symbol and should never be ignored. When you see this symbol on labels or in manuals, be alert to the potential for personal injury or death.

⚠ CAUTION

As with any mechanical equipment, contact with sharp sheet metal edges can result in personal injury. Take care while handling this equipment and wear gloves and protective clothing.

⚠ WARNING

This furnace is equipped with an ignition control factory enabled for use with Lennox A2L refrigerant systems. Disabling the refrigerant detection functionality on A2L system is prohibited by safety codes. Refer to furnace installation instructions for non-A2L and non-Lennox refrigerant system setup.

⚠ WARNING

Improper installation, adjustment, alteration, service or maintenance can cause property damage, personal injury or loss of life. Installation and service must be performed by a licensed professional HVAC installer or equivalent, service agency, or the gas supplier.

⚠ NOTICE

A thermostat is not included and must be ordered separately.

- A communicating thermostat must be used in communicating applications.
- In non-communicating applications, the Lennox ComfortSense® 7500 thermostat may be used, as well as other non-communicating thermostats.

In all cases, setup is critical to ensure proper system operation.

Field wiring for both communicating and non-communicating applications is illustrated in diagrams, which begin on page 35.

Contents

Unit Dimensions - inches (mm) 2
Parts Arrangement 3
SLP99DFVK Gas Furnace 4
Shipping and Packing List 4
Safety Information 4
Building Codes 4
Use of Furnace as Construction Heater 5
General 6
Installation - Setting Equipment 6
Filters 9
Duct System 9
Pipe & Fittings Specifications 11
Venting Options 13
Joint Cementing Procedure 14
Venting Pracitces 15
Gas Piping 30
Electrical 33
Ignition Control 41
Low GWP Application 50
Blower Data 53
Unit Start-Up 58
High Altitude Information 59
Gas Pressure Measurement 59
Proper Combustion 59
Heating Sequence of Operation 62
Service 64
Repair Parts 65
Configuring Unit Size Codes 66
Troubleshooting: Heating Sequence of Operation 67

1025
508589-01

Unit Dimensions - inches (mm)

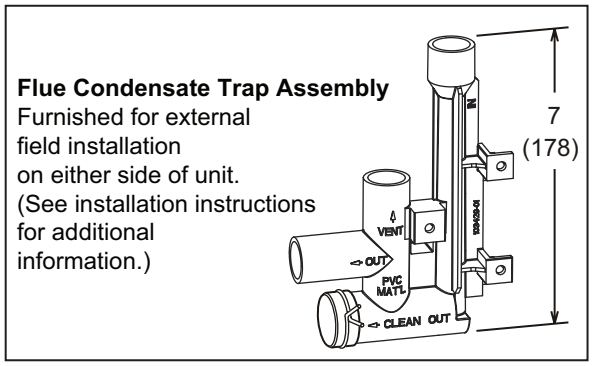

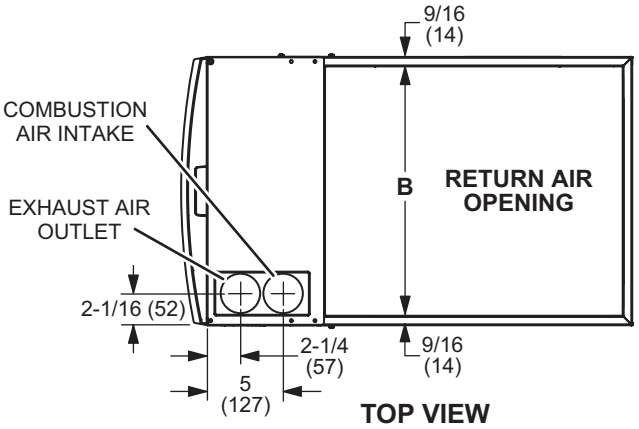

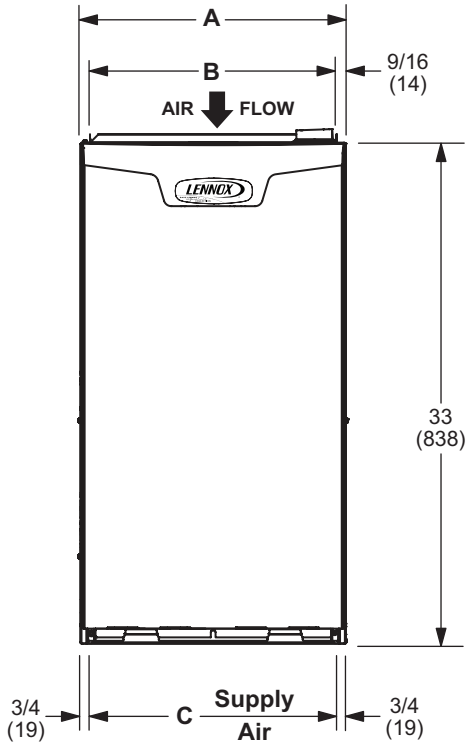

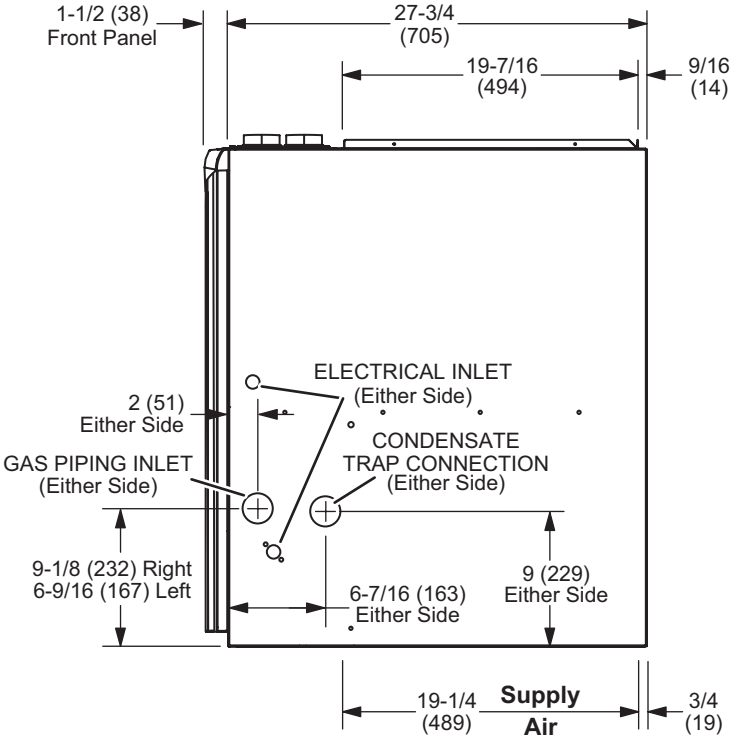

Model	A in - mm	B in - mm	C in - mm
SLP99DF070V36BK	17-1/2 - 446	16-3/8 - 416	16 - 406
SLP99DF090V36CK SLP99DF090V48CK SLP99DF090V60CK SLP99DF110V60CK	21 - 553	19-7/8 - 505	19-1/2 - 495

Parts Arrangement

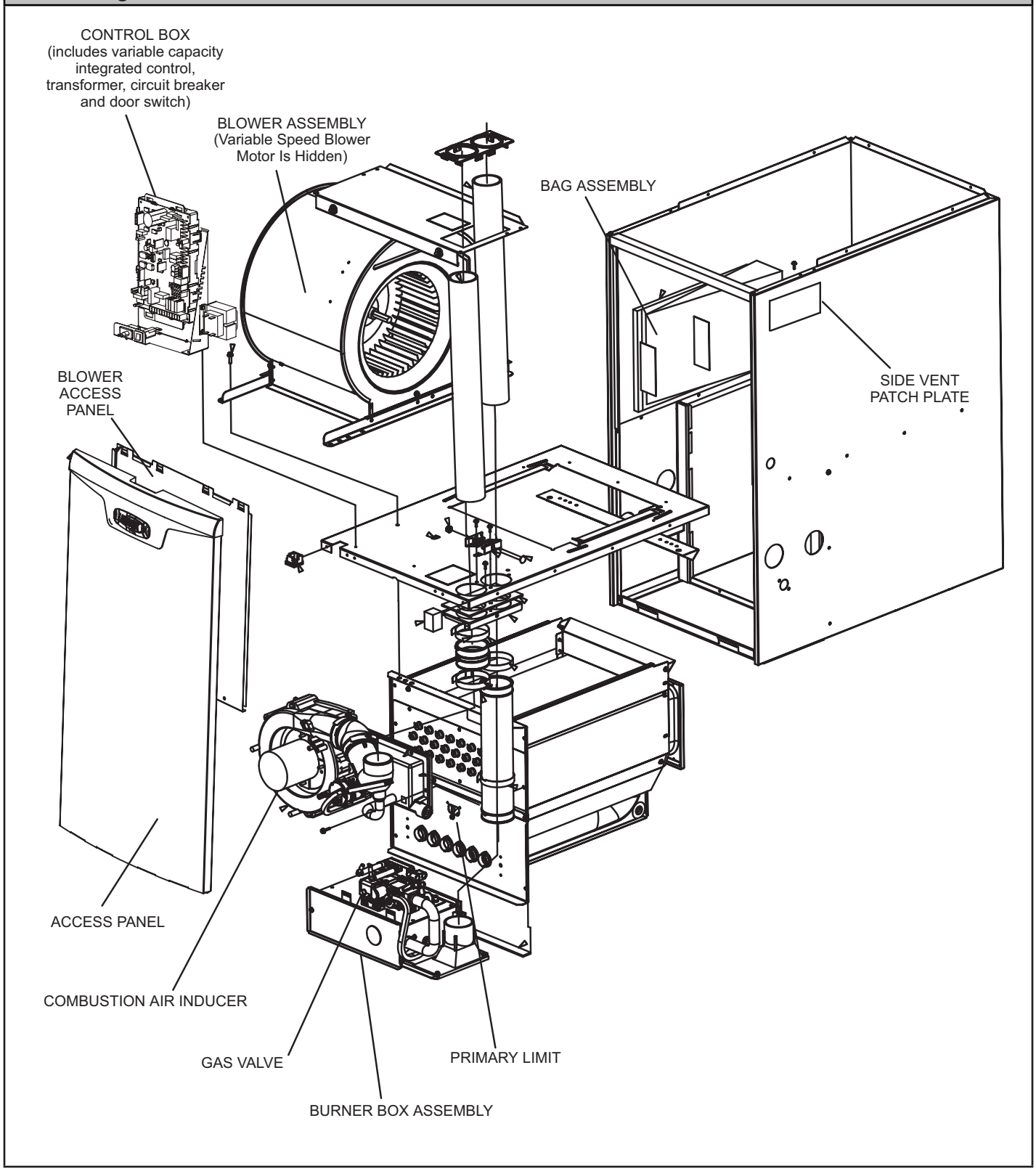

FIGURE 1

SLP99DFVK Gas Furnace

The SLP99DFVK category IV gas furnace is equipped with a variable-capacity, variable-speed integrated control.

This control ensures compatibility with the Lennox commincating thermostat and iHarmony® zone control system, as well as a thermostat which provides humidity control. The furnace is equipped for installation in natural gas applications only. A changeover kit may be ordered for LP applications.

The SLP99DFVK must be installed only as a Direct Vent gas central furnace.

NOTE - *In Direct Vent installations, combustion air is taken from outdoors and flue gases are discharged outdoors. See FIGURE 2 for applications including roof termination.*

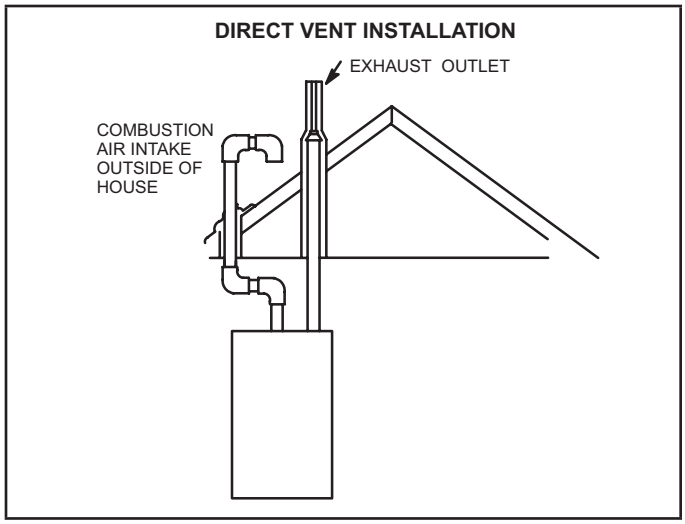

FIGURE 2

Shipping and Packing List

Package 1 of 1 contains

1 - Assembled SLP99DFVK unit

1 - Bag assembly containing the following:

- 1 - Snap bushing
- 1 - Snap plug
- 1 - Wire tie
- 1 - Condensate trap
- 1 - 3/4” Threaded street elbow
- 1 - Flue Coupling
- 2 - 2” Street elbows
- 2 - Side vent sealing plates
- 2 - Side vent sealing gaskets
- 6 - Sheet metal screws

1 - Bag containing discharge air sensor

Check equipment for shipping damage. If you find any damage, immediately contact the last carrier.

The following items may also be ordered separately:

- 1 - Thermostat
- 1 - Natural to LP gas conversion kit
- 1 - High altitude kit
- 1 -Sensor Kit (field installed)

Safety Information

⚠ WARNING

Improper installation, adjustment, alteration, service or maintenance can cause property damage, personal injury or loss of life. Installation and service must be performed by a licensed professional installer (or equivalent), service agency or the gas supplier.

⚠ CAUTION

As with any mechanical equipment, contact with sharp sheet metal edges can result in personal injury. Take care while handling this equipment and wear gloves and protective clothing.

Use only the type of gas approved for use with this furnace. Refer to unit nameplate.

Building Codes

In the USA, installation of gas furnaces must conform with local building codes. In the absence of local codes, units must be installed according to the current National Fuel Gas Code (ANSI-Z223.1/NFPA 54). The National Fuel Gas Code is available from the following address:

American National Standards Institute, Inc.
11 West 42nd Street
New York, NY 10036

Installation Locations and Clearances

In Canada, installation must conform with current National Standard of Canada CSA-B149 Natural Gas and Propane Installation Codes, local plumbing or waste water codes and other applicable local codes.

This furnace is designed for installation clearances to combustible material as listed on the unit nameplate and the table in FIGURE 7. Accessibility and service clearances must take precedence over fire protection clearances.

For installation in a residential garage, the furnace must be installed so that the burner(s) and the ignition source are located no less than 18 inches (457 mm) above the floor. The furnace must be located or protected to avoid physical damage by vehicles. When a furnace is installed in a public garage, hangar, or other building that has a hazardous atmosphere, the furnace must be installed according to recommended good practice requirements and current National Fuel Gas Code or CSA B149 standard.

NOTE - *Furnace must be adjusted to obtain a temperature rise (100% percent capacity) within the range(s) specified on the unit nameplate. Failure to do so may cause erratic limit operation and may also result in premature heat exchanger failure. See Duct System section on page 9 for installing the optional discharge air sensor used to measure temperature rise. The sensor is shipped with the unit.*

This SLP99DFVK furnace must be installed so that its electrical components are protected from water.

Installed in Combination with a Cooling Coil

When this furnace is used with cooling units, it shall be installed in parallel with, or on the upstream side of, cooling units to avoid condensation in the heating compartment. With a parallel flow arrangement, a damper (or other means to control the flow of air) must adequately prevent chilled air from entering the furnace (FIGURE 3). If the damper is manually operated, it must be equipped to prevent operation of either the heating or the cooling unit, unless it is in the full **HEAT** or **COOL** setting.

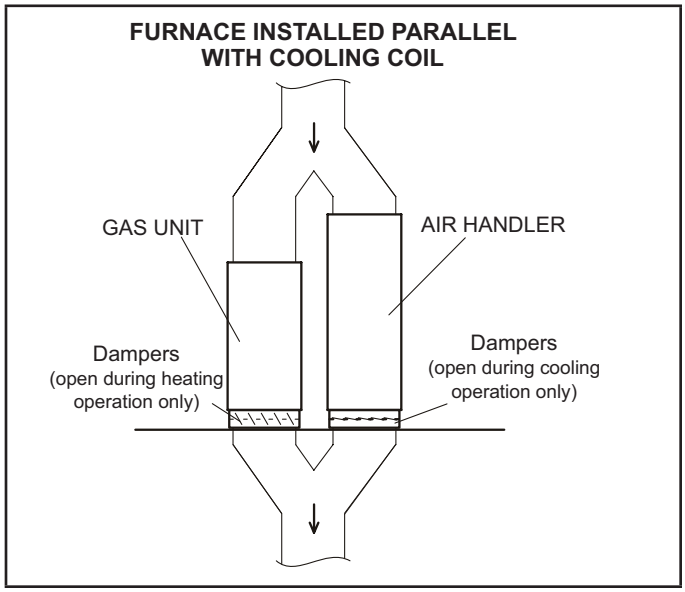

FIGURE 3

When installed, this furnace must be electrically grounded according to local codes. In addition, in the United States, installation must conform with the current National Electric Code, ANSI/NFPA No. 70. The National Electric Code (ANSI/NFPA No. 70) is available from the following address:

National Fire Protection Association

1 Battery March Park

Quincy, MA 02269

NOTE - *This furnace is designed for a minimum continuous return air temperature of 60°F (16°C) or an intermittent operation down to 55°F (13°C) dry bulb for cases where a night setback thermostat is used. Return air temperature must not exceed 85°F (29°C) dry bulb. See "Duct System" on page 9 for installing the optional discharge air sensor used to measure temperature rise. Sensor is shipped with the unit.*

In Canada, all electrical wiring and grounding for the unit must be installed according to the current regulations of the Canadian Electrical Code Part I (CSA Standard C22.1) and/or local codes.

⚠ CAUTION

Do not set thermostat below 60F (16C) in heating mode. Setting below 60F (16C) reduces the number of heating cycles. Damage to the unit may occur that is not covered by the warranty.

The SLP99DFVK furnace may be installed in alcoves, closets, attics, basements, garages, and utility rooms.

This furnace design has not been CSA International certified for installation in mobile homes, recreational vehicles, or outdoors.

Never use an open flame to test for gas leaks. Check all connections using a commercially available soap solution made specifically for leak detection.

Use of Furnace as Construction Heater

Units may be used for heating of buildings or structures under construction, if the following conditions are met to ensure proper operation:

DO NOT USE THE UNIT FOR CONSTRUCTION HEAT UNLESS ALL OF THE FOLLOWING CRITERIA ARE MET:

- Furnace must be in its final location. The vent system must be permanently installed per these installation instructions.
- Furnace must be installed as a two pipe system and one hundred percent (100%) outdoor air must be provided for combustion air requirements during construction.
- A room thermostat must control the furnace. The use of fixed jumpers that will provide continuous heating is prohibited.
- The input rate and temperature rise must be set per the furnace rating plate.
- Supply and Return air ducts must be provided and sealed to the furnace. Return air must be terminated outside of the space where furnace is installed.
- Return air temperature range between 60°F (16°C) and 80°F (27°C) must be maintained.
- MERV 11 or greater air filters must be installed in the system and must be regularly inspected and maintained (e.g., regular static checks and replaced at end of life) during construction.
- Blower and vestibule access panels must be in place on the furnace at all times.
- The furnace heat exchanger, components, duct system, and evaporator coils must be thoroughly cleaned following final construction clean−up.
- Air filters must be replaced upon construction completion.
- All furnace operating conditions (including ignition, input rate, temperature rise and venting) must be verified in accordance with these installation instructions.
- The refrigerant leak detection sensor must be inspected for dust/debris deposits. Please refer to the evaporator coil and/or refrigerant detection sensor kit instructions for additional information.

EQUIPMENT MAY EXPERIENCE PREMATURE COMPONENT FAILURE AS A RESULT OF FAILURE TO FOLLOW THE ABOVE INSTALLATION INSTRUCTIONS. FAILURE TO FOLLOW THE ABOVE INSTALLATION INSTRUCTIONS VOIDS THE MANUFACTURER'S EQUIPMENT LIMITED WARRANTY. LENNOX DISCLAIMS ALL LIABILITY IN CONNECTION WITH INSTALLER'S

FAILURE TO FOLLOW THE ABOVE INSTALLATION INSTRUCTIONS.NOTWITHSTANDING THE FOREGOING, INSTALLER IS RESPONSIBLE FOR CONFIRMING THAT THE USE OF CONSTRUCTION HEAT IS CONSISTENT WITH THE POLICIES AND CODES OF ALL REGULATING ENTITIES. ALL SUCH POLICIES AND CODES MUST BE ADHERED TO.

General

⚠ CAUTION

SLP99DFVK unit should not be installed in areas normally subject to freezing temperatures.

These instructions are intended as a general guide and do not supersede local codes in any way. Consult authorities having jurisdiction before installation.

In addition to the requirements outlined previously, the following general recommendations must be considered when installing a SLP99DFVK furnace:

- Place the furnace as close to the center of the air distribution system as possible. The furnace should also be located close to the chimney or vent termination point.
- When the furnace is installed in an attic or other insulated space, keep insulation away from the furnace.
- When the furnace is installed in an unconditioned space, consider provisions required to prevent freezing of condensate drain system.

Installation - Setting Equipment

⚠ WARNING

Do not install the furnace on its front, back or in the horizontal position. See FIGURE 5. Do not connect the return air ducts to the back of the furnace. Doing so will adversely affect the operation of the safety control devices, which could result in personal injury or death.

Select a location that allows for the required clearances that are listed on the unit nameplate. Also consider gas supply connections, electrical supply, vent connection, condensate trap and drain connections, and installation and service clearances [24 inches (610 mm) at unit front]. ***The unit must be level from side to side. Unit must be positioned with a slight slope up to 1/2" toward the front to aid in draining. See FIGURE 4.***

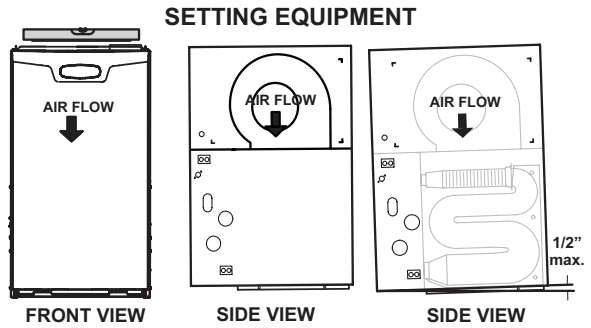

Unit must be level side-to-side. Unit must be positioned with a slight slope up to 1/2" toward the front to aid in draining.

FIGURE 4

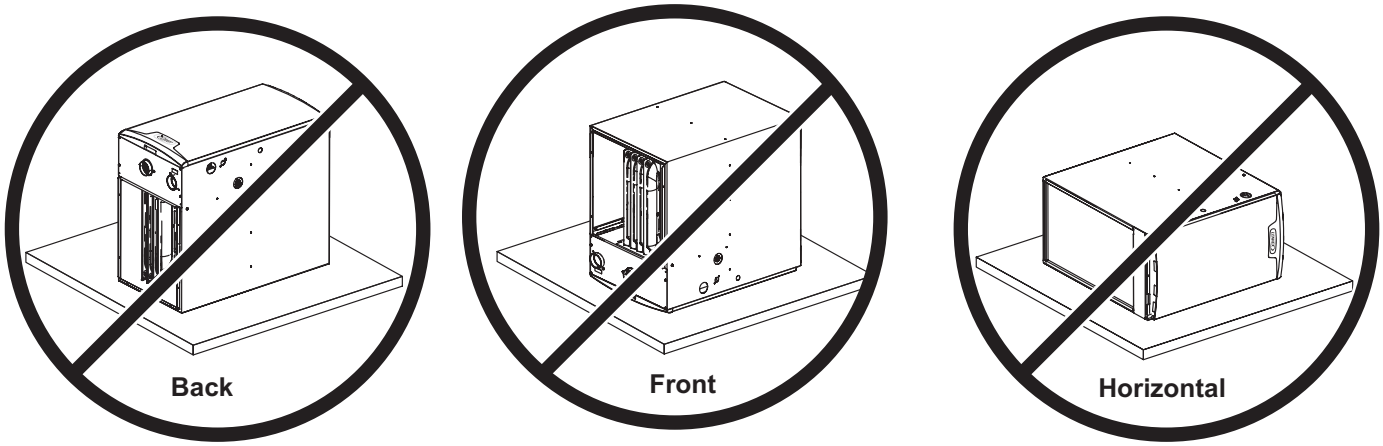

NOTE - Do not install the furnace on its front, back or in the horizontal position

FIGURE 5

NOTE - *The 1/2 hp blower motor used in the SLP99D-F070V36B and SLP99DF090V36C unit is equipped with three flexible legs and one rigid leg. The rigid leg is equipped with a shipping bolt and a flat white plastic washer (rather than the rubber mounting grommet used with a flexible mounting leg).* ***The bolt and washer must be removed before the furnace is placed into operation.*** *After the bolt and washer have been removed, the rigid leg will not touch the blower housing.*

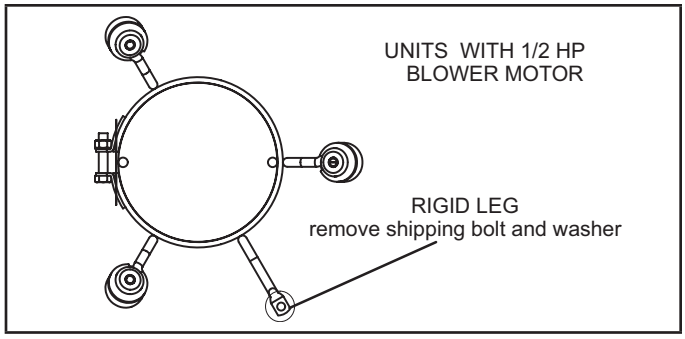

FIGURE 6

Allow for clearances to combustible materials as indicated on the unit nameplate. Minimum clearances for closet or alcove installations are shown in FIGURE 7.

⚠ WARNING

The blower access panel must be securely in place when the blower and burners are operating. Gas fumes, which could contain carbon monoxide, can be drawn into living space resulting in personal injury or death.

⚠ WARNING

Improper installation of the furnace can result in personal injury or death. Combustion and flue products must never be allowed to enter the return air system or air in the living space. Use sheet metal screws and joint tape to seal return air system to furnace.

In platform installations with furnace return, the furnace should be sealed airtight to the return air plenum. A door must never be used as a portion of the return air duct system. The base must provide a stable support and an airtight seal to the furnace. Allow absolutely no sagging, cracks, gaps, etc. For no reason should return and supply air duct systems ever be connected to or from other heating devices such as a fireplace or stove, etc. Fire, explosion, carbon monoxide poisoning, personal injury and/or property damage could result.

IThe unit may be installed three ways in downflow applications: on non-combustible flooring, on combustible flooring using a base, or on a reverse-flow cooling coil cabinet. **Do not drag the unit across the floor in the downflow position. Floor and flange damage will result. Refer to FIGURE 7 for clearances in downflow applications.**

Downflow Application Installation Clearances

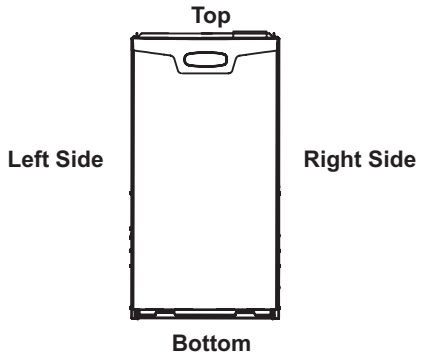

Top	0
*Front	0
Back	0
Sides	0†
Vent	0
Floor	NC‡

*Front clearance in alcove installation must be 24 in. (610 mm). Maintain a minimum of 24 in. (610 mm) for front service access.
†Allow proper clearances to accommodate condensate trap and vent pipe installation.
‡The furnace may be installed on a combustible wood floor if an optional base is installed between the furnace and the combustible floor.

FIGURE 7

Installation on Non-Combustible Flooring (FIGURE 8)

1 - Cut floor opening keeping in mind clearances listed on unit rating plate. Also keep in mind gas supply connections, electrical supply, flue and air intake connections and sufficient installation and servicing clearances. See TABLE 1 for correct floor opening size.

2 - Flange warm air plenum and lower the plenum into the opening.

3 - Set the unit over the plenum and seal the plenum to the unit.

Ensure that the seal is adequate.

TABLE 1
NON-COMBUSTIBLE FLOOR OPENINGSIZE

Cabinet Width	Front to Rear		Side to Side	
	in	mm	in	mm
B Cabinet 17 - 1/2”	19 - 3/4	502	16 - 5/8	422
C Cabinet 21”	19 - 3/4	502	20 - 1/8	511

NOTE - Floor opening dimensions listed are 1/4 inch (6 mm) larger than the unit opening. See dimension drawing on page 2.

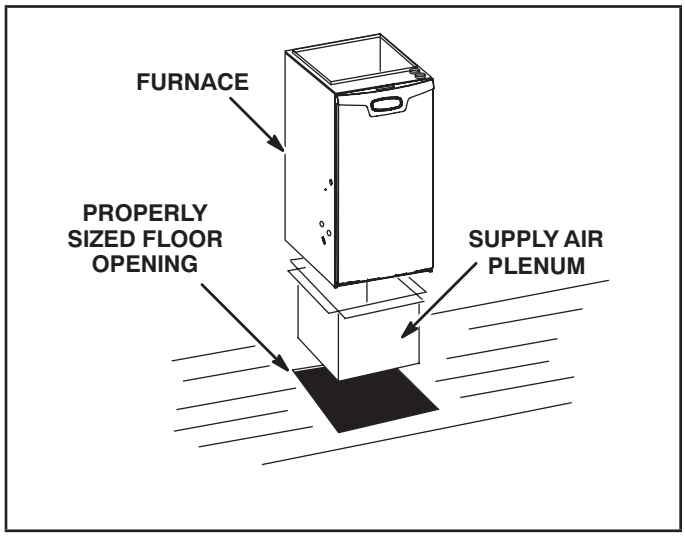

FIGURE 8

Installation on Combustible Flooring (FIGURE 9)

1 - When unit is installed on a combustible floor, a downflow combustible flooring base must be installed between the furnace and the floor. The base must be ordered separately. See TABLE 2 for opening size to cut in floor.

⚠ CAUTION

The furnace and combustible flooring base shall not be installed directly on carpeting, tile, or other combustible material other than wood flooring.

TABLE 2
COMBUSTIBLE FLOORING BASE OPENING SIZE

Cabinet Width	Catalog Number	Front to Rear		Side to Side	
		in	mm	in	mm
B Cabinet 17 - 1/2”	11M60	22	559	18 - 3/4	476
C Cabinet 21”	11M61	22	559	22 - 3/4	578

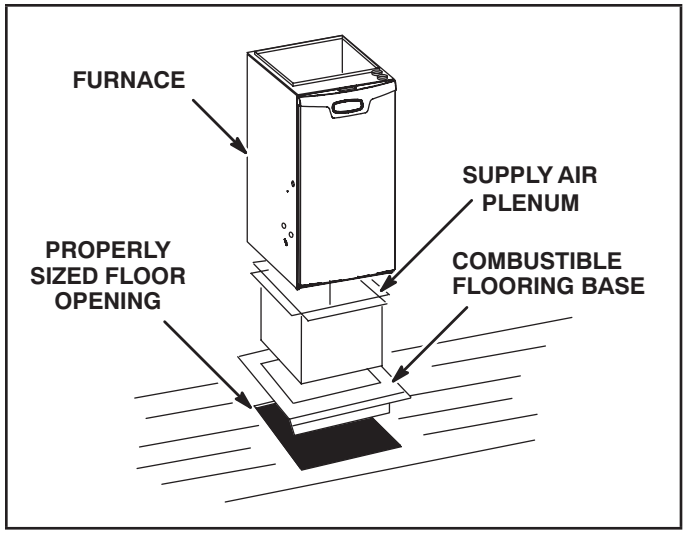

FIGURE 9

2 - After opening is cut, set combustible flooring base into opening.

3 - Check fiberglass strips on combustible flooring base to make sure they are properly glued and positioned.

4 - Lower supply air plenum into combustible flooring base until plenum flanges seal against fiberglass strips.

NOTE - *Be careful not to damage fiberglass strips. Check for a tight seal.*

5 - Set the furnace over the plenum.

6 - Ensure that the seal between the furnace and plenum is adequate.

Installation on Cooling Coil Cabinet (FIGURE 10)

NOTE - *Downflow combustible flooring base is not used.*

1 - Refer to reverse-flow coil installation instructions for correctly sized opening in floor and installation of cabinet.

2 - When cooling cabinet is in place, set and secure the furnace according to the instructions that are provided with the cooling coil. Secure the furnace to the cabinet.

3 - Seal the cabinet and check for air leaks.

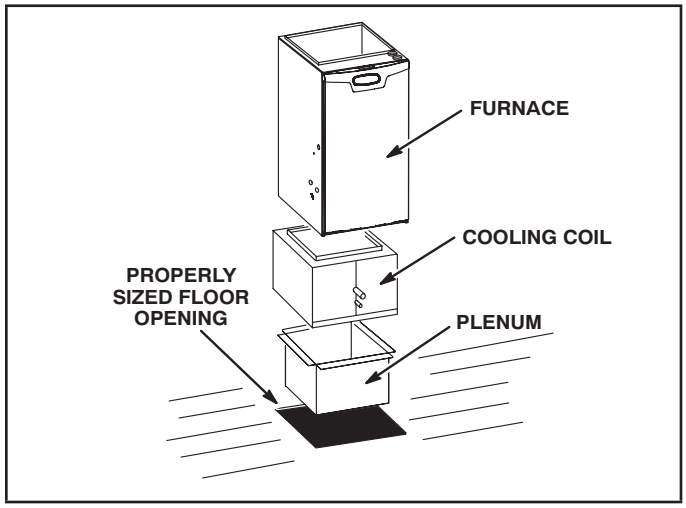

FIGURE 10

Return Air Opening -- Downflow Units

Return air may be brought in only through the top opening of a furnace installed in the downflow position. The following steps should be taken when installing plenum:

1 - Bottom edge of plenum should be flanged with a hemmed edge (See FIGURE 11 or FIGURE 12).

2 - Sealing strips should be used to ensure an airtight seal between the cabinet and the plenum.

3 - In all cases, plenum should be secured to top of furnace using sheet metal screws.

4 - Make certain that an adequate seal is made.

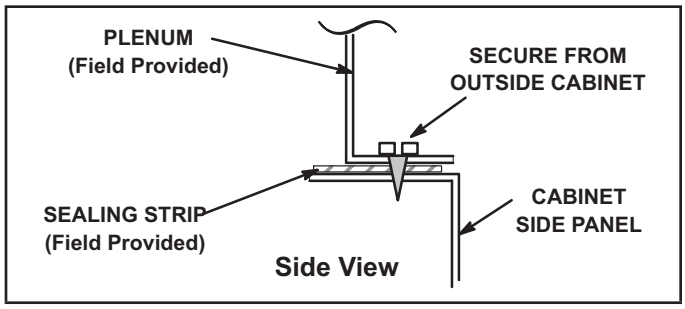

FIGURE 11

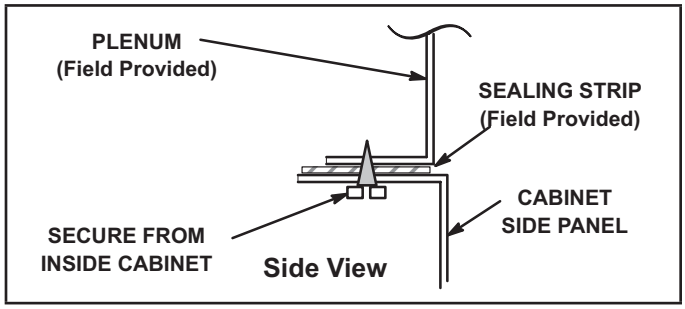

FIGURE 12

Filters

This unit is not equipped with a filter or rack. A field-provided filter is required for the unit to operate properly. TABLE 3 lists recommended filter size.

A filter must be in place whenever the unit is operating.

⚠ IMPORTANT

If a highefficiency filter is being installed as part of this system to ensure better indoor air quality, the filter must be properly sized. Highefficiency filters have a higher static pressure drop than standardefficiency glass/foam filters. If the pressure drop is too great, system capacity and performance may be reduced. The pressure drop may also cause the limit to trip more frequently during the winter and the indoor coil to freeze in the summer, resulting in an increase in the number of service calls.

Before using any filter with this system, check the specifications provided by the filter manufacturer against the data given in the appropriate Lennox Product Specifications bulletin. Additional information is provided in Service and Application Note ACC002 (August 2000).

TABLE 3

Furnace Cabinet Width	Fillter Size
B Cabinet 17-1/2”	16 X 25 X 1 (1)
C Cabinet 21-1/2”	

Duct System

Use industry-approved standards to size and install the supply and return air duct system. This will result in a quiet and low-static system that has uniform air distribution. See FIGURE 13 below for proper duct installation.

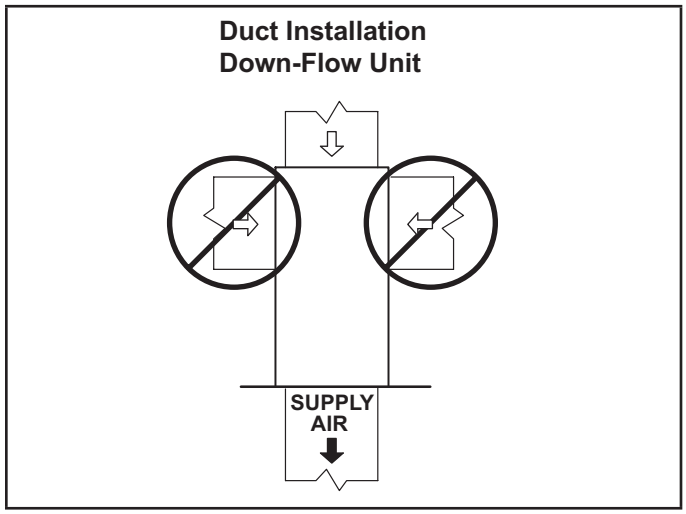

FIGURE 13

Discharge Air Temperature Sensor

This furnace is shipped with a discharge air temperature sensor that can be installed in the furnace plenum. The sensor is used to measure temperature rise in the heating mode and temperature drop in the cooling mode. See TABLE 4 and FIGURE 14. Drill a 3/8 inch diameter hole in the plenum based on the specified location. Center the discharge air temperature sensor in the middle of the hole and use two field provided screws to secure in place. Field supplied wiring must be used to connect the sensor to the discharge air temperature sensor terminals on the integrated control board. See FIGURE 14.

NOTE - I*f unable to mount at specified location, sensor can be mounted in the coil cabinet 1” from the bottom and 5” from the right side. Care must be exercised to avoid hitting the coil/drainpan while drilling through the cabinet*.

A communicating thermostat can be used to run temperature rise and temperature drop tests and viewed in the installation reports. See FIGURE 47 on page 36 for thermostat wiring. If a communicating thermostat is not being used, then the discharge air temperature can be viewed on the seven segment LED on the integrated control shown in FIGURE 14.

For zoning applications the discharge air sensor must be installed and wired to the zoning control board. Wiring to the furnace control board is not required.

TABLE 4

Discharge Air Temperature Sensor Location Downflow

SLP99DF Model	"a"	"b"	[1]Mounting Surface
070XV36BK	6"	Center	Plenum Duct
090XV36CK			
090XV48CK			
090XV60CK			
110XV60CK			

Discharge Air Sensor Location and Wiring

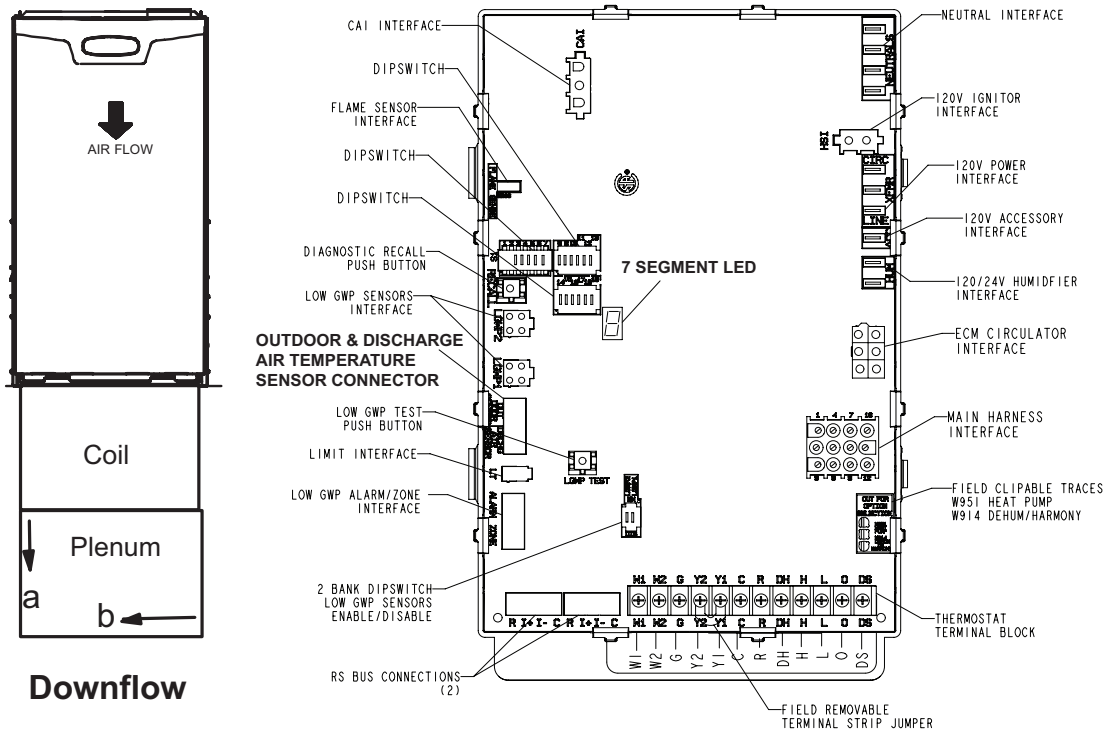

FIGURE 14

NOTE - *Operation of this furnace in heating mode (indoor blower operating at selected heating speed) with an external static pressure which exceeds 0.8 inches w.c. may result in erratic limit operation.*

Return Air Plenum

Return air must not be drawn from a room where this furnace, or any other gas-fueled appliance (i.e., water heater), or carbon monoxide-producing device (i.e., wood fireplace) is installed. When return air is drawn from a room, a negative pressure is created in the room. If a gas appliance is operating in a room with negative pressure, the flue products can be pulled back down the vent pipe and into the room. This reverse flow of the flue gas may result in incomplete combustion and the formation of carbon monoxide gas. This toxic gas might then be distributed throughout the house by the furnace duct system. Use fiberglass sealing strips, caulking, or equivalent sealing method between the plenum and the furnace cabinet to ensure a tight seal. If a filter is installed, size the return air duct to fit the filter frame.

Pipe & Fittings Specifications

All pipe, fittings, primer and solvent cement must conform with American National Standard Institute and the American Society for Testing and Materials (ANSI/ASTM) standards. The solvent shall be free-flowing and contain no lumps, undissolved particles or any foreign matter that adversely affects the joint strength or chemical resistance of the cement. The cement shall show no gelation, stratification, or separation that cannot be removed by stirring. Refer to TABLE 5 for approved piping and fitting materials.

⚠ CAUTION

Solvent cements for plastic pipe are flammable liquids and should be kept away from all sources of ignition. Do not use excessive amounts of solvent cement when making joints. Good ventilation should be maintained to reduce fire hazard and to minimize breathing of solvent vapors. Avoid contact of cement with skin and eyes.

⚠ IMPORTANT

SLP99DFVK exhaust and intake connections are made of PVC. Use PVC primer and solvent cement when using PVC vent pipe. When using ABS vent pipe, use transitional solvent cement to make connections to the PVC fittings in the unit.

Use PVC primer and solvent cement or ABS solvent cement meeting ASTM specifications, refer to TABLE 5. As an alternate, use all purpose cement, to bond ABS, PVC, or CPVC pipe when using fittings and pipe made of the same materials. Use transition solvent cement when bonding ABS to either PVC or CPVC.

Low temperature solvent cement is recommended. Metal or plastic strapping may be used for vent pipe hangers. Uniformly apply a liberal coat of PVC primer for PVC.

TABLE 5

PIPING AND FITTINGS SPECIFICATIONS

Schedule 40 PVC (Pipe)	D1785
Schedule 40 PVC (Fittings)	D2466
Schedule 40 CPVC (Pipe)	F441
Schedule 40 CPVC (Fittings)	F438
SDR-21 PVC or SDR-26 PVC (Pipe)	D2241
SDR-21 CPVC or SDR-26 CPVC (Pipe)	F442
Schedule 40 ABS (Pipe)	D1527
Schedule 40 ABS (Fittings)	D2468
ABS-DWV (Drain Waste & Vent) (Pipe & Fittings)	D2661
PVC-DWV (Drain Waste & Vent) Pipe & Fittings)	D2665
PRIMER & SOLVENT CEMENT	**ASTM SPECIFICATION**
PVC & CPVC Primer	F656
PVC Solvent Cement	D2564
CPVC Solvent Cement	F493
ABS Solvent Cement	D2235
PVC/CPVC/ABS All Purpose Cement For Fittings & Pipe of the same material	D2564, D2235, F493
ABS to PVC or CPVC Transition Solvent Cement	D3138
CANADA PIPE & FITTING & SOLVENT CEMENT	**MARKING**
PVC & CPVC Pipe and Fittings	ULCS636
PVC & CPVC Solvent Cement	
ABS to PVC or CPVC Transition Cement	
POLYPROPYLENE VENTING SYSTEM	
PolyPro® by Duravent	
InnoFlue® by Centrotherm	
ECCO Polypropylene Vent™	
UL 1738 CERTIFIED GAS VENTING SYSTEM	
IPEX System1738 Schedule 40 PVC Pipes and Fittings	UL1738
IPEX System1738 PVC FGV Cement &Primer	

Canadian Applications Only - Pipe, fittings, primer and solvent cement used to vent (exhaust) this appliance must be certified to ULC S636 and supplied by a single manufacturer as part of an approved vent (exhaust) system. In addition, the first three feet of vent pipe from the furnace flue collar must be accessible for inspection.

TABLE 6 lists the available exhaust termination kits.

TABLE 6

OUTDOOR TERMINATION USAGE*

Input Size	Vent Pipe Dia. in.	STANDARD				CONCENTRIC		
		Flush Mount Kit	Wall Kit		Field Fabricated	1-1.2 inch	2 inch	3 inch
			2 inch	3 inch				
		51W11 (US) 51W12 (CA)	22G44 (US) [4]30G28 (CA)	44J40 (US) [4]81J20 (CA)		71M80 (US) [4]44W92 (CA)	69M29 (US) [4]44W92 (CA)	60L46 (US) [4]44W93 (CA)
070	[6]1-1/2	[3]YES	YES	[1]YES	[5]YES	[2]YES		
	2	[3]YES	YES	[1]YES	[5]YES	[2]YES		
	2-1/2	[3]YES	YES	[1]YES	[5]YES	[2]YES		
	3	[3]YES	YES	[1]YES	[5]YES	[2]YES		
090	2	[3]YES		YES	[5]YES		YES	YES
	2-1/2	[3]YES		YES	[5]YES		YES	YES
	3	[3]YES		YES	[5]YES		YES	YES
110	2	YES		YES	[5]YES		YES	YES
	2-1/2	YES		YES	[5]YES		YES	YES
	3	YES		YES	[5]YES		YES	YES

NOTE - Standard Terminations do not include any vent pipe or elbows external to the structure. Any vent pipe or elbows external to the structure must be included in total vent length calculations. See vent length tables.

* Kits must be properly installed according to kit instructions.

1Requires field-provided outdoor 1-1/2” exhaust accelerator.

2Concentric kits 71M80 and 44W92 include 1-1/2 in. outdoor accelerator, when used with 070 input models. When 1-1/2 in. pipe is used it must transition to 2 in. pipe with the concentric kit.

3 Flush mount kits 51W11 and 51W12 includes 1-1/2 in. outdoor exhaust accelerator, required when used with 070 and 090 input models. When 1-1/2 in. pipe is used it must transition to 2 in. pipe with the flush mount kit.

4 Termination kits 30G28, 44W92, 4493 and 81J20 are certified to ULC S636 for use in Canada only.

5 See TABLE 8 for vent accelerator requirements.

6 2 in. to 1-1/2 in. **field provided** reducer required.

Venting Options

The SLP99DF is shipped with vent exhaust / air intake connection at the top cap. See FIGURE 15. Using parts provided, the furnace may be field modified to have these connections on the right side of the furnace cabinet. See FIGURE 17 and follow the steps below. For left side venting order kit 87W73.

1 - Remove inner blower door.

2 - Loosen hose clamps which attach rubber fittings to the white PVC pipes inside the vestibule area. See FIGURE 15.

3 - Loosen the clamp which secures the pipes at the blower deck. See FIGURE 15.

4 - Remove white PVC pipes, slide up and out thru the top cap.

5 - Remove the remaining parts of the pipe clamp at the blower deck.

6 - Remove the black plastic fitting in top cap which previously aligned the PVC pipes.

7 - Remove the sheet metal patch plate on the side of the cabinet which covers the openings for side venting option. Save screws for reuse.

8 - Re-use the patch plate to cover the hole in the top cap. See FIGURE 16. Remove the 2 screws which secure the top cap to the furnace on the right side and re-install securing the right edge of the patch plate and the right side of the top cap to the furnace. Use 2 self-drilling sheet metal screws (provided) to finish securing the left edge of the patch plate on the left side.

9 - Use a utility knife to cut out the cabinet insulation for the right side vent / air intake.

10 - Install the two 90° street elbows (provided) through the side of the cabinet. The male side of each elbow should extend down through the blower deck and connect to the rubber fittings below. Once the elbows are properly positioned, tighten each clamp.

11 - Peel protective backing from side vent sealing gaskets (2) and apply to side vent sealing plates (2) as shown in FIGURE 17.

12 - Install the side vent sealing plates and gaskets on the exterior of the cabinet as shown in figure 15. Secure with six mounting screws (four reused and two provided from bag assembly). Holes are pre-punched in the parts and cabinet, no drilling is required.

13 - Install sheet metal screws (provided) to seal extra two holes in cabinet not used with side vent clamps.

⚠ IMPORTANT

Side vent sealing plates and side vent sealing gaskets must be used when converting to right side venting. Failure to use gaskets and plates may lead to improper operation of unit.

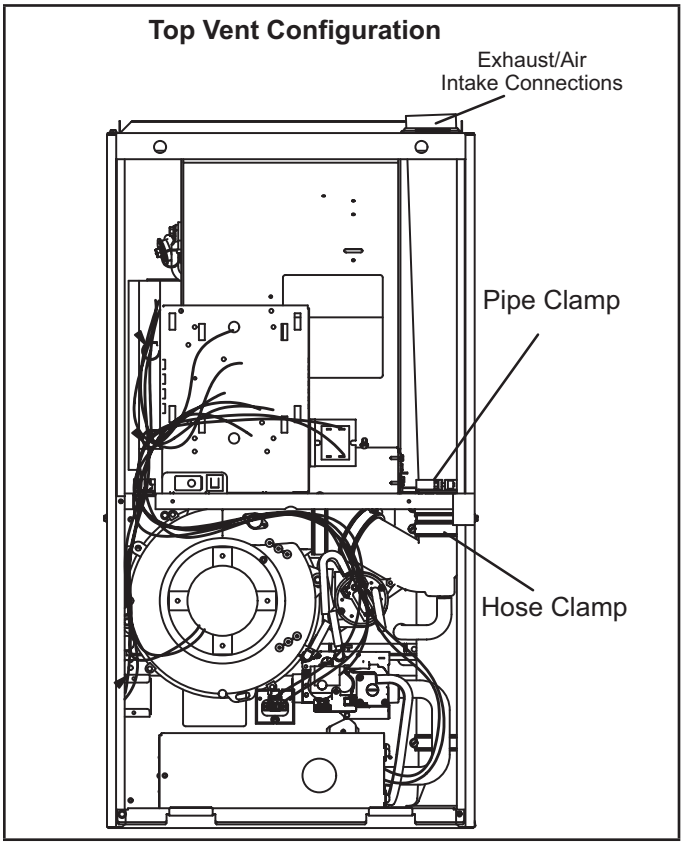

FIGURE 15

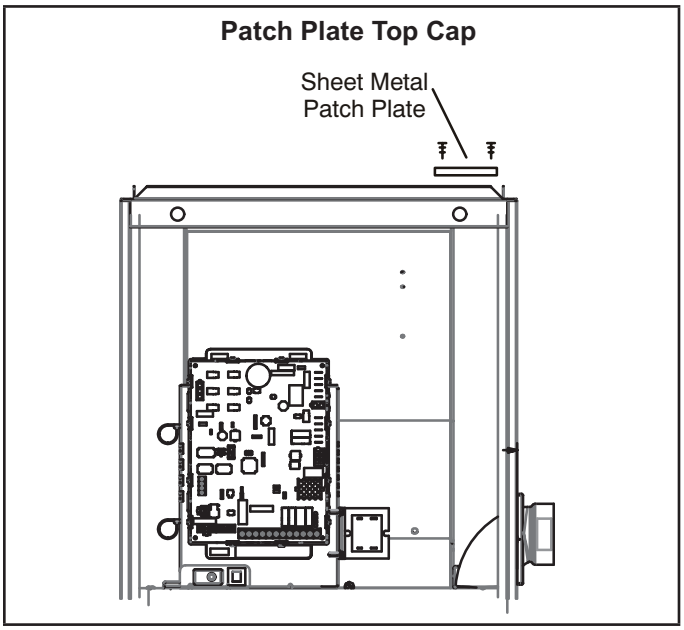

FIGURE 16

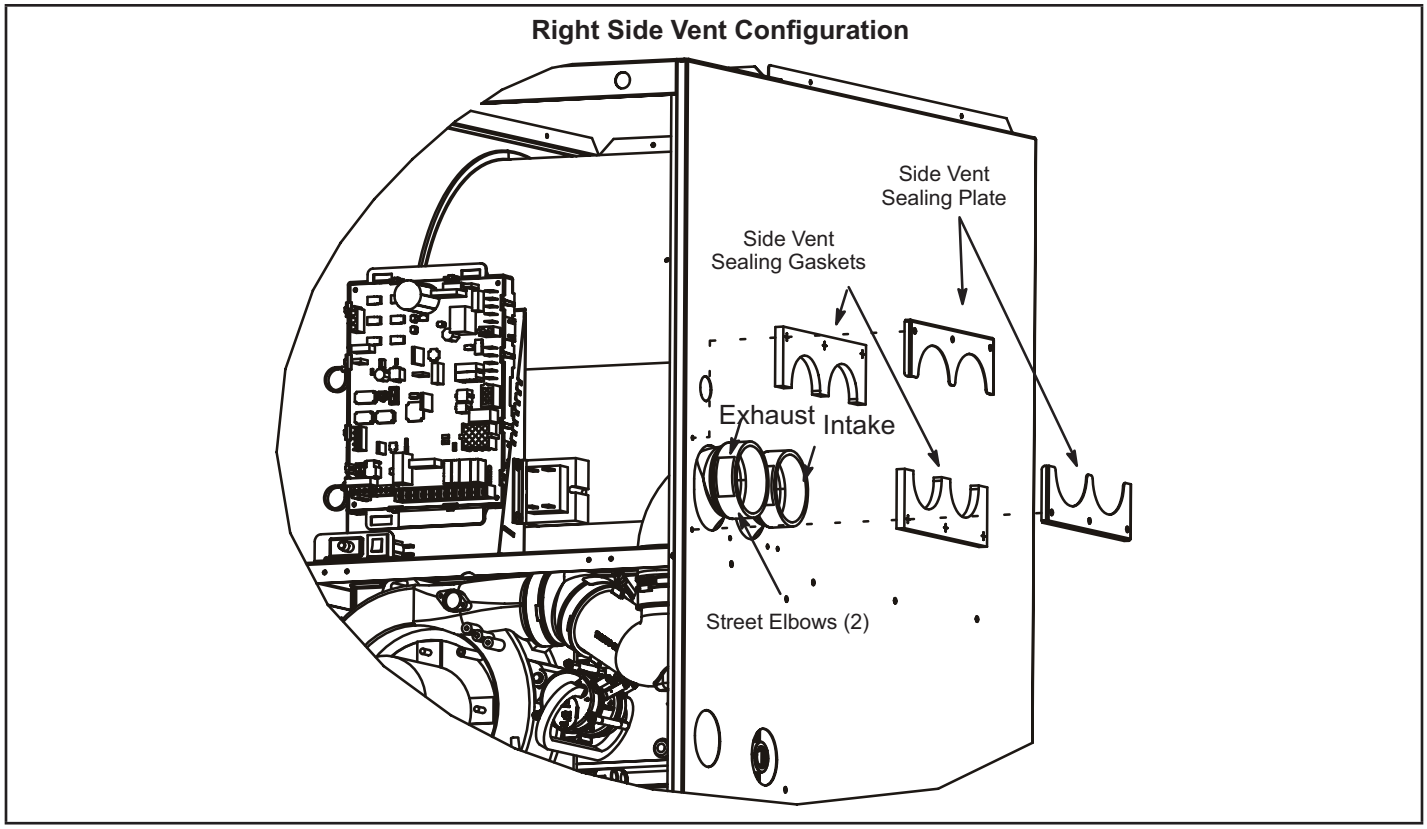

FIGURE 17

Joint Cementing Procedure

All cementing of joints should be done according to these pecifications outlined in ASTM D 2855.

NOTE - *A sheet metal screw may be used to secure the intake pipe to the connector, if desired. Use a drill or self tapping screw to make a pilot hole.*

⚠ DANGER

DANGER OF EXPLOSION! Fumes from PVC glue may ignite during system check. Allow fumes to dissipate for at least 5 minutes before placing unit into operation.

1 - Measure and cut vent pipe to desired length.

2 - Debur and chamfer end of pipe, removing any ridges or rough edges. If end is not chamfered, edge of pipe may remove cement from fitting socket and result in a leaking joint.

3 - Clean and dry surfaces to be joined.

NOTE - *Check the inside of vent pipe thoroughly for any obstruction that may alter furnace operation.*

4 - Test fit joint and mark depth of fitting on outside of pipe.

5 - Uniformly apply a liberal coat of PVC primer for PVC or use a clean dry cloth for ABS to clean inside socket surface of fitting and male end of pipe to depth of fitting socket.

6 - Promptly apply solvent cement to end of pipe and inside socket surface of fitting. Cement should be applied lightly but uniformly to inside of socket. Take care to keep excess cement out of socket. Apply second coat to end of pipe.

NOTE - *Time is critical at this stage. Do not allow primer to dry before applying cement.*

7 - Immediately after applying last coat of cement to pipe, and while both inside socket surface and end of pipe are wet with cement, forcefully insert end of pipe into socket until it bottoms out. Turn PVC pipe 1/4 turn during assembly (but not after pipe is fully inserted) to distribute cement evenly. DO NOT turn ABS or cellular core pipe.

NOTE - *Assembly should be completed within 20 seconds after last application of cement. Hammer blows should not be used when inserting pipe.*

8 - After assembly, wipe excess cement from pipe at end of fitting socket. A properly made joint will show a bead around its entire perimeter. Any gaps may indicate a defective assembly due to insufficient solvent.

9 - Handle joints carefully until completely set.

Venting Pracitces

NOTE - *For any Low GWP refrigerant systems with exposed line set joints installed in the same space, each non-direct vent furnace system must have a refrigerant detection sensor installed below the level of the burners (See "SECONDARY SENSOR REQUIREMENTS" on page 50). Any direct vent furnace system is not subject to this requirement.*

HORIZONTAL PIPING SUPPORT GUIDELINES

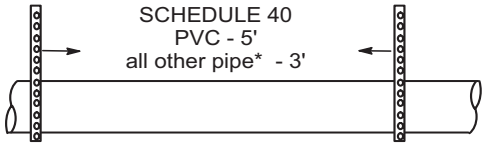

** See Piping and Fittings Specifications table*

NOTE - *Vertical support guidelines: Recommend following the guidelines in the International Plumbing code for PVC.*

NOTE *- Isolate piping at the point where it exits the outside wall or roof in order to prevent transmission of vibration to the structure.*

Wall Thickness Guidelines

24" maximum
3/4" minimum

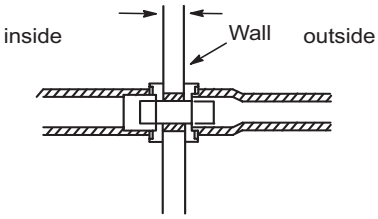

FIGURE 18

REPLACING FURNACE THAT WAS PART OF A COMMON VENT SYSTEM

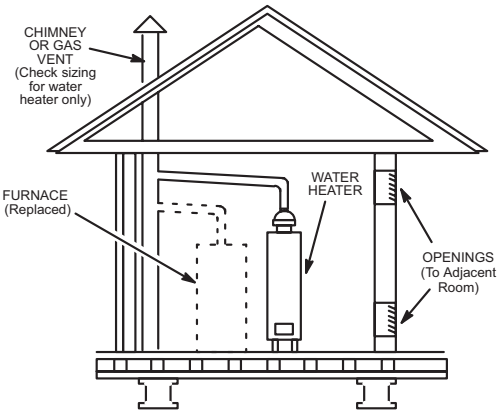

If replacing a furnace which was commonly vented with another gas appliance, the size of the existing vent pipe for that gas appliance must be checked. Without the heat of the original furnace flue products, the existing vent pipe is probably oversized for the single water heater or other appliance. The vent should be checked for proper draw with the remaining appliance.

FIGURE 19

1 - n areas where piping penetrates joists or interior walls, hole must be large enough to allow clearance on all sides of pipe through center of hole using a hanger.

2 - When furnace is installed in a residence where unit is shut down for an extended period of time, such as a vacation home, make provisions for draining condensate collection trap and lines.

Exhaust Piping (FIGURE 21 and FIGURE 22)

Route piping to outside of structure. Continue with installation following instructions given in piping termination section.

⚠ WARNING

Carbon Monoxide Poisoning Hazard

Cutting or altering exhaust or air intake pipes, which are located in the blower compartment, could result in Carbon Monoxide Poisoning or Death.

⚠ CAUTION

Do not discharge exhaust into an existing stack or stack that also serves another gas appliance. If vertical discharge through an existing unused stack is required, insert PVC pipe inside the stack until the end is even with the top or outlet end of the metal stack.

⚠ CAUTION

The exhaust vent pipe operates under positive pressure and must be completely sealed to prevent leakage of combustion products into the living space.

Vent piping Guidliens

NOTE - *Lennox has approved the use of DuraVent® and Centrotherm manufactured vent pipe and terminations as an option to PVC. When using the PolyPro® by DuraVent or InnoFlue® by Centrotherm venting system the vent pipe requirements stated in the unit installation instruction – minimum & maximum vent lengths, termination clearances, etc. – apply and must be followed. Follow the instructions provided with PoyPro by DuraVent and InnoFlue® by Centrotherm venting system for assembly or if requirements are more restrictive. The PolyPro by Duravent and InnoFlue by Centrotherm venting system must also follow the uninsulated and unconditioned space criteria listed in TABLE 10.*

The SLP99DFVK is installed only as a Direct Vent gas central furnace.

NOTE - *In Direct Vent installations, combustion air is taken from outdoors and flue gases are discharged outdoors. Intake and exhaust pipe sizing -- Size pipe according to TABLE 7 and TABLE 8. Count all elbows inside and outside the home. TABLE 7 lists the minimum vent pipe lengths permitted. TABLE 8 lists the maximum pipe lengths permitted.*

Regardless of the diameter of pipe used, the standard roof and wall terminations described in section Exhaust Piping Terminations should be used. Exhaust vent termination pipe is sized to optimize the velocity of the exhaust gas as it exits the termination. Refer to TABLE 10.

In some applications which permit the use of several different sizes of vent pipe, a combination vent pipe may be used. Contact Lennox' Application Department for assistance in sizing vent pipe in these applications.

TABLE 7		
MINIMUM VENT PIPE LENGTHS		
SLP99DF Model	Min. Equiv. Vent Lenght	Example
070	15 ft.*	5 ft. plus 2 elbows of 1-1/2", 2", 2-1/2" or 3" diameter pipe
090,110		5 ft. plus 2 elbows of 2", 2-1/2" or 3" diameter pipe

**Any approved termination may be added to the minimum equivalent length listed. Two 45 degree elbows are the equivalent to one 90 degree elbow.*

***NOTE -** It is acceptable to use any pipe size which fits within the guidelines allowed in TABLE 8.*

***NOTE -** The exhaust collar on all models is sized to accommodate 2" Schedule 40 vent pipe. Contact the Application Department for more information concerning sizing of vent systems which include multiple pipe sizes.*

***NOTE -** If right side venting option is used, you must include the elbow at the furnace in the elbow count. If transitioning to 3" dia pipe, this elbow equates to 20' of equivalent vent length for all models.*

***NOTE -** All horizontal runs of exhaust pipe must slope back toward unit. A minimum of 1/4" (6mm) drop for each 12" (305mm) of horizontal run is mandatory for drainage.*

***NOTE -** Exhaust pipe MUST be glued to furnace exhaust fittings.*

***NOTE -** Exhaust piping should be checked carefully to make sure there are no sags or low spots.*

Use the following steps to correctly size vent pipe diameter.

⚠ IMPORTANT

Do not use screens or perforated metal in exhaust or intake terminations. Doing so will cause freeze-ups and may block the terminations.

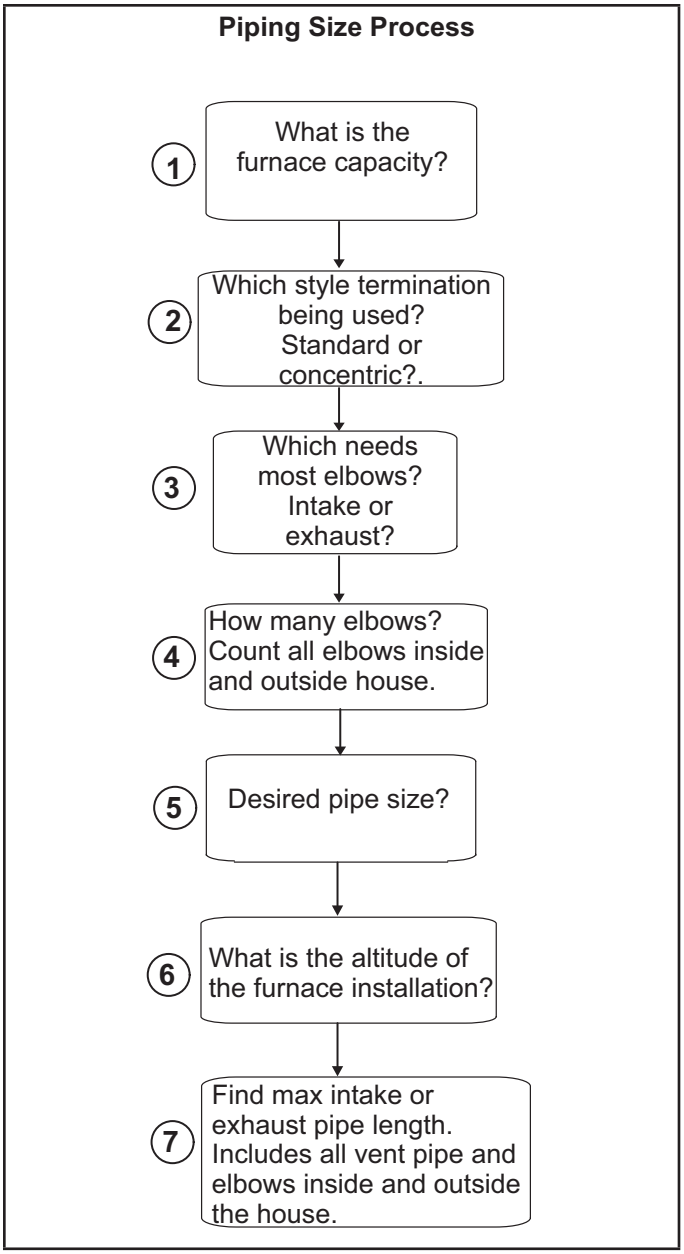

FIGURE 20

***NOTE -** Lennox offers a glueless vent adapter kit 17H92 as an option for exhaust exiting at the furnace top cap coupling.*

TABLE 8

Maximum Allowable Intake or Exhaust Vent Length in Feet

*Size intake and exhaust pipe length separately. Values in table are for Intake OR Exhaust, not combined total. Both Intake and Exhaust must be same pipe size.

NOTE - Additional vent pipe and elbows used to terminate the vent pipe outside the structure must be included in the total vent length calculation.

Standard Termination at Elevation 0 - 4500’												
Number Of 90° Elbows Used	1-1/2” Pipe Model			2” Pipe Model			2-1/2” Pipe Model			3” Pipe Model		
	070	090	110	070	090	110	070	090	110	070	090	110
1	15	N/A	N/A	91	69	14	140	93	43	162	143	118
2	10			86	64	9	135	88	38	157	138	113
3	N/A			81	59	N/A	130	83	33	152	133	108
4				76	54		125	78	28	147	128	103
5				71	49		120	73	23	142	123	98
6				66	44		115	68	18	137	118	93
7				61	39		110	63	13	132	113	88
8				56	34		105	58	N/A	127	108	83
9				51	29		100	53		122	103	78
10				46	24		95	48		117	98	73
Standard Termination at Elevation 4501’ - 7500’												
Number of 90° Elbows Used	1-1/2” Pipe Model			2” Pipe Model			2-1/2” Pipe Model			3” Pipe Model		
	070	090	110	070	090	110	070	090	110	070	090	110
1	13	N/A	N/A	66	69	14	115	93	43	137	143	118
2	8			61	64	9	110	88	38	132	138	113
3	N/A			56	59	N/A	105	83	33	127	133	108
4				51	54		100	78	28	122	128	103
5				46	49		95	73	23	117	123	98
6				41	44		90	68	18	112	118	93
7				36	39		85	63	13	107	113	88
8				31	34		80	58		102	108	83
9				26	29		75	53		97	103	78
10				21	24		70	48		92	98	73
Standard Termination 7501’ - 10,000”												
Number of 90° Elbows Used	1-1/2 Pipe Model			2” Pipe Model			2-1/2” Pipe Model			3” Pipe Model		
	070	090	110	070	090	110	070	090	110	070	090	110
1	N/A	N/A	N/A	41	44	N/A	90	68	N/A	112	118	93
2				36	39		85	63		107	113	88
3				31	34		80	58		102	108	83
4				26	29		75	53		97	103	78
5				21	24		70	48		92	98	73
6				16	19		65	43		87	93	68
7				11	14		60	38		82	88	63
8				N/A	N/A		55	33		77	83	58
9							50	28		72	78	53
10							45	23		67	73	48

***NOTE -** Table 8 continued on next page with concentric terminations.*

TABLE 8

Maximum Allowable Intake or Exhaust Vent Length in Feet

*Size intake and exhaust pipe length separately. Values in table are for Intake OR Exhaust, not combined total. Both Intake and Exhaust must be same pipe size.

Concentric Termination at Elevation 0 - 4500'

Number Of 90° Elbows Used	1-1/2" Pipe Model			2" Pipe Model			2-1/2" Pipe Model			3" Pipe Model		
	070	090	110	070	090	110	070	090	110	070	090	110
1	10	N/A	N/A	83	67	12	130	89	39	146	139	114
2	N/A			78	62	7	125	84	34	141	134	109
3				73	57	N/A	120	79	29	136	129	104
4				68	52		115	74	24	131	124	99
5				63	47		110	69	19	126	119	94
6				58	42		105	64	14	121	114	89
7				53	37		100	59	N/A	116	109	84
8				48	32		95	54		111	104	79
9				43	27		90	49		106	99	74
10				38	22		85	44		101	94	69

Concentric Termination at Elevation 4501' - 7500'

Number of 90° Elbows Used	1-1/2" Pipe Model			2" Pipe Model			2-1/2" Pipe Model			3" Pipe Model		
	070	090	110	070	090	110	070	090	110	070	090	110
1	N/A	N/A	N/A	58	67	12	105	89	39	121	114	114
2				53	62	7	100	84	34	116	109	109
3				48	57	N/A	95	79	29	111	104	104
4				43	52		90	74	24	106	99	99
5				38	47		85	69	19	101	94	94
6				33	42		80	64	14	96	89	89
7				28	37		75	59	N/A	91	84	84
8				23	32		70	54		86	79	79
9				18	27		65	49		81	74	74
10				13	22		60	44		76	69	69

Concentric Termination 7501' - 10,000"

Number of 90° Elbows Used	1-1/2" Pipe Model			2" Pipe Model			2-1/2" Pipe Model			3" Pipe Model		
	070	090	110	070	090	110	070	090	110	070	090	110
1	N/A	N/A	N/A	33	42	N/A	80	64	N/A	96	114	89
2				28	37		75	59		91	109	84
3				23	32		70	54		86	104	79
4				18	27		65	49		81	99	74
5				13	22		60	44		76	94	69
6				N/A	17		55	39		71	89	64
7					12		50	34		66	84	59
8					N/A		45	29		61	79	54
9							40	24		56	74	49
10							35	19		51	69	44

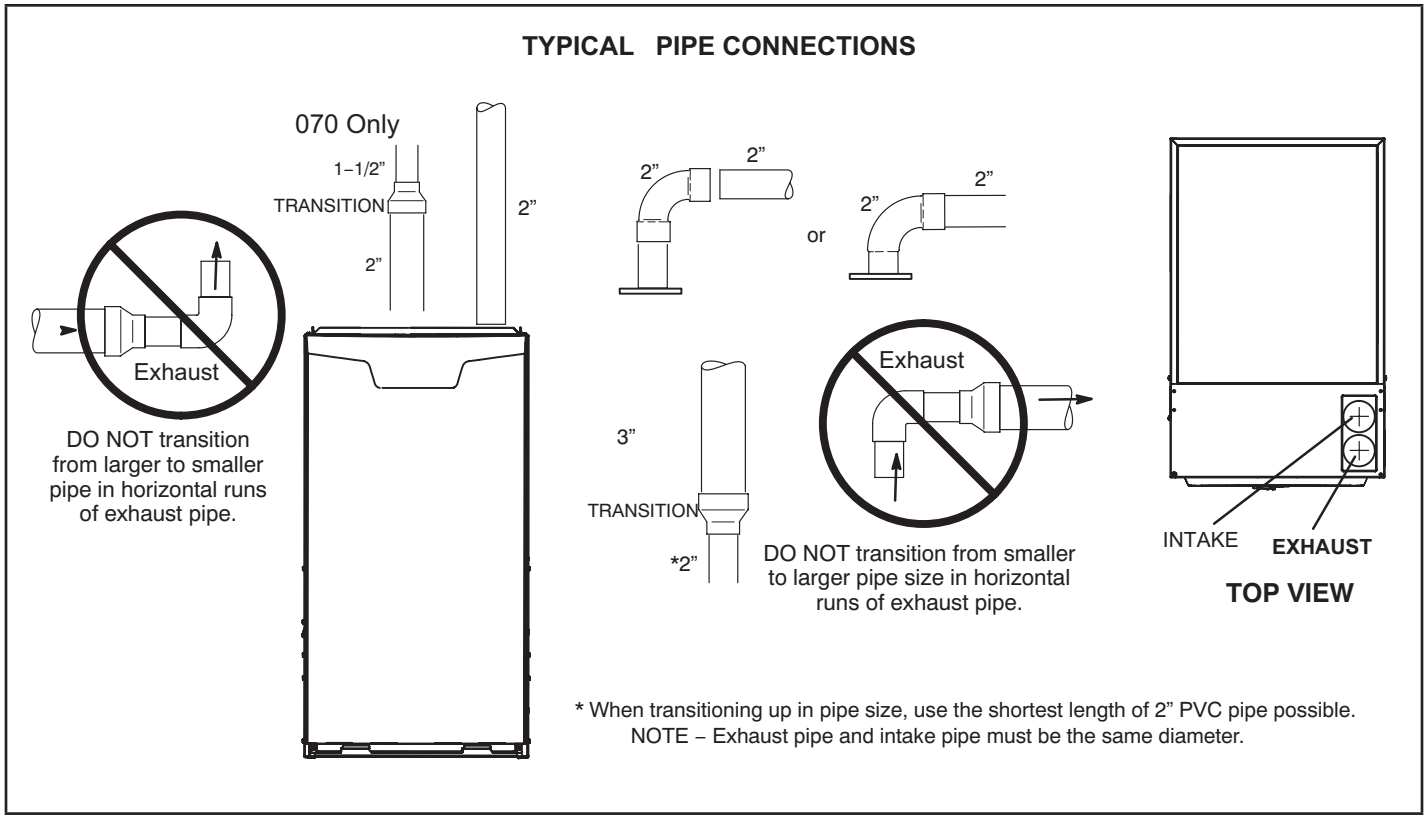
TYPICAL PIPE CONNECTIONS
070 Only
1–1/2”
TRANSITION
2”
2”
Exhaust
DO NOT transition from larger to smaller pipe in horizontal runs of exhaust pipe.
2”
2”
or
2”
2”
3”
TRANSITION
*2”
Exhaust
DO NOT transition from smaller to larger pipe size in horizontal runs of exhaust pipe.
INTAKE
EXHAUST
TOP VIEW
* When transitioning up in pipe size, use the shortest length of 2” PVC pipe possible.
NOTE – Exhaust pipe and intake pipe must be the same diameter.

FIGURE 21

TYPICAL EXHAUST CONNECTIONS WITH RIGHT SIDE VENT OPTION

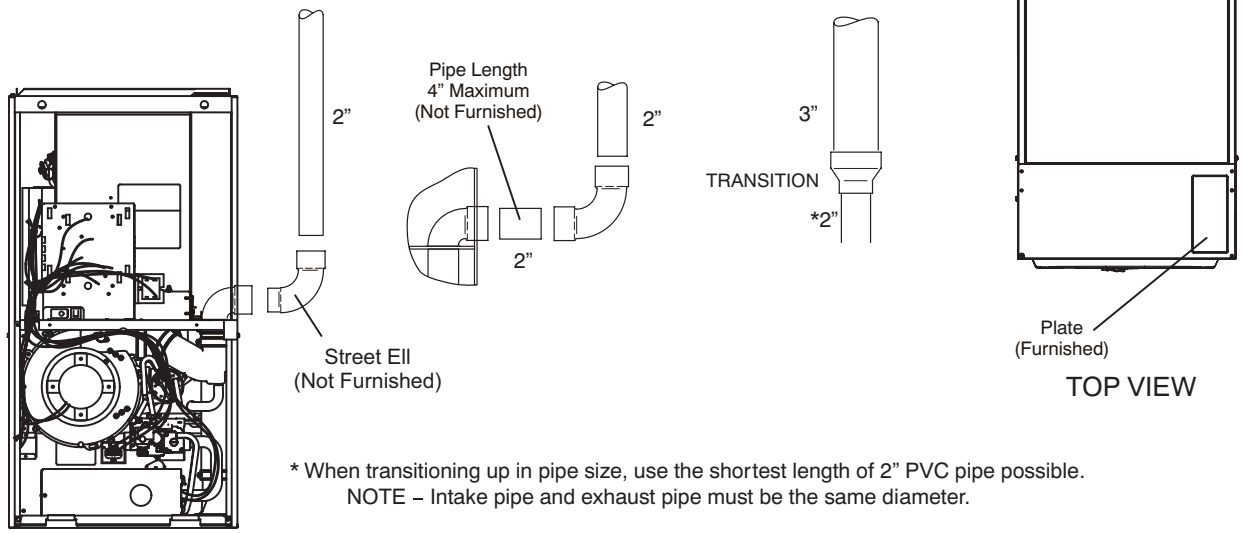

* When transitioning up in pipe size, use the shortest length of 2” PVC pipe possible.
NOTE – Intake pipe and exhaust pipe must be the same diameter.

FIGURE 22

TYPICAL AIR INTAKE PIPE CONNECTIONS WITH RIGHT SIDE VENT OPTION

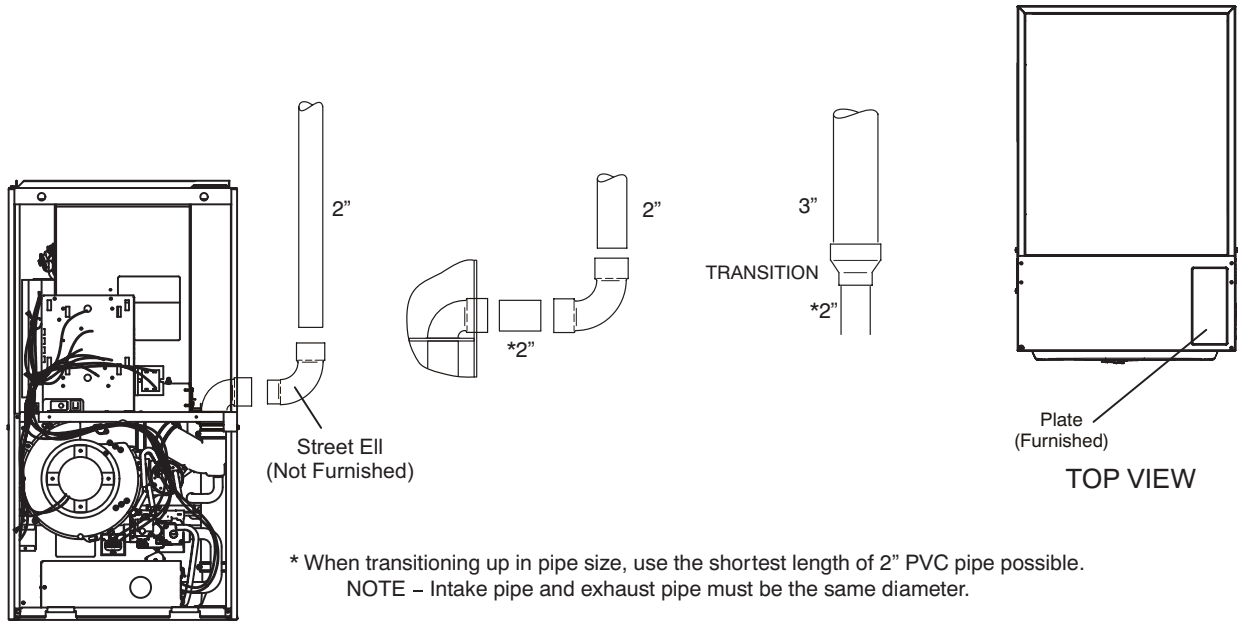

* When transitioning up in pipe size, use the shortest length of 2” PVC pipe possible.
NOTE – Intake pipe and exhaust pipe must be the same diameter.

FIGURE 23

VENT TERMINATION CLEARANCES FOR DIRECT VENT INSTALLATIONS IN THE US AND CANADA

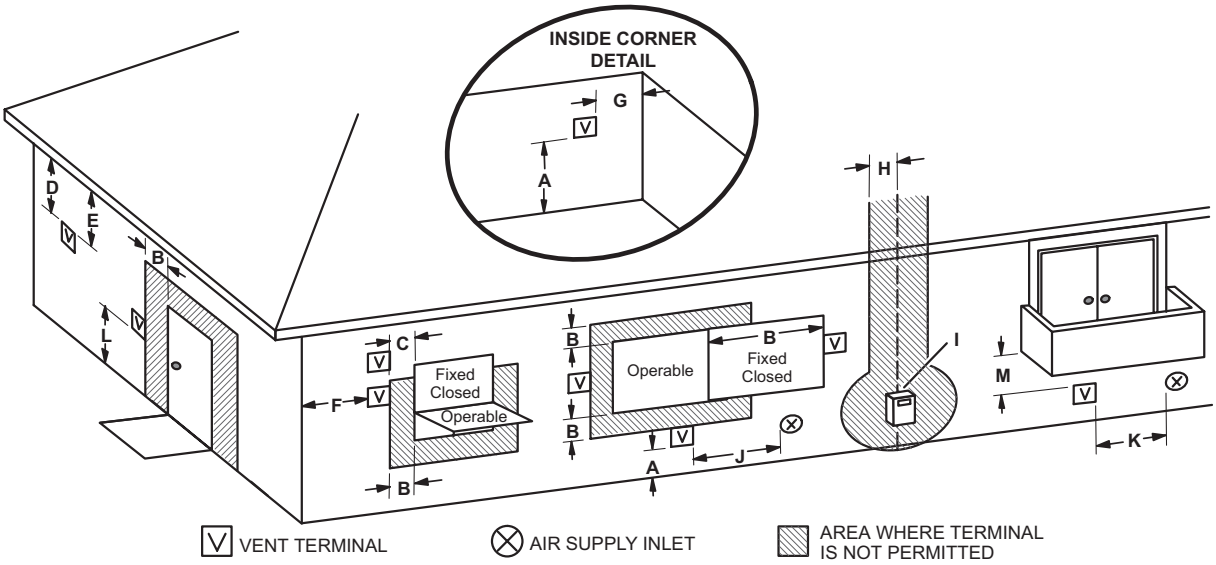

		US Installations[1]	Canadian Installations[2]
A =	Clearance above grade, veranda, porch, deck or balcony	12 inches (305mm) or 12 in. (305mm) above average snow accumulation.	12 inches (305mm) or 12 in. (305mm) above average snow accumulation.
B =	Clearance to window or door that may be opened	6 inches (152mm) for appliances <10,000 Btuh (3kw), 9 inches (228mm) for appliances > 10,000 Btuh (3kw) and <50,000 Btuh (15 kw), 12 inches (305mm) for appliances > 50,000 Btuh (15kw)	6 inches (152mm) for appliances <10,000 Btuh (3kw), 12 inches (305mm) for appliances > 10,000 Btuh (3kw) and <100,000 Btuh (30kw), 36 inches (.9m) for appliances > 100,000 Btuh (30kw)
C =	Clearance to permanently closed window	* 12”	* 12”
D =	Vertical clearance to ventilated soffit located above the terminal within a horizontal distance of 2 feet (610mm) from the center line of the terminal	* Equal to or greater than soffit depth	* Equal to or greater than soffit depth
E =	Clearance to unventilated soffit	* Equal to or greater than soffit depth	* Equal to or greater than soffit depth
F =	Clearance to outside corner	* No minimum to outside corner	* No minimum to outside corner
G =	Clearance to inside corner	*	*
H =	Clearance to each side of center line extended above meter / regulator assembly	3 feet (.9m) within a height 15 feet (4.5m) above the meter / regulator assembly	3 feet (.9m) within a height 15 feet (4.5m) above the meter / regulator assembly
I =	Clearance to service regulator vent outlet	* 3 feet (.9m)	3 feet (.9m)
J =	Clearance to non-mechanical air supply inlet to building or the combustion air inlet to any other appliance	6 inches (152mm) for appliances <10,000 Btuh (3kw), 9 inches (228mm) for appliances > 10,000 Btuh (3kw) and <50,000 Btuh (15 kw), 12 inches (305mm) for appliances > 50,000 Btuh (15kw)	6 inches (152mm) for appliances <10,000 Btuh (3kw), 12 inches (305mm) for appliances > 10,000 Btuh (3kw) and <100,000 Btuh (30kw), 36 inches (.9m) for appliances > 100,000 Btuh (30kw)
K =	Clearance to mechanical air supply inlet	3 feet (.9m) above if within 10 feet (3m) horizontally	6 feet (1.8m)
L =	Clearance above paved sidewalk or paved driveway located on public property	* 7 feet (2.1m)	7 feet (2.1m)†
M =	Clearance under veranda, porch, deck or balcony	*12 inches (305mm)‡	12 inches (305mm)‡

[1] In accordance with the current ANSI Z223.1/NFPA 54 Natural Fuel Gas Code

[2] In accordance with the current CSA B149.1, Natural Gas and Propane Installation Code

† A vent shall not terminate directly above a sidewalk or paved driveway that is located between two single family dwellings and serves both dwellings.

‡ Permitted only if veranda, porch, deck or balcony is fully open on a minimum of two sides beneath the floor. Lennox recommends avoiding this location if possible.

*For clearances not specified in ANSI Z223.1/NFPA 54 or CSA B149.1, clearance will be in accordance with local installation codes and the requirements of the gas supplier and these installation instructions.”

NOTE - *This figure is intended to illustrate clearance requirements and does not serve as a substitute for locally adopted installation codes.*

FIGURE 24

Crawl Space and Extended Horizontal VentingGenera

Lennox provides kit 51W18 (USA) and kit 15Z70 (Canada)to install 2” or 3” PVC exhaust piping through the floor joists and into the the crawl space. See FIGURE 25. This kit can also be used as a supplemental drain for installations with condensate run back in the vent pipe (ie. long horizontal runs, unconditioned spaces, etc.).

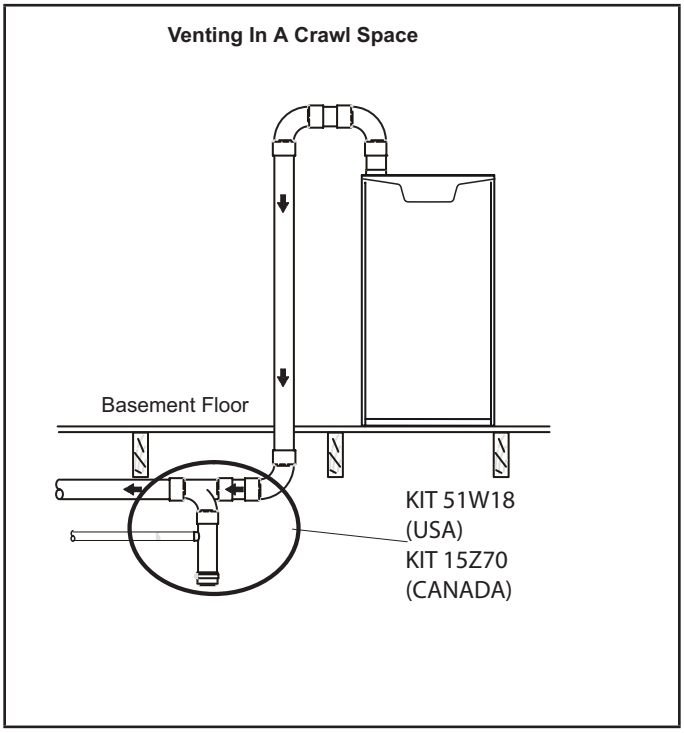

FIGURE 25

General Guidelines for Vent Terminations

In Direct Vent applications, combustion air is taken from outdoors and the flue gases are discharged to the outdoors. The SLP99DFVK is classified as a direct vent, Category IV gas furnace.

In Direct Vent applications, the vent termination is limited by local building codes. In the absence of local codes, refer to the current National Fuel Gas Code ANSI Z223-1/NFPA 54 in U.S.A., and current CSA-B149 Natural Gas and Propane Installation Codes in Canada for details.

Position termination according to location given in FIGURE 24. In addition, position termination so it is free from any obstructions and 12” above the average snow accumulation.

At vent termination, care must be taken to maintain protective coatings over building materials (prolonged exposure to exhaust condensate can destroy protective coatings). It is recommended that the exhaust outlet not be located within 6 feet (1.8m) of an outdoor AC unit because the condensate can damage the painted coating.

NOTE - *See TABLE 9 for maximum allowed exhaust pipe length without insulation in unconditioned space duringwinter design temperatures below 32°F (0°C). If required exhaust pipe should be insulated with 1/2” (13mm) Armaflex or equivalent. In extreme cold climate areas, 3/4” (19mm) Armaflex or equivalent may be necessary. Insulation must be protected from deterioration. Armaflex with UV protection is permissable. Basements or other enclosed areas that are not exposed to the outdoor ambient temperature and are above 32 degrees F (0°C) are to be considered conditioned spaces.*

⚠ IMPORTANT

Do not use screens or perforated metal in exhaust terminations. Doing so will cause freeze-ups and may block the terminations.

⚠ IMPORTANT

For Canadian Installations Only:

In accordance to CSA International B149 installation codes, the minimum allowed distance between the combustion air intake inlet and the exhaust outlet of other appliances shall not be less than 12 inches (305mm).

TABLE 9

Maximum Allowable Vent Pipe Length (in ft.)[3] Without Insulation In Unconditioned Space For Winter Design Temperatures Modulating High Efficiency Furnace

Winter Design Temperatures1 °F (°C)	Vent Pipe Diameter	Unit Input Size					
		070		090		110	
		PVC	[2]PP	PVC	[2]PP	PVC	[2]PP
32 to 21 (0 to -6)	1-1/2 in.	N/A	N/A	N/A	N/A	N/A	N/A
	2 in.	11	9	14	12	18	15
	2-1/2 in	7	N/A	10	N/A	12	N/A
	3 in.	2	2	6	6	8	8
20 to 1 (-7 to -17)	1-1/2 in.	N/A	N/A	N/A	N/A	N/A	N/A
	2 in.	3	1	6	4	8	6
	2-1/2 in.	1	N/A	1	N/A	3	N/A
	3 in.	1	1	1	1	1	1
0 to -20 (-18 to -29)	1-1/2 in.	N/A	N/A	N/A	N/A	N/A	N/A
	2 in.	1	1	1	1	2	1
	2-1/2 in.	1	N/A	1	N/A	1	N/A
	3 in.	1	1	1	1	N/A	N/A

1Refer to 99% Minimum Design Temperature table provided in the current edition of the ASHRAE Fundamentals Handbook.

2 *PolyPro® poly-propylene vent pipe is a registered trademark of DuraVent®. Innoflue® is a registered trademark of Centrotherm Eco Systems.ECCO Polypropylene Vent™is a registered trademark of ECCO Manufacturing™.*

3Vent lengths in table are *equivalent* length. Consider each elbow as 5ft of *linear* length.

NOTE - Concentric terminations are the equivalent of 5' and should be considered when measuring pipe length.

NOTE - Maximum uninsulated vent lengths listed may include the termination(vent pipe exterior to the structure) and cannot exceed 5 linear feet or the maximum allowable intake or exhaust vent length listed in TABLE 8 which ever is less.

NOTE - If insulation is required in an unconditioned space, it must be located on the pipe closest to the furnace. See FIGURE 26..

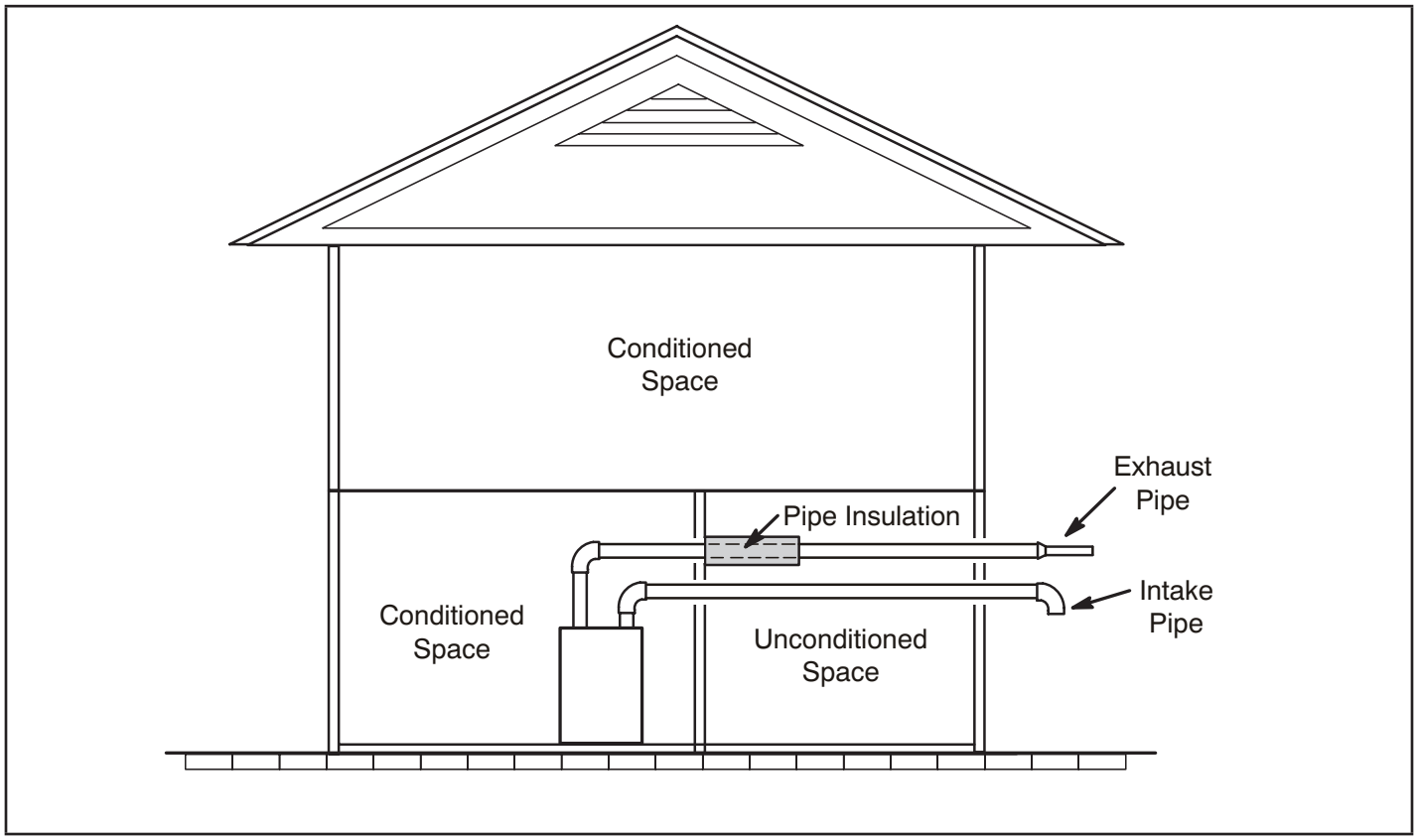

FIGURE 26

Details of Intake and Exhaust Piping Terminations for Direct Vent Installations

NOTE - *In Direct Vent installations, combustion air is taken from outdoors and flue gases are discharged to outdoors.*

NOTE - *Flue gas may be slightly acidic and may adversely affect some building materials. If any vent termination is used and the flue gasses may impinge on the building material, a corrosion-resistant shield (minimum 24 inches square) should be used to protect the wall surface. If the optional tee is used, the protective shield is recommended. The shield should be constructed using wood, plastic, sheet metal or other suitable material. All seams, joints, cracks, etc. in the affected area should be sealed using an appropriate sealant. See FIGURE 35.*

Intake and exhaust pipes may be routed either horizontally through an outside wall or vertically through the roof. In attic or closet installations, vertical termination through the roof is preferred. FIGURE 27 through FIGURE 32 shows typical terminations.

1 - Intake and exhaust terminations are not required to be in the same pressure zone. You may exit the intake on one side of the structure and the exhaust on another side (FIGURE 28). You may exit the exhaust out the roof and the intake out the side of the structure (FIGURE 29).

2 - Intake and exhaust pipes should be placed as close together as possible at termination end (refer to illustrations). Maximum separation is 3” (76mm) on roof terminations and 6” (152mm) on side wall terminations.

NOTE - *When venting in different pressure zones, the maximum separation requirement of intake and exhaust pipe DOES NOT apply.*

3 - On roof terminations, the intake piping should terminate straight down using two 90° elbows (See FIGURE 27).

4 - Exhaust piping must terminate straight out or up as shown. A reducer may be required on the exhaust piping at the point where it exits the structure to improve the velocity of exhaust away from the intake piping. See TABLE 10.

NOTE - *Care must be taken to avoid recirculation of exhaust back into intake pipe.*

TABLE 10

EXHAUST PIPE TERMINATION SIZE REDUCTION

SLP99DFVK Model	Termination Pipe Size
*070	1-1/2”
*090	2”
110	2”

**SLP99DF -070 and -090 units with the flush-mount termination must use the 1-1/2” accelerator supplied with the kit.*

5 - On field-supplied terminations for side wall exit, exhaust piping may extend a maximum of 12 inches (305mm) for 2” PVC and 20 inches (508mm) for 3” (76mm) PVC beyond the outside wall. Intake piping should be as short as possible. See FIGURE 35.

6 - On field-supplied terminations, a minimum distance between the end of the exhaust pipe and the end of the intake pipe without a termination elbow is 8” and a minimum distance of 6” with a termination elbow. See FIGURE 35.

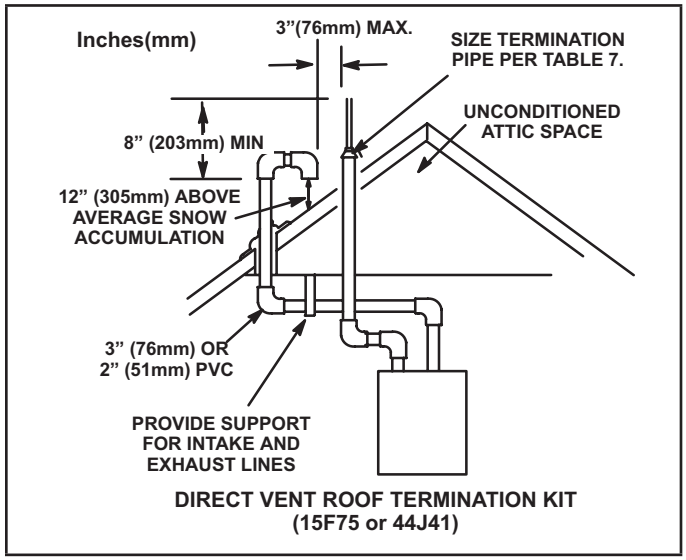

FIGURE 27

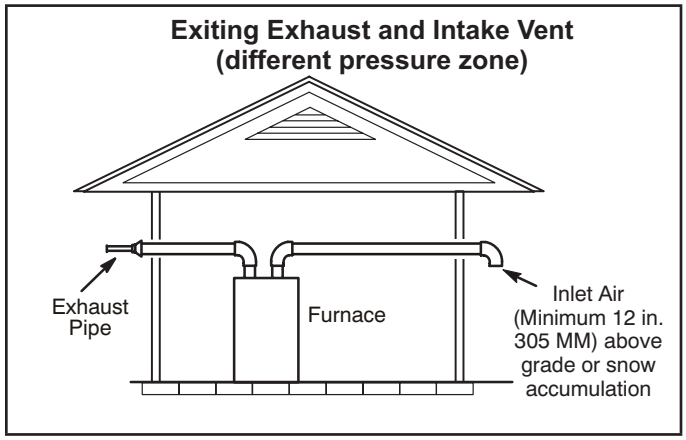

FIGURE 28

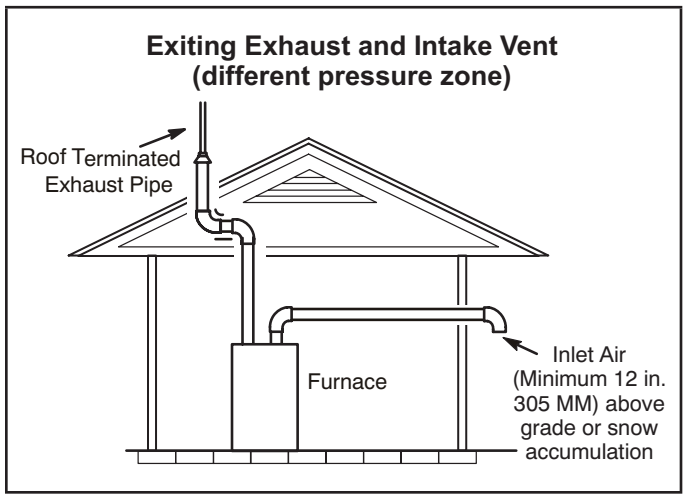

FIGURE 29

7 - If intake and exhaust piping must be run up a side wall to position above snow accumulation or other obstructions, piping must be supported. At least one bracket must be used within 6” from the top of the elbow and then every 24” (610mm) as shown in FIGURE 35, to prevent any movement in any direction. When exhaust and intake piping must be run up an outside wall, the exhaust piping must be terminated with pipe sized per table 9.The intake piping may be equipped with a 90° elbow turndown. Using turndown will add 5 feet (1.5m) to the equivalent length of the pipe.

8 - Based on the recommendation of the manufacturer, a multiple-furnace installation may use a group of up to four terminations assembled together horizontally, as shown in FIGURE 33.

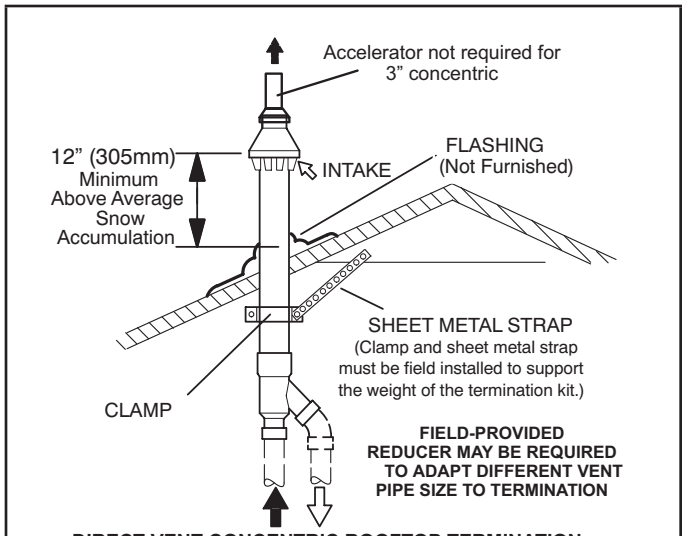

DIRECT VENT CONCENTRIC ROOFTOP TERMINATION
71M80, 69M29 or 60L46 (US)
44W92 or 44W93 (Canada)

FIGURE 30

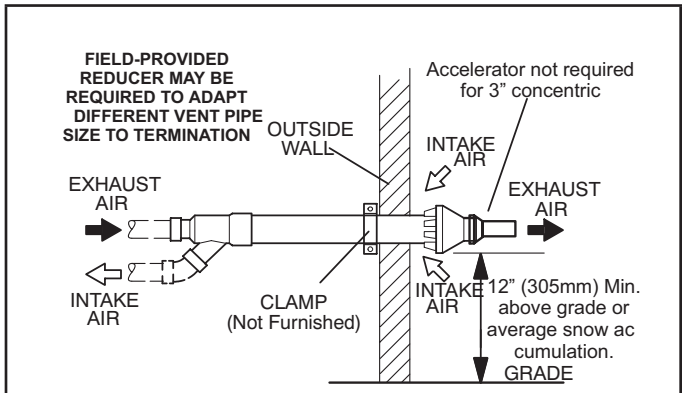

DIRECT VENT CONCENTRIC WALL TERMINATION
71M80, 69M29 or 60L46 (US)
44W92 or 44W93 (Canada)

FIGURE 31

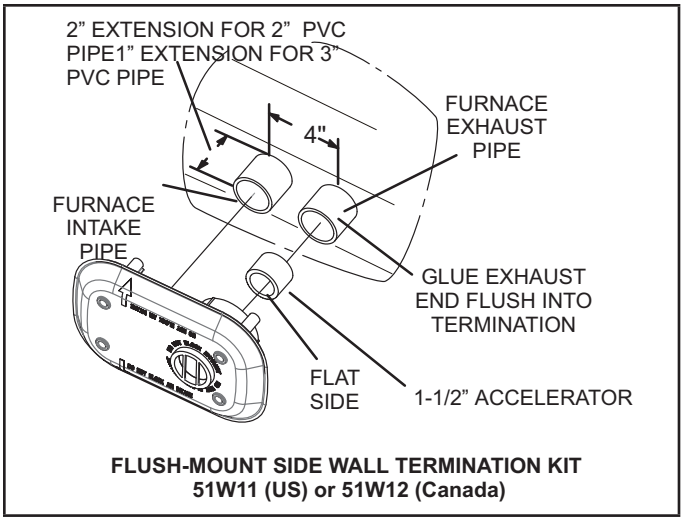

FLUSH-MOUNT SIDE WALL TERMINATION KIT
51W11 (US) or 51W12 (Canada)

FIGURE 32

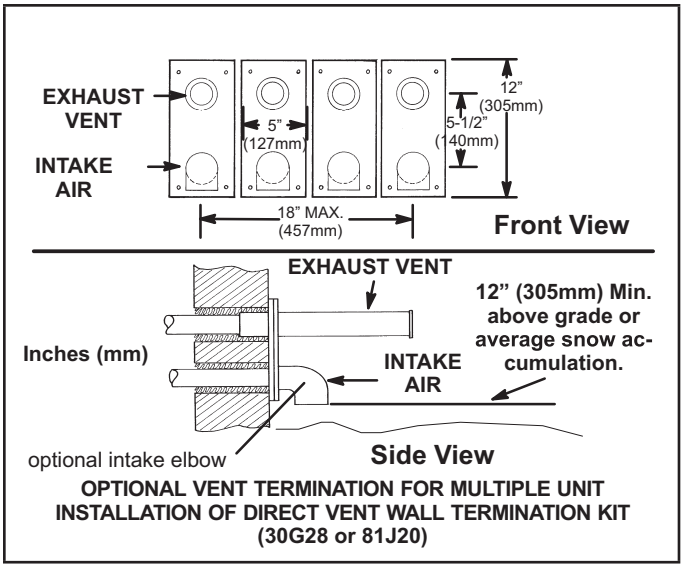

OPTIONAL VENT TERMINATION FOR MULTIPLE UNIT INSTALLATION OF DIRECT VENT WALL TERMINATION KIT (30G28 or 81J20)

FIGURE 33

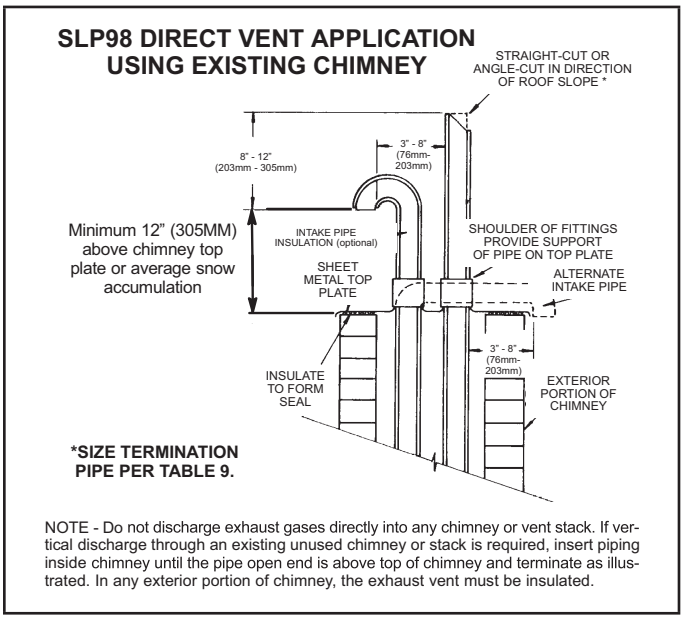

NOTE - Do not discharge exhaust gases directly into any chimney or vent stack. If vertical discharge through an existing unused chimney or stack is required, insert piping inside chimney until the pipe open end is above top of chimney and terminate as illustrated. In any exterior portion of chimney, the exhaust vent must be insulated.

FIGURE 34

FIELD FABRICATED WALL TERMINATION

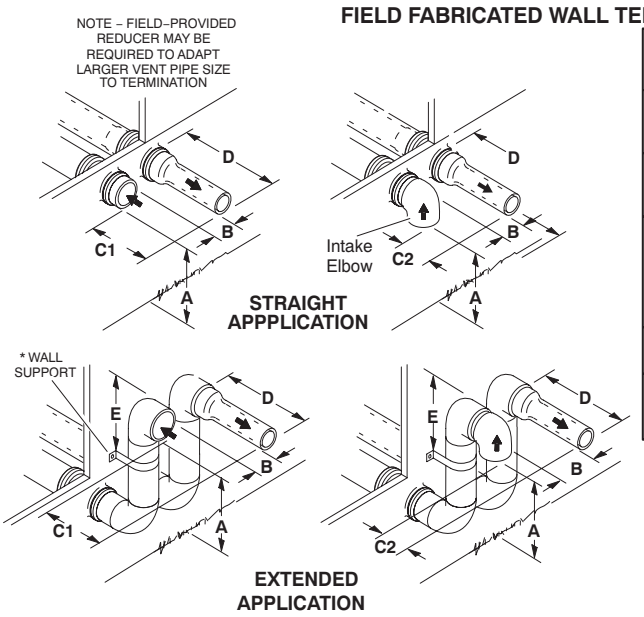

	2” (51mm) Vent Pipe	3” (76mm) Vent Pipe
A– Minimum clearance above grade or average snow accumulation	12” (305 mm)	12” (305 mm)
B– Maximum horizontal separation between intake and exhaust	6” (152 mm)	6” (152 mm)
C1 -Minimum from end of exhaust to inlet of intake	8” (203 mm)	8” (203 mm)
C2 -Minimum from end of exhaust to inlet of intake	6” (152 mm)	6” (152 mm)
D– Maximum exhaust pipe length	12” (305 mm)	20” (508 mm)
E– Maximum wall support distance from top of each pipe (intake/exhaust)	6” (152 mm)	6” (152 mm)

See maximum allowable venting tables for venting lengths with this arrangement.

* Use wall support every 24” (610 mm). Use two wall supports if extension is greater than 24” (610 mm) but less than 48” (1219 mm).

NOTE – One wall support must be within 6” (152 mm) from top of each pipe (intake and exhaust) to prevent movement in any direction.

ALTERNATE TERMINATIONS (TEE & FORTY–FIVE DEGREE ELBOWS ONLY)

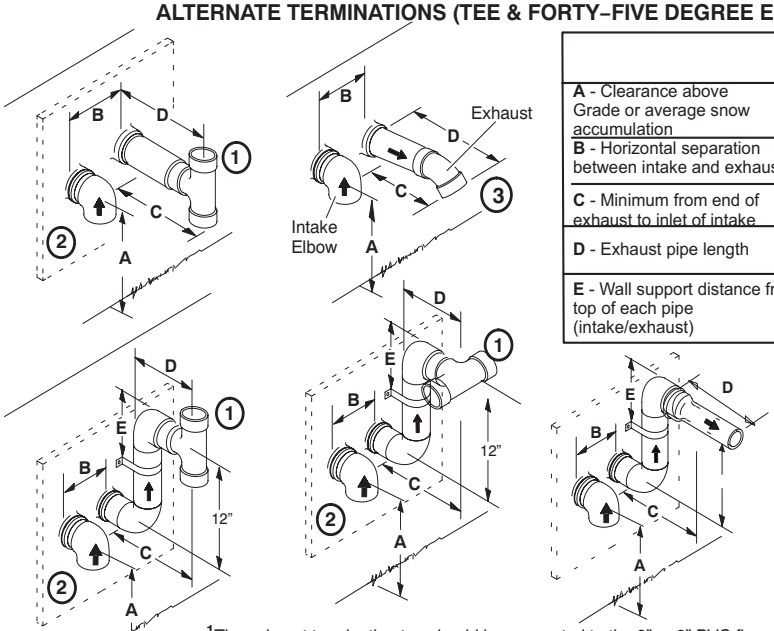

	2” (51mm) Vent Pipe	3” (76mm) Vent Pipe
A - Clearance above Grade or average snow accumulation	12” (305 mm) Min	12” (305 mm) Min
B - Horizontal separation between intake and exhaust	6” (152mm)min 24” (610mm)Max	6” (152mm)min 24” (610mm)Max
C - Minimum from end of exhaust to inlet of intake	9” (227mm)	9” (227mm)
D - Exhaust pipe length	12” (305mm)min 16” (405mm)Max	12” (305mm)min 16” (405mm)Max
E - Wall support distance from top of each pipe (intake/exhaust)	6” (152mm) Max	6” (152mm) Max

[1] The exhaust termination tee should be connected to the 2” or 3” PVC flue pipe as shown in the illustration. In horizontal tee applications there must be be a minimum of 3 ft away from covered patios or any living ares and cannot be within 3 ft of a window. Do not use an accelerator in applications that include an exhaust termination tee. The accelerator is not required.

[2] As required. Flue gas may be acidic and may adversely affect some building materials. If a side wall vent termination is used and flue gases will impinge on the building materials, a corrosion–resistant shield (24 inches square) should be used to protect the wall surface. If optional tee is used, the protective shield is recommended. The shield should be constructed using wood, sheet metal or other suitable material. All seams, joints, cracks, etc. in affected area, should be sealed using an appropriate sealant.

[3] Exhaust pipe 45° elbow can be rotated to the side away from the combustion air inlet to direct exhaust away from adjacent property. The exhaust must never be directed toward the combustion air inlet.

FIGURE 35

Condensate Piping

This unit is designed for either right- or left-side exit of condensate piping. Refer to FIGURE 36 and FIGURE 37 for condensate trap locations.

NOTE - *If necessary the condensate trap may be installed up to 5' away from the furnace. Use PVC pipe to connect trap to furnace condensate outlet. Piping from furnace must slope down a minimum of 1/4" per ft. toward trap.*

1 - Determine which side condensate piping will exit the unit, location of trap, field-provided fittings and length of PVC pipe required to reach available drain.

2 - Use a large flat head screw driver or a 1/2" drive socket extension and remove plug (FIGURE 36) from the cold end header box at the appropriate location on the side of the unit. Install provided 3/4 NPT street elbow fitting into cold end header box. Use Teflon tape or appropriate pipe dope

NOTE - *Cold end header box drain plugs are factory installed. Check the unused plug for tightness to prevent leakage.*

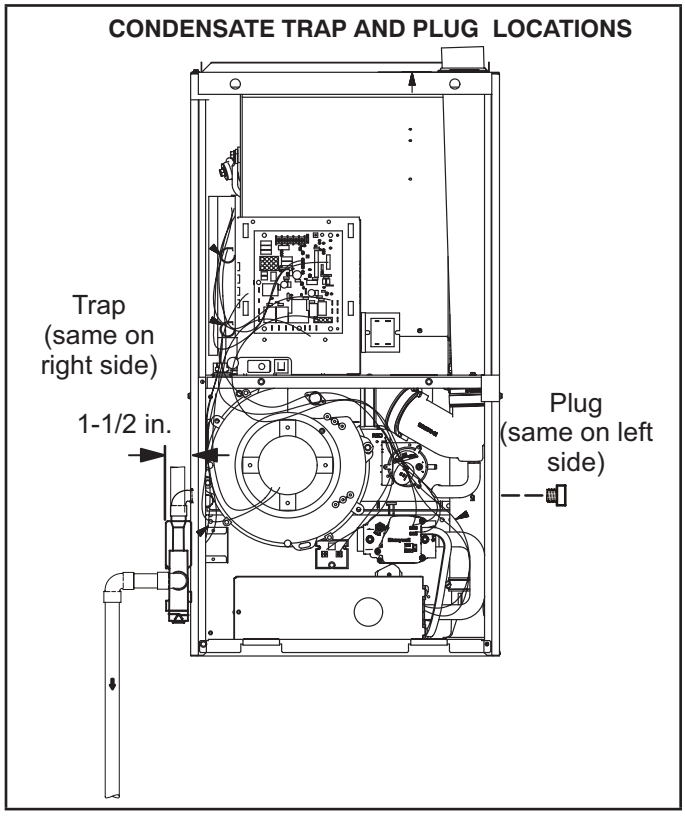

FIGURE 36

Install the cap over the clean out opening at the base of the trap. Secure with clamp. See FIGURE 42.

3 - Install drain trap using appropriate PVC fittings, glue all joints. Glue the provided drain trap as shown in FIGURE 42. Route the condensate line to an open drain.

4 - FIGURE 39 shows the furnace and evaporator coil using a separate drain. If necessary, the condensate line from the furnace and evaporator coil can drain together. See FIGURE 40 and FIGURE 41. The field provided vent must be a minimum 1" to a maximum 2" length above the condensate drain outlet connection.

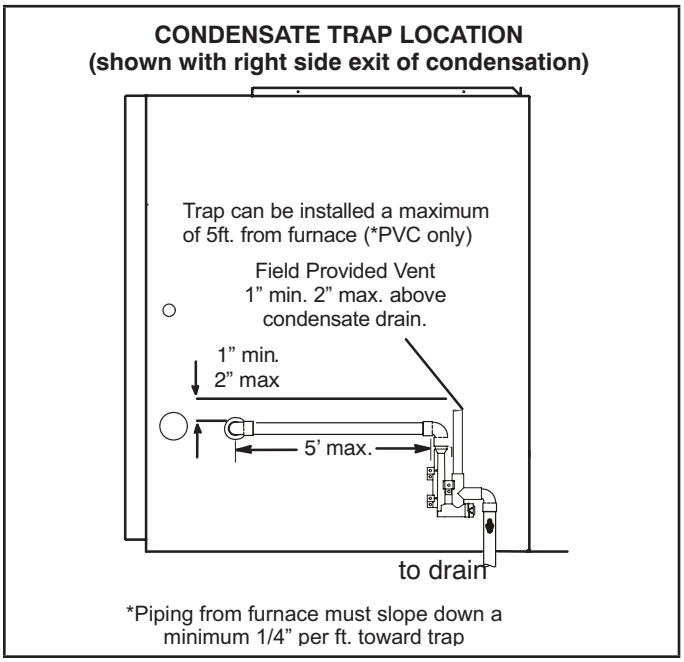

FIGURE 37

NOTE - *If necessary the condensate trap may be installed up to 5 feet away from the furnace. Piping from furnace must slope down a minimum of 1/4" per ft. toward trap.*

NOTE - *Appropriately sized tubing and barbed fitting may be used for condensate drain. Attach to the drain on the trap using a hose clamp. See FIGURE 38.*

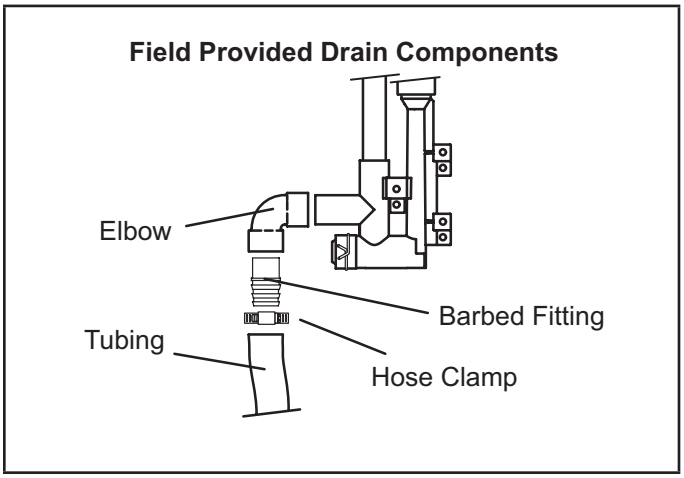

FIGURE 38

5 - If unit will be started immediately upon completion of installation, prime trap per procedure outlined in Unit Start-Up section.

Condensate line must slope downward away from the trap to drain. If drain level is above condensate trap, condensate pump must be used. Condensate drain line should be routed within the conditioned space to avoid freezing of condensate and blockage of drain line. If this is not possible, a heat cable kit may be used on the condensate trap and line. Heat cable kit is available from Lennox in various lengths; 6 ft. (1.8m) - kit no. 26K68 and 24 ft. (7.3m) - kit no. 26K69.

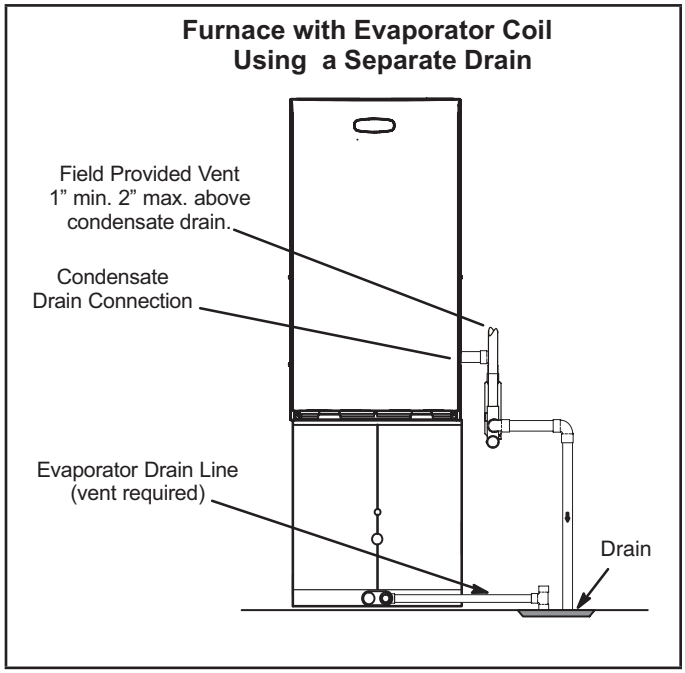

FIGURE 39

⚠ IMPORTANT

When combining the furnace and evaporator coil drains together, the A/C condensate drain outlet must be vented to relieve pressure in order for the furnace pressure switch to operate properly.

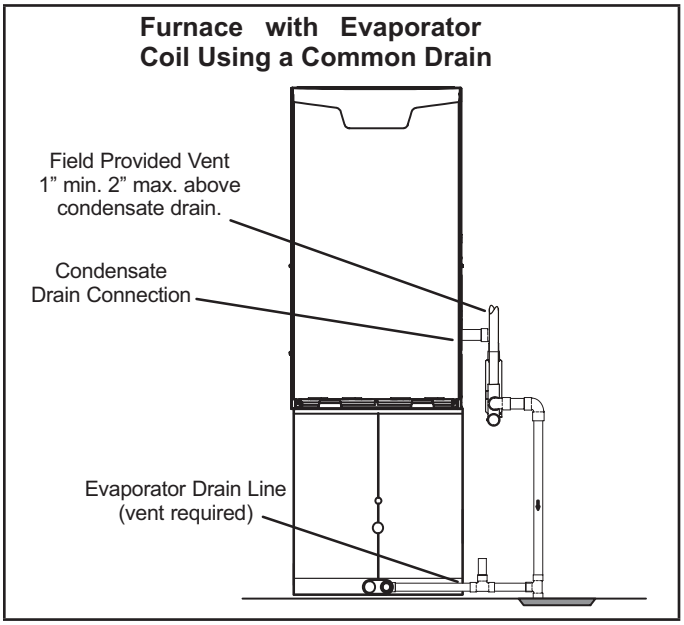

FIGURE 40

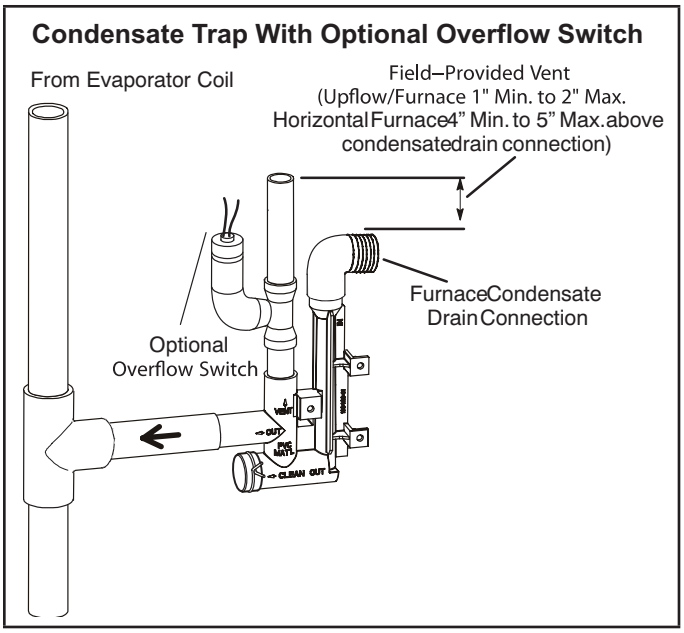

FIGURE 41

⚠ CAUTION

Do not use copper tubing or existing copper condensate lines for drain line.

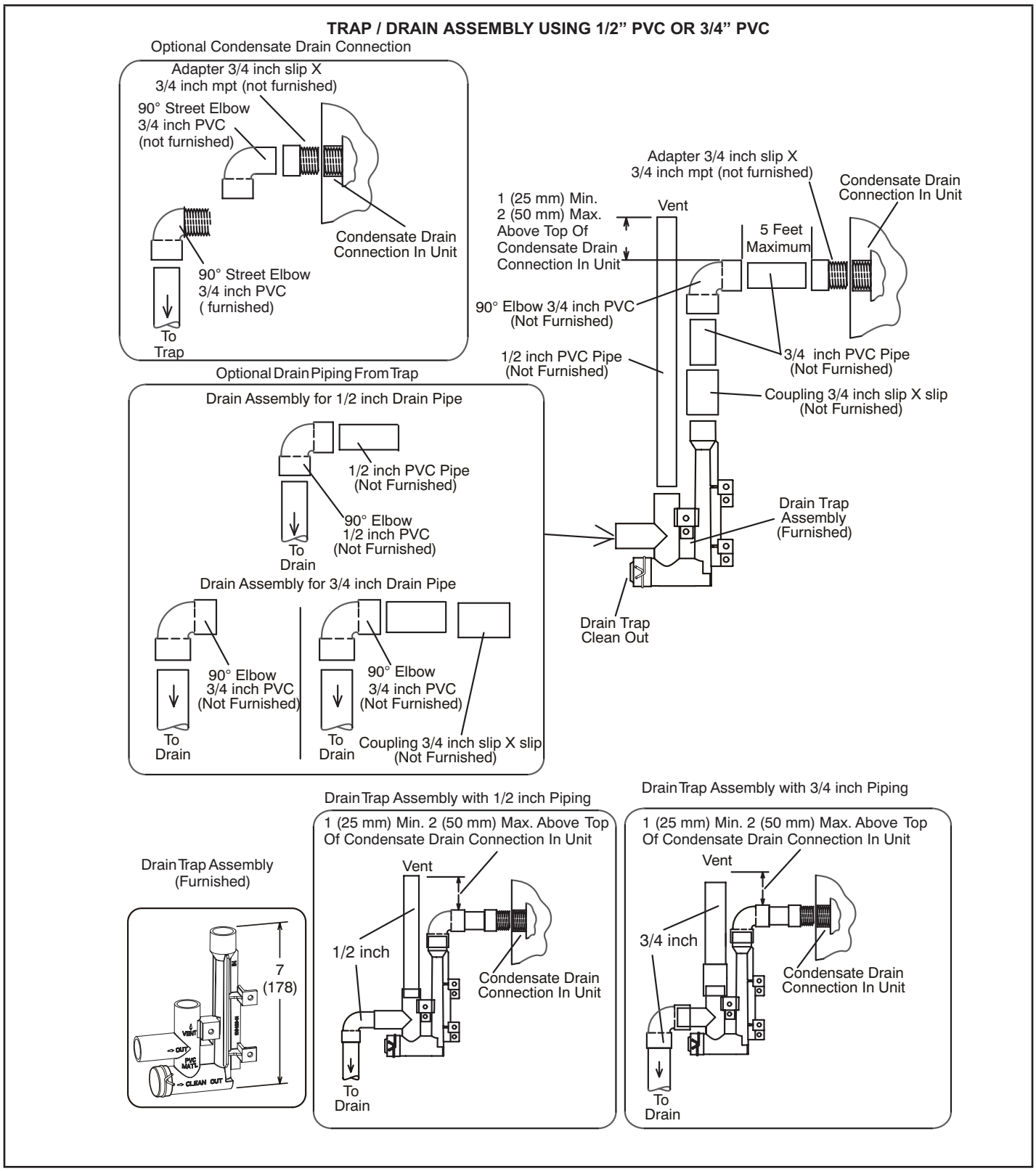
TRAP / DRAIN ASSEMBLY USING 1/2" PVC OR 3/4" PVC
Optional Condensate Drain Connection
Adapter 3/4 inch slip X
3/4 inch mpt (not furnished)
90° Street Elbow
3/4 inch PVC
(not furnished)
Condensate Drain
Connection In Unit
90° Street Elbow
3/4 inch PVC
(furnished)
To
Trap
Adapter 3/4 inch slip X
3/4 inch mpt (not furnished)
Condensate Drain
Connection In Unit
1 (25 mm) Min.
2 (50 mm) Max.
Above Top Of
Condensate Drain
Connection In Unit
Vent
5 Feet
Maximum
90° Elbow 3/4 inch PVC
(Not Furnished)
1/2 inch PVC Pipe
(Not Furnished)
3/4 inch PVC Pipe
(Not Furnished)
Coupling 3/4 inch slip X slip
(Not Furnished)
Optional Drain Piping From Trap
Drain Assembly for 1/2 inch Drain Pipe
1/2 inch PVC Pipe
(Not Furnished)
90° Elbow
1/2 inch PVC
(Not Furnished)
To
Drain
Drain Trap
Assembly
(Furnished)
Drain Assembly for 3/4 inch Drain Pipe
90° Elbow
3/4 inch PVC
(Not Furnished)
To
Drain
90° Elbow
3/4 inch PVC
(Not Furnished)
To
Drain
Coupling 3/4 inch slip X slip
(Not Furnished)
Drain Trap
Clean Out
Drain Trap Assembly
(Furnished)
7
(178)
VENT
OUT
PVC
MATL
CLEAN OUT
Drain Trap Assembly with 1/2 inch Piping
1 (25 mm) Min. 2 (50 mm) Max. Above Top
Of Condensate Drain Connection In Unit
Vent
1/2 inch
Condensate Drain
Connection In Unit
To
Drain
Drain Trap Assembly with 3/4 inch Piping
1 (25 mm) Min. 2 (50 mm) Max. Above Top
Of Condensate Drain Connection In Unit
Vent
3/4 inch
Condensate Drain
Connection In Unit
To
Drain

FIGURE 42

Gas Piping

⚠ CAUTION

If a flexible gas connector is required or allowed by the authority that has jurisdiction, black iron pipe shall be installed at the gas valve and extend outside the furnace cabinet.

⚠ WARNING

Do not over torque (800 in-lbs) or under torque (350 in-lbs) when attaching the gas piping to the gas valve.

1 - Gas piping may be routed into the unit through either the left or right-hand side. Supply piping enters into the gas valve from the side of the valve as shown in FIGURE 44. Connect the gas supply piping into the gas valve. The maximum torque is 800 in lbs and minimum torque is 350 in lbs when when attaching the gas piping to the gas valve.

2 - When connecting gas supply, factors such as length of run, number of fittings and furnace rating must be considered to avoid excessive pressure drop. TABLE 11 lists recommended pipe sizes for typical applications.

NOTE - *Use two wrenches when connecting gas piping to avoid transferring torque to the manifold.*

3 - Gas piping must not run in or through air ducts, clothes chutes, chimneys or gas vents, dumb waiters or elevator shafts. Center gas line through piping hole. Gas line should not touch side of unit. See FIGURE 44.

4 - Piping should be sloped 1/4 inch per 15 feet (6mm per 5.6m) upward toward the gas meter from the furnace. The piping must be supported at proper intervals, every 8 to 10 feet (2.44 to 3.05m), using suitable hangers or straps. Install a drip leg in vertical pipe runs to serve as a trap for sediment or condensate.

5 - A 1/8" N.P.T. plugged tap or pressure post is located on the gas valve to facilitate test gauge connection. See FIGURE 53.

6 - In some localities, codes may require installation of a manual main shut-off valve and union (furnished by installer) external to the unit. Union must be of the ground joint type.

⚠ IMPORTANT

Compounds used on threaded joints of gas piping must be resistant to the actions of liquified petroleum gases.

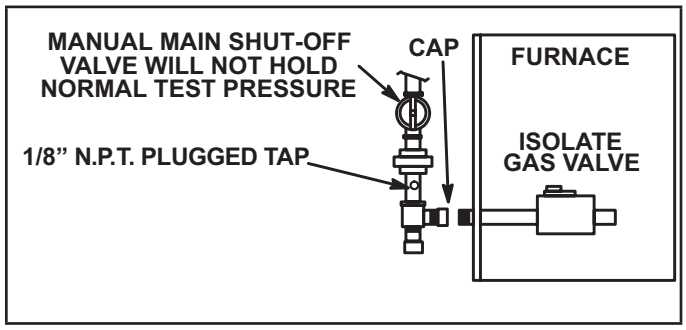

FIGURE 43

Leak Check

After gas piping is completed, carefully check all field-installed piping connections for gas leaks. Use a commercially available leak detecting solution specifically manufactured for leak detection. Never use an open flame to test for gas leaks.

The furnace must be isolated from the gas supply system by closing the individual manual shut-off valve during any gas supply system at pressures greater than or equal to ½ psig. (3.48 kPa, 14 inches w.c.). This furnace and its components are designed, manufactured and independently certified to comply with all applicable ANSI/CSA standards. A leak check of the furnace and its components is not required.

⚠ IMPORTANT

When testing gas lines using pressures in excess of 1/2 psig (3.48 kPa), gas valve must be disconnected and isolated. See FIGURE 43. Gas valves can be damaged if subjected to pressures greater than 1/2 psig (3.48 kPa).

⚠ WARNING

FIRE OR EXPLOSION HAZARD

Failure to follow the safety warnings exactly could result in serious injury, death, or property damage. Never use an open flame to test for gas leaks. Check all connections using a commercially available soap solution made specifically for leak detection. Some soaps used for leak detection are corrosive to certain metals. Carefully rinse piping thoroughly after leak test has been completed.

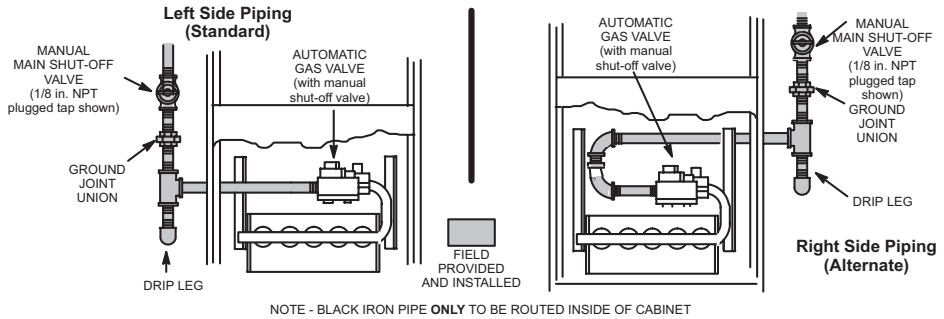

FIGURE 44

TABLE 11

Gas Pipe Capacity - ft3/hr (m3/hr)

Nominal Iron Pipe Size Inches (mm)	Internal Diameter inches (mm)	Length of Pipe - feet (m)									
		10 (3.048)	20 (6.096)	30 (9,144)	40 (12,192)	50 (15.240)	60 (18.288)	70 (21.336)	80 (24.384)	90 (27.432)	100 (30,480)
1/2 (12.7)	.622 (17.799)	172 (4.87)	118 (3.34)	95 (2.69)	81 (2.29)	72 (2.03)	65 (1.84)	60 (1.69)	56 (1.58)	52 (1.47)	50 (1.42)
3/4 (19.05)	.824 (20.930)	360 (10.19)	247 (7.000)	199 (5.63)	170 (4.81)	151 (4.23)	137 (3.87)	126 (3.56)	117 (3.31)	110 (3.11)	104 (2.94)
1 (25.4)	1.049 (26.645)	678 (19.19)	466 (13.19)	374 (10.59)	320 (9.06)	284 (8.04)	257 (7.27)	237 (6.71)	220 (6.23)	207 (5.86)	195 (5.52)
1-1/4 (31.75)	1.380 (35.052)	1350 (38.22)	957 (27.09)	768 (22.25)	657 (18.60)	583 (16.50)	528 (14.95)	486 (13.76)	452 (12.79)	424 (12.00)	400 (11.33)
1-1/2 (38.1)	1.610 (40.894)	2090 (59.18)	1430 (40.49)	1150 (32.56)	985 (27.89)	873 (24.72)	791 (22.39)	728 (20.61)	677 (19.17)	635 (17.98)	600 (17.00)
2 (50.8)	2.067 (52.502)	4020 (113.83)	2760 (78.15)	2220 (62.86)	1900 (53.80)	1680 (47.57)	1520 (43.04)	1400 (39.64)	1300 (36.81)	1220 (34.55)	1160 (32.844)
2-1/2 (63.5)	2.469 (67.713)	6400 (181.22)	4400 (124.59)	3530 (99.95)	3020 (85.51)	2680 (75.88)	2480 (70.22)	2230 (63.14)	2080 (58.89)	1950 (55.22)	1840 (52.10)
3 (76.2)	3.068 (77.927)	11300 (319.98)	7780 (220.30)	6250 (176.98)	5350 (151.49)	4740 (134.22)	4290 (121.47)	3950 (111.85)	3670 (103.92)	3450 (97.69)	3260 (92.31)

NOTE - *Capacity given in cubic feet (m3) of gas per hour and based on 0.60 specific gravity gas.*

Removal of the Furnace from Common Vent

In the event that an existing furnace is removed from a venting system commonly run with separate gas appliances, the venting system is likely to be too large to properly vent the remaining attached appliances.

Conduct the following test while each appliance is operating and the other appliances (which are not operating) remain connected to the common venting system. If the venting system has been installed improperly, you must correct the system as indicated in the general venting requirements section.

⚠ WARNING

CARBON MONOXIDE POISONING HAZARD

Failure to follow the steps outlined below for each appliance connected to the venting system being placed into operation could result in carbon monoxide poisoning or death.

The following steps shall be followed for each appliance connected to the venting system being placed into operation, while all other appliances connected to the venting system are not in operation:

1 - Seal any unused openings in the common venting system.

2 - Inspect the venting system for proper size and horizontal pitch. Determine that there is no blockage, restriction, leakage, corrosion, or other deficiencies which could cause an unsafe condition.

3 - Close all building doors and windows and all doors between the space in which the appliances remaining connected to the common venting system are located and other spaces of the building. Turn on clothes dryers and any appliances not connected to the common venting system. Turn on any exhaust fans, such as range hoods and bathroom exhausts, so they will operate at maximum speed. Do not operate a summer exhaust fan. Close fireplace dampers.

4 - Follow the lighting instructions. Turn on the appliance that is being inspected. Adjust the thermostat so that the appliance operates continuously.

5 - After the main burner has operated for 5 minutes, test for leaks of flue gases at the draft hood relief opening. Use the flame of a match or candle.

6 - After determining that each appliance connected to the common venting system is venting properly, (step 3) return all doors, widows, exhaust fans, fireplace dampers, and any other gas-burning appliances to their previous mode of operation.

7 - If a venting problem is found during any of the preceding tests, the common venting system must be modified to correct the problem. Resize the common venting system to the minimum vent pipe size determined by using the appropriate tables in Appendix G. (These are in the current standards of the National Fuel Gas Code ANSI Z223.1.

Electrical

⚠ IMPORTANT

When matching this gas furnace with zoning, dual fuel or other 24V accessories, It is recommended to replace the factory installed transformer with kit 27J32.

Kit 27J32 contains a 75VA transformer, so you do not overload the original 40VA transformer.

ELECTROSTATIC DISCHARGE (ESD)
Precautions and Procedures

⚠ CAUTION

Electrostatic discharge can affect electronic components. Take precautions to neutralize electrostatic charge by touching your hand and tools to metal prior to handling the control.

⚠ WARNING

Electric Shock Hazard. Can cause injury or death. Unit must be properly grounded in accordance with national and local codes.

⚠ WARNING

Fire Hazard. Use of aluminum wire with this product may result in a fire, causing property damage, severe injury or death. Use copper wire only with this product.

⚠ CAUTION

. Failure to use properly sized wiring and circuit breaker may result in property damage. Size wiring and circuit breaker(s) per Product Specifications bulletin (EHB) and unit rating plate.

EXTERIOR MAKE-UP BOX
(FIELD PROVIDED RIGHT SIDE)

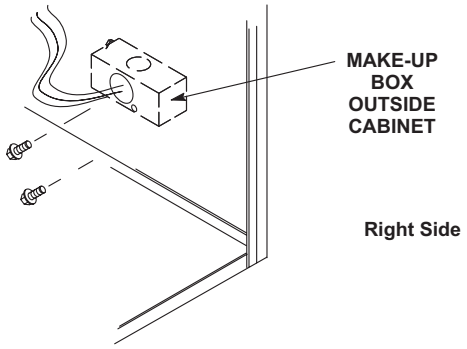

FIGURE 45

The unit is equipped with a make-up box on the left hand side of the cabinet. A field-provided make-up box can be installed on the exterior of the right side of the furnace to facilitate installation. If the make-up box is moved to the right side, clip the wire ties that bundle the wires together and install on the outside of the cabinet. See FIGURE 45. The excess wire must be pulled into the blower compartment. Secure the excess wire to the existing harness to protect it from damage.

See FIGURE 46 and FIGURE 47 for thermostat wiring in communicating applications. TABLE 15 shows DIP switch and on-board link settings for non-communicating thermostat applications.

1 - The power supply wiring must meet Class I restrictions. Protected by either a fuse or circuit breaker, select circuit protection and wire size according to unit nameplate.

NOTE - *Unit nameplate states maximum current draw. See table for maximum over-current protection.*

TABLE 12

SL99PDFK Model	Maximum Over-Current Protection (Amps)
07036B, 09036C, 0904BC	15
09060C, 11060C	20

2 - Holes are on both sides of the furnace cabinet to facilitate wiring.

3 - Install a separate (properly sized) disconnect switch near the furnace so that power can be turned off for servicing.

4 - Before connecting the thermostat or the power wiring, check to make sure the wires will be long enough for servicing at a later date. Remove the blower access panel to check the length of the wire.

5 - Complete the wiring connections to the equipment. Use the provided unit wiring diagram and field wiring diagram shown in FIGURE 48 and TABLE 15. Use 18-gauge wire or larger that is suitable for Class II rating for thermostat connections.

NOTE - *Do NOT make a wire connection between the room thermostat L terminal and the L terminal of the SLP99DFVK integrated control unless this is a communicating thermostat installation with a noncommunicating outdoor unit*.

6 - Electrically ground the unit according to local codes or, in the absence of local codes, according to the current National Electric Code (ANSI/NFPA No. 70) for the USA and current Canadian Electric Code part 1 (CSA standard C22.1) for Canada. A green ground

7 - One line voltage “EAC” 1/4” spade terminal is provided on the furnace integrated control. Any electronic air cleaner rated up to one amp can be connected to this terminal with the neutral leg of the circuit being connected to one of the provided neutral terminals. See FIGURE 49 for location of terminal. This terminal is energized when the indoor blower is operating.

8 - One line voltage “HUM” 1/4” spade terminal is provided on the furnace integrated control. Any humidifier rated up to one amp can be connected to this terminal with the neutral leg of the circuit being connected to one of the provided neutral terminals. See FIGURE 49 for location of terminal. This terminal is energized in the heating mode when the indoor blower is is operating.

9 - One 24V “H” terminal is provided on the furnace integrated control terminal block. Any humidifier rated up to 0.5 amp can be connected to this terminal with the ground leg of the circuit being connected to either ground or the “C” terminal. See FIGURE 49 for location of terminal.

10 - Install the room thermostat according to the instructions provided with the thermostat. See TABLE 15 for thermostat connections. If the furnace is being matched with a heat pump, refer to the instruction packaged with the dual fuel thermostat.

NOTE - *The discharge air temperature sensor is intended to be mounted downstream of the heat exchanger and air conditioning coil. It must be placed in free airflow, where other accessories (humidifiers, UV lights etc.) will not interfere with its accuracy. Wiring distance between the furnace and discharge air sensor should not exceed 10 ft. when wired with 18-gauge thermostat wire.*

TABLE 13

Run Length — Non Communicating

Wire Run Length	AWG#	Insulation/Core Types
Less than 100’ (30m)	18	Color-coded, temperature rating 95ºF (35ºC) minimum, solid core. (Class II rated wiring)
More than 100’ (30m)	16	

TABLE 14

Run Length — Communicating

Wire Run Length	AWG#	Insulation/Core Types
Maximum length of wiring for all connections on the RSBus is limited to 1500 feet (457 meters).	18	Color-coded, temperature rating 95ºF (35ºC) minimum, solid core. (Class II rated wiring)

Thermostat Selection

The SLP99DFVK is designed to operate in a variable rate capacity mode using a two-stage thermostat. The SLP99DFVK will automatically adjust firing rate based upon thermostat cycle times.

A communicating thermostat must be used in communicating applications. Refer to the instructions provided with the thermostat for installation, set-up and operation

For optimal performance in non-communicating applications, Lennox recommends use of a ComfortSense® 7500 high quality electronic digital thermostat or any other with adjustable settings for 1st stage / 2nd stage on / off differentials and adjustable stage timers.

Lennox recommends the following two-stage thermostat set-up for optimal variable rate capacity mode: First heat stage differential set to 1/2 to 1 degree F; second heat stage differential set to 1/2 or 1 degree F; second heat stage upstage timer disabled, or set to maximum (1 hr minimum).

Indoor Blower Speeds

NOTE - When the SLP99DFVK is used with a commincating thermostat, proper indoor blower speed selections are made by the thermostat.

1 - When the thermostat is set to “FAN ON,” the indoor blower will run continuously at a percentage of the second- stage cooling speed when there is no cooling or heating demand. The percentage is set using DIP switches 6 and 7. See TABLE 26 for allowable circulatuion speeds.

2 - When the SLP99DFVK is running in the heating mode, the integrated control will automatically adjust the blower speed to match the furnace firing rate. This speed can be adjusted up or down by 7.5% or 15% using DIP switches 14 through 16 for the low heat speed and 17 through 19 for the high heat speed. See TABLE 26 for allowable heating speeds.

3 - When there is a cooling demand, the indoor blower will run on the cooling speed designated by the positions of DIP switches 8 through 11.

Generator Use - Voltage Requirements

The following requirements must be kept in mind when specifying a generator for use with this equipment:

- The furnace requires 120 volts + 10% (Range: 108 volts to 132 volts).
- The furnace operates at 60 Hz + 5% (Range: 57 Hz to 63 Hz).
- The furnace integrated control requires both polarity and proper ground. Both polarity and proper grounding should be checked before attempting to operate the furnace on either permanent or temporary power.
- Generator should have a wave form distortion of less than 5% THD (total harmonic distortion).

Communicating Enabled Furnace and Non-Communicating Outdoor Unit

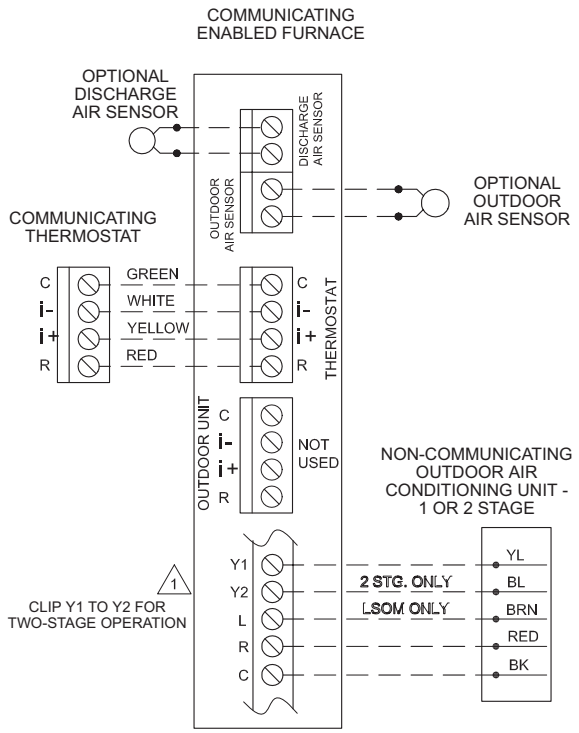

Communicating Enabled Furnace and Communicating Enabled Outdoor Unit

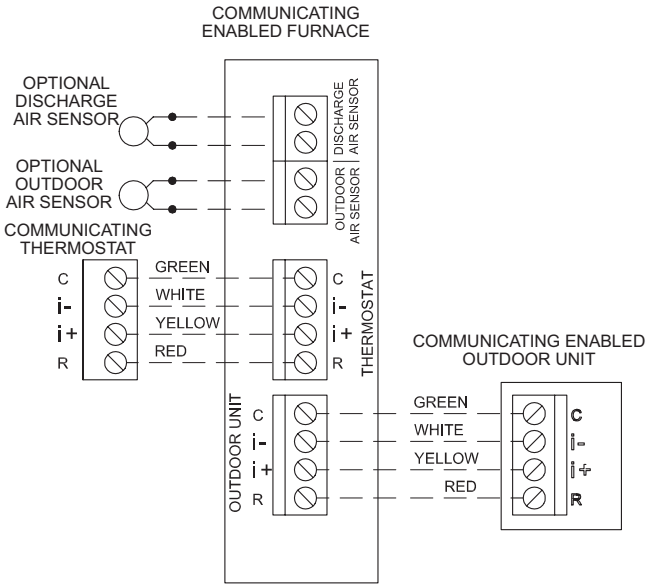

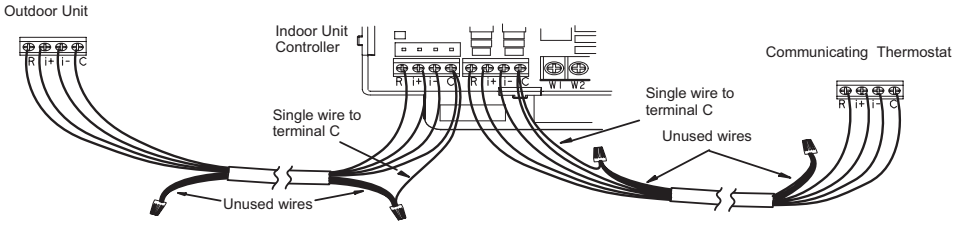

Communicating systems using the a communicating thermostat require four thermostat wires between the thermostat and the furnace/air handler control and four wires between the outdoor unit and the furnace/air handler control. When a thermostat cable with more than four wires is used, the extra wires must be properly connected to avoid electrical noise. The wires must not be left disconnected.

Use wire nuts to bundle the four unused wires at each end of the cable. A single wire should then be connected to the indoor unit end of the wire bundle and attached to the “C” terminals as shown in the diagram above.

FIGURE 46

Optional Accessories for use with any Communicating System

NOTE: THERMOSTAT SENSES HUMIDITY & CONTROLS 24V "H" OUTPUT (& 120V "H" OUTPUT) TO CYCLE HUMIDIFIER BASED ON DEMAND. NO OTHER CONTROL OR HUMIDISTAT REQUIRED.

OPTIONAL OUTDOOR AIR SENSOR FOR USE WITH HUMIDIFIER (IF NOT ALREADY IN THE SYSTEM FOR OTHER FUNCTIONS. BUILT INTO ALL COMMUNICATING OUTDOOR UNITS).

COMMUNICATING ENABLED FURNACE

DISCHARGE AIR SENSOR

COMMUNICATING THERMOSTAT

OUTDOOR AIR SENSOR

DISCHARGE AIR SENSOR

THERMOSTAT

OUTDOOR UNIT

C
i-
i+
R

GREEN
WHITE
YELLOW
RED

48G95 RELAY

HCWP2/ POWER HUMIDIFIER

120VAC

HCWB2/HCWB3 HCWP3 24VAC BYPASS HUMIDIFIER

HRV OR ERV

T10 (N.C.)
T11 (COM)
T12 (N.O.)

HUMIDITROL EDA

PURPLE
RED
BLACK

H
DH
R
C
G

NOTE: 24V UV LIGHT APPLICATIONS

Furnace transformer will not have adequate va to power 24v UV light applications. An additional transformer for UV light applications is required.

FURNACE ONLY

120VAC TERMINALS

HUM

EAC

NEUTRAL

L1
N

120VAC HUMIDIFIER

120VAC HUM OUTPUT IS ENERGIZED ANYTIME HUMIDITY DEMAND IS PRESENT.

OTHER 120VAC AIR CLEANER

120VAC EAC OUTPUT IS ENERGIZED ANYTIME BLOWER IS RUNNING.

COMMUNICATING ENABLED FURNACE

HEPA BYPASS FILTER X2680 HEPA INTERLOCK KIT

CURRENT SENSOR

HEPA CONTROL RELAY

PASS INDOOR BLOWER MOTOR COMMON WIRE THROUGH CURRENT LOOP.

SEE HEPA INTERLOCK KIT FOR INSTALLATION DETAILS

LENNOX COMMUNICATING FURNACE EL296V, SL280V, SL280VN, SL297V, SLP99V cutting DS to R will not cause communication interuption or error code

CUT* R–DS W914

DS

R

COMMUNICATING ENABLED FURNACE

LVCS VENTILATION CONTROL SYSTEM

SEE LVCS VENTILATION INSTRUCTIONS FOR DAMPER & SENSOR WIRING

26L56 CURRENT SENSING RELAY KIT

T
T
D
D
R
C

GH
GS
W

PASS INDOOR BLOWER MOTOR COMMON WIRE THROUGH CURRENT LOOP.

COMMUNICATING ENABLED FURNACE

NON-COMMUNICATING 1 OR 2 STAGE AC OR HP UNIT

(C)

CONDENSATE OVERFLOW SWITCH (disables outdoor unit only)

(C) (YEL)

OTHER OUTDOOR CONNECTIONS REMAIN THE SAME, REFER TO SPECIFIC DIAGRAM

FIGURE 47

TABLE 15

Field Wiring Connections for Non-Communicating Thermostat Applications

Thermostat	DIP Switch Settings and On-Board Links / Jumper				Wiring Connections
	DIP Switch 1	Jumper (Y1 to Y2) Two-Stage Cooling	W914 (DS to R) Dehumidification or Harmony III™	W951 (O to R) Heat Pumps	
1Heat / 1 Cool *NOTE - Use DIP switch 3 to set second-stage heat ON delay. OFF-7 minutes. ON-12 minutes.*	ON	Intact	Intact	Intact	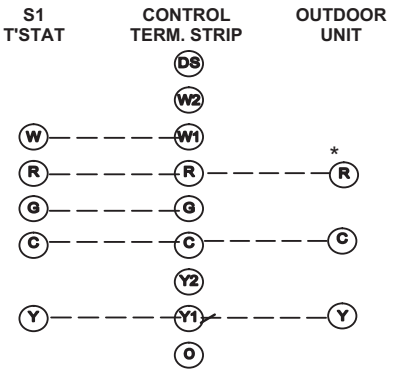
1 Heat / 2 Cool *NOTE - Use DIP switch 3 to set second-stage heat ON delay. OFF-7 minutes. ON-12 minutes.*	ON	Cut	Intact	Intact	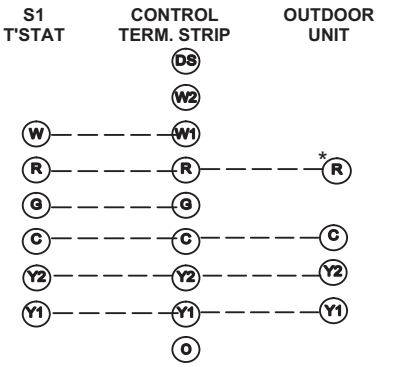
1 Heat / 2 Cool with t'stat with dehumidification mode *NOTE - Use DIP switch 3 to set second-stage heat ON delay. OFF-7 minutes. ON-12 minutes.*	ON	Cut	Cut	Intact	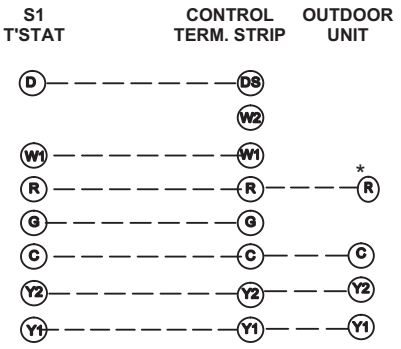

* *"R" required on some units.*

TABLE 15

Field Wiring Connections for Non-Communicating Thermostat Applications (Continued)

Thermostat	DIP Switch Settings and On-Board Links / Jumper				Wiring Connections
	DIP Switch 1	Jumper (Y1 to Y2) Two-Stage Cooling	W914 (DS to R) Dehumidification or Harmony III™	W951 (O to R) Heat Pumps	
2 Heat / 2 Cool	OFF	Cut	Intact	Intact	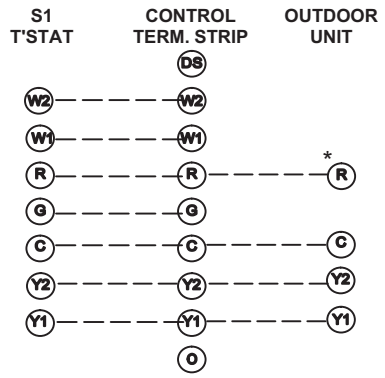
2 Heat / 2 Cool with t'stat with dehumidification mode	OFF	Cut	Cut	Intact	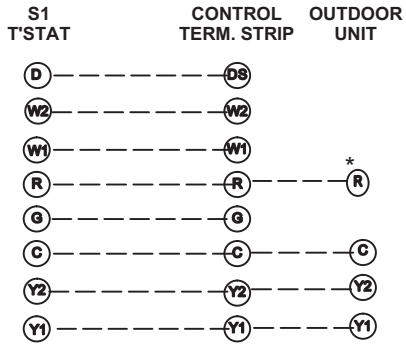
2 Heat / 1 Cool	OFF	Intact	Intact	Intact	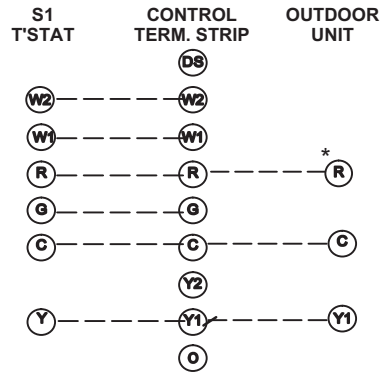

* *"R" required on some units.*

TABLE 15

Field Wiring Connections for Non-Communicating Thermostat Applications (Contiued)

Thermostat	DIP Switch Settings and On-Board Links / Jumper				Wiring Connections
	DIP Switch	Jumper (Y1 to Y2) Two-Stage Cooling	W914 (DS to R) Dehumidification or Harmony III™	W951 (O to R) Heat Pumps	
Dual Fuel Single-Stage Heat Pump ComfortSense® 7000 L7742U thermostat w/ dual fuel capabilities Capable of 2-stage gas heat control	DIP Switch 1 OFF	Intact	Intact	Cut	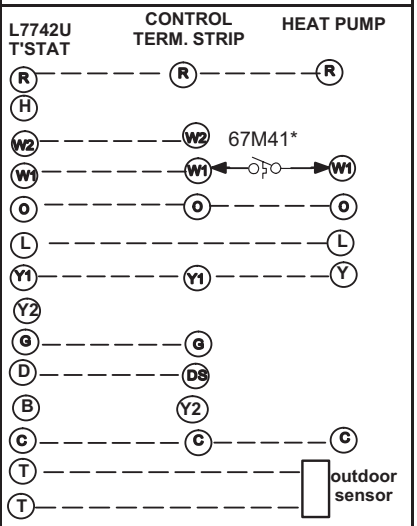
Dual Fuel Two Stage Heat Pump ComfortSense® 7000 L7742U thermostat w/ dual fuel capabilities Capable of 2-stage gas heat control	DIP Switch 1 OFF	Cut	Intact	Cut	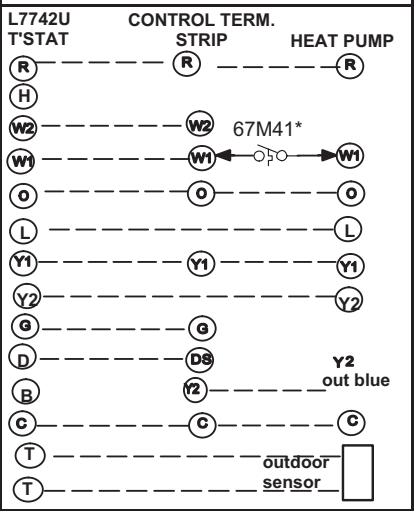

** Connect W1 to W1 ONLY if using defrost tempering kit 67M41.*

*NOTE - **Do NOT** make a wire connection between the room thermostat L terminal and the L terminal of the integrated control.*

SLP99DFVK DIAGRAM

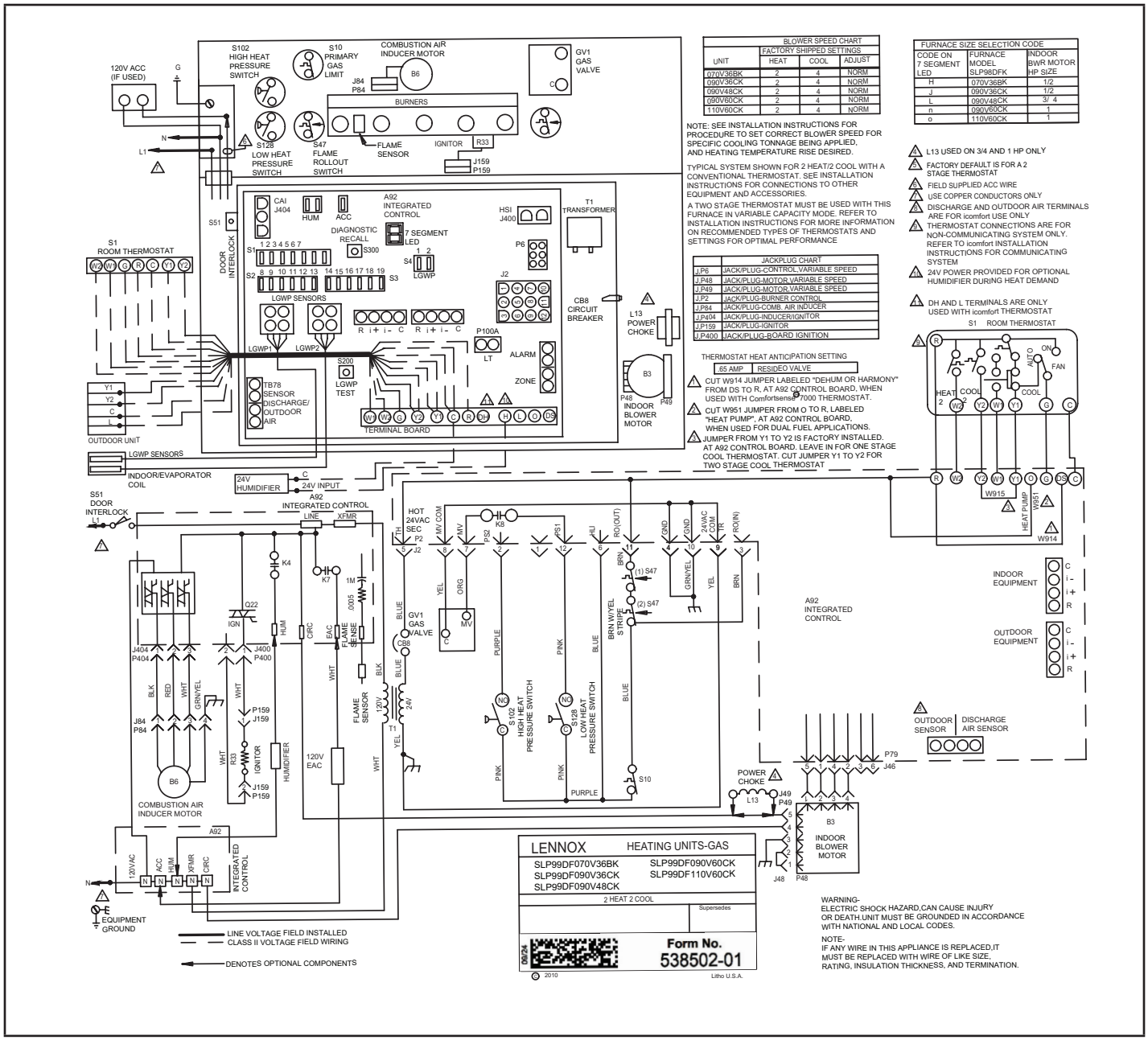

BLOWER SPEED CHART			
	FACTORY SHIPPED SETTINGS		
UNIT	HEAT	COOL	ADJUST
070V36BK	2	4	NORM
090V36CK	2	4	NORM
090V48CK	2	4	NORM
090V60CK	2	4	NORM
110V60CK	2	4	NORM

NOTE: SEE INSTALLATION INSTRUCTIONS FOR PROCEDURE TO SET CORRECT BLOWER SPEED FOR SPECIFIC COOLING TONNAGE BEING APPLIED, AND HEATING TEMPERATURE RISE DESIRED.

TYPICAL SYSTEM SHOWN FOR 2 HEAT/2 COOL WITH A CONVENTIONAL THERMOSTAT. SEE INSTALLATION INSTRUCTIONS FOR CONNECTIONS TO OTHER EQUIPMENT AND ACCESSORIES.

A TWO STAGE THERMOSTAT MUST BE USED WITH THIS FURNACE IN VARIABLE CAPACITY MODE. REFER TO INSTALLATION INSTRUCTIONS FOR MORE INFORMATION ON RECOMMENDED TYPES OF THERMOSTATS AND SETTINGS FOR OPTIMAL PERFORMANCE

JACKPLUG CHART	
J.P6	JACK/PLUG-CONTROL,VARIABLE SPEED
J.P48	JACK/PLUG-MOTOR,VARIABLE SPEED
J.P49	JACK/PLUG-MOTOR,VARIABLE SPEED
J.P2	JACK/PLUG-BURNER CONTROL
J.P84	JACK/PLUG-COMB. AIR INDUCER
J.P404	JACK/PLUG-INDUCER/IGNITOR
J.P159	JACK/PLUG-IGNITOR
J.P400	JACK/PLUG-BOARD IGNITION

THERMOSTAT HEAT ANTICIPATION SETTING	
.65 AMP	RESIDEO VALVE

1. CUT W914 JUMPER LABELED "DEHUM OR HARMONY" FROM DS TO R, AT A92 CONTROL BOARD, WHEN USED WITH Comfortsense 7000 THERMOSTAT.
2. CUT W951 JUMPER FROM O TO R, LABELED "HEAT PUMP", AT A92 CONTROL BOARD, WHEN USED FOR DUAL FUEL APPLICATIONS.
3. JUMPER FROM Y1 TO Y2 IS FACTORY INSTALLED. AT A92 CONTROL BOARD. LEAVE IN FOR ONE STAGE COOL THERMOSTAT. CUT JUMPER Y1 TO Y2 FOR TWO STAGE COOL THERMOSTAT

FURNACE SIZE SELECTION CODE		
CODE ON 7 SEGMENT LED	FURNACE MODEL SLP98DFK	INDOOR BWR MOTOR HP SIZE
H	070V36BK	1/2
J	090V36CK	1/2
L	090V48CK	3/ 4
n	090V60CK	1
o	110V60CK	1

1. L13 USED ON 3/4 AND 1 HP ONLY
2. FACTORY DEFAULT IS FOR A 2 STAGE THERMOSTAT
3. FIELD SUPPLIED ACC WIRE
4. USE COPPER CONDUCTORS ONLY
5. DISCHARGE AND OUTDOOR AIR TERMINALS ARE FOR icomfort USE ONLY
6. THERMOSTAT CONNECTIONS ARE FOR NON-COMMUNICATING SYSTEM ONLY. REFER TO icomfort INSTALLATION INSTRUCTIONS FOR COMMUNICATING SYSTEM
7. 24V POWER PROVIDED FOR OPTIONAL HUMIDIFIER DURING HEAT DEMAND
8. DH AND L TERMINALS ARE ONLY USED WITH icomfort THERMOSTAT

FIGURE 48

Modulating, Variable Speed and Communicating
107901-01

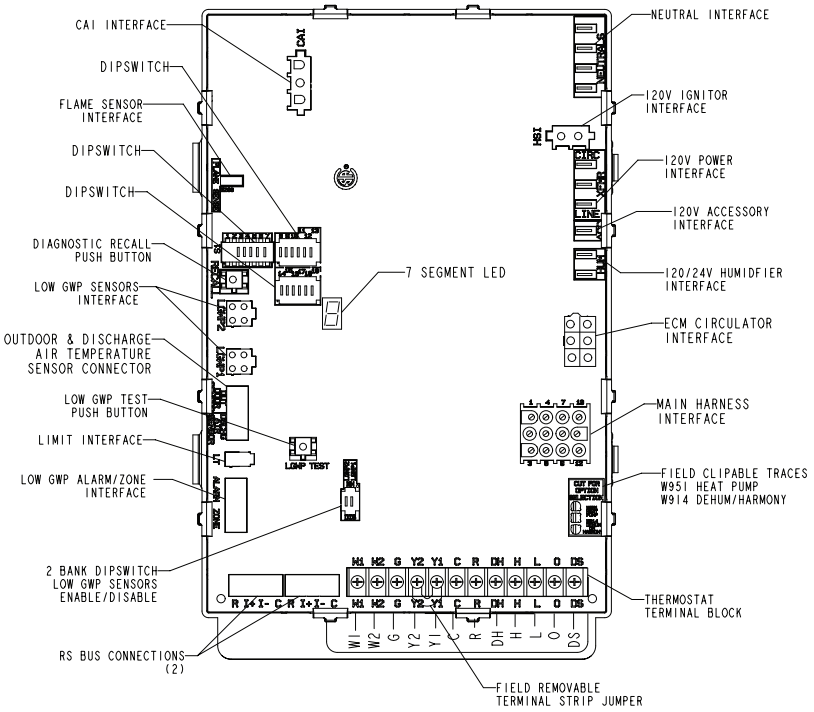

FIGURE 49

TABLE 16

THERMOSTAT INPUT TERMINALS	
W1	LOW STAGE HEAT
W2	HIGH STAGE HEAT
G	FAN
Y1	LOW STAGE COOL
Y2	HIGH STAGE COOL24
C	THERMOSTAT COMMON / GROUND
R	24VAC POWER TO THE THERMOSTAT
DH	DEHUMIDFICATION (COMM ONLY)
H	24V HUMIDIFIER OUTPUT
L	LSOM (COMM ONLY)
O	HEAT PUMP REVERSING VALVE
DS	DEHUMIDIFICATION (NON-COMM ONLY)

TABLE 17

LOW GWP INTERFACE	
LGWP1	LOW GWP SENSOR #1 INTERFACE
LGWP2	LOW GWP SENSOR # 2 INTERFACE
ALARM	INTERFACE TO LOW GWP LEAK AUDIBLE ALARM (DRY CONTACT)
ZONE	INTERFACE TO ZONING CONTROL FOR LOW GWP APPLICATIONS
LGWP TEST	PUSH BUTTONTO TEST LOW GWP FUNCTIONALITY

TABLE 18

1/4”QUICK CONNECT TERMINALS	
HUM	120 VAC OUTPUT TO HUMIDIFIER
XMFR	120 VAC OUTPUT TO TRANSFORMER
L1	120 VAC INPUT TO CONTROL
CIRC	120 VAC OUTPUT TO CIRCULATING BLLOWER
EAC	120 VAC TO ELECTRCAL AIR CLEANER
NEUTRALS	120 VAC NEUTRAL

RS - BUS OUTDOOR	
R	24VAC
1+	DATA HIGH CONNECTION
1-	DATA LOW CONNECTION
C	24VAXC COMMON
RS - BUS INDOOR	
R	24VAC
1+	DATA HIGH CONNECTION
1-	DATA LOW CONNECTION
C	24VAXC COMMON

Ignition Control Diagnostic Codes

CODE	DIAGNOSTIC CODES/STATUS OF FURNACE
.	Idle mode (Decimal blinks at 1 Hertz -- 0.5 second ON, 0.5 second OFF).
A	Cubic feet per minute(cfm) setting for indoor blower (1 second ON, 0.5 second OFF) / cfm setting for current mode displayed.
C	Cooling stage (1 sec. ON, 0.5 sec. OFF) 1 or 2 displayed / Pause / cfm setting displayed / Pause / Repeat codes.
d	Dehumidification mode (1 second ON, 1 second OFF) CFM setting displayed / Pause/ Repeat Codes.
h	Variable Capacity Heat (1 second ON, 0.5 second OFF) % of input rate / Pause / CFM / Pause / Repeat codes.
H	Heat Stage (1 second ON, 0.5 second OFF) 1 or 2 displayed / Pause/ cfm setting displayed / Pause / Repeat codes.
dF	Defrost mode.
E 105	Device communication problem - No other devices on BUS (Communication system).
E 110	Low line voltage.
E111	Line Voltage Polarity Reversed
E 113	High line voltage.
E 114	Line voltage frequency out-of-range.
E 115	Low 24V - Control will restart if the error recovers.
E 120	Unresponsive Device.
E 124	Active communicating thermostat signal missing for more than 3 minutes.
E 125	Control failed self-check, internal error, failed hardware. Will restart if error recovers. Integrated Furnace Control not communicating. Covers hardware errors like flame sense circuit faults, pin shorts, etc.
E 126	Failed internal control communication between microcontrollers.
E 131	Corrupted control parameters (Verify configuration of system).
E 150	Refrigerant leak detected
E 151	Refrigerant Leak Detector Sensor #1 Fault
E 152	Refrigerant Leak Detector Sensor #2 Fault
E 154	Refrigerant Leak Detector Sensor #1 Comm. Lost or invalid sensor dip switch configuration (ON/OFF)
E 155	Refrigerant Leak Detector Sensor #2 Comm. Lost
E 160	Refrigerant Leak Detector Sensor #1 Type Incorrect
E 161	Refrigerant Leak Detector Sensor #2 Type Incorrect
E 163	Refrigerant Leak Detector Control Failure
E164	Low GWP test
E 180	Outdoor air sensor failure - NO error if disconnected. Only shown if shorted or out-of-range.
E 200	Hard lockout - Rollout circuit open or previously open.
E 201	Indoor blower communication failure - Unable to communicate with blower motor.
E 202	Indoor blower motor mis-match - Indoor motor horsepower does not match unit capacity.
E 203	Appliance capacity / size is NOT programed. Invalid unit codes Refer to configuration flow chart installation instructions.
E 204	Gas valve mis-wired.
E 205	Control gas valve relay contact shorted.
E 207	Hot surface ignitor sensed open - Refer to troubleshooting in installation instruction.
E 223	Low pressure switch failed open - Refer to troubleshooting in installation instruction.
E 224	Low pressure switch failed closed - Refer to troubleshooting in installation instruction.
E 225	High pressure switch failed open - Refer to troubleshooting in installation instruction.
E 226	High pressure switch failed closed - Refer to troubleshooting in installation instruction.
E 227	Low pressure switch opened during trial for ignition or run mode - Refer to troubleshooting in installation instruction.
E 228	Unable to perform successful pressure switch calibration.
E 240	Low flame current - Run mode - Refer to troubleshooting in installation instruction.
E 241	Flame sensed out of sequence - Flame still present.
E 250	Limit switch circuit open - Refer to troubleshooting in installation instruction.
E 252	Discharge air temperature too high (gas heat only).
E 270	Soft lockout - Exceeded maximum number of retries. No flame current sensed.
E 271	Soft lockout - Exceeded maximum number of retries. Last retry failed due to pressure switch opening.
E 272	Soft lockout - Exceeded maximum number of recycles. Last recycle failed due to pressure switch opening.
E 273	Soft lockout - Exceeded maximum number of recycles. Last recycle failed due to a flame failure.
E 274	Soft lockout - Exceeded maximum number of recycles. Last recycle failed due to the limit circuit opening or the limit remained open longer than 3 minutes.
E 275	Soft lockout - Flame sensed out of sequence from code 241 fault. Flame signal is gone.
E 276	Soft lockout - Exceeded maximum number of calibration retries.
E 290	Ignitor circuit fault - Failed ignitor or triggering circuitry.
E 291	Restricted air flow - Cubic feet per minute is lower than what is needed for minimum firing rate.
E 292	Indoor blower motor unable to start - Seized bearings, stuck wheel, etc.
E 294	Combustion air inducer motor amp draw too high.
E 295	Indoor blower motor temperature is too high.
E 310	Discharge error sensor failure - No error if disconnected. Only shown if shorted or out of range.
E 311	Heat rate reduced to match indoor blower air flow. Replace filter or repair duct restriction.
E 312	Restricted air flow in cooling or continuous fan mode is lower than air flow settings.
E 313	Indoor or outdoor unit capacity mis-match.
E 331	Global network connection - Communication link problem.
E 347	No 24 Volt output on Y1 to C with non-communicating outdoor unit.
E 348	No 24 Volt output on Y2 to C with non-communicating outdoor unit.
E 349	No 24 Volts between R & O with non-communicating outdoor unit (Dual fuel module required for heat pump application).
E 370	Interlock Switch Sensed Open
E 390	Low GWP Relay Stuck

LED Segment Status / Error Code

Press the diagnostic push button and hold it to cycle through a menu of options. Every five seconds a new menu item will be displayed.

Release the button when the desired mode is displayed.

When a solid ”P” is displayed, the furnace capacity/ size is programmed.

When the solid “E” is displayed, the control enters the Error Code Recall mode. Error Code Recall mode menu options: No change (displaying error history) remains in Error Code Recall mode; solid “b” exits Error Code Recall mode; and solid “c” clears the error history. Must press button while flashing “c” is displayed to clear error codes.

When the solid “-” is displayed, the control enters the Field Test mode. Field Test mode menu options: Solid “C” starts pressure switch calibration; blinking “-” exits Field Test mode.

Code	Diagnostic Codes/Status of Equipment	Action Required to Clear and Recover
.	Idle mode (Decimal blinks at 1 Hertz -- 0.5 second ON, 0.5 second OFF).	
A	Cubic feet per minute (cfm) setting for indoor blower (1 second ON, 0.5 second OFF) / cfm setting for current mode displayed.	
C	Cooling stage (1 second ON, 0.5 second OFF) / 1 or 2 displayed / Pause / cfm setting displayed / Pause / Repeat codes).	
d	Cooling stage (1 second ON, 0.5 second OFF) / 1 or 2 displayed / Pause / cfm setting displayed / Pause / Repeat codes).	
h	Variable Capacity Heat (1 second ON, 0.5 second OFF) / % of input rate displayed / Pause/ cfm setting / Pause/ Repeat codes.	
H	Heat Stage (1 second ON, 0.5 second OFF) / 1 or 2 displayed / Pause / cfm setting displayed / Pause / Repeat codes.	
df	Defrost mode.	
U	Discharge air temperature	
- -	Soft disable - Soft disabling is when thermostat finds a device on the BUS that it does not recognize and the thermostat sends a the device a message to be in soft disabling mode until properly configured. Two horizontal bars will display.	Steps to follow if the damper control module is displaying the soft disable code. Confirm proper wiring between all devices (thermostat, damper control module, indoor and outdoor). Cycle power to the control that is displaying the soft disable code. Put the room thermostat through set up. Go to setup / system devices / thermostat / edit / then push reset. Go to setup / system devices / thermostat / edit / then push resetAll.
E105	Device communication problem - No other devices on BUS (Communication system).	Equipment is unable to communicate. Check for mis wire and loose connections and check for a high voltage source of noise close to the system. (welder etc.).
E110	Low line voltage.	Line Voltage low (Voltage lower than nameplate rating) Check voltage.
E113	High line voltage.	Line Voltage High (Voltage higher than nameplate rating) Check voltage.
E114	Line voltage frequency out-of-range.	No 60 hertz power (Check voltage and frequency).
E115	Low 24V - Control will restart if the error recovers.	24 voltage low (Range is 18 to 30 volts) Check voltage.
E120	Unresponsive device.	Usually caused by delay in outdoor unit responding to indoor unit poling recycle power, check wiring.
E124	Active communicating thermostat signal missing for more than 3 minutes.	Equipment lost communication with the thermostat. Check connections and cycle power on the thermostat.
E125	Control failed self-check, internal error, failed hardware. Will restart if error recovers. Integrated furnace control not communicating. Covers hardware errors (flame sense circuit faults, pin shorts, etc.).	Hardware problem on the control board. Cycle power on control. Replace if problem prevents service and is persistent.
E126	Failed internal control communication between microcontrollers.	Hardware problem on the control board. Cycle power on control. Replace if problem prevents service and is persistent.
E180	Outdoor air sensor failure - NO error if disconnected. Only shown if shorted or out-of-range.	

Integrated Control Diagnostic Codes (Continued)

Code	Diagnostic Codes/Status of Equipment	Action Required to Clear and Recover
E200	Hard lockout - Rollout circuit open or previously open.	Correct unit cause of rollout trip or replace flame rollout switch and test furnace operation.
E201	Indoor blower communication failure - Unable to communicate with blower motor.	Indoor blower communication failure including power outage.
E202	Indoor blower motor mis-match - Indoor motor horsepower does not match unit capacity.	Incorrect furnace size code selected. Check unit size codes on configuration guide or in installation instructions.
E203	Appliance capacity / size is NOT programmed. Invalid unit codes refer to configuration flow chart in installation instructions.	No furnace size code selected. Check unit size codes on configuration guide or in installation instructions.
E204	Gas valve mis-wired.	Check operation of gas valve.
E205	Gas valve control relay contact shorted.	Check operation of gas valve.
E207	Hot surface ignitor sensed open - Refer to troubleshooting in installation instruction.	Measure resistance of Hot Surface Ignitor, replace if open or not within specification.
E223	Low pressure switch failed open - Refer to troubleshooting in installation instruction.	Check inches of water column pressure during operation of low pressure switch on heat call, measure inches of water column of operating pressure, inspect vent and combustion air inducer for correct operation and restriction.
E224	Low pressure switch failed closed - Refer to troubleshooting in installation instruction.	Check low pressure switch for closed contacts, measure inches of water column of operating pressure, inspect vent and combustion air inducer for correct operation and restriction.
E225	High pressure switch failed open - Refer to troubleshooting in installation instruction.	Check inches of water column pressure of high pressure switch on heat call, measure inches of water column of operating pressure, inspect vent and combustion air inducer for correct operation and restriction.
E226	High pressure switch failed closed - Refer to troubleshooting in installation instruction.	Check high pressure switch for closed contacts, measure inches of water column of operating pressure, inspect vent and combustion air inducer for correct operation and restriction.
E227	Low pressure switch open during trial for ignition or run mode. Refer to troubleshooting in installation instruction.	Check inches of water column pressure during operation of low pressure switch on heat call, measure inches of water column of operating pressure, inspect vent and combustion air inducer for correct operation and restriction.
E228	Unable to perform successful pressure switch calibration.	Retry after 300 seconds. Error counter cleared when exiting lockout, unable to perform pressure switch calibration. Check vent system and pressure switch wiring connections.
E240	Low flame current - Run mode - Refer to troubleshooting in installation instruction.	Check micro amperes of flame sensor, clean or replace sensor. Measure voltage of neutral to ground for good unit ground.
E241	Flame sensed out of sequence - Flame still present.	Shut off gas, check for gas valve leak.
E250	Limit switch circuit open - Refer to troubleshooting in installation instruction.	Check why limit is tripping, overfired, low air flow.
E252	Discharge air temperature too high (gas heat only).	Check temperature rise, air flow and input rate.
E270	Soft lockout - Exceeded maximum number of retries. No flame current sensed.	Check for gas flow, ignitor lighting burner, flame sensor current.
E271	Soft lockout - Exceeded maximum number of retries. Last retry failed due to the pressure switch opening.	See E 223.
E272	Soft lockout - Exceeded maximum number of recycles. Last recycle due to the pressure switch opening.	See E 223 and E 225.
E273	Soft lockout - Exceeded maximum number of recycles. Last recycle due to flame failure.	See E 240.

Integrated Control Diagnostic Codes (Continued)

Code	Diagnostic Codes/Status of Equipment	Action Required to Clear and Recover
E274	Soft lockout - Exceeded maximum number of recycles. Last recycle failed due to the limit circuit opening or limit remained open longer than 3 minutes.	See E 250.
E275	Soft lockout - Flame sensed out of sequence from code 241 fault. Flame signal is gone.	See E 241.
E276	Soft lockout - Exceeded maximum number of calibration retries.	See E 228.
E290	Ignitor circuit fault - Failed ignitor or triggering circuitry.	See E 207.
E291	Restricted air flow - Cubic feet per minute is lower than what is needed for minimum firing rate.	Check for dirty filter, unit air flow restriction, blower performance.
E292	Indoor blower motor unable to start - Seized bearings, stuck wheel, etc.	Indoor blower motor unable to start (seized bearing, stuck wheel, etc), replace motor or wheel if assembly does not operate or meet performance.
E294	Combustion air inducer motor amp draw is too high.	Check combustion blower bearings, wiring , amperes, replace if it does not operate or meet performance.
E295	Indoor blower motor temperature is too high.	Indoor blower motor over temperature (motor tripped on internal protector), Check motor bearings, amperes. Replace if necessary.
E310	Discharge error sensor failure - No error if disconnected. Only shown if shorted or out-of-range.	Discharge air temperature(DATS) out of range, code is activated during ”Field test mode”.
E311	Heat rate reduced to match indoor blower air flow. Replace filter or repair duct restriction.	Furnace blower in cutback mode due to restricted airflow. Check filter and ductwork. To clear replace filter if needed or repair/ add ductwork.
E312	Restricted air flow in cooling or continuous fan mode is lower than cfm setting.	Restricted airflow - Indoor blower is running at a reduced cubic feet per minute (Cutback Mode) - The variable speed motor has pre-set speed and torque limiters to protect the motor from damage caused by operating out of its designed parameters (0 to 0.8 inches water column total external static pressure). Check filter and ductwork. To clear replace filter if needed or repair/ add ductwork.
E313	Indoor or outdoor unit capacity mismatch.	Incorrect Indoor /outdoor capacity code selected. Check for proper configuration in installation instructions. Alarm is just a warning. The system operation is not impacted at all and alarm would clear when Commissioning is exited.
E331	Global network connection - Communication link problem.	For Future Use.
E347	No 24 Volt output on Y1 to C with non-communicating outdoor unit.	Y1 relay / Stage 1 failed (Pilot relay contacts did not close or the relay coil did not energize).
E348	No 24 Volt output on Y2 to C with non-communicating outdoor unit.	Y2 relay / Stage 2 failed (Pilot relay contacts did not close or the relay coil did not energize).
E349	No 24 Volts between R & O with non-communicating outdoor unit (Dual fuel module required for heat pump application).	Only applicable in non-communicating mode. The O to R link on the furnace has been cut and could possibly cause a brown out. Might also result in low voltage to which would generate alert code as well. Configuration link R to O needs to be restored. Will need to restore link by hard-wiring the R to O terminals on the terminal strip.

Integrated Control Diagnostic Codes LOW GWP

Code	Diagnostic Codes / Status of Equipment	Action Reqiured to Clear and Recover
E150	Refrigerant Leak detected	This may indicate the presence of a leak at or in the indoor unit coil of the equipment, that will need to be repaired for proper and safe system operation. Additionally, it may indicate that proper refrigerant charge will need to be verified. This fault cannot be cleared while the refrigerant detection system sensor is reporting the presence of a leak
E151	Refrigerant Leak Detector Sensor #1 fault	The refrigerant detection sensor #1 in the unit is reporting an issue that prevents it from functioning properly, and replacement of the sensor may be necessary. This fault clears when the sensor no longer reports the presence of a fault condition.
E152	Refrigerant Leak Detector Sensor #2 fault	The refrigerant detection sensor #2 in the unit is reporting an issue that prevents it from functioning properly, and replacement of the sensor may be necessary. This fault clears when the sensor no longer reports the presence of a fault condition.
E154	Refrigerant Leak Detector Sensor #1 Communication lost or invalid sensor dip switch configuration (ON/OFF)	There may be an issue with the wiring harness connecting the sensor #1 to the furnace control board, either with the wiring itself or with the connector. Check the wiring and the connector for damage or improper connectivity. Check the sensor for damage or obstruction on the harness plug. This fault clears when communications with the sensor has been reestablished, but blower latches for a minimum of 5 minutes. Retest of the presence of fault can be effected by pressing the Low GWP test button on the furnace unit control board. This may also indicate incorrect Low GWP dip switch settings. Please refer to installation instructions.
E155	Refrigerant Leak Detector Sensor #2 Communication lost	There may be an issue with the wiring harness connecting the sensor #2 to the furnace control board, either with the wiring itself or with the connector. Check the wiring and the connector for damage or improper connectivity. Check the sensor for damage or obstruction on the harness plug. This fault clears when communications with the sensor has been reestablished, but blower latches for a minimum of 5 minutes. Retest of the presence of fault can be effected by pressing the Low GWP test button on the furnace unit control board
E160	Refrigerant Leak Detector Sensor #1 type incorrect	The sensor #1 is of a type not suitable for use in the application. Replace the sensor with a Lennox approved replacement part. This fault clears when a sensor suitable for the application is detected by the furnace control board, but blower will latch for a minimum of 5 minutes. Retest of the presence of the fault can be effected by pressing the Low GWP test button on the furnace unit control board.
E161	Refrigerant Leak Detector Sensor #2 type incorrect	The sensor #2 is of a type not suitable for use in the application. Replace the sensor with a Lennox approved replacement part. This fault clears when a sensor suitable for the application is detected by the furnace control board, but blower will latch for a minimum of 5 minutes. Retest of the presence of the fault can be effected by pressing the Low GWP test button on the furnace unit control board.
E163	Furnace Control Board Failure	There is an issue with the furnace control board, preventing the furnace from operating properly. This may require the replacement of the indoor unit control board. This fault clears when the furnace controller operates normally.
E164	Low GWP Test	Low GWP Test mode activates by manually engaging Low GWP test button. Normal operations resumes and code clears automatically after 1-minute
E390	Low GWP Relay Stuck	his indicates an issue with the Low GWP relay in the furnace control. This may require the replacement of the indoor unit control board. This fault clears when the relay operates normally.

TABLE 19

Non-Communicating Thermostat Selection Switch Settings

Operation	Thermostat	Switch 1	Switch 2	Switch 3
Variable Capacity Heat (35% to 100%)	Two-Stage	Off	On	Off
Three-Stage Heat (35%, 70%, 100%)	Single-Stage	On	Off	2nd stage delay OFF = 7 minutes ON = 12 minutes 3rd stage delay 10 minutes fixed
Two-Stage Heat (W1 70%, W2 100%)	Two-Stage	Off	Off	Off

NOTE - *When the SLP99DFVK is used with a communicating thermostat, all indoor blower speed selections and DIP switch settings are made by the communicating thermostat.*

SLP99DFVK units are equipped with an integrated control. This control manages ignition timing, combustion air inducer speed, heating mode fan off delays and indoor blower speeds based on selections made using the control DIP switches and on-board links. The control includes an internal Watchguard feature which automatically resets the ignition control when it has been locked out.

NOTE - *All DIP switches are factory shipped in the "OFF" position.*

Heating Operation DIP Switch Settings -- Figure 47
Switch 1 -- Thermostat Selection -- This unit may be used with either a single-stage or two-stage thermostat.\ The thermostat selection is made using a DIP switch which must be properly positioned for the particular application. The DIP switch is factory-positioned for use with a twostage thermostat. If a single-stage thermostat is to be used, the DIP switch must be repositioned. See TABLE 19.

Switch 2 -- Operating Mode with Two-Stage Thermostat -- If a two-stage thermostat is used, the furnace can operate in either variable-capacity or conventional twostage mode. When variable-capacity mode is selected, the firing rate of the unit is varied to maximize comfort. Conventional two-stage mode is the factory default setting. See TABLE 19.

Switch 3 -- Second-Stage Heat On Delay -- If a single-stage thermostat is used, the integrated control can be used to energize second-stage heat after either 7 minutes or 12 minutes of first-stage heat operation. See TABLE 19.

Switches 4 and 5 -- Blower-Off Delay -- The blower-on delay of 45 seconds is not adjustable.The blower-off delay (time that the blower operates after the heating demand has been satisfied) can be adjusted by moving switches 4 and 5 on the integrated control. The unit is shipped from the factory with a blower-off delay of 120 seconds

The blower off delay affects comfort and is adjustable to satisfy individual applications. Adjust the blower off delay to achieve a supply air temperature between 90° and 110°F at the exact moment that the blower is de-energized. Longer off delay settings provide lower supply air temperatures; shorter settings provide higher supply air temperatures. TABLE 20 provides the blower off timings that will result from different switch settings.

TABLE 20

Blower-Off Delay Switch Settings

Blower-Off Delay (Seconds)	Switch 4	Switch 5
90	Off	On
120 (factory)	Off	Off
180	On	Off
210	On	On

Indoor Blower Operation DIP Switch Settings

Switches 6 and 7 -- Continuous Indoor Fan OperationBlower Speed -- The unit is shipped from the factory with the DIP switches positioned for medium low (2) speed during continuous indoor blower operation. The table below provides the continuous blower speeds that will result from different switch settings. Refer to "BLOWER DATA" on page 53 for corresponding cfm values.

TABLE 21

Continuous Indoor Blower Operation -- Blower Speeds

Speed	Switch 6	Switch 7
1 - Low (28%)*	Off	On
2 - Medium Low (38%)* Factory	Off	Off

* Percentage of high speed cooling

Switches 8 and 9 -- Cooling Mode Blower Speed -- The unit is shipped from the factory with the DIP switches positioned for high speed (4) indoor blower motor operation during the cooling mode. TABLE 22 provides the cooling mode blower speeds that will result from different switch settings. Refer to “BLOWER DATA” on page 53 for corresponding cfm values.

TABLE 22

Cooling Mode Blower Speeds

Speed	Switch 8	Switch 9
1 - Low	On	On
2 - Medium Low	Off	On
3 - Medium High	On	Off
4 - High Factory	Off	Off

Switches 10 and 11 -- Cooling Mode Blower Speed Adjustment -- The unit is shipped from the factory with the DIP switches positioned for NORMAL (no) adjustment. The DIP switches may be positioned to adjust the blower speed by +10% or -10% to better suit the application. TABLE 23 provides blower speed adjustments that will result from different switch settings. Refer to “BLOWER DATA” on page 53 for corresponding cfm values.

With switches 10 and 11 set to ON, motor will bypass ramping profiles and all delays and will immediately run at selected COOLING speed upon a call for cool. LED will continue to operate as normal. This mode is used to check motor operation.

TABLE 23

Cooling Mode Blower Speed Adjustment

Adjustment	Switch 10	Switch 11
+10% (approx.)	On	Off
Default Cool CFM	Off	Off
- 10% (approx.)	Off	On
Motor Test	On	On

Switches 12 and 13 -- Cooling Mode Blower Speed Ramping -- Blower speed ramping may be used to enhance dehumidification performance. The switches are factory set at option A which has the greatest effect on blower motor performance. TABLE 24 provides the cooling mode blower speed ramping options that will result from different switch settings. The cooling mode blower speed ramping options are detailed below.

NOTE - *The off portion of the selected ramp profile only applies during heat pump operation in dual fuel applications.*

TABLE 24

Cooling Mode Blower Speed Ramping

Ramping Option	Switch 12	Switch 13
A (factory)	Off	Off
B	On	Off
C	Off	On
D	On	On

Ramping Option A (Factory Selection)

- Motor runs at 50% for 30 seconds.
- Motor then runs at 82% for approximately 7-1/2 minutes.
- If demand has not been satisfied after 7-1/2 minutes,
- motor runs at 100% until demand is satisfied.
- Once demand is met, motor runs at 50% for 30 seconds then ramps down to stop.

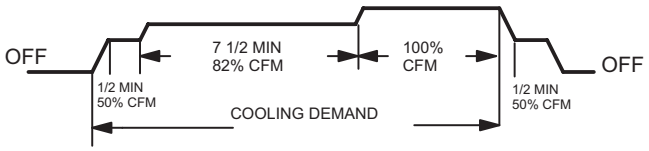

Ramping Option B

- Motor runs at 82% for approximately 7-1/2 minutes. If demand has not been satisfied after 7-1/2 minutes, motor runs at 100% until demand is satisfied.
- Once demand is met, motor ramps down to stop.

Ramping Option C

- Motor runs at 100% until demand is satisfied.
- Once demand is met, motor runs at 100% for 45 seconds then ramps down to stop.

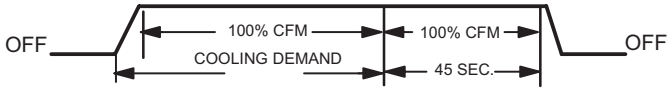

.

Ramping Option D

- Motor runs at 100% until demand is satisfied.
- Once demand is met, motor ramps down to stop.

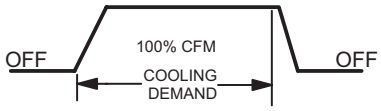

Switches 14 through 19 -- Heating Mode Blower Speed

-- These switches are factory set at the OFF position which provides 100 % of normal speed during HIGH HEAT demand, 70% of normal speed during MID-RANGE HEAT demand and 35% of normal speed during LOW HEAT demand. Switches 14, 15 and 16 are used to adjust the LOW HEAT blower motor speed. Switches 17, 18 and 19 are used to adjust the HIGH HEAT blower motor speed. TABLE 25 provides the heating mode blower speeds that will result from different switch settings. See TABLE 26 for allowable heating speeds.

TABLE 25

Low Heat Blower Speeds

Thermostat Demand	Blower Speed Adjustments	DIP Switch Settings		
		14	15	16
Low Heat (R to W1)	+ 15%	On	Off	On
	+ 7.5%	On	Off	Off
	Normal	Off	Off	Off
	- 7.5%	On	On	Off
	- 15%	On	On	On

TABLE 26

High Heat Blower Speeds

Thermostat Demand	Blower Speed Adjustments	DIP Switch Settings		
		17	18	19
High Heat (R to W1 & W2)	+ 15%	On	Off	On
	+ 7.5%	On	Off	Off
	Normal	Off	Off	Off
	- 7.5%	On	On	Off
	- 15%	On	On	On

On-Board Links

On-Board links must be clipped (when applicable) before unit is placed into operation with a non-communicating thermostat.

On-Board Link W914 (DS to R) -- FIGURE 49

On-board link W914 is a clippable connection between terminals DS and R on the integrated control. W914 must be cut when the furnace is installed with either the Harmony III zone control or a thermostat which features humidity control. If the link is left intact the PMW signal from the Harmony III control will be blocked and also lead to control damage. Refer to TABLE 31 for operation sequence in applications including SLP99DFVK, a thermostat which features humidity control and a single-speed outdoor unit. TABLE 32 gives the operation sequence in applications with a two-speed outdoor unit.

On-Board Link W951 (R to O) -- FIGURE 49

On-board link W951 is a clippable connection between terminals R and O on the integrated control. W951 must be cut when the furnace is installed in applications which include a heat pump unit and a thermostat which features dual fuel use. If the link is left intact, terminal “O” will remain energized eliminating the HEAT MODE in the heat pump.

On-Board Jumper (Y1 to Y2) --FIGURE 50

On-board jumper is clippable between terminals Y1 and Y2 on the integrated control. The jumper must be cut if two-stage cooling will be used. If the link is not cut the outdoor unit will operate in second-stage cooling only.

Diagnostic LED -- FIGURE 49

The seven-segment diagnostic LED displays operating status, target airflow, error codes and other information. *See* “Ignition Control Diagnostic Codes” on page 42.

Diagnostic Push Button -- FIGURE 49

The diagnostic push button is located adjacent to the seven-segment diagnostic LED. This button is used to enable the Error Code Recall mode and the Field Test mode. Press the button and hold it to cycle through a menu of options. Every five seconds a new menu item will be displayed. When the button is released, the displayed item will be selected. Once all items in the menu have been displayed, the menu resumes from the beginning until the button is released.

Error Code Recall Mode

Select ”E” from the menu to access the most recent ten error codes. Select “c” from the Error Code Recall menu to clear all error codes. Button must be pressed a second time while “c” is flashing to confirm command to delete codes. Press the button until a solid “≡” is displayed to exit the Error Code Recall mode.

Field Test Mode

Use the diagnostic push button to scroll through the menu as described above. Release the button when the LED flashes “-” to select the Field Test mode. While in the Field Test mode the technician can:

- Initiate furnace ignition and move to and hold low-fire rate by applying a R to W1 jumper.
- Initiate furnace ignition sequence and move to and hold high-fire rate by applying a jumper from R to W1 nd W2.
- Initiate furnace ignition sequence and move to and hold mid-fire rate by applying a jumper to R and W2.
- Apply then remove the jumper from R to W1 and W2 to change the firing rate from low fire to mid fire and high fire.
- A vent calibration sequence can be initiated even if a thermostat signal is not present. Press and hold the push button until a solid “C” is displayed. Release the button and calibration will begin. The furnace will perform the high-fire and low-fire pressure switch calibrations and display “CAL”. After calibration, the LED will return to the flashing “-” display.

During Field Test mode operation, all safety switches are still in the circuit (they are not by-passed) and indoor blower performance and timings will match DIP switch selections. Current furnace firing rate, indoor blower CFM and flame signal will be displayed. To exit the Field Test mode, press and hold the button. The menu will resume from the beginning. Also, cycle the main power to exit the Field Test mode. The integrated control will automatically exit the Field Test mode after 45 minutes of operation.

Low GWP Application

⚠ WARNING

For use with Lennox approved evaporator coil and LGWP sensors only. Use original manufacturer recommended LGWP sensors if using non Lennox approved evaporator coil.

CONNECTING THE FURNACE CONTROL BOARD SENSOR.

See FIGURE 52 and follow steps below:

1 - Route sensor wire #1 through provided grommet.

2 - Avoid sharp edges when routing sensor wire during installation.

3 - Sensor wire must not block view of 7 segment LED .

Ensure the cable is properly seated into the SENSOR 1 plug (LGWP1). The Molex plug clip should lock into the Molex connection point for a secured connection, as shown below in FIGURE 50. Verify the connection is free of dust, debris, and moisture.

NOTE - *In confined space applications, connect the second sensor to the SENSOR 2 plug (LGWP2). Refer to evaporator coil installation instructions for more detail.*

Modulating Furnace Control

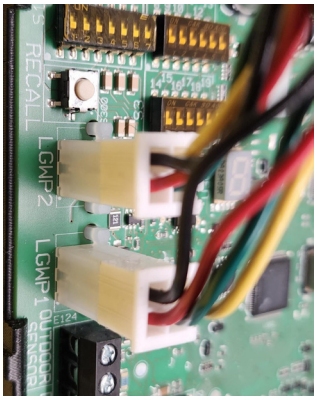

FIGURE 50

LOW GWP DIP SWITCH SETTINGS

Adjust the DIP switch settings to the sensor configuration. Failure to do so will cause faults on power-up. See FIGURE 51 and TABLE 27.

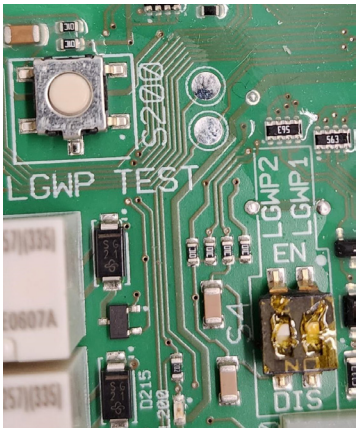

FIGURE 51

TABLE 27

DIP Switch Settings

Configuration	Switch 1	Switch 2
One (1) sensor, connected to SENSOR 1 plug	OFF (enable)	ON (disable)
Two (2) sensors, connected to SENSOR 1 plug and SENSOR 2 plug	OFF (enable)	OFF (enable)

In single sensor configurations, the sensor must be connected to the SENSOR 1 plug (LGWP1). Configurations other than the ones shown in TABLE 27 will cause a servicing fault.

Each DIP switch corresponds to a sensor position (i.e., DIP switch 1 to sensor 1; DIP switch 2 to sensor 2). The default factory switch positions are set to OFF (ENABLED)

The furnace control board software reads the OFF position as an active sensor. A sensor should be present for the corresponding sensor connector. Setting the DIP switch to ON disables the sensor position.

SECONDARY SENSOR REQUIREMENTS

Additional Line Sets

If additional refrigerant line joints are present outside of the line set sleeve and a secondary refrigerant detection sensor is required, its installation must comply with the requirement listed in Refrigeration Detection Sensor kit (27V53). See FIGURE 52 for routing the secondary sensor cable through the furnace cabinet.

Non-Low GWP Applications

⚠ WARNING

For Furnace only applications or Furnace replacement in a Non-Low GWP applications, the LOW GWP sensors should be disabled, otherwise the blower will operate continuously. To do this, the Low GWP Dip switches setting for both – Sensor 1 and the Sensor 2 must be moved to the ON position.

FURNACE CONTROL BOARD LOW GWP MODES OF OPERATION

The modes of operation for the furnace control board are Initializing, Normal, Leak Detected, and Fault.

Initializing

The furnace control board is establishing connection with the refrigerant detection sensor and is completing an initial five-minute purge sequence.

Normal

The HVAC system is functioning normally. The furnace control board has not detected a refrigerant leak.

Leak Detected

When the furnace control board detects a refrigerant leak:

1. The furnace control board shuts off the (R) input (24VAC power) to the thermostat, which de-energizes the outdoor unit compressor and heat sources, such as gas and/or electric strip heat. No heating or cooling demands will be met.
2. The furnace control board activates the blower (high speed). The blower purges refrigerant from the cabinet, plenum, and ductwork.
3. After the furnace control board determines the refrigerant levels are below the safety threshold, the blower will continue to operate for the remainder of the seven (7) -minute cycle.
4. After the blower sequence is complete, the HVAC system resumes normal operation.

NOTE - *The HVAC system may not maintain a cooling or heating setpoint if a significant leak exists. Any refrigerant leaks that remain unaddressed for an extended time may cause the HVAC system to shut down on a low refrigerant pressure limit condition.*

Fault

When a Low GWP fault is detected by the furnace control board, the indoor unit blower engages and remains engaged at a constant air flow output until the fault is cleared.

NOTE - *See* “Ignition Control Diagnostic Codes” on page 42.

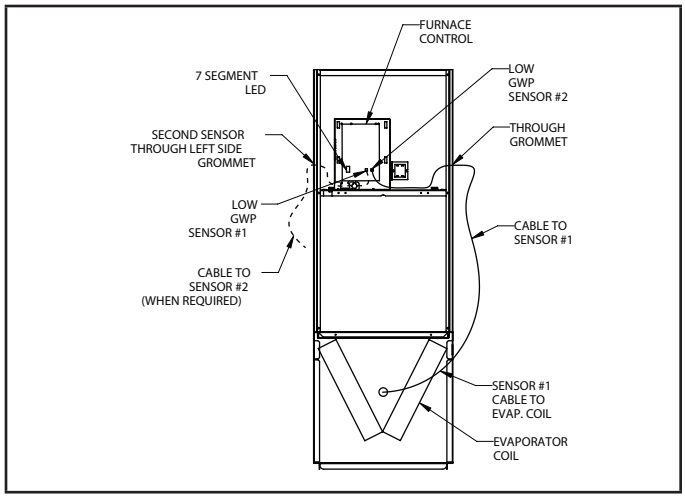

FIGURE 52

TABLE 28

LGWP Test Button Function

Mode of Operation	Press the Test Button to:
Normal	Trigger a leak detection response. Verify all equipment is wired correctly into the furnace blower control board (after installation).
Leak Detected	Reset the furnace control board to a normal mode of operation after a previous leak has been detected and purged from the HVAC system
Fault	Reset the furnace control board after troubleshooting and resolving a fault condition. If the fault is not resolved, the furnace control board will enter the Fault mode again.

LGWP Test Button - Additional Functions

TABLE 29 lists the additional functions of the Test Button while the furnace control board is functioning within the states of Initializing, Monitoring, Leak Detection, Servicing and Fault.

TABLE 29

Additional Button Functions

State	Press	Action
Initializing	Short	Skips remaining pre-purge after sensors are recognized by the furnace control board
Initializing	Long	Reset control
Monitoring	Short	Clear purge-counter if prior mitigation has occurred; Test mitigation
Monitoring	Long	Reset control
Mitigating	Short	If testing mitigation, end test
Servicing	Short	Reevaluate fault condition - if cleared return to monitoring, otherwise update indicator
Servicing	Long	Reset control
Fault	Short	Reevaluate fault condition - if cleared return to monitoring, otherwise update indicator
Fault	Long	Reset control

External Alarm

(*For applications with external alarms wired directly to the furnace control board*)

The furnace control board triggers the external alarm system when it enters Leak Detected mode. For alarm notifications, the furnace control board provides a dry relay contact that is rated 3A at 30 VAC/DC.

THERMOSTAT COMPATIBILITY

Thermostats that preserve memory settings are compatible with the furnace control board. Examples include:

- Battery-powered thermostats
- Analog thermostats
- Late-model programmable thermostats

NOTE - *Early-generation digital and programmable thermostats may not retain the operation mode and temperature setpoints after a power outage.*

The following scenarios are likely to occur when home occupants are not available to adjust the thermostat setpoints as the system is recovering from leak detection and resuming normal operation:

- Heating could be lost during a cold night
- Cooling could be lost during a hot day
- The thermostat could reset to an incorrect temperature setpoint

START UP PROCEDURE

The furnace control board is equipped with a LGWP Test/Reset button, see “Test Button Functionality”. After the furnace control board has been mounted and wired, restore power to the HVAC system. The system will then run through a purge sequence for five minutes. After the purge sequence is complete, proceed to testing cooling demand and heating demand.

Cooling Demand

1. Prompt a cooling demand at the thermostat.
2. Press the LGWP Test button on the furnace control board.

   The system then executes a leak detection response.
3. Observe the following sequence:
   a. The LED indicator for leak detection. See *See* “Ignition Control Diagnostic Codes” on page 42.
   b. The blower powers up.
   c. The outdoor compressor powers down.
4. Press the LGWP Test button to terminate the simulated Leak Detected mode upon test completion

Heating Demand

1. Prompt a heating demand at the thermostat.
2. Observe the following sequence:
   a. The LED indicator for leak detection. See
   b. The blower powers up.
   c. The gas burners power down.
   d. The outdoor compressor powers down.
3. Press the LGWP Test button to terminate the simulated Leak Detected mode upon test completion.

The installation of the furnace control board is complete after both sequences are successfully completed.

BLOWER DATA

SLP99DF070XV36B BLOWER PERFORMANCE (less filter)

HEATING BLOWER PERFORMANCE - 0 through 0.8 in. w.g. External Static Pressure Range

Heating Adjust CFM Selections	Heating Input Range and Blower Volume - CFM							
	35%	40%	50%	60%	70%	80%	90%	100%
Increase (+15%) Heat CFM	495	543	639	735	830	926	1022	1118
Increase (+7.5%) Heat CFM	473	516	604	691	778	866	953	1041
Default Heat CFM	450	489	568	647	726	805	884	963
Decrease (-7.5%) Heat CFM	430	467	540	614	687	761	834	908
Decrease (-15%) Heat CFM	410	444	512	580	649	717	785	853

COOLING BLOWER PERFORMANCE - 0 through 1.0 in. w.g. External Static Pressure Range

Cooling Adjust CFM Selections	Blower Speed Selections							
	First Stage Cool Speed - cfm				Second Stage Cool Speed - cfm			
	Low	Medium-Low	Medium High	High (Default)	Low	Medium-Low	Medium High	High (Default)
Increase (+10%) Cool CFM	625	785	890	995	910	1075	1230	1365
Default Cool CFM	575	710	830	890	845	960	1125	1265
Decrease (-10%) Cool CFM	520	615	710	820	755	885	985	1150

BLOWER DATA

SLP99DF090XV36C BLOWER PERFORMANCE (less filter)

HEATING BLOWER PERFORMANCE - 0 through 0.8 in. w.g. External Static Pressure Range

Heating Adjust CFM Selections	Heating Input Range and Blower Volume - CFM							
	35%	40%	50%	60%	70%	80%	90%	100%
Increase (+15%) Heat CFM	710	756	848	940	1033	1125	1217	1309
Increase (+7.5%) Heat CFM	670	713	799	885	971	1057	1143	1230
Default Heat CFM	629	669	749	829	910	990	1070	1150
Decrease (-7.5%) Heat CFM	559	599	681	763	845	927	1009	1091
Decrease (-15%) Heat CFM	488	530	614	697	781	865	948	1032

COOLING BLOWER PERFORMANCE - 0 through 1.0 in. w.g. External Static Pressure Range

Cooling Adjust CFM Selections	Blower Speed Selections							
	First Stage Cool Speed - cfm				Second Stage Cool Speed - cfm			
	Low	Medium-Low	Medium High	High (Default)	Low	Medium-Low	Medium High	High (Default)
Increase (+10%) Cool CFM	610	770	900	1035	920	1080	1215	1385
Default Cool CFM	545	690	805	920	835	1000	1135	1255
Decrease (-10%) Cool CFM	465	620	720	810	750	890	1025	1145

The effect of static pressure is included in air volumes shown.

The following control configurations are available. See Installation Instructions for details and DIP switch settings.

Heat Modes Available (Heating Blower Performance Table):

Single-stage thermostat:
- 35%, 70%, 100% input (three-stage) with time delays in-between

Two-stage thermostat:
- Variable Rate Capacity Mode - furnace automatically adjusts firing rate based on first- and second-stage cycle times.
- W1 demand at 70% input, W2 demand at 100% input. No delay between stages.

Cool Mode Available (Cooling Blower Performance Table):

First stage COOL (two-stage air conditioning units only) is approximately 70% of the same second stage COOL speed position.

Continuous Fan speeds are approximately 28%, and 38%, (DIP switch selectable) of the same second-stage COOL speed position minimum 250 cfm.

Lennox iHarmony® Zoning System Applications - Minimum blower speed is 250 cfm.

BLOWER DATA

SLP99DF090XV48C BLOWER PERFORMANCE (less filter)

HEATING BLOWER PERFORMANCE - 0 through 0.8 in. w.g. External Static Pressure Range

Heating Adjust CFM Selections	Heating Input Range and Blower Volume - CFM							
	35%	40%	50%	60%	70%	80%	90%	100%
Increase (+15%) Heat CFM	723	790	925	1060	1195	1329	1464	1599
Increase (+7.5%) Heat CFM	690	752	878	1004	1129	1255	1381	1507
Default Heat CFM	656	714	831	948	1064	1181	1297	1414
Decrease (-7.5%) Heat CFM	601	654	761	867	974	1081	1188	1295
Decrease (-15%) Heat CFM	545	593	690	787	884	981	1078	1175

COOLING BLOWER PERFORMANCE - 0 through 1.0 in. w.g. External Static Pressure Range

Cooling Adjust CFM Selections	Blower Speed Selections							
	First Stage Cool Speed - cfm				Second Stage Cool Speed - cfm			
	Low	Medium-Low	Medium High	High (Default)	Low	Medium-Low	Medium High	High (Default)
Increase (+10%) Cool CFM	775	940	1100	1255	1120	1340	1535	1745
Default Cool CFM	690	875	975	1135	1000	1220	1425	1625
Decrease (-10%) Cool CFM	635	755	915	1025	920	1100	1270	1470

SLP99DF090XV60C BLOWER PERFORMANCE (less filter)

HEATING BLOWER PERFORMANCE - 0 through 0.8 in. w.g. External Static Pressure Range

Heating Adjust CFM Selections	Heating Input Range and Blower Volume - CFM							
	35%	40%	50%	60%	70%	80%	90%	100%
Increase (+15%) Heat CFM	653	728	877	1027	1176	1326	1475	1625
Increase (+7.5%) Heat CFM	603	673	813	953	1092	1232	1372	1512
Default Heat CFM	553	618	748	878	1009	1139	1269	1399
Decrease (-7.5%) Heat CFM	510	570	690	811	931	1051	1171	1292
Decrease (-15%) Heat CFM	467	522	632	743	853	963	1074	1184

COOLING BLOWER PERFORMANCE - 0 through 1.0 in. w.g. External Static Pressure Range

Cooling Adjust CFM Selections	Blower Speed Selections							
	First Stage Cool Speed - cfm				Second Stage Cool Speed - cfm			
	Low	Medium-Low	Medium High	High (Default)	Low	Medium-Low	Medium High	High (Default)
Increase (+10%) Cool CFM	1110	1265	1395	1600	1600	1750	1965	2130
Default Cool CFM	1000	1145	1275	1445	1445	1625	1805	1975
Decrease (-10%) Cool CFM	885	1060	1145	1265	1265	1445	1645	1805

The effect of static pressure is included in air volumes shown.
The following control configurations are available. See Installation Instructions for details and DIP switch settings.

Heat Modes Available (Heating Blower Performance Table):

Single-stage thermostat:
- 35%, 70%, 100% input (three-stage) with time delays in-between

Two-stage thermostat:
- Variable Rate Capacity Mode - furnace automatically adjusts firing rate based on first- and second-stage cycle times.
- W1 demand at 70% input, W2 demand at 100% input. No delay between stages.

Cool Mode Available (Cooling Blower Performance Table):

First stage COOL (two-stage air conditioning units only) is approximately 70% of the same second stage COOL speed position.
Continuous Fan speeds are approximately 28% and 38% (DIP switch selectable) of the same second-stage COOL speed position minimum 250 cfm.

Lennox iHarmony® Zoning System Applications - Minimum blower speed is 380 cfm.

BLOWER DATA

SLP99DF110XV60C BLOWER PERFORMANCE (less filter)

HEATING BLOWER PERFORMANCE - 0 through 0.8 in. w.g. External Static Pressure Range

Heating Adjust CFM Selections	Heating Input Range and Blower Volume - CFM							
	35%	40%	50%	60%	70%	80%	90%	100%
Increase (+15%) Heat CFM	811	906	1096	1286	1475	1665	1855	2045
Increase (+7.5%) Heat CFM	744	835	1017	1199	1380	1562	1744	1926
Default Heat CFM	677	764	938	1112	1285	1459	1633	1807
Decrease (-7.5%) Heat CFM	626	707	869	1031	1193	1355	1517	1679
Decrease (-15%) Heat CFM	575	650	800	950	1101	1251	1401	1551

COOLING BLOWER PERFORMANCE - 0 through 1.0 in. w.g. External Static Pressure Range

Cooling Adjust CFM Selections	Blower Speed Selections							
	First Stage Cool Speed - cfm				Second Stage Cool Speed - cfm			
	Low	Medium-Low	Medium High	High (Default)	Low	Medium-Low	Medium High	High (Default)
Increase (+10%) Cool CFM	1090	1260	1395	1580	1580	1790	1990	2180
Default Cool CFM	965	1125	1285	1440	1440	1625	1845	2000
Decrease (-10%) Cool CFM	860	1030	1125	1270	1270	1470	1655	1845

The effect of static pressure is included in air volumes shown.
The following control configurations are available. See Installation Instructions for details and DIP switch settings.

Heat Modes Available (Heating Blower Performance Table):
Single-stage thermostat:
- 35%, 70%, 100% input (three-stage) with time delays in-between

Two-stage thermostat:
- Variable Rate Capacity Mode - furnace automatically adjusts firing rate based on first- and second-stage cycle times.
- W1 demand at 70% input, W2 demand at 100% input. No delay between stages.

Cool Mode Available (Cooling Blower Performance Table):
First stage COOL (two-stage air conditioning units only) is approximately 70% of the same second stage COOL speed position.
Continuous Fan speeds are approximately 28% and 38% (DIP switch selectable) of the same second-stage COOL speed position minimum 250 cfm.

Lennox iHarmony® Zoning System Applications - Minimum blower speed is 450 cfm.

TABLE 30

Allowable Heating Speeds

SLP99DF Model	-15%	-7.5%	Default	+7.5%	+15%
All Models	Allowed	Allowed	Factory	Allowed	Allowed

TABLE 31

Allowable Circulation Speeds

SLP99DF Model	28% (Second Stage Cool)	38% (second stage cool)
All Models	Allowed	Factory Setting

TABLE 32
COOLING OPERATING SEQUENCE
SLP99DFVK and Single-Stage Outdoor Unit

OPERATING SEQUENCE		SYSTEM DEMAND			SYSTEM RESPONSE				
System Condition	Step	Thermostat Demand			Relative Humidity		Compressor	Blower CFM (cool)	Comments
		1st stage	O	G	Status	D*			
NO CALL FOR DEHUMIDIFICATION									
Normal Operation	1	On	On	On	Acceptable	24 VAC	High	100%	Compressor and indoor blower follow thermostat demand
BASIC MODE (only active on a Y1 thermostat demand)									
Normal Operation	1	On	On	On	Acceptable	24 VAC	High	100%	Thermostat energizes Y1 and de-energizes D on a call for de-humidification
Dehumidification call	2	On	On	On	Demand	0 VAC	High	70%	
PRECISION MODE (operates independent of a Y1 demand)									
Normal Operation	1	On	On	On	Acceptable	24 VAC	High	100%	Dehumidification mode begins when humidity is greater than set point
Dehumidification Call	2	On	On	On	Demand	0 VAC	High	70%	
Dehumidification Call Only	1	On	On	On	Demand	0 VAC	High	70%	Thermostat will keep outdoor unit energized after cooling temperature setpoint has been reached in order to maintain room humidity setpoint.
On-board links at indoor unit with a single-stage outdoor unit: With Condensing unit - Cut W914 (R to DS) on SureLight® control; With Heat Pump - Cut W914 (R to DS) & W951 (R to O)on SureLight® control. *ComfortSense® 7500 thermostat only									

TABLE 33
OPERATING SEQUENCE
SLP99DFVK and Two-Speed Outdoor Unit

OPERATING SEQUENCE		SYSTEM DEMAND				SYSTEM RESPONSE				
System Condition	Step	Thermostat Demand				Relative Humidity		Compressor	Blower CFM (cool)	Comments
		1 st stage	2nd stage	O	G	Status	D*			
NO CALL FOR DEHUMIDIFICATION										
Normal Operation Y1	1	On		On	On	Acceptable	24 VAC	Low	70%	Compressor and indoor blower follow thermostat demand
Normal Operation Y2	2	On	On	On	On	Acceptable	24 VAC	High	100%	
ROOM THERMOSTAT CALLS FOR FIRST STAGE COOLING										
BASIC MODE (only active on a Y1 thermostat demand)										
Normal Operation	1	On		On	On	Acceptable	24 VAC	Low	70%	Thermostat energizes 2nd stage and de-energizes D on a call for dehumidification
Dehumidification call	2	On	On	On	On	Demand	0 VAC	High	70%	
PRECISION MODE (operates independent of a Y1 demand)										
Normal Operation	1	On		On	On	Acceptable	24 VAC	Low	70%	Dehumidification mode begins when humidity is greater than set point
Dehumidification Call	2	On	On	On	On	Demand	0 VAC	High	70%	
Dehumidification Call Only	1	On	On	On	On	Demand	0 VAC	High	70%	Thermostat will keep outdoor unit energized after cooling temperature setpoint has been reached in order to maintain room humidity setpoint.*
ROOM THERMOSTAT CALLS FOR FIRST AND SECOND STAGE COOLING										
BASIC MODE (only active on a Y1 thermostat demand)										
Normal Operation	1	On	On	On	On	Acceptable	24 VAC	High	100%	Thermostat energizes 2nd stage and de-energizes D on a call for dehumidification
Dehumidification Call	2	On	On	On	On	Demand	0 VAC	High	70%	
PRECISION MODE (operates independent of a Y1 thermostat demand)										
Normal Operation	1	On		On	On	Acceptable	24 VAC	Low	70%	Dehumidification mode begins when humidity is greater than set point
Dehumidification Call	2	On	On	On	On	Demand	0 VAC	High	70%	
Dehumidification Call ONLY	1	On	On	On	On	Demand	0 VAC	High	70%	Thermostat will keep outdoor unit energized after cooling temperature set-point has been reached in order to maintain room humidity set-point.
On-board links at indoor unit with a two-stage outdoor unit: Cut factory link from Y1 to Y2 or cut W915 (Y1 to Y2) on SureLight® integrated control. With Condensing unit - Cut W914 (R to DS) on SureLight® integrated control; With Heat Pump - Cut W914 (R to DS) & W951 (R to O) on SureLight® integrated control. *ComfortSense® 7500 thermostat only										

Unit Start-Up

FOR YOUR SAFETY READ BEFORE OPERATING

⚠ WARNING

Do not use this furnace if any part has been underwater. A flood-damaged furnace is extremely dangerous. Attempts to use the furnace can result in fire or explosion. Immediately call a qualified service technician to inspect the furnace and to replace all gas controls, control system parts, and electrical parts that have been wet or to replace the furnace, if deemed necessary.

⚠ WARNING

Danger of explosion. Can cause injury or product or property damage. Should the gas supply fail to shut off or if overheating occurs, shut off the gas valve to the furnace before shutting off the electrical supply.

⚠ CAUTION

Before attempting to perform any service or maintenance, turn the electrical power to unit OFF at disconnect switch.

⚠ WARNING

During blower operation, the ECM motor emits energy that may interfere with pacemaker operation. Interference is reduced by both the sheet metal cabinet and distance.

Priming Condensate Trap

The condensate trap should be primed with water prior to start-up to ensure proper condensate drainage. Either pour 10 fl. oz. (300 ml) of water into the trap, or follow these steps to prime the trap:

1 - Follow the lighting instructions to place the unit into operation.

2 - Set the thermostat to initiate a heating demand.

3 - Allow the burners to fire for approximately 3 minutes.

4 - Adjust the thermostat to deactivate the heating demand.

5 - Wait for the combustion air inducer to stop. Set the thermostat to initiate a heating demand and again allow the burners to fire for approximately 3 minutes.

6 - Adjust the thermostat to deactivate the heating demand and again wait for the combustion air inducer to stop. At this point, the trap should be primed with sufficient water to ensure proper condensate drain operation.

BEFORE BEFORE PLACING THE UNIT INTO OPERATION, smell all around the furnace area for gas. Be sure to smell next to the floor because some gas is heavier than air and will settle on the floor. The gas valve on the SLP99DFVK is equipped with a gas control switch. Use only your hand to move the control switch. Never use tools. If the switch will not move by hand, do not try to repair it. Force or attempted repair may result in a fire or explosion.

Placing the furnace into operation:

SLP99DFVK units are equipped with an automatic ignition system. Do not attempt to manually light burners on this furnace. Each time the thermostat calls for heat, the burners will automatically light. The ignitor does not get hot when there is no call for heat on units with this ignition system.

⚠ WARNING

If you do not follow these instructions exactly, a fire or explosion may result causing property damage, personal injury or death.

Gas Valve Operation (FIGURE 53)

1 - **STOP!** Read the safety information at the beginning of this section.

2 - Set the thermostat to the lowest setting.

3 - Turn off all electrical power to the unit.

4 - This furnace is equipped with an ignition device which automatically lights the burners. Do not try to light the burners by hand.

5 - Remove the access panel.

6 - Move the gas valve switch to the OFF position. See FIGURE 53.

7 - Wait five minutes to clear out any gas. If you then smell gas, STOP! Immediately call the gas supplier from a neighbor's phone. Follow the gas supplier's instructions. If you do not smell gas go to next step.

8 - Move gas valve switch to the ON position. See FIGURE 53. Do not force.

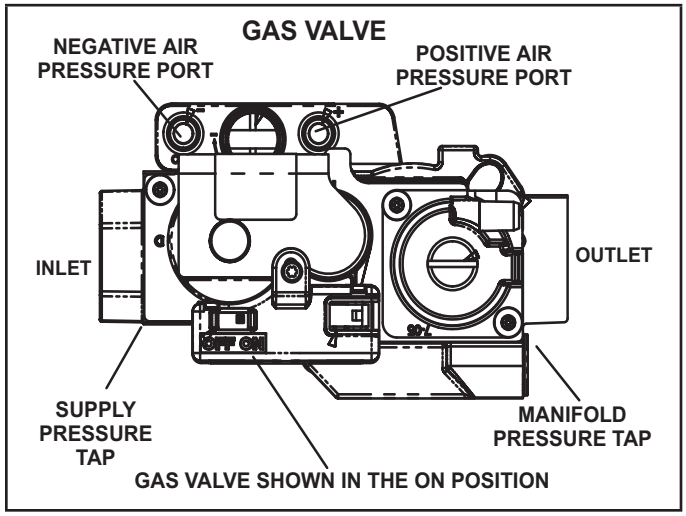

FIGURE 53

9 - Replace the access panel.

10 - Turn on all electrical power to to the unit.

11 - Set the thermostat to desired setting.

NOTE - *When unit is initially started, steps 1 through 11 may need to be repeated to purge air from gas line.*

12 - If the appliance will not operate, follow the instructions "Turning Off Gas to Unit" and call the gas supplier.

Turning Off Gas to Unit

1 - Set the thermostat to the lowest setting.

2 - Turn off all electrical power to the unit if service is to be performed.

3 - Remove the access panel.

4 - Move the gas valve switch to the OFF position.

5 - Replace the access panel.

Failure To Operate

If the unit fails to operate, check the following:

1 - Is the thermostat calling for heat?

2 - Are access panels securely in place?

3 - Is the main disconnect switch closed?

4 - Is there a blown fuse?

5 - Is the filter dirty or plugged? Dirty or plugged filters will cause the limit control to shut the unit off.

6 - Is gas turned on at the meter?

7 - Is the manual main shut-off valve open?

8 - Is the gas valve turned on?

9 - Is the unit ignition system in lock out? If the unit locks out again, inspect the unit for blockages.

10 - Is blower harness connected to ignition control? Furnace will not operate unless harness is connected.

High Altitude Information

NOTE - *In Canada, certification for installations at elevations over 4500 feet (1372 m) is the jurisdiction of local authorities.*

SLP99DFVK units require no manifold pressure adjustments for operation at altitudes up to 10,000 feet (3048 m) above sea level. Units installed at altitude of 7,501 to 10,000 feet (2287 to 3048m) require a pressure switch change and conversion kit. See TABLE 37.

The combustion air pressure switch is factory-set and requires no adjustment.

Gas Pressure Measurement

Gas Flow (Approximate)

TABLE 34

GAS METER CLOCKING CHART

SLP99 Unit	Seconds for One Revolution			
	Natural		LP	
	1 cu ft Dial	2 cu ft Dial	1 cu ft Dial	2 cu ft Dial
-070	55	110	136	272
-090	41	82	102	204
-110	33	66	82	164
-135	27	54	68	136
Natural-1000 btu/cu ft LP-2500 btu/cu ft				

Furnace should operate at least 5 minutes before checking gas flow. Determine time in seconds for two revolutions of gas through the meter. (Two revolutions assures a more accurate time.) **Divide by two** and compare to time in TABLE 34. If manifold pressure matches TABLE 34 and rate is incorrect, check gas orifices for proper size and restriction. Remove temporary gas meter if installed.

NOTE - *To obtain accurate reading, shut off all other gas appliances connected to meter.*

Supply Pressure Measurement

A threaded plug on the inlet side of the gas valve provides access to the supply pressure tap. Remove the threaded plug, install a field-provided barbed fitting and connect a manometer to measure supply pressure. Replace the threaded plug after measurements have been taken.

Proper Combustion

Furnace should operate minimum 15 minutes with correct manifold pressure and gas flow rate before checking combustion. Take combustion sample beyond the flue outlet and compare to the tables below. The maximum carbon monoxide reading should not exceed 100 ppm.

TABLE 35

High Fire

SLP99DFVK Unit		
070	6.5 - 9.0	7.7 - 10.2
090		
110		

TABLE 36

Low Fire

SLP99DFVK Unit		
070	4.7 - 7.2	5.7 - 8.2
090		
110		

Manifold Pressure Measurement (FIGURE 54)

To correctly measure manifold pressure, the differential pressure between the positive gas manifold and the negative burner box must be considered. *Use pressure test adapter kit (available as Lennox part 10L34) to assist in measurement.*

1 - Remove the threaded plug from the outlet side of the gas valve and install a field-provided barbed fitting. Connect measuring device “+” connection to barbed fitting to measure manifold pressure.
2 - Tee into the gas valve regulator vent hose and connect measuring device “-” connection.
3 - Start unit on low heat (35% rate) and allow 5 minutes for unit to reach steady state.
4 - While waiting for the unit to stabilize, notice the flame. Flame should be stable and should not lift from burner. Natural gas should burn blue.
5 - After allowing unit to stabilize for 5 minutes, record manifold pressure and compare to value given in TABLE 38.
6 - Repeat steps 3, 4 and 5 on high heat.
7 - Shut unit off and remove manometer as soon as an accurate reading has been obtained. Take care to remove barbed fitting and replace threaded plug.
8 - Start unit and perform leak check. Seal leaks if found.

TABLE 37

Conversion Kit Requirements

Model Input Size	LP/Propane	High Altitude Pressure Switch	
	0 - 10,000 ft (0 - 3048m)	0 - 7500 ft (0 - 2286m)	7501 ft - 10,000 ft (287 - 3048m)
070	65W77	Not Required	14T67
090			
110			

Operating Pressure Signal (Delta P) Measurement (FIGURE 55)

Operating pressure signal can be taken while the manifold pressure pressure check is taken (using two measuring devices). Or, taken after the manifold pressure measurement is complete.

1 - Tee into the negative line between the gas valve and pressure switch and connect to measuring device negative “-”.
2 - Tee into the positive line between the gas valve and pressure switch and connect to measuring device positive “+”.
3 - Start unit on low heat (35% rate) and allow 5 minutes for unit to reach steady state.
4 - After allowing unit to stabilize for 5 minutes, record operating pressure signal and compare to value given in TABLE 38.
5 - Repeat steps 3 on 4 high heat.

⚠ WARNING

Do not attempt to make adjustments to the gas valve.

.

TABLE 38

Manifold and Operating Signal Pressures in inches 0 - 7500 ft (0 - 2286 m)

SLP99 Firing Rate	Manifold Pressure Natural Gas		Manifold Pressure LP/Propane		Operating Pressure Signal (Delta P)	
	Min	Max	Min	Max	Min	Max
Low	0.4	0.95	1.2	2.8	0.20	0.40
High	3.0	3.8	9.1	10.5	0.95	1.25

NOTE - *A natural to LP/propane gas changeover kit is necessary to convert this unit. Refer to the changeover kit installation instruction for the conversion procedure.*

NOTE - *The values given in table are measurements only. The gas valve should NOT be adjusted.*

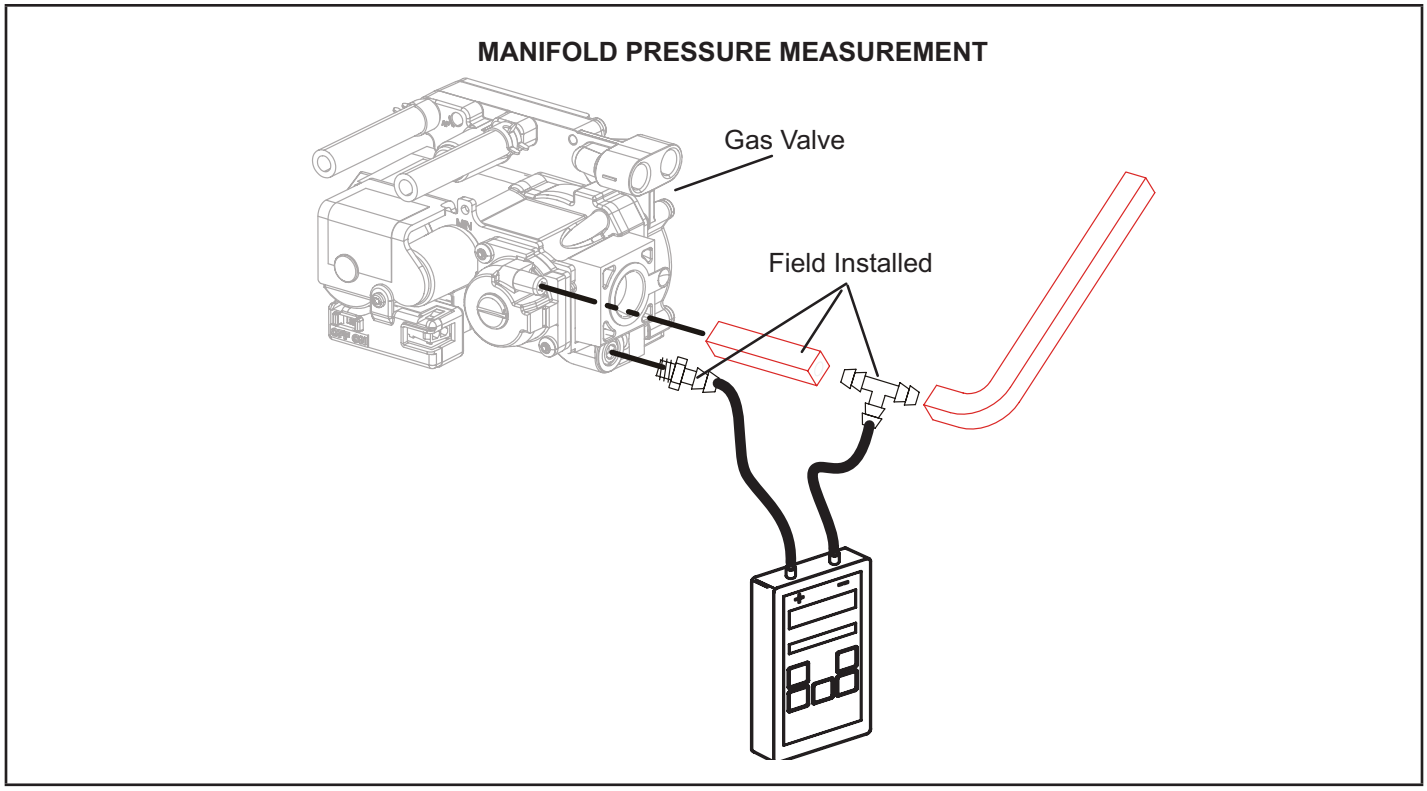

FIGURE 54

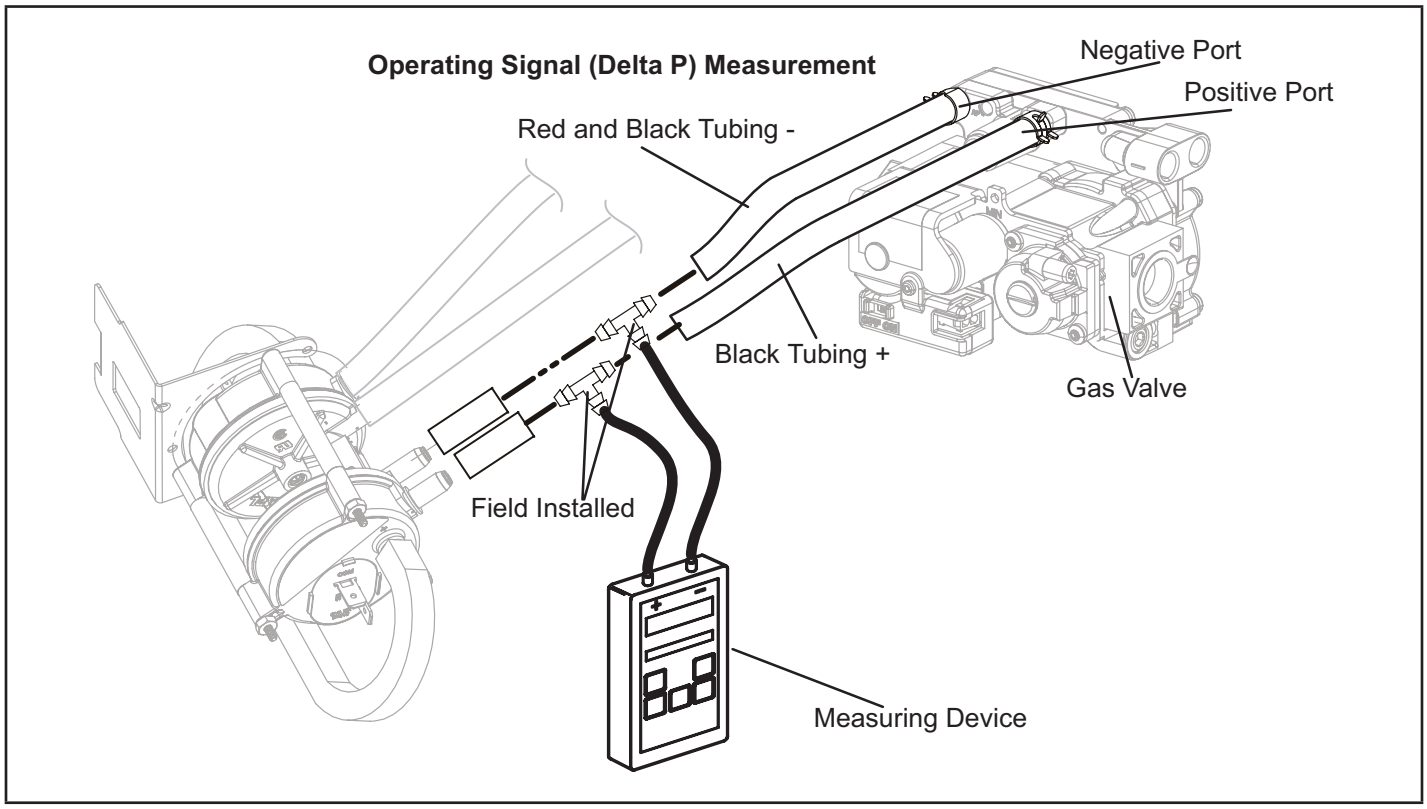

FIGURE 55

Other Unit Adjustments

Primary Limit

The primary limit is located on the heating compartment vestibule panel. This limit is factory set and require no adjustment.

Flame Rollout Switches (Two)

These manually reset switches are located on the burner box.

Pressure Switches (Two)

The pressure switches are located in the heating compartment on the combustion air inducer. These switches check for proper combustion air inducer operation before allowing ignition trial. The switches are factory-set and require no adjustment. Pressure switch tubing installation is critical for safe operation. See FIGURE 56.

PRESSURE SWITCH TUBING INSTALLATION

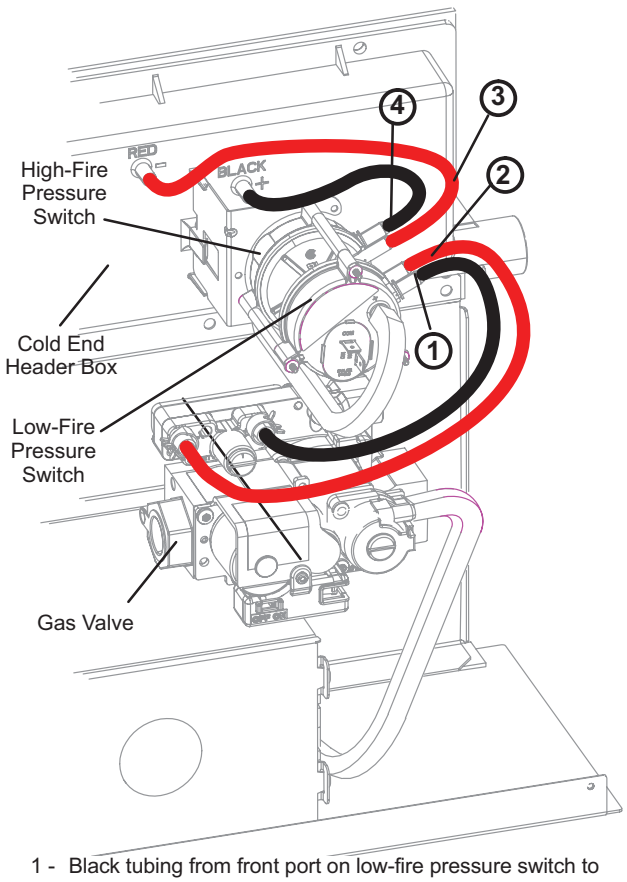

1 - Black tubing from front port on low-fire pressure switch to positive port on the gas valve.
2 - Red and black tubing from rear port on low-fire pressure switch to the negative port on the gas valve.
3 - Red and black tubing from front port on high-fire pressure switch to negative port on cold end header box.
4 - Black tubing from rear port on high-fire pressure switch to positive port on cold end header box.

FIGURE 56

Temperature Rise

After the furnace has been started and supply and return air temperatures have been allowed to stabilize, check the temperature rise with the unit operating at 100 percent firing rate. See “Duct System” on page 9 for installing the optional discharge air sensor used to measure temperature rise. Sensor is shipped with the unit. If necessary, adjust the blower speed to maintain the temperature rise within the range shown on the unit nameplate. See TABLE 26 for allowable heating speeds. Increase the blower speed to decrease the temperature. Decrease the blower speed to increase the temperature rise. Failure to adjust the temperature rise may cause erratic limit operation.

Electrical

1 - Check all wiring for loose connections.
2 - Check for the correct voltage at the furnace (furnace operating).Correct voltage is 120VAC + 10%.
3 - Check amp-draw on the blower motor with innerlower panel in place.

Motor Nameplate_____Actual_____

Electronic Ignition

The integrated control has an added feature of an internalWatchguard control. The feature serves as an automatic reset device for ignition control lockout caused by ignition failure. This type of lockout is usually due to low gas line pressure. After one hour of continuous thermostat demand for heat, the Watchguard will break and remake thermostat demand to the furnace and automatically reset the control to begin the ignition sequence.

Exhaust and Air Intake Pipe

1 - Check exhaust and air intake connections for tightness and to make sure there is no blockage.
2 - Are pressure switches closed? Obstructed exhaust pipe will cause unit to shut off at pressure switches. Check termination for blockages.
3 - Reset manual flame rollout switches on burner box cover.

Heating Sequence of Operation

The integrated control initiates a pressure switch calibration at the initial unit start-up on a call for heat. The ignition control will also initiate a calibration any time main power is turned off and back on and a heating demand is present . Additional calibrations may be initiated by the service technician during field test sequence. The following heating sequence of operation assumes completion of a successful calibration.

NOTE - *The thermostat selection DIP switch on the integrated control is factory-set in the “TWO-STAGE” position.*

Applications Using a Two-Stage Thermostat

A - Heating Sequence -- Control Thermostat Selection

DIP switch in “Two-Stage” Position (Factory Setting)

1 - On a call for heat, thermostat first-stage contacts close sending a signal to the integrated control. The integrated control runs a self-diagnostic program and checks high temperature limit switches for normally closed contacts and pressure switches for normally open contacts. The combustion air inducer is energized at ignition speed, which is approximately the same as the inducer speed at 70 percent firing rate.

2 - Once the control receives a signal that the low-fire pressure switch has closed, the combustion air inducer begins a 15-second pre-purge in the ignition speed.

3 - After the pre-purge is complete, a 20-second initial ignitor warm-up period begins. The combustion air inducer continues to operate at the ignition speed.

4 - After the 20-second warm-up period has ended, the gas valve is energized and ignition occurs. At the same time, the control module sends a signal to begin an indoor blower 45-second ON delay. When the delay ends, the indoor blower motor is energized at a speed that matches the firing rate. After the 10-second ignition stabilization delay expires, the inducer speed is adjusted to the appropriate target rate. The inducer will remain at the 70 percent speed as long as the thermostat has a first-stage heating demand.

5 - second-stage heat is required, the thermostat second- stage heat contacts close and send a signal to the integrated control. The integrated control initiates a 30-second second-stage recognition delay.

6 - At the end of the recognition delay and for all subsequent calls for second-stage heat, the integrated control energizes the combustion air inducer at high speed. The control also checks the high-fire pressure switch to make sure it is closed. As the inducer speed is increased to high, the indoor blower motor is adjusted to a speed which is appropriate for secondstage heat.

7 - When the demand for high-fire (second stage) heat is satisfied, the gas valve is de-energized and the fieldselected indoor blower off delay begins. The combustion air inducer begins a 20-second post-purge period.

8 - When the combustion air post-purge period is complete, the inducer is de-energized. The indoor blower is de-energized at the end of the off delay.

Applications Using a Two-Stage Thermostat

B - Heating Sequence -- Control Thermostat Selection DIP switch in "Variable Capacity" Position

1 - On a call for heat, thermostat first-stage contacts close sending a signal to the integrated control. The integrated control runs a self-diagnostic program and checks high temperature limit switches for normally closed contacts and pressure switches for normally open contacts. The combustion air inducer is energized at ignition speed, which is approximately the same as the inducer speed at 70 percent firing rate.

2 - Once the control receives a signal that the low-fire pressure switch has closed, the combustion air inducer begins a 15-second pre-purge in low speed.

3 - After the pre-purge is complete, a 20-second initial ignitor warm-up period begins. The combustion air inducer continues to operate at the ignition speed.

4 - After the 20-second warm-up period has ended, the gas valve is energized and ignition occurs.At the same time, the control module begins an indoor blower 45-second ON delay. When the delay ends, the indoor blower motor is energized at a speed that matches the firing rate. After the 10-second ignition stabilization delay expires, the inducer speed is adjusted to the appropriate target rate. If the furnace is operating in the initial heating cycle after power-up, the initial firing rate will be approximately 35 percent. The firing rate on subsequent cycles will be automatically adjusted by the integrated control based on thermostat cycles. The firing rate will vary and will range from 35 percent to 90 percent. The furnace will continue this operation as long as the thermostat has a first-stage heating demand.

5 - If second-stage heat is required, the thermostat second- stage heat contacts close and send a signal to the integrated control. The integrated control either increases the firing rate to 70 percent (if the current rate is at or below 60 percent) or increases the firing rate by 10 percent (if the current rate is above 60 percent). If the call for heat continues 5 minutes beyond this initial upstage, the rate will be increased by 10 percent every 5 minutes until the call for heat is satisfied or the furnace reaches 100 percent rate. As the firing rate increases, the indoor blower motor is adjusted to a speed which is appropriate for the target rate.

6 - If second-stage heat demand is satisfied, but first stage is still present, the furnace will continue to operate at the present firing rate until the heat cycle ends.

7 - When the demand for first- and second-stage heat is satisfied, the gas valve is de-energized and the fieldselected indoor blower off delay begins. The combustion air inducer begins a 20-second post-purge period.

8 - When the combustion air post-purge period is complete, the inducer is de-energized. The indoor blower is de-energized at the end of the off delay.

Applications Using A Single-Stage Thermostat

C - Heating Sequence -- Control Thermostat Selection DIP switch in "Single-Stage" Position

1 - On a call for heat, thermostat first-stage contacts close sending a signal to the integrated control. The integrated control runs a self-diagnostic program and checks high temperature limit switches for normally closed contacts and pressure switches for normally open contacts. The combustion air inducer is energized at the ignition speed, which is approximately the same as the inducer speed at 70 percent firing rate.

2 - Once the control receives a signal that the low-fire pressure switch has closed, the combustion air inducer begins a 15-second pre-purge at the ignition speed.

3 - After the pre-purge is complete, a 20-second initial ignitor warm-up period begins. The combustion air inducer continues to operate at the ignition speed.

4 - After the 20-second warm-up period has ended, the gas valve is energized and ignition occurs, which initiates a 10-second ignition stabilization delay. At the same time, the control module sends a signal to begin an indoor blower 45-second ON delay. When the delay ends, the indoor blower motor is energized at a speed which is appropriate for the firing rate. After the 10-second igni tion stabilization delay expires, the inducer speed is adjusted to 35 percent speed. The integrated control also initiates a second-stage on delay (factory-set at 7 minutes; adjustable to 12 minutes).

5 - If the heating demand continues beyond the secondstage on delay, the integrated control energizes the combustion air inducer at 70 percent speed. The indoor blower motor is adjusted to a speed which matches the target rate. A fixed, 10-minute third-stage on delay is initiated.

6 - If the heating demand continues beyond the thirdstage on delay, the integrated control energizes the inducer at high speed. The indoor blower motor is adjusted to a speed which is appropriate for the target rate.

7 - When the thermostat heating demand is satisfied, the gas valve is de-energized and the combustion air inducer begins a 20-second post-purge. The field-selected indoor blower off delay begins.

8 - When the combustion air post-purge period is complete, the inducer is de-energized. The indoor blower is de-energized at the end of the off delay.

Service

⚠ WARNING

ELECTRICAL SHOCK, FIRE, OR EXPLOSION HAZARD.

Failure to follow safety warnings exactly could result in dangerous operation, serious injury, death or property damage. Improper servicing could result in dangerous operation, serious injury, death, or property damage. Before servicing, disconnect all electrical power to furnace. When servicing controls, label all wires prior to disconnecting. Take care to reconnect wires correctly. Verify proper operation after servicing.

⚠ WARNING

The blower access panel must be securely in place when the blower and burners are operating. Gas fumes, which could contain carbon monoxide, can be drawn into living space resulting in personal injury or death.

Annual Furnace Maintenance

At the beginning of each heating season, and to compl ith the Lennox Limited Warranty, your system should be checked as follows:

1 - Check wiring for loose connections, voltage at indoor unit and amperage of indoor motor.

2 - Inspect the Low GWP sensor / sensors and rubber sleeve.

3 - Check the condition of the belt and shaft bearings if applicable.

4 - Inspect all gas pipe and connections for leaks.

5 - Check the cleanliness of filters and change if necessary (monthly).

6 - Check the condition and cleanliness of burners and heat exchanger and clean if necessary.

7 - Check the cleanliness of blower assembly and clean the housing, blower wheel and blower motor if necessary.

8 - Inspect the condensate drain and trap for leaks and cracks. The drain and trap must also be cleaned and the trap must be primed with water. Inspect the rubber hoses connected to the pressure switches for cracks or loose connections, replace as necessary. Remove the rubber hoses from the cold end header box and inspect for any blockage, clean as needed. If strainers are installed in the hoses remember to remove and clean before reinstalling the hoses.

9 - Evaluate the heat exchanger integrity by inspecting the heat exchanger per the AHRI heat exchanger inspection procedure. This procedure can be viewed at www.ahrinet.org

10 - Ensure sufficient combustion air is available to the furnace. Fresh air grilles and louvers (on the unit and in the room where the furnace is installed) must be properly sized, open and unobstructed to provide combustion air.

11 - On condensing furnaces, inspect the furnace intake and exhaust pipes to make sure they are in place, structurally sound, without holes, blockage or leakage and the exhaust pipe is sloped toward the furnace. Inspect terminations to ensure they are free of obstructions and are structurally sound. Inspect the furnace return air duct connection to ensure the duct is sealed to the furnace. Check for air leaks on supply and return ducts and seal where necessary.

12 - Inspect the furnace return air duct connection to ensure the duct is sealed to the furnace. Check for air leaks on supply and return ducts and seal where necessary.

13 - Check the condition of the furnace cabinet insulation and repair if necessary.

14 - Perform a complete combustion analysis during the furnace inspection to ensure proper combustion and operation. Consult Service Literature for proper combustion values.

15 - Verify operation of CO detectors and replace batteries as required.

Perform a general system test. Turn on the furnace to check operating functions such as the start-up and shut-off operation.

1 - Check the operation of the ignition system, inspect and clean flame sensor. Check microamps before and after. Check controls and safety devices (gas valve, flame sensor, temperature limits). Consult Service Manual for proper operating range. Thermal Limits should be checked by restricting airflow and not disconnecting the indoor blower. For additional details, please see Service and Application Note H049.

2 - Verify that system total static pressure and airflow settings are within specific operating parameters.

3 - Clock gas meter to ensure that the unit is operating at the specified firing rate for each stage of operation. Check supply, manifold and signal pressures at 35, 70 and 100% capacity as outlined in the unit Service Literature. If manifold pressure adjustment is necessary, consult the Service Literature for unit specific information on adjusting gas pressure. Not all gas valves are adjustable. Verify correct temperature rise.

NOTE - *After any heavy snow, ice or frozen fog event the furnace vent pipes may become restricted. Always check the vent system and remove any snow or ice that may be obstructing the plastic intake or exhaust pipes.*

Winterizing and Condensate Trap Care.

1 - Turn off power to the unit.

2 - Have a shallow pan ready to empty condensate water.

3 - Remove the drain plug from the condensate trap and empty water. Inspect the trap then reinstall the drain plug and refill trap with water. Cleaning the Burner Assembly

1 - Turn off electrical and gas power supplies to furnace. Remove upper and lower furnace access panels.

2 - Disconnect the 2-pin plug from the gas valve.

3 - Remove the burner box cover.

4 - Disconnect the gas supply line from the gas valve. Remove gas valve/manifold assembly.

5 - Mark and disconnect sensor wire from the sensor. Disconnect2-pin plug from the ignitor at the burner box.

6 - Remove four screws which secure burner box assembly to vest panel. Remove burner box from the unit.

7 - Use the soft brush attachment on a vacuum cleaner to gently clean the face of the burners. Visually inspect the inside of the burners and crossovers for any blockage caused by foreign matter. Remove any blockage.

8 - Reconnect the sensor wire and reconnect the 2-pin plug to the ignitor wiring harness.

9 - Reinstall the burner box assembly using the existing four screws. Make sure that the burners line up in the center of the burner ports.

10 - Reinstall the gas valve manifold assembly. Reconnect the gas supply line to the gas valve. Reinstall the burner box cover.

3 - Reconnect 2-pin plug to gas valve.

4 - Replace the blower compartment access panel.

5 - Refer to instruction on verifying gas and electrical connections when re-establishing supplies.

6 - Follow lighting instructions to light and operate furnace for 5 minutes to ensure that heat exchanger is clean and dry and that furnace is operating properly.

7 - Replace heating compartment access panel.

Repair Parts

The following repair parts are available through Lennox dealers. When ordering parts, include the complete furnace model number listed on the nameplate -- Example: SLP99DF070V36BK. **All service must be performed by a licensed professional installer (or equivalent), service agency, or gas supplier.**

Cabinet Parts

Outer access panel
Blower access panel
Top cap

Control Panel Parts

Transformer
Integrated control
Door interlock switch
Circuit breaker

Blower Parts

Blower wheel
Motor
Motor mounting frame
Blower housing cut-off plate

Heating Parts

Flame sensor
Heat exchanger assembly
Gas manifold
Combustion air inducer
Gas valve
Main burner cluster
Main burner orifices
Pressure switches
Ignitor
Primary limit control
Flame rollout switches

Refrigerant Detection System Parts

Refrigerant Detection Sensor
Refrigerant Line Set Sleeve

Configuring Unit Size Codes

Power-Up - Number displayed represents by integrated control unit size code (furnace model and capacity). If three horizontal bars are displayed followed by continuous E203, furnace control does not recognize **unit size code.** Configure per the following:

Furnace control in **IDLE** mode No heating, cooling or indoor fan operation)

Yes

No

Turn room thermostat to **OFF**

To enter **Field Test Mode:** push and hold button next to 7-segment LED display until **solid dash** symbol appears. Release button.

If alarm is present, furnace control will display error code. If alarm is not present solid **dash** starts blinking on 7-segment LED display.

Push and hold button until the solid **P** symbol is displayed on the 7-segment LED. Release button. This mode allows the user to select a unit size code number that matches the furnace model size and capacity.

***IMPORTANT**: Field replacement controls may need to be manually configured to validate furnace unit size code.*

Solid **P** starts blinking on 7-Segment LED

Push and hold button. Integrated control will display unit size code number for each furnace model for five seconds.

UNIT SIZE CODE	FURNACE MODEL
H	SLP99DFXV-070-36B
J	SLP99DFXV-090-36C
L	SLP99DFXV-090-48C
n	SLP99DFXV-090-60C
o	SLP99DFXV-110-60C

When the correct unit size code is displayed, release button. Selected code will flash for 10-second period. During that period, hold push button until code stops blinking (disappear for 2 seconds). Integrated control will store code in memory and will automatically exit **Field Test Mode** and reset. (If second period expires or push button is held less than five seconds, control will automatically exit **Field Test Mode** and go into **IDLE** mode without storing unit size code. If this happens, programming function must be repeated).

Verify that the selected unit size code is correct and stored in non-volatile memory by cycling the 24 volt power to the furnace control. (At 24 volt power-up of the furnace control, the 7-segment LED will display a unit size code. If three horizontal bars display, board does not recognize unit size code. Programming function must be repeated)

FINISHED

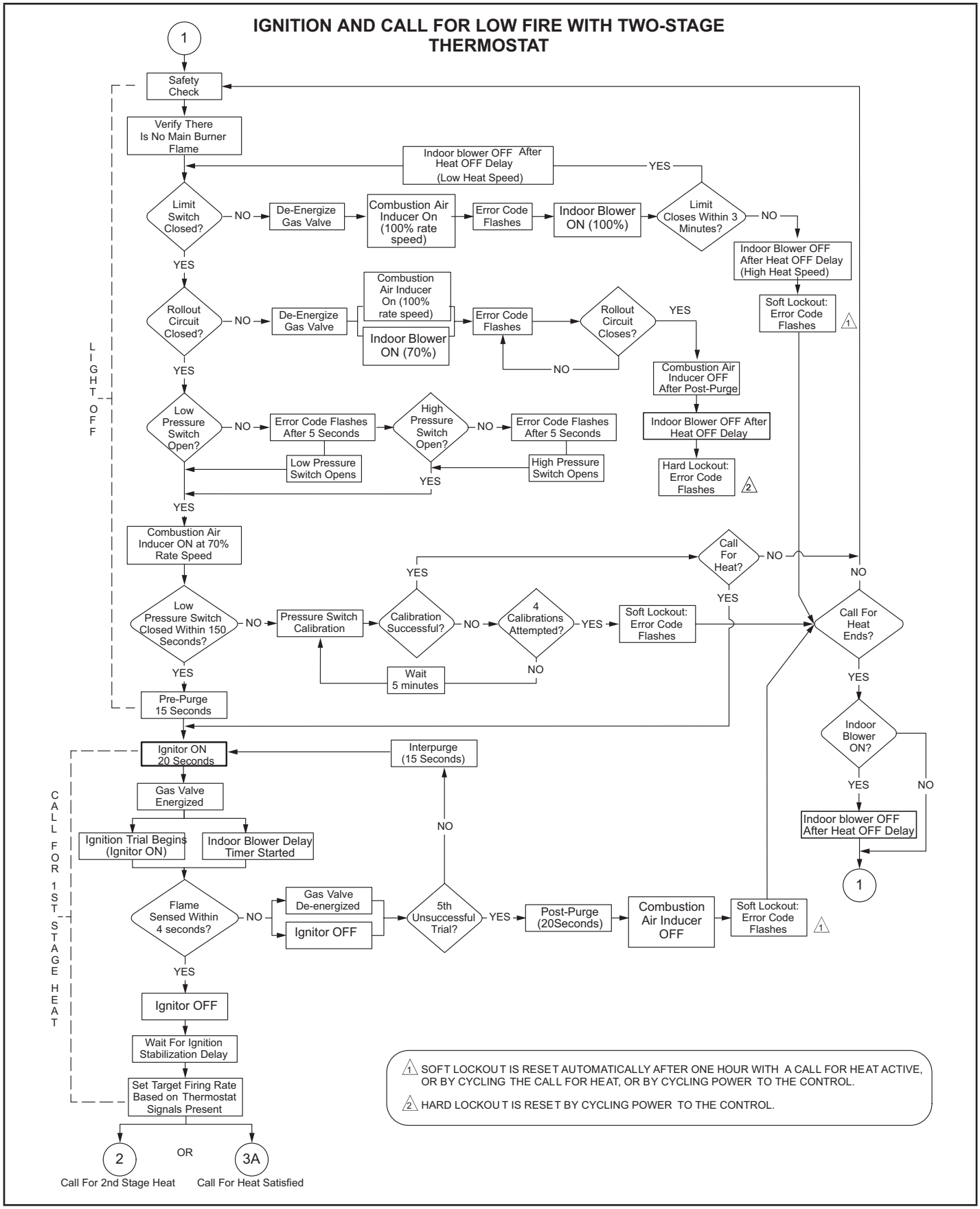
IGNITION AND CALL FOR LOW FIRE WITH TWO-STAGE THERMOSTAT
1
Safety Check
Verify There Is No Main Burner Flame
Indoor blower OFF After Heat OFF Delay (Low Heat Speed)
YES
Limit Switch Closed?
NO
De-Energize Gas Valve
Combustion Air Inducer On (100% rate speed)
Error Code Flashes
Indoor Blower ON (100%)
Limit Closes Within 3 Minutes?
NO
Indoor Blower OFF After Heat OFF Delay (High Heat Speed)
Soft Lockout: Error Code Flashes
1
YES
Rollout Circuit Closed?
NO
De-Energize Gas Valve
Combustion Air Inducer On (100% rate speed)
Indoor Blower ON (70%)
Error Code Flashes
Rollout Circuit Closes?
YES
NO
Combustion Air Inducer OFF After Post-Purge
Indoor Blower OFF After Heat OFF Delay
Hard Lockout: Error Code Flashes
2
YES
Low Pressure Switch Open?
NO
Error Code Flashes After 5 Seconds
High Pressure Switch Open?
NO
Error Code Flashes After 5 Seconds
Low Pressure Switch Opens
High Pressure Switch Opens
YES
YES
Combustion Air Inducer ON at 70% Rate Speed
Call For Heat?
NO
YES
YES
NO
Low Pressure Switch Closed Within 150 Seconds?
NO
Pressure Switch Calibration
Calibration Successful?
NO
4 Calibrations Attempted?
YES
Soft Lockout: Error Code Flashes
Call For Heat Ends?
YES
Wait 5 minutes
NO
YES
Pre-Purge 15 Seconds
Indoor Blower ON?
YES
NO
Indoor blower OFF After Heat OFF Delay
1
Ignitor ON 20 Seconds
Interpurge (15 Seconds)
Gas Valve Energized
NO
Ignition Trial Begins (Ignitor ON)
Indoor Blower Delay Timer Started
Flame Sensed Within 4 seconds?
NO
Gas Valve De-energized
Ignitor OFF
5th Unsuccessful Trial?
YES
Post-Purge (20Seconds)
Combustion Air Inducer OFF
Soft Lockout: Error Code Flashes
1
YES
Ignitor OFF
Wait For Ignition Stabilization Delay
Set Target Firing Rate Based on Thermostat Signals Present
2
OR
3A
Call For 2nd Stage Heat
Call For Heat Satisfied
LIGHT OFF
CALL FOR 1ST STAGE HEAT
1 SOFT LOCKOUT IS RESET AUTOMATICALLY AFTER ONE HOUR WITH A CALL FOR HEAT ACTIVE, OR BY CYCLING THE CALL FOR HEAT, OR BY CYCLING POWER TO THE CONTROL.
2 HARD LOCKOUT IS RESET BY CYCLING POWER TO THE CONTROL.

CALL FOR HIGH FIRE WITH TWO-STAGE THERMOSTAT

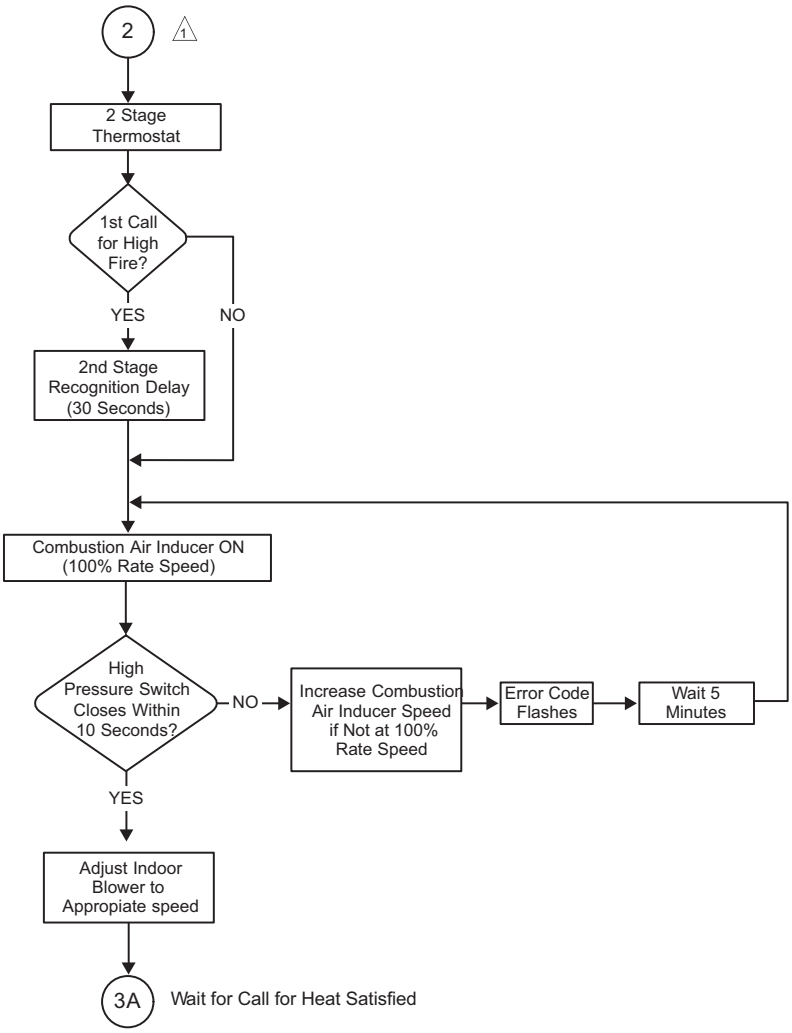

1 System will always light at 70% even if 2nd stage call for heat is in place

2 If the high pressure switch does not close within 5 attempts, the system will operate at low fire for the remainder of the call for heat at request

CALL FOR HEAT SATISFIED

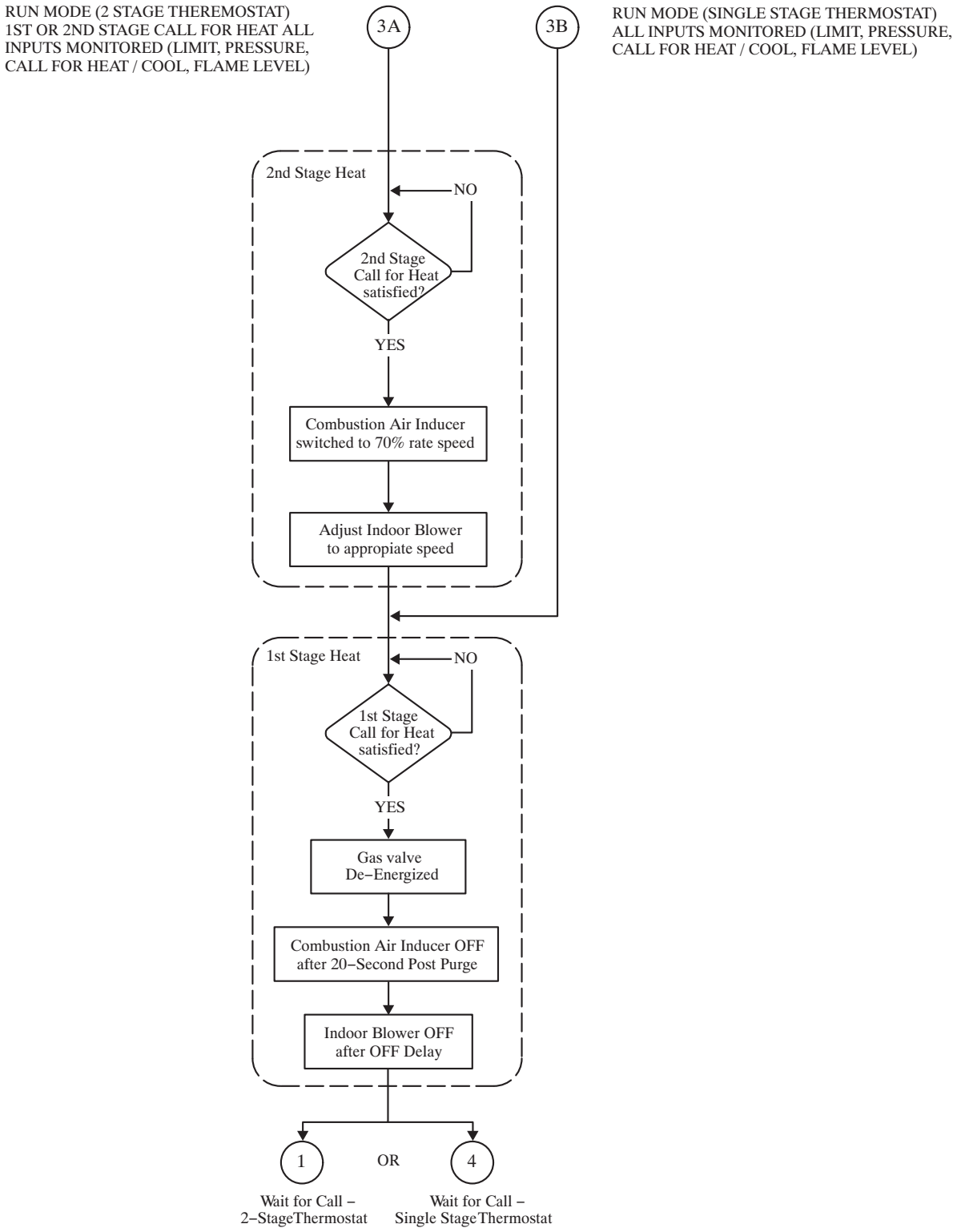

IGNITION AND CALL FOR HEAT WITH SINGLE-STAGE THERMOSTAT

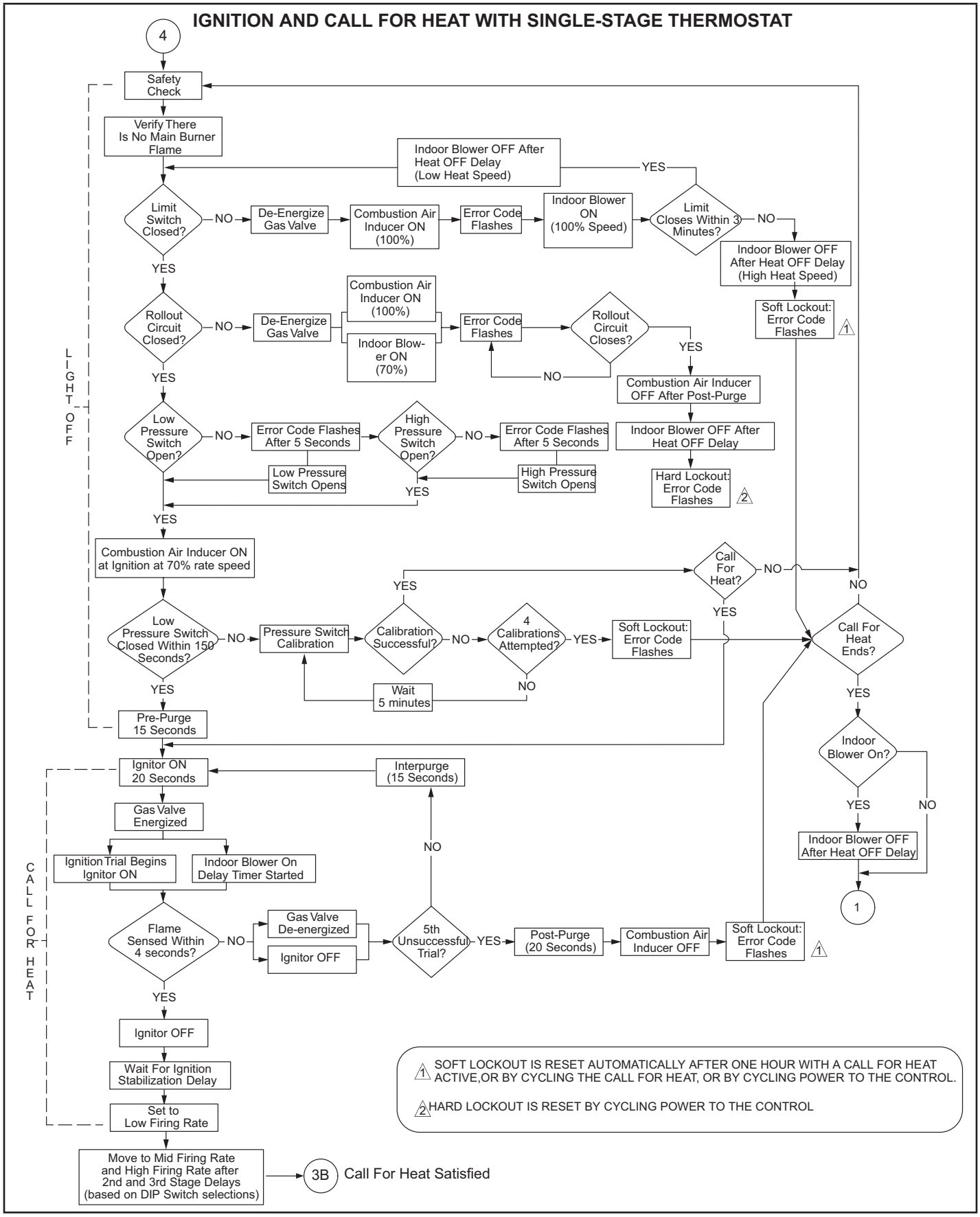

CALL FOR COOLING

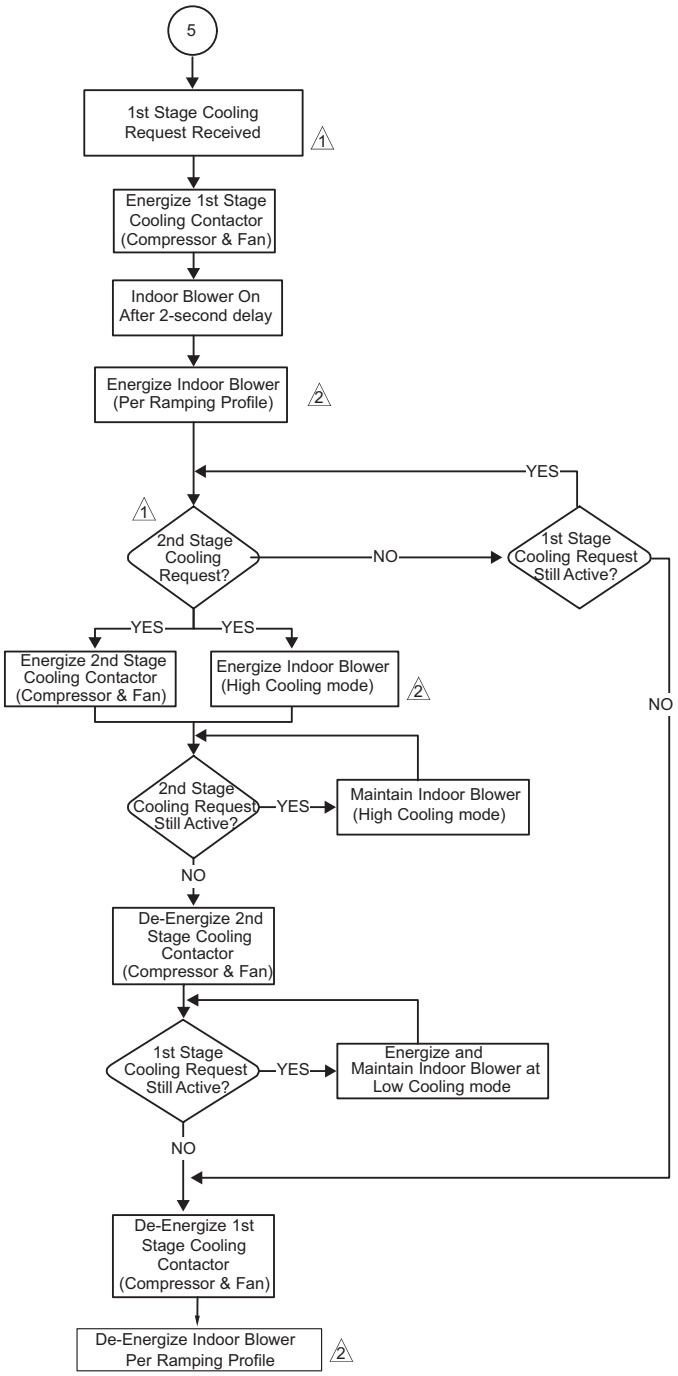

1 2nd stage cooling operation requires a 2-stage thermostat, a 2-stage cooling system and on-board link W915 must be be cut. The control will not respond to a 2nd stage cooling request unless a 1st stage cooling request is active

2 Indoor blower cooling mode and high cooling mode have a specific ON, OFF and speed ramping profiles. The specific profile is selected using the DIP switches on the control.

CONTINUOUS LOW SPEED INDOOR BLOWER SEQUENCE OF OPERATION

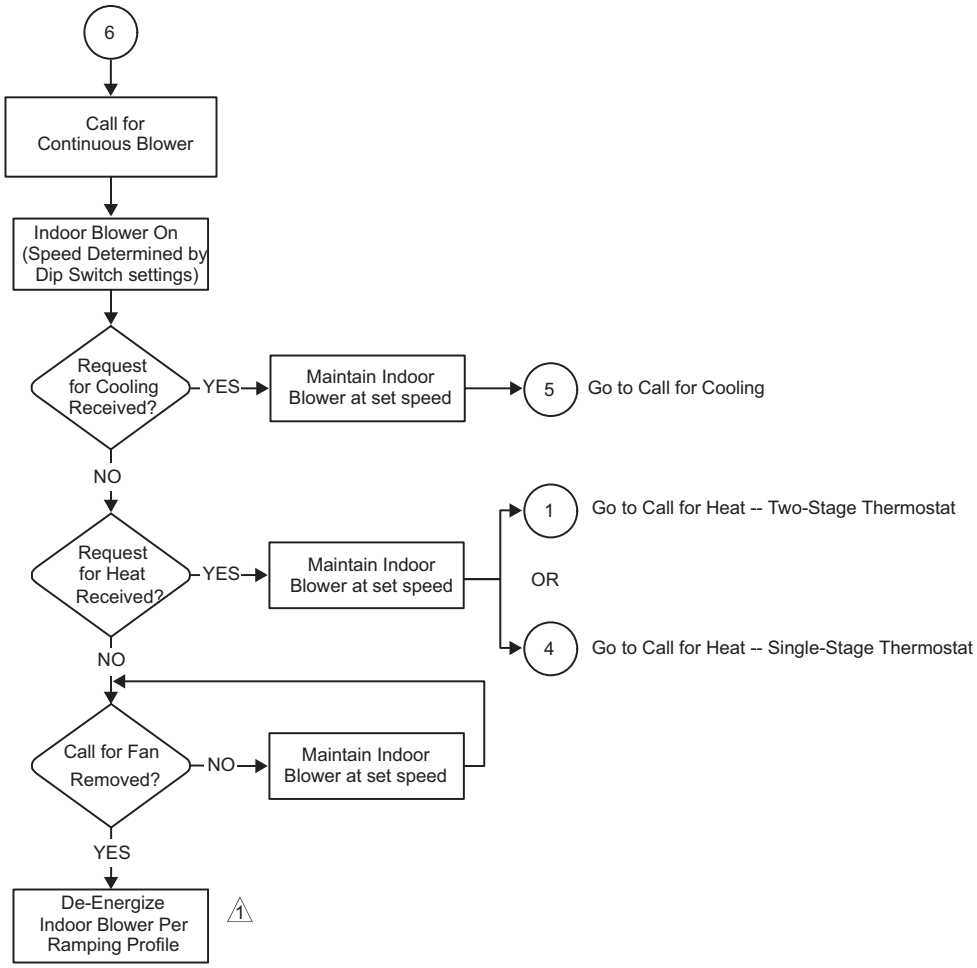

1 Indoor blower low cooling mode and high cooling mode, have specific ON - OFF and speed ramping profiles. The specific profile is selected using the dip switches on the control.

Modifications to NFPA-54, Chapter 10

Revise NFPA-54 section 10.8.3 to add the following requirements:

For all side wall, horizontally vented, gas-fueled equipment installed in every dwelling, building or structure used in whole or in part for residential purposes, including those owned or operated by the Commonwealth and where the side wall exhaust vent termination is less than seven (7) feet above the finished grade in the area of the venting, including but not limited to decks and porches, the following

Requirements shall be satisfied:

1 - INSTALLATION OF CARBON MONOXIDE DETECTORS. At the time of installation of the side wall, horizontally vented, gas-fueled equipment, the installing plumber or gas fitter shall observe that a hard-wired carbon monoxide detector with an alarm and battery backup is installed on the floor level where the gas equipment is to be installed. In addition, the installing plumber or gasfitter shall observe that a battery-operated or hard-wired carbon monoxide detector with an alarm is installed on each additional level of the dwelling, building or structure served by the side wall, horizontally vented, gas-fueled equipment. It shall be the responsibility of the property owner to secure the services of qualified licensed professionals for the installation of hard-wired carbon monoxide detectors.

a. In the event that the side wall, horizontally vented, gas-fueled equipment is installed in a crawl space or an attic, the hard-wired carbon monoxide detector with alarm and battery back-up may be installed on the next adjacent floor level.

b. In the event that the requirements of this subdivision cannot be met at the time of completion of installation, the owner shall have a period of thirty (30) days to comply with the above requirements; provided, however, that during said thirty (30) day period, a battery-operated carbon monoxide detector with an alarm shall be installed.

2 - APPROVED CARBON MONOXIDE DETECTORS. Each carbon monoxide detector as required in accordance with the above provisions shall comply with NFPA 720 and be ANSI/UL 2034 listed and IAS certified.

3 - SIGNAGE. A metal or plastic identification plate shall be permanently mounted to the exterior of the building at a minimum height of eight (8) feet above grade directly in line with the exhaust vent terminal for the horizontally vented, gas-fueled heating appliance or equipment. The sign shall read, in print size no less than one-half (1/2) inch in size, “GAS VENT DIRECTLY BELOW. KEEP CLEAR OF ALL OBSTRUCTIONS.”

4 - INSPECTION. The state or local gas inspector of the side wall, horizontally vented, gas-fueled equipment shall not approve the installation unless, upon inspection, the inspector observes carbon monoxide detectors and signage installed in accordance with the provisions of 248 CMR 5.08(2)(a) 1 through 4.

EXEMPTIONS: The following equipment is exempt from 24 CMR 5.08(2)(a) 1 through 4:

1 - The equipment listed in Chapter 10 entitled “Equipment Not Required to Be Vented” in the most current edition of NFPA 54 as adopted by the Board; and

2 - Product Approved side wall, horizontally vented, gasfueled equipment installed in a room or structure separate from the dwelling, building or structure used in whole or in part for residential purposes.

MANUFACTURER REQUIREMENTS -

GAS EQUIPMENT VENTING SYSTEM PROVIDED.

When the manufacturer of Product Approved side wall, horizontally vented, gas-fueled equipment provides a venting system design or venting system components with the equipment, the instructions provided by the manufacturer for installation of the equipment and the venting system shall include:

1 - Detailed instructions for the installation of the venting system design or the venting system components: and

2 - A complete parts list for the venting system design or venting system.

MANUFACTURER REQUIREMENTS -

GAS EQUIPMENT VENTING SYSTEM NOT PROVIDED.

When the manufacturer of Product Approved side wall, horizontally vented, gas-fueled equipment does not provide the parts for venting the flue gases, but identifies “special venting systems,” the following requirements shall be satisfied by the manufacturer:

1 - The referenced “special venting system” instructions shall be included with the appliance or equipment installation instructions; and

2 - The “special venting systems” shall be Product Approved by the Board, and the instructions for that system shall include a parts list and detailed installation instructions.

A copy of all installation instructions for all Product Approved side wall, horizontally vented, gas-fueled equipment, all venting instructions, all parts lists for venting instructions, and/or all venting design instructions shall remain with the appliance

FOR THE PROVINCE OF ONTARIO, HORIZONTAL SIDEWALL VENT APPLICATIONS ONLY

For exterior horizontal venting applications, the 2” X 1.5” reducer for 2” venting at the point where the exhaust pipe exits the structure is not required in direct or nondirect vent applications in the Province of Ontario. In these applications, the vent should be oriented such that the exhaust plume is unobjectionable. If the installation requires more separation between the flue gases and the building structure, a reducer may be installed on the exhaust pipe to increase the flue gas velocity.

ADDENDUM FOR ALL PROVINCES OF CANADA

See below for venting for all provinces of Canada. Lennox approves the following termination for use in all provices of Canada.

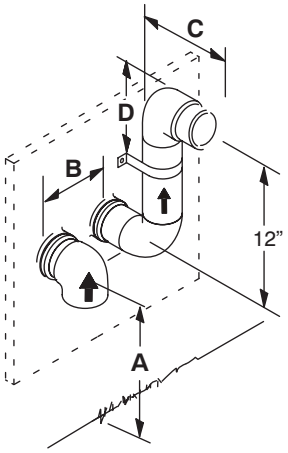

	2” (51MM) Vent Pipe	3” (76MM) Vent Pipe
A – Clearance above grade or average snow accumulation	12” (305 mm) Min.	12” (305 mm) Min.
B – Horizontal separation between intake and exhaust	6” (152 mm) Min. 24” (610 mm) Max.	6” (152 mm) Min. 24” (610 mm) Max.
C – Exhaust pipe length	Per: Saskatchewan Code of Practice	
D – Wall support distance from top of each pipe (intake/exhaust)	6” (152 mm) Max.	6” (152 mm) Max.

NOTE – Flue gas may be acidic and may adversely affect some building materials. If flue gases impinge on the building materials, a corrosion–resistant shield should be used to protect the wall surface. The shield should be constructed using wood, sheet metal or other suitable material. All seams, joints, cracks, etc. in affected area, should be sealed using an appropriate sealant.