PACKAGED GAS / ELECTRIC

LRP14GN

Ultra-Low NOx
Constant Torque Blower Motor - R-410A - 60 Hz

RESIDENTIAL
PRODUCT SPECIFICATIONS

Bulletin No. 210922
March 2024
Supersedes All previous versions

SEER2 - 13.4 / SEER - 14.0
AFUE - 81%
2 to 5 Tons
Cooling Capacity - 22,600 to 57,500 Btuh
Input Gas Heating Capacity - 54,000 to 72,000 Btuh

MODEL NUMBER IDENTIFICATION

L RP 14 G N 36 - 054 E P - 3 - A

Brand
L = Lennox

Product Type
RP = Residential Packaged Unit

Nominal Efficiency

Unit Type
G = Packaged Gas/Electric Unit

Ultra-Low NOx
N = Units meet California Nitrogen Oxides Standard (14ng/J)

Nominal Cooling Capacity
24 = 2 tons
30 = 2.5 tons
36 = 3 tons
42 = 3.5 tons
48 = 4 tons
60 = 5 tons

Minor Revision Sequence
A = 1st Generation

Major Revision Sequence
3 = 3rd Generation

Voltage
P = 208/230V-1phase-60Hz

Blower
E = High Efficiency Constant Torque Blower Motor

Nominal Heating Capacity Input
054 = 54,000 Btuh
072 = 72,000 Btuh

NOTE - ALL MODELS ARE NATURAL GAS ONLY!

NOTE - NOT AVAILABLE IN ALL AREAS!
CONTACT YOUR NEAREST LENNOX SALES OFFICE FOR DETAILS.

CONTENTS

Approvals And Warranty 2
Blower Data 12
Cooling Ratings - 2017 10
Cooling Ratings - 2023 11
Dimensions 14
- Accessories 15
- Unit 14
Electrical Data 7
Features 3
Field Wiring 9
High Altitude Derate 9
Installation Clearances 9
Minimum Clearance To Combustible Material 9
Optional Accessories - Order Separately 8
Specifications 7
Specifications - Gas Heat 9

APPROVALS AND WARRANTY

APPROVALS

- AHRI Standard 210/240 Certified
- Design Certified by ETL Intertek
- Cooling system rated according to DOE test procedures
- Heating ratings are Certified by AHRI according to U.S. Department of Energy (DOE) test procedures and Federal Trade Commission (FTC) labeling regulations
- Approved by the California Energy Commission and meets California Nitrogen Oxides Standard (NOx) limits of 14 ng/J

California Only

- These units **meet** the South Coast Air Quality Management District (SCAQMD) Rule 1111 and San Joaquin Valley Air Pollution Control District (SJVAPCD) Rule 4905 NOx emission limit (14 ng/J) and can be installed within the SCAQMD, SJVAPCD and Bay area
- Units are ETL Certified for the U.S. and Canada
- All models with the Optional Seismic Strapping Kit installed have Seismic Certification for 2018 International Building Code (IBC) and 2019 California Building Code (CBC) ASCE 7
- Unit and components are UL bonded for grounding to meet safety standards for servicing
- Test operated at the factory before shipment ensuring dependable operation at start-up

WARRANTY

- Heat Exchanger:
  - Limited twenty years in residential applications
  - Limited ten years in non-residential applications
- Compressor:
  - Limited ten years in residential installations
  - Limited five years in non-residential installations
- All other covered components:
  - Limited five years in residential installations
  - Limited one year in non-residential installations

NOTE - Refer to Lennox Equipment Limited Warranty certificate included with unit for specific details.

FEATURES

APPLICATIONS

- Designed for outdoor installations at ground level or rooftop for residential applications

HEATING SYSTEM

Heat Exchanger Assembly
- Heavy gauge stainless steel heat exchanger
- Tubular type design
- Designed for normal expansion and contraction
- Round surfaces create minimum resistance to air flow for excellent heat transfer
- Heat exchanger has been laboratory life cycle tested in excess of industry standards
- Compact size of heat exchanger permits low overall design of furnace cabinet

Burner Orifice/Air Intake Assembly
- Burner assembly has a single orifice located between the gas valve and the air intake assembly
- Orifice is precisely matched to the burner input

Direct Spark Ignition
- Provides positive and safe main burner ignition
- Spark is intermittent and occurs only when required

Modulating Gas Control Valve
- 24 volt redundant combination modulating gas control valve combines manual shut off switch (On-Off), automatic electric valve (dual) and gas pressure regulation into a compact combination control

Variable-Speed Combustion Air Inducer
- Heavy duty variable-speed blower prepurges heat exchanger and safely vents flue products
- Pressure switch proves blower operation before allowing gas valve to open
- Operates only during heating cycle

NOTE - Inducer operates the first 10 seconds of each cooling cycle to keep flue outlet clear during the cooling season.

Thermal Switch
- Factory installed on air/fuel intake assembly
- Automatic reset
- Switch provides protection from abnormal operating conditions

Limit Control
- Factory installed behind heat exchanger access panel
- Automatic reset

Ignition Control Board
- Ignition control board with LED diagnostics

REFRIGERATION SYSTEM

R-410A Refrigerant
- Non-chlorine, ozone friendly
- Unit is factory pre-charged

Evaporator and Condenser Coils
- Copper tube with aluminum fin coils

Anti-Microbial Evaporator Coil Drain Pan
- Anti-Microbial additive resists growth of mold and mildew on drain pan which improves indoor air quality and reduces drain line blockage
- Fully insulated to reduce condensation
- Drain pan overflow switch monitors condensate level in drain pan and shuts down unit if drain becomes clogged

Condenser Fan
- Weather protected heavy duty condenser fan motor
- Coated steel fan blades for long life
- Corrosion-resistant coated steel fan guard
- Internally mounted
- Totally enclosed fan motor

High Pressure Switch
- Protects the system from high pressure conditions
- Automatic reset

Loss of Charge Switch
- Shuts off unit if suction pressure falls below setting
- Loss of charge and freeze-up protection

Service Valves
- Fully serviceable brass valves installed in discharge and liquid lines

FEATURES

COMPRESSOR

- Rotary Compressor furnished on 24 and 30 models
- Scroll Compressor furnished on 36 through 60 models
- High volumetric efficiency
- Uniform suction flow
- Constant discharge flow
- Quiet operation
- Low gas pulses during compression reduces operational sound levels
- Compressor motor is internally protected from excessive current and temperature
- Compressor is installed in the unit on resilient rubber mounts for vibration free operation

Rotary Compressor Operation

- Rotary compressor has a cylindrical chamber
- A roller is mounted to the motor shaft and is offset to rotate in the center of the chamber
- Two spring-loaded vanes sweep the sides of the chamber as the roller rotates
- Roller touches the chamber at a point between the intake and the discharge ports as the roller rotates
- While rotating, the roller draws vapor into the chamber through the intake port
- Vapor is trapped in the space between the chamber wall, the vane, and the point of contact between the roller and the chamber
- As the next vane passes the contact point vapor is compressed
- The space becomes smaller compressing the vapor as the roller rotates
- Vapor is discharged through the discharge port

Scroll Compressor Operation

- Two involute spiral scrolls matched together generate a series of crescent-shaped gas pockets between them
- During compression, one scroll remains stationary while the other scroll orbits around it
- Gas is drawn into the outer pocket, the pocket is sealed as the scroll rotates
- As the spiral movement continues, gas pockets are pushed to the center of the scrolls
- Volume between the pockets is simultaneously reduced
- When the pocket reaches the center, gas is now at high pressure and is forced out of a port located in the center of the fixed scrolls
- During compression, several pockets are compressed simultaneously resulting in a smooth continuous compression cycle
- Continuous flank contact, maintained by centrifugal force, minimizes gas leakage and maximizes efficiency
- Compressor is tolerant to the effects of slugging and contaminants
- If this occurs, scrolls separate, allowing liquid or contaminants to be worked toward the center and discharged
- Muffler in discharge line reduces operating sound levels

Optional Accessories

Compressor Crankcase Heater (36 through 60 models)

- Protects against refrigerant migration that can occur during low ambient operation

Compressor Hard Start Kit

- A PSC compressor motor does not normally need a potential relay and start capacitor
- In cases of low voltage, this kit may be required to increase the compressor starting torque

Compressor Timed-Off Control

- Prevents compressor short-cycling
- Allows time for suction and discharge pressure to equalize
- Permits compressor start-up in an unloaded condition
- Automatic reset
- Five minute delay between compressor shut-off and start-up

Low Ambient Kit (40°F)

- Cycles the outdoor fan while allowing compressor operation in the cooling cycle
- This intermittent fan operation allows the system to operate without icing the evaporator coil and losing capacity
- Designed for use in ambient temperatures no lower than 40°F

NOTE - A crankcase heater must be installed on the compressor.

SUPPLY AIR BLOWER

- Direct drive blower
- Blower wheel is statically and dynamically balanced
- Resiliently mounted
- Blower assembly easily removed for servicing

Constant Torque Blower Motor

- DC Brushless Motor
- High Efficiency Constant Torque
- ECM (Electronically Commutated Motor)
- Motor is programmed to provide constant torque at each of the selectable speeds
- Fixed blower “On” delay prevents cold air from entering system during gas heating demand
- See Blower Performance tables

AIR FILTER (required)

Internal Filter Rack Kits

- Available for 1 in. thick filters
- Filter rails mount internal to unit

NOTE - Filters must be field provided.

FEATURES

CONTROLS

24 Volt Transformer
- 40VA transformer furnished and factory installed in control area

Optional Accessories

M30 Smart Wi-Fi Thermostat
- Wi-Fi-enabled, electronic 7-day, universal, multi-stage, programmable, touchscreen thermostat
- 4 Heat/2 Cool
- Auto-changeover
- Dual-fuel control with optional outdoor sensor
- Controls dehumidification during cooling mode and humidification during heating mode

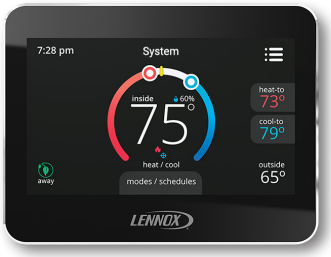

- Offers enhanced capabilities including humidification / dehumidification / dewpoint measurement and control, Humiditrol® control, and equipment maintenance reminders
- Easy to read 4.3 in. color touchscreen (measured diagonally)
- LCD display with backlight shows the current and set temperature, time, inside relative humidity, system status (operating mode and schedules) and outside temperature (optional outdoor sensor required)
- Smooth Setback Recovery starts system early to achieve setpoint at start of program period
- Compressor short-cycle protection (5 minutes)
- Up to four separate schedules are available plus Schedule IQ™
- One-Touch Away Mode - A quick and easy way to set the cooling and heating setpoints while away
- Smart Away™ - Uses geo-fencing technology to determine when the homeowner is within a predetermined distance from the home to operate the system when leaving, away and arriving
- Wi-Fi remote monitoring and adjustment through a home wireless network for desktop PCs, laptops and apps for smartphones or tablets
- Smart home automation compatible with Amazon Alexa®, Google Assistant and IFTTT
- Service Dashboard features online real-time monitoring of installed Lennox® thermostats

NOTE - See the Lennox® M30 Smart Wi-Fi Thermostat Product Specifications bulletin in the Controls section for more information.

Remote Outdoor Temperature Sensor

- Used with the Lennox® M30 Smart Wi-Fi Thermostat
- Outdoor sensor allows thermostat to display outdoor temperature

Thermostat
- Thermostat is not furnished with unit
- Lennox Price Book for selection

FEATURES

CABINET

- Conditioned areas insulated with foil faced insulation
- Minimizes heat loss and reduce operating sound levels
- Powder paint for maximum durability
- Easy service access
- Steel louvered panels provides complete coil protection
- Full perimeter heavy-gauge galvanized steel base rail
- Base rails have rigging holes
- Two sides of the base rail have forklift slots
- Raised edges around duct and power entry openings in the bottom of the unit for water protection

Airflow Choice

- Units are shipped with all air openings sealed
  - For downflow (vertical) applications, remove the downflow duct covers
  - For horizontal applications, remove the horizontal duct covers

Gas Piping Inlets, Electrical Inlets and Service Valves

- Standard gas piping and field wiring inlets are located in one central area of the cabinet
- See dimension drawing
- Gauge ports are located inside the cabinet

Optional Accessories

Base Rail Opening Closure Kit

- Kit consists of panels and hardware to cover base rail rigging holes and forklift slot openings

Bottom Gas Entry Kit

- Allows gas piping through the unit base pan

Bottom Power Entry Kit

- Allows field wiring through the unit base pan

Rectangular to Round Duct Adaptor Kits

- Downflow or horizontal kits available
- Converts rectangular supply and return air openings on unit cabinet to round diameter
- Several sizes available

Clip Curb (Full Perimeter)

- Interlocking tabs fasten corners together
- No tools required
- Fully gasketed around curb perimeter and supply and return openings
- Available in 8, 14, 18 and 24 inch heights
- Shipped knocked down

Adjustable Pitch Roof Curb (Full Perimeter)

- Fully adjustable pitch curb provides a level platform for packaged units
- Allows flexible installations on roofs with sloped or uneven angles
- Adjustable from 2/12 to 6/12 pitch
- Fully gasketed around curb perimeter and supply and return openings
- Clip Curb (knock-down) and Welded models available

All Curbs

- IBC 2018 compliant
- CBC 2019 compliant
- Seismic rating - SDS 2.0g, z/h=1, Ip=1.5
- Wind rating - 240 mph (Lateral), 214 mph (Uplift)
- Maximum load rating - 800 lbs

Adaptor Curbs (not shown)

- Curbs are regionally sourced
- Dimensions vary based upon the source

NOTE - Contact your local sales representative for a detailed cut sheet with applicable dimensions.

Strapping Kit - Hurricane

- Galvanized steel .07 in. thick minimum
- Attaches unit base rails to host structure
- Separate kits available for Slab Mount or Rail Mount

Strapping Kit - Seismic

- Heavy-gauge galvanized steel
- Kit contains 4 brackets and mounting hardware

SPECIFICATIONS

General Data	Model No.	LRP14GN24	LRP14GN30	LRP14GN36	LRP14GN42	LRP14GN48	LRP14GN60
	Nominal Tonnage	**2**	**2.5**	**3**	**3.5**	**4**	**5**
Gas Heat Available - See Page Page 9		**-054**	**-054**	**-054**	**-072**	**-072**	**-072**
Cooling Performance	Total cooling capacity - Btuh	22,600	28,400	33,400	40,000	44,500	57,500
	[1] SEER2 (Btuh/Watt)	13.4	13.4	13.4	13.4	13.4	13.4
	[1] EER2 (Btuh/Watt)	10.6	10.6	10.6	10.6	10.6	10.6
	Total cooling capacity - Btuh	22,600	28,400	34,000	40,000	45,500	57,000
	[1] SEER (Btuh/Watt)	14.0	14.0	14.0	14.0	14.0	14.0
	[1] EER (Btuh/Watt)	11.0	11.0	11.0	11.0	11.0	11.0
	Total Unit Watts	2055	2580	3090	3635	4180	5180
[2] Sound Rating Number (dBA)		77	79	78	78	77	78
Refrigerant	Type	R-410A	R-410A	R-410A	R-410A	R-410A	R-410A
	Charge	4 lbs. 12 oz.	5 lbs. 0 oz.	5 lbs.1 oz.	5 lbs. 14 oz.	6 lbs. 11 oz.	8 lbs. 7 oz.
Condensate drain size (fpt) - in.		3/4	3/4	3/4	3/4	3/4	3/4
Outdoor Coil	Net Face Area - sq. ft.	14.6	16.4	16.4	19.5	19.5	16.6
	Tube Dia. - in. and No. of Rows	5/16 - 1	5/16 - 1	5/16 - 1	5/16 - 1	5/16 - 1	5/16 - 2
	Fins per inch	26	26	26	26	26	22
Outdoor Coil Fan	Motor horsepower	1/6	1/6	1/6	1/4	1/4	1/4
	Dia. - in. and No. of blades	22 - 4	22 - 4	22 - 4	24 - 3	24 - 3	24 - 3
Indoor Coil	Net Face Area - sq. ft.	4.4	4.4	4.4	6.8	6.8	6.8
	Tube Dia. - in. and No. of rows	3/8 - 2	5/16 - 3	5/16 - 3	5/16 - 3	5/16 - 3	3/8 - 3
	Fins per in.	16	16	15	15	15	15
Indoor Blower	Blower wheel size dia. x width - in.	10 x 6	10 x 6	10 x 8	10 x 10	10 x 10	12 x 10
	Motor horsepower	1/3	1/2	1/2	3/4	3/4	1
Net weight of basic unit - lbs.		407	414	430	522	525	557
Shipping weight of basic unit (1 Pkg.) - lbs.		412	419	435	527	530	562
Electrical characteristics (60 Hz)		208/230V-1ph-60Hz					

ELECTRICAL DATA

Line voltage data - 60Hz 1 phase		208/230V	208/230V	208/230V	208/230V	208/230V	208/230V
[3] Maximum Overcurrent Protection (MOCP) amps		20	25	35	40	45	50
[4] Minimum Circuit Ampacity (MCA)		14.4	18.2	22.7	26.1	29.3	35.8
Compressor	Rated load amps	8.5	10.5	14.1	14.7	17.3	22.2
	Locked rotor amps	43.5	47	72.2	113	103	127.9
Outdoor Coil Fan Motor	Full load amps	1.0	1.0	1.0	1.7	1.7	1.7
	Locked rotor amps	1.9	1.9	1.9	3.2	3.2	3.2
Indoor Blower Motor	Full load amps	2.8	4.1	4.1	6	6	6.3
	Locked rotor amps	3.9	3.9	4.4	5.4	6.8	- - -

NOTE-Shaded areas indicate AHRI 2023 Ratings.

NOTE-Extremes of operating range are plus and minus 10% of line voltage.

[1] AHRI Certified to AHRI Standard 210/240; 95°F outdoor air temperature, 80°F db/67°F wb entering evaporator air.

[2] Sound Rating Number rated in accordance with test conditions included in AHRI Standard 270.

[3] HACR type circuit breaker or fuse.

[4] Refer to National or Canadian Electrical Code manual to determine wire, fuse and disconnect size requirements.

OPTIONAL ACCESSORIES - ORDER SEPARATELY

Item		Catalog No.	Unit Model No. 24	30	36	42	48	60
CONTROLS								
M30 Smart Wi-Fi Thermostat		**15Z69**	•	•	•	•	•	•
[1] Remote Outdoor Temperature Sensor		**X2658**	•	•	•	•	•	•
COOLING SYSTEM								
Compressor Crankcase Heater		**11X27**			•	•	•	•
Compressor Hard Start Kit		**10J42**	•	•	•			•
		88M91				•	•	
Compressor Timed-Off Control		**47J28**	•	•	•	•	•	•
Low Ambient Kit (40°F)		**21D20**	•	•	•	•	•	•
CABINET								
Base Rail Opening Closure Kit		**21J84**	•	•	•	•	•	•
Rectangular to Round Duct Adaptor Kits	Downflow - 14 in. dia.	**20X82**	•	•	•			
	- 14 in. dia.	**21D26**				•	•	•
	Horizontal - 14 in. dia.	**21J92**	•	•	•			
	- 14 in. dia.	**21D24**				•	•	•
	- 16 in. dia.	**22U78**				•	•	•
	- 18 in. dia.	**22U79**				•	•	•
HEATING SYSTEM								
Bottom Gas Entry Kit		**22G63**	•	•	•	•	•	•
ELECTRICAL								
Bottom Power Entry Kit		**21J78**	•	•	•	•	•	•
INDOOR AIR QUALITY								
[2] Internal Filter Rack Kit (filters not furnished)	(1) 20 x 20 + (1) 14 x 20	**11U73**	•	•	•			
	(2) 20 x 20	**11U74**				•	•	•
ROOF CURBS								
Clip Curbs								
8 in height		**21J13**	•	•	•			
		21J17				•	•	•
14 in height		**21J14**	•	•	•			
		21J19				•	•	•
18 in height		**21J15**	•	•	•			
		21J20				•	•	•
24 in height		**21J16**	•	•	•			
		21J25				•	•	•
Adjustable Pitch Roof Curbs								
Welded Curbs		**22V54**	•	•	•			
		22V55				•	•	•
Clip Curbs		**21J26**	•	•	•			
		21U04				•	•	•
Strapping Kits for Roof Curbs								
Strapping Kit - Hurricane (Slab Mount)		**21J74**	•	•	•	•	•	•
Strapping Kit - Hurricane (Rail Mount)		**22C53**	•	•	•	•	•	•
Strapping Kit - Seismic		**21J75**	•	•	•	•	•	•

[1] Allows the thermostat to display outdoor temperature.
[2] Filters are not furnished and must be field provided.

SPECIFICATIONS - GAS HEAT

	Model	24, 30, 36	42, 48, 60
	Heating Input	**-054**	**-072**
Heating Capacity Btuh	Input	54,000	72,000
	Output	43,800	58,320
[1] AFUE		81%	81%
Temperature Rise - °F		30 - 60	25 - 55
Gas Supply Connection (FPT) - in.		1/2	1/2
Min. Recommended Gas Supply Pressure		5 in. w.g. Natural Gas	

[1] Annual Fuel Utilization Efficiency based on U.S. DOE test procedures and FTC labeling regulations.

HIGH ALTITUDE DERATE

Units may be installed at altitudes up to 4500 feet above sea level without any modification.
NOTE - Units are not approved for installation above 4500 feet.

FIELD WIRING

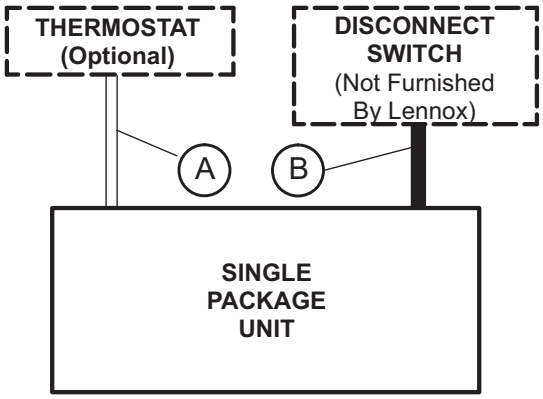

A − Five Wire Low Voltage (Electronic)

B − Two Wire Power (See Electrical Data Table)

− Field Wiring Not Furnished −

INSTALLATION CLEARANCES

	in.	mm
Front (heat exchanger access)	24	610
Right Side (blower access)	24	610
Left Side (evaporator coil access)	24	610
Back	0	0
Top	48	1219

MINIMUM CLEARANCE TO COMBUSTIBLE MATERIAL

	in.	mm
Front	0	0
Back	0	0
Right Side (vent cover)	12	305
Left Side	0	0
Top	0	0
Below Unit	0	0

COOLING RATINGS - 2017

Model No.	Indoor Temp DB/WB °F	Outdoor Temperature - DB														
		65°F			82°F			95°F			105°F			115°F		
		Btuh Output	S/T	kW Input	Btuh Output	S/T	kW Input	Btuh Output	S/T	kW Input	Btuh Output	S/T	kW Input	Btuh Output	S/T	kW Input
LRP14GN24	85/72	28,500	0.65	1.35	26,400	0.67	1.66	24,900	0.69	1.88	23,500	0.71	2.08	22,000	0.73	2.27
	80/67	26,300	0.70	1.37	24,300	0.72	1.66	22,600	0.75	1.88	21,600	0.77	2.06	20,200	0.79	2.25
	75/63	24,500	0.73	1.38	22,700	0.75	1.66	21,400	0.77	1.88	20,200	0.79	2.05	18,900	0.81	2.24
	75/57	22,600	0.96	1.39	21,000	0.99	1.66	20,000	1.00	1.87	19,000	1.00	2.04	17,900	1.00	2.22
LRP14GN30	85/72	36,800	0.65	1.84	33,600	0.68	2.19	31,400	0.71	2.46	29,600	0.73	2.67	27,500	0.75	2.88
	80/67	33,900	0.71	1.78	30,900	0.74	2.14	28,400	0.77	2.41	27,200	0.79	2.62	25,300	0.82	2.84
	75/63	31,600	0.73	1.73	28,800	0.76	2.09	27,000	0.79	2.37	25,400	0.81	2.58	23,600	0.84	2.79
	75/57	29,100	0.99	1.67	26,900	1.00	2.04	25,400	1.00	2.33	24,100	1.00	2.55	22,700	1.00	2.77
LRP14GN36	85/72	41,000	0.66	2.06	38,500	0.68	2.48	36,500	0.71	2.81	34,500	0.73	3.11	32,200	0.75	3.47
	80/67	37,900	0.72	2.07	35,600	0.74	2.48	34,000	0.77	2.80	31,800	0.79	3.10	29,600	0.81	3.44
	75/63	35,300	0.75	2.07	33,200	0.76	2.48	31,400	0.79	2.79	29,600	0.81	3.09	27,600	0.84	3.44
	75/57	32,700	1.00	2.08	30,900	1.00	2.48	29,500	1.00	2.78	28,100	1.00	3.08	26,400	1.00	3.43
LRP14GN42	85/72	50,300	0.67	2.48	46,700	0.69	3.04	44,200	0.71	3.46	41,600	0.73	3.83	38,600	0.76	4.25
	80/67	46,400	0.73	2.50	42,900	0.75	3.05	40,000	0.77	3.46	38,300	0.80	3.83	35,500	0.83	4.25
	75/63	43,200	0.75	2.51	40,000	0.77	3.05	38,100	0.80	3.46	35,800	0.82	3.83	33,100	0.85	4.26
	75/57	40,300	0.99	2.51	37,800	1.00	3.05	36,000	1.00	3.45	34,200	1.00	3.83	32,000	1.00	4.26
LRP14GN48	85/72	56,000	0.66	2.83	52,300	0.68	3.38	49,000	0.71	3.82	46,400	0.73	4.23	43,600	0.75	4.68
	80/67	51,600	0.72	2.84	48,300	0.75	3.37	45,500	0.77	3.80	42,700	0.79	4.21	40,100	0.82	4.66
	75/63	48,200	0.75	2.85	45,000	0.77	3.36	42,100	0.80	3.79	39,900	0.81	4.19	37,400	0.84	4.64
	75/57	44,600	1.00	2.85	42,000	1.00	3.36	39,600	1.00	3.78	37,700	1.00	4.19	35,700	1.00	4.64
LRP14GN60	85/72	71,300	0.64	3.59	66,700	0.66	4.31	62,900	0.67	4.90	59,800	0.69	5.42	56,300	0.71	6.03
	80/67	66,100	0.70	3.60	61,800	0.72	4.31	57,000	0.73	4.89	55,300	0.75	5.41	52,000	0.77	6.01
	75/63	61,900	0.72	3.61	57,800	0.74	4.30	54,400	0.76	4.88	51,700	0.77	5.40	48,500	0.79	6.00
	75/57	57,200	0.97	3.61	53,500	1.00	4.30	50,600	1.00	4.87	48,300	1.00	5.38	45,600	1.00	5.98

NOTE: Values based on 0.50 in. w.c. external static pressure.

COOLING RATINGS - 2023

Model No.	Indoor Temp DB/WB ºF	Outdoor Temperature - DB														
		65°F			82°F			95°F			105°F			115°F		
		Btuh Output	S/T	kW Input	Btuh Output	S/T	kW Input	Btuh Output	S/T	kW Input	Btuh Output	S/T	kW Input	Btuh Output	S/T	kW Input
LRP14GN24	85/72	28,200	0.65	1.44	26,100	0.67	1.74	24,600	0.69	1.97	23,200	0.70	2.16	21,700	0.72	2.36
	80/67	26,000	0.70	1.45	24,100	0.72	1.75	22,600	0.75	1.97	21,300	0.76	2.15	20,000	0.79	2.34
	75/63	24,200	0.72	1.47	22,400	0.74	1.75	21,100	0.77	1.96	19,900	0.79	2.14	18,600	0.81	2.32
	75/57	22,300	0.96	1.47	20,700	0.99	1.74	19,700	1.00	1.95	18,700	1.00	2.12	17,600	1.00	2.30
LRP14GN30	85/72	36,600	0.65	1.90	33,400	0.67	2.26	31,200	0.71	2.53	29,300	0.72	2.74	27,300	0.75	2.94
	80/67	33,700	0.71	1.84	30,700	0.73	2.20	28,400	0.77	2.48	27,000	0.79	2.69	25,100	0.82	2.90
	75/63	31,400	0.73	1.79	28,600	0.76	2.15	26,800	0.79	2.43	25,100	0.81	2.64	23,400	0.84	2.86
	75/57	28,900	0.99	1.73	26,700	1.00	2.11	25,200	1.00	2.39	23,900	1.00	2.61	22,500	1.00	2.83
LRP14GN36	85/72	40,900	0.66	2.10	38,400	0.68	2.53	36,300	0.70	2.86	34,300	0.72	3.16	32,100	0.75	3.51
	80/67	37,700	0.72	2.11	35,400	0.74	2.53	33,500	0.77	2.84	31,600	0.79	3.14	29,500	0.81	3.49
	75/63	35,200	0.74	2.12	33,000	0.76	2.52	31,200	0.79	2.83	29,500	0.81	3.14	27,400	0.84	3.48
	75/57	32,500	1.00	2.13	30,800	1.00	2.52	29,400	1.00	2.83	27,900	1.00	3.13	26,300	1.00	3.48
LRP14GN42	85/72	50,100	0.67	2.57	46,400	0.69	3.12	43,900	0.71	3.55	41,300	0.73	3.91	38,300	0.76	4.33
	80/67	46,100	0.73	2.58	42,700	0.75	3.13	40,000	0.77	3.55	38,100	0.80	3.91	35,200	0.83	4.33
	75/63	42,900	0.75	2.59	39,700	0.77	3.13	37,800	0.80	3.55	35,500	0.82	3.91	32,900	0.85	4.35
	75/57	40,000	0.99	2.60	37,500	1.00	3.13	35,700	1.00	3.53	33,900	1.00	3.92	31,800	1.00	4.34
LRP14GN48	85/72	55,700	0.66	2.93	52,000	0.68	3.47	48,700	0.71	3.92	46,100	0.73	4.33	43,300	0.75	4.77
	80/67	51,300	0.72	2.93	47,900	0.74	3.46	44,500	0.77	3.90	42,400	0.79	4.30	39,800	0.82	4.75
	75/63	47,900	0.74	2.94	44,700	0.77	3.45	41,800	0.79	3.88	39,600	0.81	4.28	37,000	0.84	4.73
	75/57	44,300	1.00	2.94	41,700	1.00	3.45	39,300	1.00	3.87	37,400	1.00	4.28	35,400	1.00	4.73
LRP14GN60	85/72	71,100	0.64	3.66	66,500	0.66	4.38	62,700	0.67	4.97	59,500	0.69	5.50	56,000	0.71	6.11
	80/67	65,900	0.70	3.68	61,600	0.72	4.38	57,000	0.73	4.96	55,000	0.75	5.48	51,800	0.77	6.08
	75/63	61,600	0.72	3.68	57,500	0.74	4.38	54,200	0.75	4.95	51,400	0.77	5.47	48,300	0.79	6.07
	75/57	56,900	0.97	3.68	53,300	1.00	4.37	50,300	1.00	4.94	48,100	1.00	5.46	45,400	1.00	6.05

NOTE: Values based on 0.58 in. w.c. external static pressure.

BLOWER DATA

Model No.	Blower Tap		Air Volume (cfm) at Various External Static Pressures - in. w.g.					
			0.1	0.2	0.3	0.4	0.5	0.6
LRP14GN24	Tap 1 (Fan Only)		640	590	545	495	445	385
	Tap 2 Cooling (Low Static)		820	785	750	715	675	635
	Tap 3 Cooling (High Static)		960	925	885	850	815	780
	Tap 4 Heating (Low Static)	CFM	925	890	865	830	795	765
		Rise (°F)	44	46	47	49	51	53
	Tap 5 Heating (High Static)	CFM	1005	970	940	910	880	855
		Rise (°F)	41	42	43	45	46	48
LRP14GN30	Tap 1 (Fan Only)		670	625	580	535	490	440
	Tap 2 Cooling (Low Static)		1020	985	955	920	890	860
	Tap 3 Cooling (High Static)		1140	1105	1075	1045	1015	1000
	Tap 4 Heating (Low Static)	CFM	935	895	860	835	800	765
		Rise (°F)	44	45	47	49	51	53
	Tap 5 Heating (High Static)	CFM	1020	990	955	925	895	865
		Rise (°F)	40	41	43	44	46	47
LRP14GN36	Tap 1 (Fan Only)		795	745	700	645	590	525
	Tap 2 Cooling (Low Static)		1250	1215	1180	1145	1115	1085
	Tap 3 Cooling (High Static)		1390	1355	1320	1285	1250	1205
	Tap 4 Heating (Low Static)	CFM	935	890	855	815	770	725
		Rise (°F)	44	46	48	50	53	56
	Tap 5 Heating (High Static)	CFM	1050	1010	970	935	895	860
		Rise (°F)	39	40	42	44	46	47
LRP14GN42	Tap 1 (Fan Only)		775	700	615	535	470	390
	Tap 2 Cooling (Low Static)		1460	1420	1380	1340	1300	1255
	Tap 3 Cooling (High Static)		1600	1555	1510	1470	1430	1390
	Tap 4 Heating (Low Static)	CFM	1410	1370	1325	1285	1240	1200
		Rise (°F)	39	40	41	42	44	45
	Tap 5 Heating (High Static)	CFM	1535	1495	1555	1415	1375	1335
		Rise (°F)	35	36	37	38	39	41
LRP14GN48	Tap 1 (Fan Only)		1065	1020	965	910	850	790
	Tap 2 Cooling (Low Static)		1665	1630	1595	1560	1530	1490
	Tap 3 Cooling (High Static)		1775	1735	1700	1660	1605	1555
	Tap 4 Heating (Low Static)	CFM	1405	1370	1325	1290	1245	1205
		Rise (°F)	39	40	41	42	44	45
	Tap 5 Heating (High Static)	CFM	1515	1480	1440	1405	1370	1325
		Rise (°F)	36	37	38	39	40	41
LRP14GN60	Tap 1 (Fan Only)		1240	1190	1125	1060	995	940
	Tap 2 Cooling (Low Static)		1885	1840	1800	1755	1715	1675
	Tap 3 Cooling (High Static)		1965	1920	1875	1835	1785	1750
	Tap 4 Heating (Low Static)	CFM	1420	1365	1315	1265	1215	1155
		Rise (°F)	38	40	41	43	45	47
	Tap 5 Heating (High Static)	CFM	1570	1520	1470	1420	1370	1320
		Rise (°F)	35	36	37	38	40	41

NOTE - All air data is measured external to unit with dry coil and without filters.

BLOWER DATA

ACCESSORY AIR RESISTANCE DATA - in. w.g.

Air Volume cfm	Rectangular to Round Duct Adaptor Kits					
	Downflow		Horizontal			
	14 in. Diameter		14 in. Diameter		16 in. Diameter	18 in. Diameter
	24, 30, 36	42, 48, 60	24, 30, 36	42, 48, 60	42, 48, 60	42, 48, 60
500	0.03	- - -	0.04	- - -	- - -	- - -
600	0.05	- - -	0.07	- - -	- - -	- - -
700	0.08	0.13	0.08	0.13	- - -	- - -
800	0.10	0.17	0.12	0.16	- - -	- - -
900	0.12	0.21	0.15	0.21	- - -	- - -
1000	0.17	0.24	0.19	0.25	0.11	0.03
1100	0.18	0.30	0.23	0.30	0.11	0.03
1200	0.20	0.36	0.29	0.37	0.13	0.03
1300	0.26	0.43	0.31	0.43	0.17	0.03
1400	0.31	0.50	0.39	0.51	0.20	0.03
1500	- - -	0.57	- - -	0.57	0.21	0.05
1600	- - -	0.63	- - -	0.65	0.26	0.05
1700	- - -	0.71	- - -	0.72	0.30	0.06
1800	- - -	0.80	- - -	0.81	0.30	0.06
1900	- - -	0.91	- - -	0.90	0.40	0.06
2000	- - -	0.99	- - -	1.01	0.41	0.06

DIMENSIONS UNIT

Size	CORNER WEIGHTS								CENTER OF GRAVITY			
	AA		BB		CC		DD		EE		FF	
	lbs.	kg	lbs.	kg	lbs.	kg	lbs.	kg	in.	mm	in.	mm
24	95	43	98	44	97	44	116	53	23	584	22-3/4	579
30	96	44	101	46	99	45	118	54	23	584	22-3/4	579
36	103	47	103	47	105	48	119	54	23	584	22-3/4	579
42	129	59	129	59	143	65	142	64	27-1/2	699	22-3/4	579
48	133	60	130	59	143	65	143	65	27-1/2	699	22-3/4	579
60	137	62	135	61	147	67	147	67	27-1/2	699	22-3/4	579

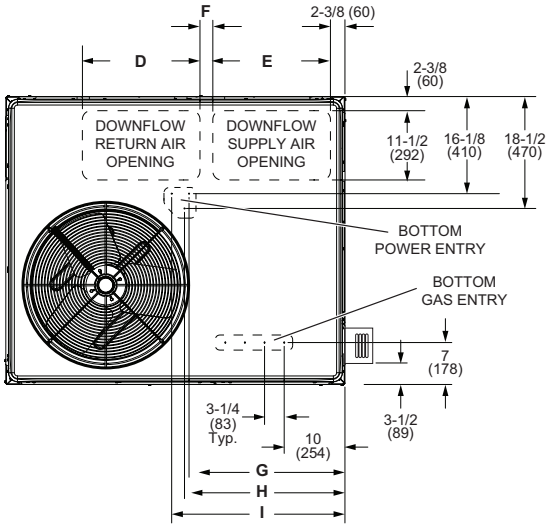

TOP VIEW (Base)

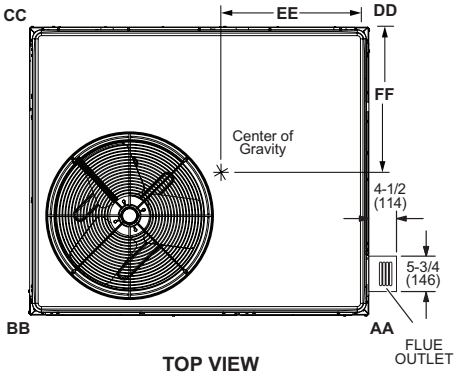

TOP VIEW
(Corner Weight and Center of Gravity)

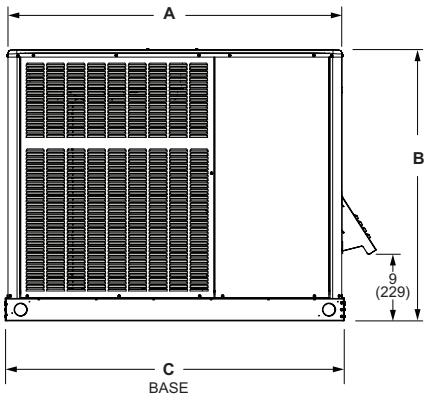

FRONT VIEW

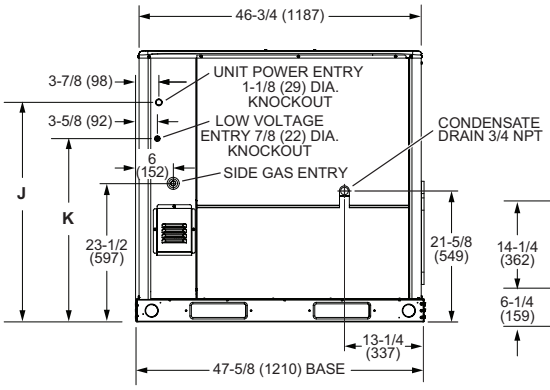

RIGHT SIDE VIEW

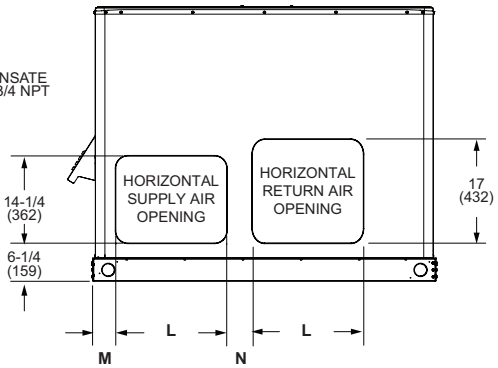

BACK VIEW

Size	A		B		C		D		E		F		G	
	in.	mm	in.	mm	in.	mm	in.	mm	in.	mm	in.	mm	in.	mm
24, 30, 36	47-5/8	1210	40-7/8	1038	47-5/8	1210	16-3/4	425	14	356	2	51	20-1/4	514
42, 48, 60	55-1/4	1403	44-7/8	1140	56-1/8	1426	19-1/2	495	19-1/2	495	2-1/8	54	25-7/8	657

Size	H		I		J		K		L		M		N	
	in.	mm	in.	mm	in.	mm	in.	mm	in.	mm	in.	mm	in.	mm
24, 30, 36	21	533	23-1/4	591	32-1/4	819	26-1/4	667	13-1/2	343	3-1/8	79	5-7/8	149
42, 48, 60	26-1/2	673	26-3/4	679	36-1/4	921	30-1/4	768	18-1/8	460	3-3/4	95	4-3/8	111

CLIP CURB

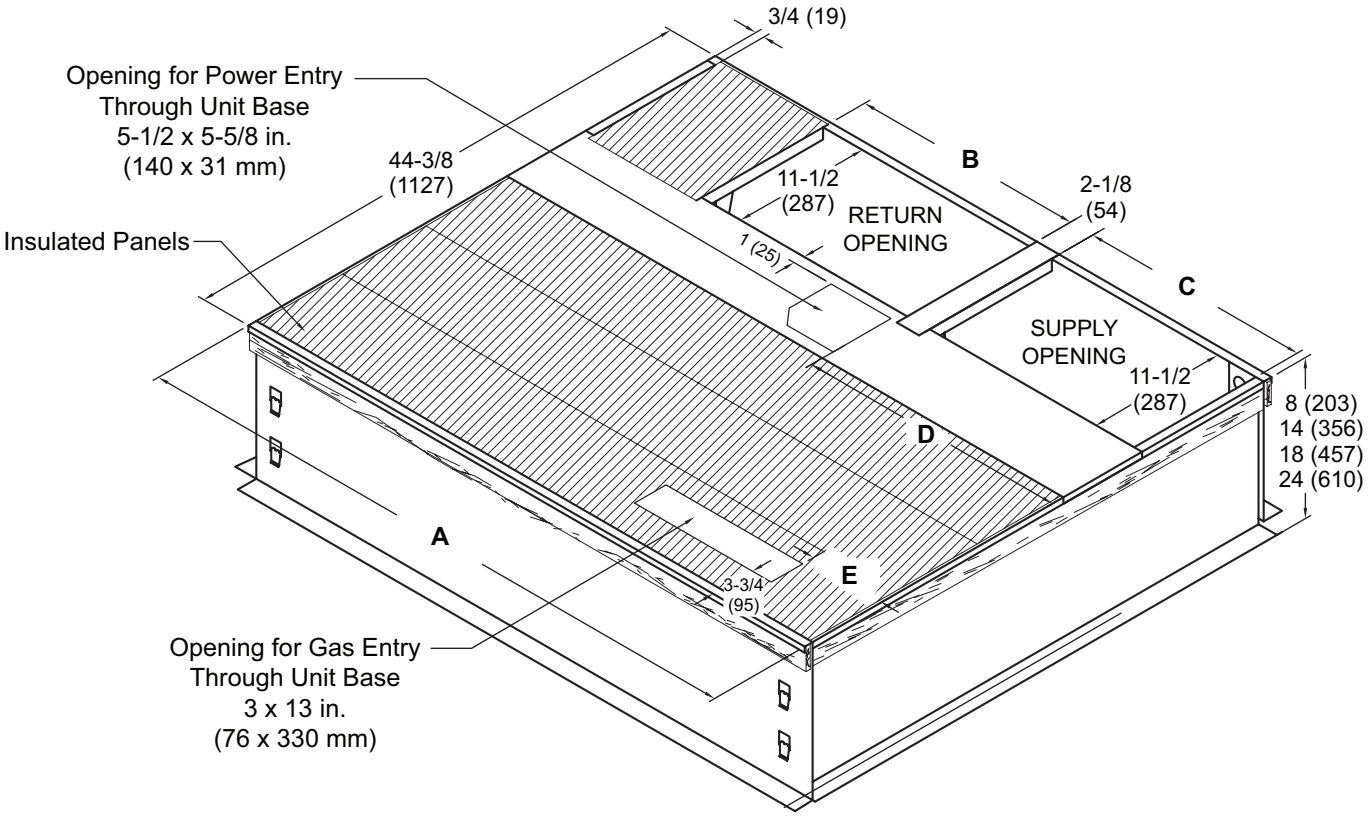

NOTE - Roof deck may be omitted within confines of curb.

TYPICAL FLASHING DETAIL FOR ROOF CURB

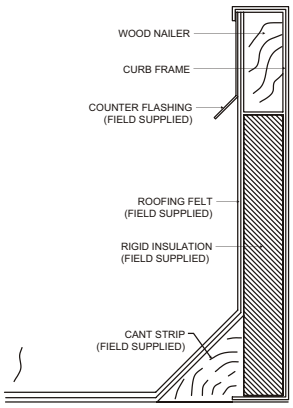

DETAIL ROOF CURB

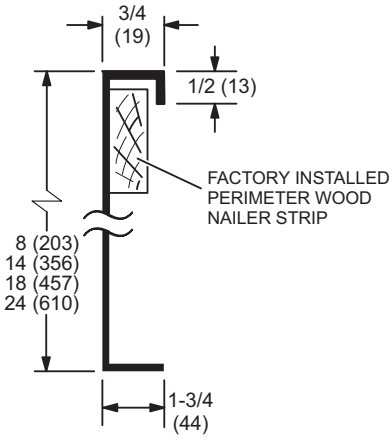

Usage	A		B		C		D		E	
	in.	mm	in.	mm	in.	mm	in.	mm	in.	mm
24, 30, 36	44-3/8	1127	16-7/8	429	13-7/8	352	17-1/4	438	1-1/4	32
42, 48, 60	52-7/8	1343	19-1/2	380	19-1/2	352	23-1/8	587	7	178

ADJUSTABLE PITCH ROOF WELDED CURB

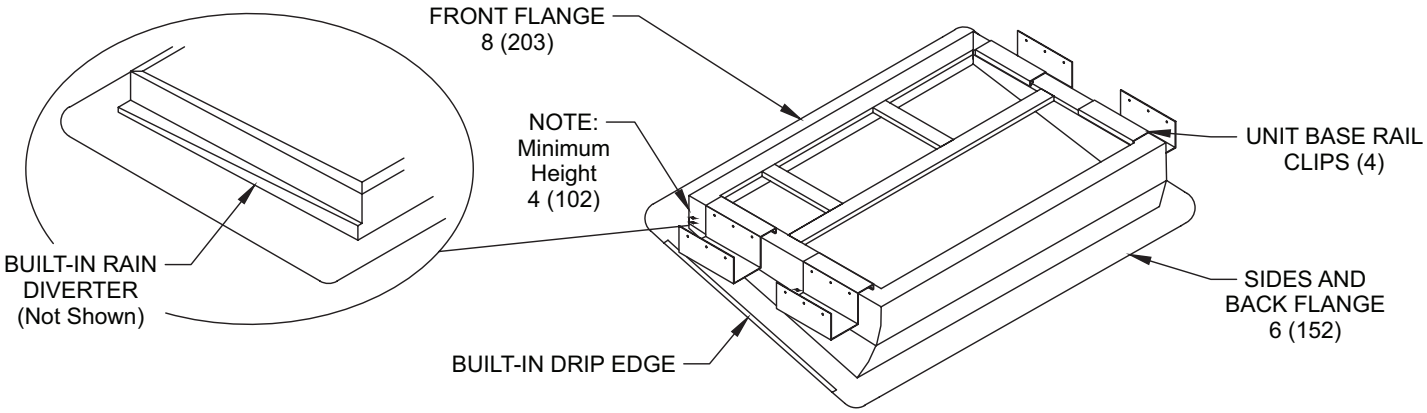

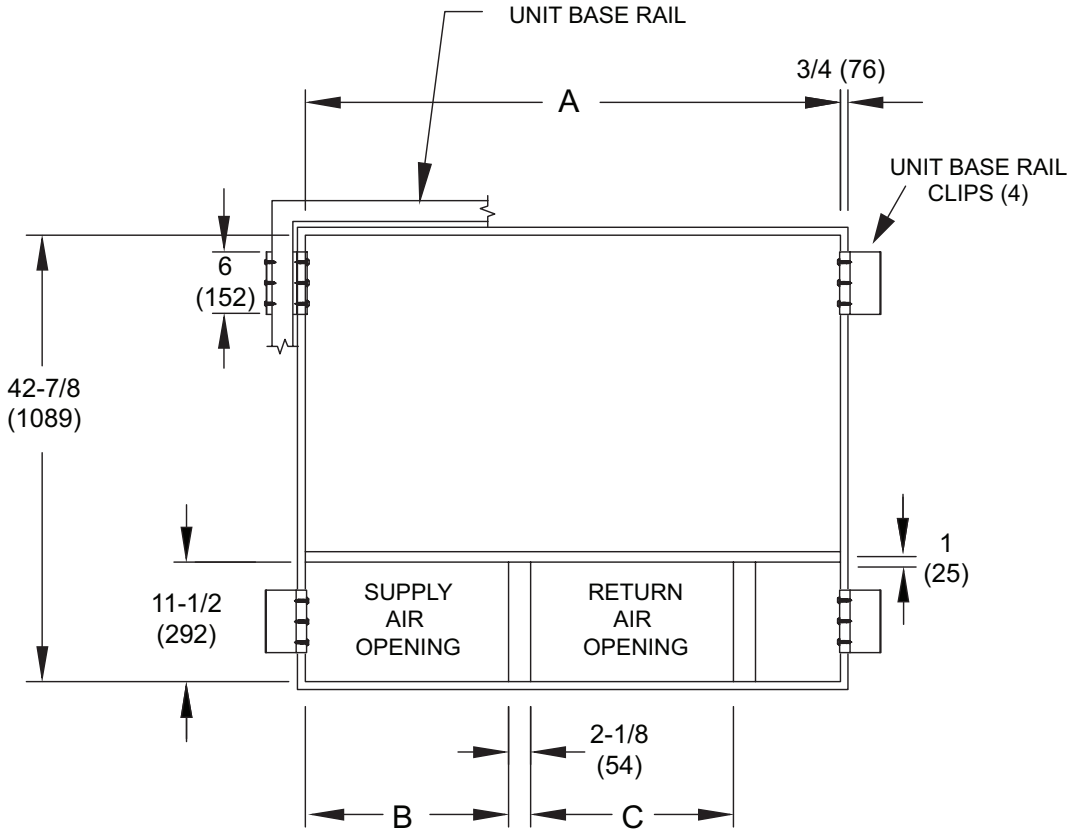

Usage	A		B		C	
	in.	mm	in.	mm	in.	mm
24, 30, 36	42-7/8	1089	13-7/8	352	16-7/8	429
42, 48, 60	51-3/8	1305	19-1/2	495	19-1/2	495

ADJUSTABLE PITCH ROOF CLIP CURB

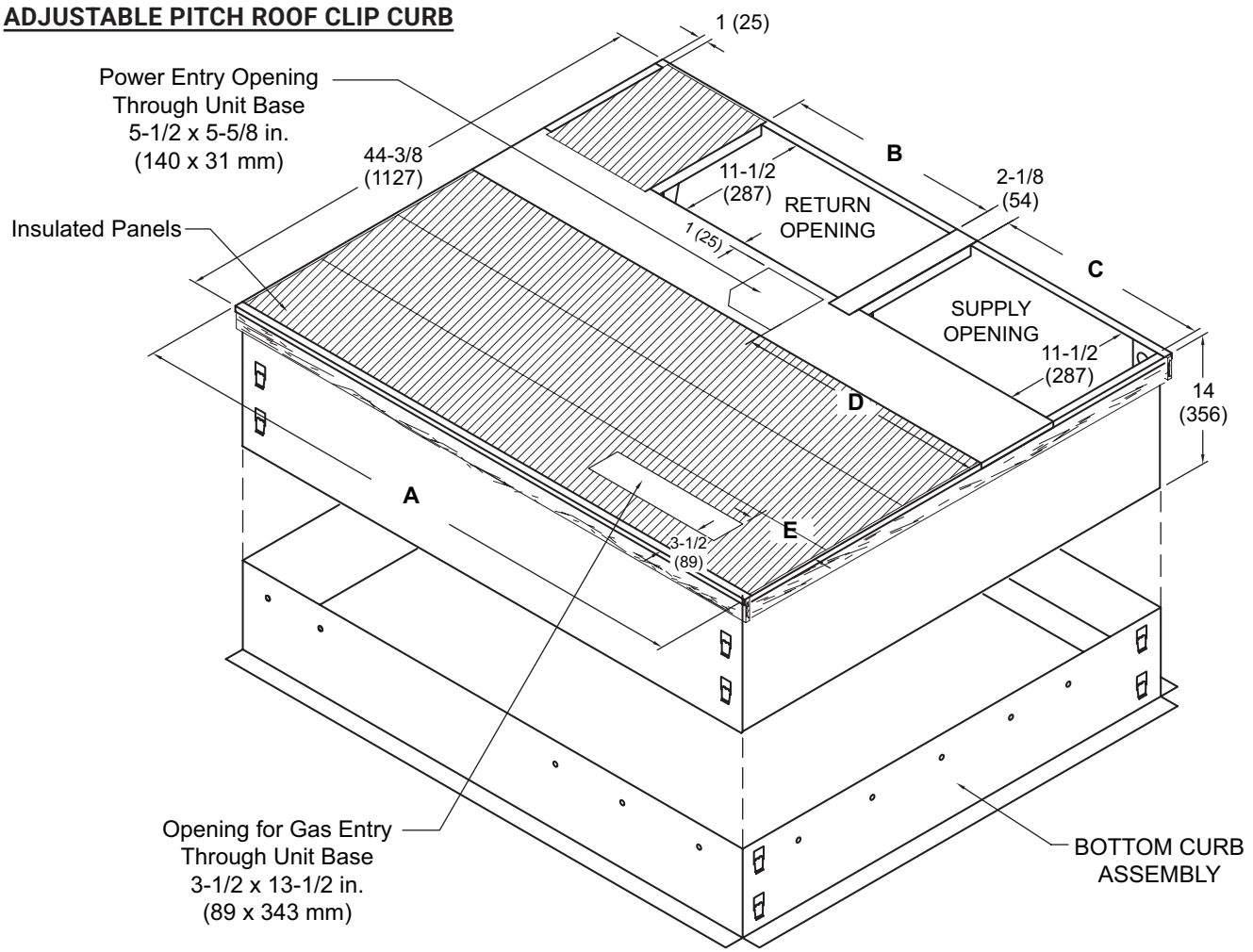

NOTE - Roof deck may be omitted within confines of curb.

TYPICAL FLASHING DETAIL FOR ROOF CURB

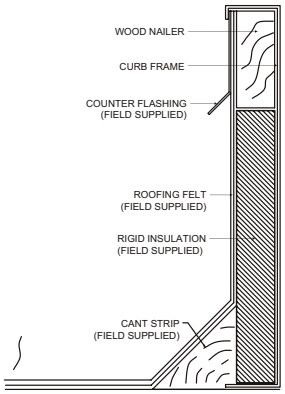

DETAIL ROOF CURB

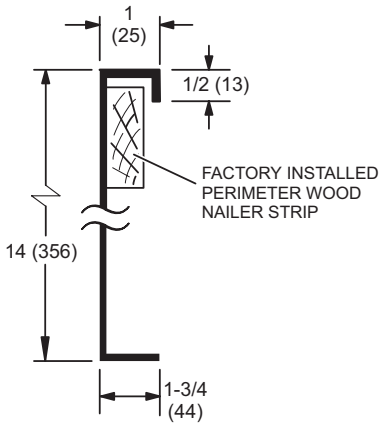

Usage	A		B		C		D		E	
	in.	mm	in.	mm	in.	mm	in.	mm	in.	mm
24, 30, 36	44-3/8	1127	16-7/8	429	13-7/8	352	17-1/4	438	1-1/4	32
42, 48, 60	52-7/8	1343	19-1/2	380	19-1/2	352	23-1/8	587	7	178

REVISIONS

Sections	Description of Change
Approvals and Warranty	Updated Approvals for California only rules (added Bay Area).

Visit us at www.Lennox.com
For the latest technical information, www.LennoxPros.com
Contact us at 1-800-9-LENNOX

NOTE - Due to Lennox' ongoing commitment to quality, Specifications, Ratings and Dimensions subject to change without notice and without incurring liability.
Improper installation, adjustment, alteration, service or maintenance can cause property damage or personal injury.
Installation and service must be performed by a qualified installer and servicing agency.

©2024 Lennox Industries, Inc.