GAS FURNACES

SL280UHNV

DAVE LENNOX *SIGNATURE*® COLLECTION

Upflow / Horizontal - Two-Stage Heat - Variable Speed Blower - 60 Hz

RESIDENTIAL PRODUCT SPECIFICATIONS

Bulletin No. 210793
March 2025
Supersedes all previous versions

S40 Smart Wi-Fi
Communicating Thermostat
(Not Furnished)

AFUE - 80%
Meets NO_x Limit of 14 ng/J
Input - 60,000 to 100,000 Btuh
Nominal Add-on Cooling - 2 to 5 Tons

MODEL NUMBER IDENTIFICATION

SL 2 80 UH 060 N V 36 A

Unit Type
SL = Dave Lennox *Signature*® Collection

Stages
2 = Two-Stage

AFUE
80 = 80%

Configuration
UH = Upflow/Horizontal

Nominal Gas Heat Input
060 = 60,000 Btuh
080 = 80,000 Btuh
100 = 100,000 Btuh

Ultra-Low NOx
N = Units meet California Nitrogen Oxides Standard (14ng/J)

Blower
V = Variable Speed Blower Motor

Nominal Add-On Cooling Capacity
36 = 2-3 tons
48 = 3-4 tons
60 = 3.5-5 tons

1 Cabinet Width
A = 14-1/2 in.
B = 17-1/2 in.
C = 21 in.

[1] Indoor coils with the same letter designation physically matches the furnace.

FEATURE HIGHLIGHTS

1. Heat Exchanger Assembly
2. Burner Orifice/Air Intake Assembly
3. SureLight® Hot Surface Ignitor
4. Modulating Gas Control Valve
5. Variable-Speed Combustion Air Inducer
6. Thermal Switch
7. Variable Speed Direct Drive Blower
8. SureLight® Integrated Furnace Control
9. Insulated Cabinet
10. Safety Interlock Switch
11. Gas Piping And Electrical Inlets

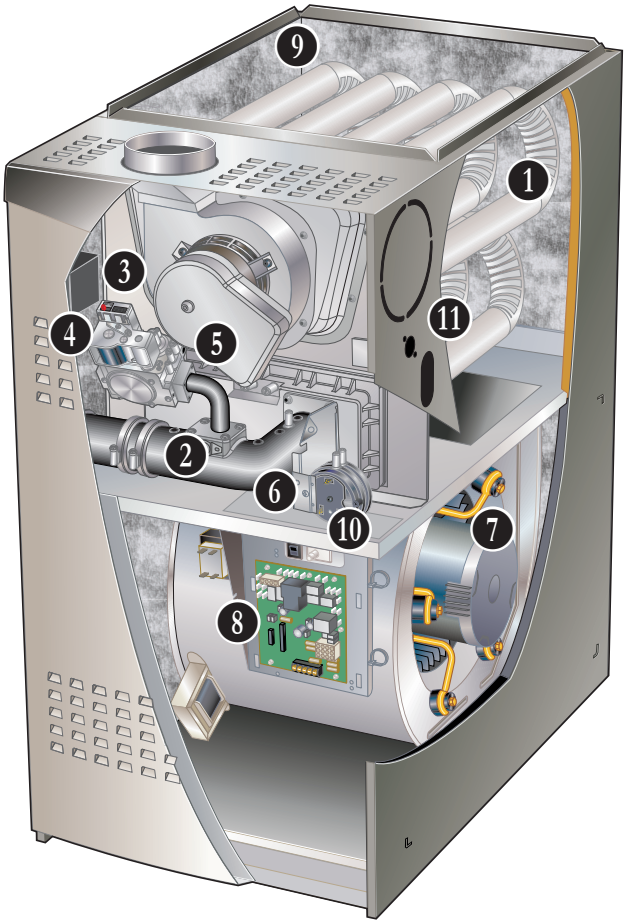

NOTE - SL280UHNV FURNACES ARE NATURAL GAS ONLY!
NOTE - SL280UHNV FURNACES ARE NOT AVAILABLE IN CANADA!
NOTE - SL280UHNV FURNACES CANNOT BE TWINNED!
NOTE - NOT AVAILABLE IN ALL AREAS!
CONTACT YOUR NEAREST LENNOX SALES OFFICE FOR DETAILS.

CONTENTS

Blower Data 16
Approvals And Warranty 3
Dimensions 12
- Furnace/Coil Combined Dimensions 15
- Optional Accessories 14
- Unit - Horizontal Position 13
- Unit - Upflow Position 12
Features 3
High Altitude Operation. 11
Installation Clearances 9
Optional Accessories - Order Separately 11
Specifications 10

APPROVALS AND WARRANTY

APPROVALS

- AHRI Certified
- Tested and rated according to US DOE test procedures and FTC labeling regulations
- Approved by the California Energy Commission and meets California Nitrogen Oxides Standard (NOx) limits of 14 ng/J
- Furnaces are approved for installations from 0-7500 ft. with no modification
- ISO 9001 Registered Manufacturing Quality System
- Blower data from unit tests conducted in Lennox Laboratory air test chamber

NOTE - This furnace has not been CSA International design certified for installation in mobile homes, recreational vehicles, or outdoors.

California Only

- These furnaces **meet** the South Coast Air Quality Management District (SCAQMD) Rule 1111 and San Joaquin Valley Air Pollution Control District (SJVAPCD) Rule 4905 NOx emission limit (14 ng/J) and can be installed within the SCAQMD, SJVAPCD and Bay area

WARRANTY

- Heat Exchanger:
  - Limited twenty years in residential applications
  - Limited ten years in non-residential applications
- All other covered components:
  - Limited ten years in residential installations
  - Limited one year in non-residential installations

NOTE - Refer to Lennox Equipment Limited Warranty certificate included with unit for specific details.

FEATURES

APPLICATIONS

- Input capacities of 60,000, 80,000 and 100,000 Btuh
- Energy efficiency (AFUE) - 80%
- Compact cabinet for upflow, horizontal-left or horizontal-right applications
- Utility room, alcove, closet, crawl space, basement or attic installation
- Lennox add-on indoor coils, high-efficiency air cleaners and humidifiers can easily be added to furnace
- Shipped factory assembled with all controls installed and wired
- Ready for installation in upflow or horizontal right-hand position without any modifications
- Horizontal left-hand requires repositioning of pressure switch
- Removable bottom seal panel shipped in place for side return air is easily removed for bottom/end return air applications
- Each unit factory test operated to ensure proper operation

ZONING APPLICATIONS

- The SL280V furnace is designed to work with the Lennox® Smart Zoning System with the Lennox® Communicating Thermostat
- The Lennox® Smart Zoning System provides direct feedback to the furnace, controlling both airflow and heat output to precisely match the comfort requirements for up to four zones

HEATING SYSTEM

1 Heat Exchanger Assembly
- Heavy gauge aluminized steel heat exchanger
- Tubular design
- Designed for normal expansion and contraction
- Round surfaces create minimum resistance to air flow for excellent heat transfer
- Laboratory life cycle tested in excess of industry standards
- Compact size permits low overall design of furnace cabinet

2 Burner Orifice/Air Intake Assembly
- Burner assembly has a single orifice located between the gas valve and the air intake assembly
- Orifice is precisely matched to the burner input
- Burner can be removed for servicing

3 SureLight® Hot Surface Ignitor
- Tough, reliable, long-life, trouble-free performance
- Silicon nitride ignitor
- 120 volt
- Cemented to steatite block for protection against current leakage
- Ignition leads are constructed of nickel plated copper and are enclosed in high temperature Teflon® insulation for dependable operation

HEATING SYSTEM (continued)

4 Modulating Gas Control Valve
- 24 volt redundant combination modulating gas control valve combines manual shut off switch (On-Off), automatic electric valve (dual) and gas pressure regulation into a compact combination control

Air Intake Pipe Assembly (REQUIRED)
- Furnished for field installation outside the conditioned air stream
- Adds 4-1/2 in. (114 mm) to furnace width
- Consists of: (1) 2 in. PVC elbow, (1) PVC 3 x 2 in. reducer, (1) 2 in. PVC pipe and Inlet screen
- Assembly must be mounted on the left side of cabinet in upflow applications, see dimension drawings
- Assembly must be mounted above the cabinet in horizontal right-hand air discharge applications and below the cabinet in left-hand air discharge applications, see dimension drawings
- See installation instructions for additional information
- Assembly may be rotated if necessary to accommodate furnace installation

5 Variable-Speed Combustion Air Inducer
- Heavy duty variable-speed blower prepurges heat exchanger and safely vents flue products
- Pressure switch (low fire/high fire) proves blower operation before allowing gas valve to open
- Operates only during heating cycle

6 Thermal Switch
- Factory installed on air/fuel intake assembly
- Automatic reset
- Switch provides protection from abnormal operating conditions

Limit Controls
- Primary limit is accurately located on vestibule panel on all units
- Automatic reset

Optional Accessories

Low Profile Air Intake Pipe Kit
- Replaces the required Air Intake Pipe Assembly furnished for reduced clearances in confined spaces
- Adds 2-3/4 in. (70 mm) to furnace width
- Consists of: (1) 2 in. PVC street elbow, (1) 2 in. PVC sweep elbow, (1) 2 in. PVC pipe and Inlet screen
- Intake air orifices are furnished for each size furnace
- Assembly must be mounted on the left side of cabinet in upflow applications
- Assembly must be mounted above the cabinet in horizontal right-hand air discharge applications and below the cabinet in left-hand air discharge applications
- Street and sweep elbows may be swiveled independently to different positions if necessary to accommodate furnace installation
- See kit installation instructions for additional information

Vent Adaptor (Upflow Applications Only)

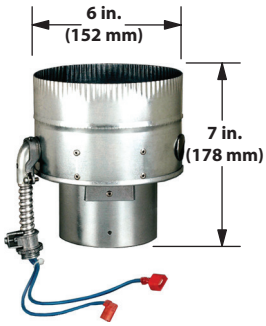

- Allows venting through a masonry chimney without the need of a flue liner
- Manual reset temperature sensor protects against abnormal operating conditions
- Sensor wiring may be routed from either side of adaptor
- Minimum winter design temperatures:
  - −10°F when used with interior masonry chimneys
  - +5°F when used with exterior masonry chimneys

NOTE - Refer to Winter Design Temperatures Map on 9 for application information. Also refer to the installation instructions for detailed information.

Combustion Air Intake Muffler Kit
- Significantly reduces outdoor operating sound levels
- Installed vertically or horizontally in the intake piping
- See Optional Accessories Dimension Drawing

BLOWER

7 Variable Speed Direct Drive Blower
- Each blower assembly statically and dynamically balanced
- Blower assembly easily removed for servicing

Variable Speed Blower Motor
- Variable speed motor maintains specified air volume from 0 though 0.8 in. w.g. (heating) and 0 through 1.0 in. w.g. (Cooling) static range
- Variable speed operation is achieved by the use of an ECM (Electronically Commutated Motor) motor
- Motor is controlled by furnace control
- Change in blower speed is easily accomplished by simple DIP switch change on furnace control
- See Blower Data tables
- Motor is resiliently mounted

NOTE - When furnaces are used with the Lennox® Smart Zoning System and the Lennox® Communicating Thermostat, the blower motor operates from predetermined minimum - maximum air volumes to satisfy zone requirements.

CONTROLS

8 SureLight® Integrated Furnace Control (Lennox® Communicating)

- Advanced control communicates information about various operating parameters in the furnace to the optional Lennox® Communicating Thermostat to constantly maintain the highest level of comfort and performance available
- Auto Configuration - On start-up the control automatically sends a description of the unit to the optional Lennox® Communicating Thermostat to automatically configure the number of stages and features available
- Terminals for connecting a conventional heating/cooling thermostat are also provided on the control
- Control also features Innovative AirFlex™ technology which allows custom blower settings based on the application

NOTE - For optimal performance, the use of a high-quality, digital two-stage thermostat with adjustable settings for first stage/second stage, on/off differentials and adjustable stage timers is recommended.

Furnace Input Staging Options

Thermostat Type	Input Staging Available
Lennox® Communicating Thermostat	Two-Stage (65 and 100%)
Two-Stage (Conventional)	
Single-Stage (Conventional)	

- Safety Controls - Flame sensor utilizes flame rectification for safe and reliable operation
- Should flame fail to ignite, control will initiate 4 re-attempts at ignition before locking out unit operation for 60 minutes
- Watchguard type circuit automatically resets ignition control after one hour of continuous thermostat demand after unit lockout, eliminating nuisance calls for service
- Display LED - Seven segment LED displays alpha-numeric information related to diagnostics as well as system operation and status
- Diagnostic codes are held in non-volatile memory, immune from power interruptions
- Holds up to ten diagnostic codes in order of occurrence for recall on demand
- Port on blower door allows for easy viewing

DIP Switch Settings

- Select Thermostat Used - Single-Stage or Two-Stage
- Two selectable second stage recognition times (7 and 12 minutes) are available on the control when the furnace is used with a single-stage thermostat
- When used with a two-stage thermostat, furnace will only initiate second stage operation with a second stage thermostat demand
- Heating Speeds - A combination of DIP switch settings allow the following motor speed selection settings within the heating speed selected for fine tuning air volume:
  - Factory default
  - 6%, 12%, 18% or 24% increase
  - 6%, 12% or 18% decrease
- See Blower Performance tables
- Cooling Speeds - A combination of DIP switch settings allow the following motor speed selection settings within the cooling speed selected for fine tuning air volume:
  - Factory default
  - 10% increase
  - 10% decrease
- See Blower Performance tables
- Blower Speed Ramping (Cooling Mode) - DIP switch settings allow one of four blower speed profiles during cooling operation.
  - Profile A (factory setting) - Motor runs at 50% for 30 seconds, then at 82% for 7-1/2 minutes, then at 100% (if needed) until demand is satisfied.
    Once demand is met, motor runs at 50% for 30 seconds, then ramps down to stop
  - Profile B - Motor runs at 82% for 7-1/2 minutes and then at 100% (if needed) until demand is satisfied. Once demand is met, motor ramps down to stop
  - Profile C - Motor runs at 100% until demand is satisfied. Once demand is met, motor runs at 100% for 60 seconds, then ramps down to stop
  - Profile D - Motor runs at 100% until demand is satisfied. Once demand is met, motor ramps down to stop
- Dehumidification (Active or Humiditrol® Option) - A jumper on the control must be clipped to enable active dehumidification and/or operation with a Humiditrol® Whole-Home Dehumidification System
- A humidity controlling thermostat or device is also required
- During a call for cooling, air volume is automatically reduced, forcing humidity removal by the air conditioner or heat pump system (single stage units or two-stage units running at 2nd stage)
- After the humidity has reached the desired set-point the cooling air volume returns to its designed rate
- A dehumidification signal from the thermostat reduces the cooling cfm to 70% of the requested cooling cfm
- Dual-Fuel Operation - A jumper on the control must be clipped to enable operation with a single or two-stage heat pump
- The indoor blower is started without delay when a call for heat is received
- Two-Stage Compressor Operation - A jumper on the control must be clipped to enable operation with a two-stage compressor
- The cooling blower speeds for first and second stage cooling will be dictated by the applicable DIP switch settings

CONTROLS (continued)

- Lennox System Operations Monitor Connection - Monitors outdoor unit operation (communicating mode)
- Blower On/Off Time (Heating) - Blower on time is fixed at 30 seconds, blower off time is adjustable from 60, 90, 120 and 180 seconds (factory setting - 90 seconds)
- Blower On/Off Time (Cooling) - For air-conditioning applications, blower on time is 2 seconds following thermostat demand for cooling
- See "Blower Speed Ramping (Cooling Mode)" profiles for various blower off details
- Controls evaporator humidity by controlling blower and compressor speed on two-stage outdoor units when used with the Lennox® Communicating Thermostat
- Continuous Blower Speed - Adjustable continuous blower speed is a percentage of the high cooling speed selection
- Four selectable options (via DIP switch settings) of 28%, 38% (default setting), 70% and 100%
- Accessory Terminal - One accessory terminal furnished for additional power supply requirements for 120 volt (less than 1 amp) powered IAQ accessories
- One un-powered pair of contacts are provided for humidifier connections and may be connected to 24V or 120V
- Control is factory installed in the unit control box

24 Volt Transformer (40VA)

- Furnished and factory installed on outside of control box
- Circuit breaker (furnished) is wired in series

Field Wiring Make-up Box

- Furnished for line voltage wiring
- Factory installed internally on right side of furnace

NOTE - Box cannot be moved on "A" width models.

Box can be installed externally on right side of the furnace on "B and "C" width models.

Box can be installed internally or externally on left side of the furnace on "B and "C" width models.

Optional Accessories

S40 Smart Wi-Fi Thermostat (part of the Lennox® Residential Communicating Control System)

- Recognizes and connects to all Lennox® Communicating products to automatically configure and control the heating/cooling system (based on user-specified settings) for the highest level of comfort, performance and efficiency

- Recognizes model and serial number information for Lennox® Communicating products to simplify system setup
- Lennox Smart Room Sensors, Lennox Wireless Extenders and Lennox Smart Air Quality Monitor can be added to the system
- Smart home automation compatible with Amazon Alexa®, Google Assistant, Control4® and Building36®
- Sends service alerts and reminders
- Lennox Smart Thermostat App features Wi-Fi remote temperature monitoring and adjustment through a home wireless network apps for smartphones or tablets
- Lennox Smart Technician App allows installer to manage systems in the home
- Service Dashboard features online real-time monitoring and advanced diagnostics of installed Lennox® Communicating systems
- Simple easy-to-use touchscreen allows complete system configuration
- Scheduled maintenance alerts, system warnings and troubleshooting are also displayed on thermostat screen
- Easy to read 7 inch high definition color display (measured diagonally)
- Conventional outdoor units (not Lennox® Communicating) can easily be added and controlled by the S40 Thermostat
- Installer setup screens allow quick and simple system configuration without a manual, Installer can also run tests on complete system or individual components for easy maintenance and troubleshooting
- Serial communications bus (RSBus), with less wiring than a conventional heating/cooling system, allows system communication
- Uses standard 4-wire unshielded thermostat wiring
- High Definition Color Display with Subbase and wallplate furnished for easy installation

NOTE - See the Lennox® S40 Thermostat Product Specifications bulletin for more information.

CONTROLS (continued)

Remote Outdoor Temperature Sensor

- Allows thermostat to display outdoor temperature
- Automatically detected when connected to thermostat

NOTE - Sensor is required for the Enhanced Dehumidification Accessory (EDA).

NOTE - Sensor is furnished as standard with Lennox® Communicating outdoor units, optional for conventional units.

Thermostat

- Thermostat is not furnished with unit
- Lennox Price Book for selection

Transformer (75VA)

- Recommended when furnace is used with zoning or defrost thermostats and other 24V accessories requiring a higher VA rating
- Circuit breaker (furnished) is wired in series
- Replaces the standard 40VA transformer

CABINET

NOTE - Flue outlet is on top of the cabinet only!
In the upflow position the flue must be vented vertically.
In the horizontal position the flue must be vented vertically immediately after exiting the cabinet!

- Low-profile, narrow width cabinet allows easy installation
- Heavy-gauge, cold rolled steel construction
- Pre-painted cabinet finish
- Flanges provided on supply air opening for ease of plenum connection or alignment with indoor coil
- 9 Insulated cabinet with foil faced insulation on sides and back of heating compartment and mat faced insulation in blower compartment
- Sealed blower compartment
- Inner blower compartment access panel seals blower compartment from air leakage
- Cabinet door can be removed without any tools
- Complete service access
- 10 Safety interlock switch automatically shuts off power to unit when inner blower compartment access panel is removed
- 11 Gas piping and electrical inlets are provided in both sides of cabinet on “B” and “C” width models.

NOTE - Gas piping is only available on the left side of the cabinet on “A” width models.

Bottom/Side Return Air Entry:

- Upflow/horizontal with bottom return air entry:
  - Remove furnished bottom seal panel from cabinet
- Upflow only with side return-air entry:
  - Corners are marked on either side of cabinet for return air cut-out
- See dimension drawings

NOTE - 60C size units that require air volumes over 1800 cfm must have one of the following:

- Single side return air and Optional Return Air Base with transition that must accommodate required 20 x 25 x 1 inch air filter to maintain proper velocity
- Bottom return air
- Return air from both sides
- Bottom and one side return air
- See Blower Performance Tables for additional information

Coil Match-Up

- All furnaces exactly match Lennox cased upflow indoor coils and horizontal indoor coils with same letter designation (A, B, C, D) in model number
- No adaptor required
- Engaging holes furnished on cabinet for alignment
- Lennox uncased coils match furnaces without any overhang but require an optional adaptor base or field fabricated transition to match furnace opening
- See coil bulletin for additional information

Low Leakage Cabinet

- All models have less than 2% air leakage
- Meets ANSI/ASHRAE Standard 193-2010 “Method of Test for Determining the Air Tightness of HVAC Equipment”

Optional Accessories

Horizontal Suspension Kit

- Provides suspension of unit and indoor coil in horizontal applications
- Allows complete service access
- Consists of corner mounted hanging brackets with vibration isolators, return air end support rail and hardware for assembly
- Metal hanging straps must be field provided

Return Air Base

NOTE - On furnaces with side return air and condensate trap on the same side of the cabinet, a field fabricated transition or Return Air Base is required when using an IAQ product higher than 14-3/16 inches installed next to the unit and serviced from the front. IAQ products higher than 20 inches require a field fabricated transition.

NOTE - Must be used for 60C size models with air volumes over 1800 cfm in upflow applications when only one side return is required.

- Cabinet is shipped flat for easy field assembly
- Pre-painted steel to match the furnace
- See Dimension Drawing

FEATURES

FILTER (not furnished)

- Filter and provisions for external mounting must be field provided

Optional Accessories

Air Filter and Rack Kit for Horizontal Return Air (End) Applications

- Washable or vacuum cleanable polyurethane frame type filter and external end return air rack
- Rack has filter door for servicing
- Flanges on rack for duct connection
- Field installed
- See dimension drawing

Air Filter and Rack Kit for Upflow Side Return Air
NOTE - Not for use with Return Air Base

- Washable or vacuum cleanable polyurethane frame type filter and external side return air rack available for field installation
- Available in single and ten pack kits
- Rack has filter door for servicing
- Flanges on rack for duct connection
- Field installs on either side of unit cabinet
- See dimension drawing

REFRIGERATION DETECTION SYSTEM (RDS)

Optional Accessories

Refrigerant Detection System (RDS) Coil Sensor Kit

- Complies with UL 60335-2-40 approved standard
- Required for field installation for all systems using R-454B refrigerant if sensor is not furnished with coil
- Consists of Refrigerant Detection System (RDS) sensor, lineset sleeves, mounting brackets and A2L labeling
- Sensor ensures safe operation for systems equipped with R-454B refrigerant
- Sensor will detect any refrigerant leaks if they occur

Refrigerant Detection System (RDS) Blower Control Board

Communicating Blower Control Board (Universal)

- Communicating Blower Control Board and Sensor can be used universally with any Lennox® communicating furnace or any non-communicating 24 volt furnace

Non-Communicating Blower Control Board

- Non-Communicating Blower Control Board and Sensor can be used with any non-communicating 24 volt furnace

Standard Features

- Complies with UL 60335-2-40 approved standard
- Required for all systems using R-454B refrigerant
- Connects to the RDS sensor furnished with the RDS Coil Sensor Kit
- Supports up to two RDS Sensors (factory setting)
- Used as an interface between indoor unit and thermostat to control system in case of a refrigerant leak
- Ensures safe operation for systems equipped with R-454B refrigerant
- If a leak is detected, the refrigerant detection system will stop compressor and/or heating operation and operate the blower to reduce concentrations in the conditioned space
- Once safe levels are reached the HVAC system will resume normal operation
- Multi-color LED for system status and as an aid in troubleshooting
  - Flashing LED codes for system status (Green/Blue) and diagnosing Sensor errors (Red)
- Alarm relay can trigger an external alarm if a leak is detected
- Zone relay opens all zone dampers (if part of a zoning system) if a leak is detected
- Power is disabled to non-communicating thermostats to prevent demand if a leak is detected
- On system start-up blower will run for five minutes and any thermostat demands are disabled
- Dimensions (H x W x D): 7-7/16 x 7-7/16 x 2-1/2 (189 x 189 x 127 mm)

NOTE - See Refrigerant Detection System (RDS) Components Table on page 11.

See the CK40 Indoor Coil Product Specifications bulletins for more information.

Refer to the Installation Instructions for additional information.

99% WINTER DESIGN TEMPERATURES FOR THE CONTIGUOUS UNITED STATES

This map is a necessarily generalized guide to temperatures in the contiguous Unites States. Temperatures shown for areas such as mountainous regions and large urban centers may not be accurate. The data used to develop this map was taken from the 1993 ASHRAE Fundamentals Handbook (Chapter 24, Table 1: Climate Conditions for the United States).

Reprinted with permission from NFPA 54: National Fuel Gas Code 1999, National Fire Protection Association, Quincy, MA 02269. This reprinted material is not the complete and official position of the National Fire Protection Association on the referenced subject, which is represented only by the standard in its entirety.

INSTALLATION CLEARANCES

UPFLOW POSITION

Vent Type	Type B1	Type C
Sides	1 (25)	[1] 1 (25)
Left Side with furnished Air Intake Pipe Assembly	4-1/2 (114)	4-1/2 (114)
Left Side with Optional Low Profile Air Intake Pipe Kit	2-3/4 (70)	2-3/4 (70)
Rear	1 (25)	1 (25)
Top	1 (25)	1 (25)
Front	[1] 2-1/4 (57)	[2] 2-1/4 (57)
Front (service/alcove)	24 (610)	24 (610)
Floor	Combustible	Combustible
Flue	1 (25)	6 (152)

NOTE − Air for combustion must conform to the methods outlined in the National Fuel Gas Code (NFPA 54/ANSI-Z223.1).

NOTE − In the U.S. flue sizing must conform to the methods outlined in the current National Fuel Gas Code (NFPA 54/ANSI-Z223.1) or applicable provisions of local building codes.

[1] Left side requires 3 in. if single wall vent is used on 14-1/2 in. cabinets, 2 in. on 17-1/2 in. cabinets.

[2] 4-1/2 in. if single wall vent pipe is used.

HORIZONTAL POSITION

Vent Type	Type B1	Type C
End	[1] 2	[1] 2
Rear	1 (25)	1 (25)
Top	[1] 1 (25)	[1] 1 (25)
Top or Bottom with furnished Air Intake Pipe Assembly	4-1/2 (114)	4-1/2 (114)
Top or Bottom with Optional Low Profile Air Intake Pipe Kit	2-3/4 (70)	2-3/4 (70)
Front	2-1/4 (57)	2-1/4 (57)
Front (service)	24 (610)	24 (610)
Floor	Combustible	Combustible
Flue	1 (25)	6 (152)

NOTE − Air for combustion must conform to the methods outlined in the National Fuel Gas Code (NFPA 54/ANSI-Z223.1).

NOTE − In the U.S. flue sizing must conform to the methods outlined in the current National Fuel Gas Code (NFPA 54/ANSI-Z223.1) or applicable provisions of local building codes.

[1] Line contact installation permissible between jacket top or sides and building joists.

SPECIFICATIONS

		Model No.	SL280UH060NV36A	SL280UH080NV48B
Gas Heating Performance		[1] AFUE	80%	80%
	High Fire	Input - Btuh	60,000	80,000
		Output - Btuh	47,000	63,000
		Temperature rise range - °F	30 - 60	30 - 60
		Gas Manifold Pressure (in. w.g.) Natural Gas Only	0.05	0.05
	Low Fire	Input - Btuh	39,000	52,000
		Output - Btuh	32,000	43,000
		Temperature rise range - °F	20 - 50	20 - 50
		Gas Manifold Pressure (in. w.g.) Natural Gas Only	0.05	0.05
High static - in. w.g.		Heating	0.8	0.8
		Cooling	1.0	1.0
Connections in.		Flue connection − in. round	4	4
		[2] Air Intake - in. round	2	2
		Gas pipe size IPS	1/2	1/2
Indoor Blower		Wheel nominal diameter x width - in.	10 X 8	11-1/2 X 9
		Motor output - hp	1/2	1.0
		Tons of add-on cooling	2 - 3	2.5 - 4
		Air Volume Range - cfm	565 - 1295	504 - 1710
Electrical Data		Voltage	120 volts - 60 hertz - 1 phase	
		Blower motor full load amps	7.7	12.8
		Maximum overcurrent protection	15	20
Shipping Data		lbs. - 1 package	121	142

NOTE - Filters and provisions for mounting are not furnished and must be field provided.

[1] Annual Fuel Utilization Efficiency based on DOE test procedures and according to FTC labeling regulations. Isolated combustion system rating for non-weatherized furnaces.

[2] Requires furnished Air Intake Pipe Assembly.

SPECIFICATIONS

		Model No.	SL280UH080NV60C	SL280UH100NV60C
Gas Heating Performance		[1] AFUE	80%	80%
	High Fire	Input - Btuh	80,000	100,000
		Output - Btuh	62,000	79,000
		Temperature rise range - °F	30 - 60	30 - 60
		Gas Manifold Pressure (in. w.g.) Natural Gas Only	0.05	0.05
	Low Fire	Input - Btuh	52,000	65,000
		Output - Btuh	43,000	53,000
		Temperature rise range - °F	20 - 50	25 - 50
		Gas Manifold Pressure (in. w.g.) Natural Gas Only	0.05	0.05
High static - in. w.g.		Heating	0.8	0.8
		Cooling	1.0	1.0
Connections in.		Flue connection − in. round	4	4
		[2] Air Intake - in. round	2	2
		Gas pipe size IPS	1/2	1/2
Indoor Blower		Wheel nominal diameter x width - in.	11-1/2 X 10	11-1/2 X 10
		Motor output - hp	1.0	1.0
		Tons of add-on cooling	3 - 5	3 - 5
		Air Volume Range - cfm	540 - 2205	900 - 2125
Electrical Data		Voltage	120 volts - 60 hertz - 1 phase	
		Blower motor full load amps	12.8	12.8
		Maximum overcurrent protection	20	20
Shipping Data		lbs. - 1 package	151	158

NOTE - Filters and provisions for mounting are not furnished and must be field provided.

[1] Annual Fuel Utilization Efficiency based on DOE test procedures and according to FTC labeling regulations. Isolated combustion system rating for non-weatherized furnaces.

[2] Requires furnished Air Intake Pipe Assembly.

OPTIONAL ACCESSORIES - ORDER SEPARATELY

NOTE - FURNACES CANNOT BE TWINNED!

			"A" Width Models	"B" Width Models	"C" Width Models
CABINET ACCESSORIES					
Horizontal Suspension Kit - Horizontal only			**51W10**	**51W10**	**51W10**
Return Air Base - Upflow only			**65W75**	**50W98**	**50W99**
CONTROLS					
S40 Smart Wi-Fi Thermostat			**22V24**	**22V24**	**22V24**
[1] Remote Outdoor Air Temperature Sensor			**X2658**	**X2658**	**X2658**
[2] Discharge Air Temperature Sensor			**88K38**	**88K38**	**88K38**
Transformer (75VA)			**27J32**	**27J32**	**27J32**
FILTERS					
[3] Air Filter and Rack Kit	Horizontal (end)		**87L95**	**87L96**	**87L97**
		Size of filter - in.	14 x 25 x 1	18 x 25 x 1	20 x 25 x 1
	Side Return	Single	**44J22**	**44J22**	**44J22**
		Ten Pack	**66K63**	**66K63**	**66K63**
		Size of filter - in.	16 x 25 x 1	16 x 25 x 1	16 x 25 x 1
INTAKE / VENTING					
Combustion Air Intake Muffler Kit			**29K98**	**29K98**	**29K98**
Low Profile Air Intake Pipe Kit - 2 in.			**25B23**	**25B23**	**25B23**
Vent Adaptor − 6 in. connection size upflow applications only			**18M79**	**18M79**	**18M79**

[1] Remote Outdoor Temperature Sensor is used with conventional (non-Lennox®-enabled) outdoor units (sensor is furnished with Lennox®-enabled outdoor units). Allows the thermostat to display outdoor temperature. Required in dual-fuel and Humiditrol® applications.
[2] Optional for service diagnostics.
[3] Cleanable polyurethane, frame-type filter.

REFRIGERANT DETECTION SYSTEM (RDS) COMPONENTS

Description		Order No.
Refrigerant Detection System (RDS) Coil Sensor Kit		**26Z69**
Refrigerant Detection System (RDS) Blower Control Board	Any Lennox® Communicating Furnace or any Non-Communicating 24V Furnace (Universal)	**27A03**
	Any Non-Communicating 24V Furnace	**27A02**

NOTE - Communicating Blower Control Board and Sensor can be used universally with Lennox® communicating furnace or any non-communicating 24 volt furnace. Non-Communicating Blower Control Board and Sensor can be used with any non-communicating 24 volt furnace.

HIGH ALTITUDE OPERATION

Units may be installed at altitudes up to 7500 ft. above sea level without any modification.

[1] NOTE - 60C and 60D size units that require air volumes over 1800 cfm must have one of the following:
1. Single side return air and Optional Return Air Base with transition that must accommodate required 20 x 25 x 1 inch (508 x 635 x 25 mm) air filter to maintain proper velocity.
2. Bottom return air.
3. Return air from both sides.
4. Bottom and one side return air.

See Blower Performance Tables for additional information.

[2] Flue outlet is only on top of furnace **must** be vented vertically.
[3] Optional External Side Return Air Filter Kit is not for use with the optional Return Air Base.
[4] Optional External Side Return Air Filter Kit is not available for "A" width cabinets.
[5] 2-3/4 in. (70 mm) for optional Low Profile Air Intake Pipe Kit.

[6] NOTE - Gas entry is only available on the left side of the cabinet for "A" width cabinet models.

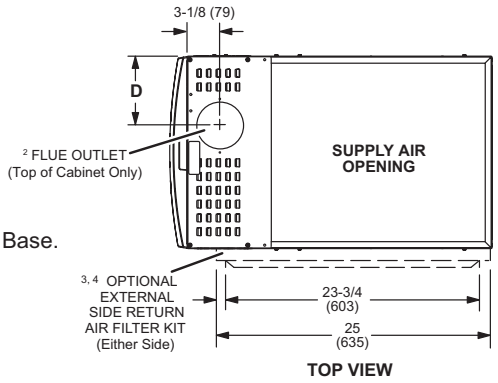

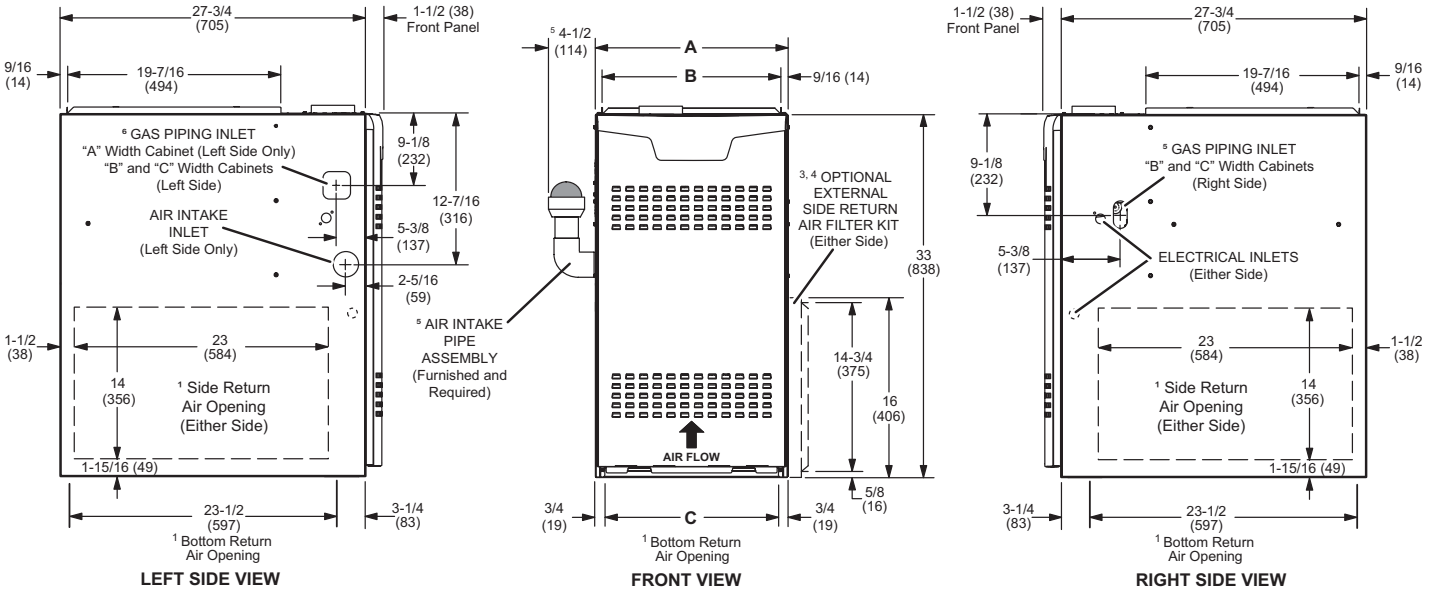

Model No.	A		B		C		D	
	in.	mm	in.	mm	in.	mm	in.	mm
SL280UH060NV36A	14-1/2	368	13-3/8	340	13	330	4-3/4	121
SL280UH080NV48B	17-1/2	446	16-3/8	416	16	406	6-1/4	159
SL280UH080NV60C SL280UH100NV60C	21	533	19-7/8	504	19-1/2	495	8	203

LEFT-HAND AIR DISCHARGE

NOTE - Air Intake Termination is only available on the bottom of the cabinet with left-hand air discharge.
NOTE - Air Intake Pipe must be FIRMLY secured in this position to prevent disconnection!

[1] NOTE - Gas entry is only available on the bottom of the cabinet for "A" width cabinet models with left-hand air discharge.

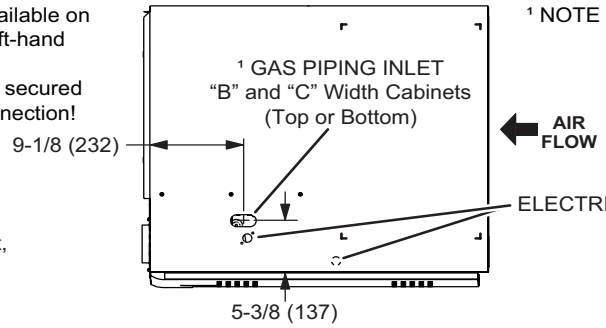

[2] Flue outlet is horizontal on cabinet, but flue must be vented vertically immediately after exiting cabinet!

TOP VIEW

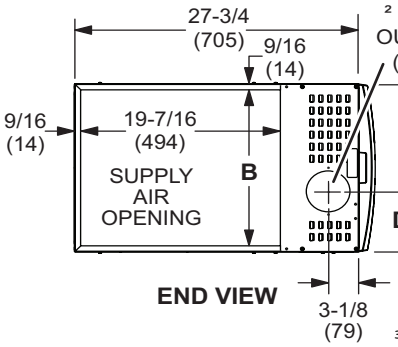

END VIEW

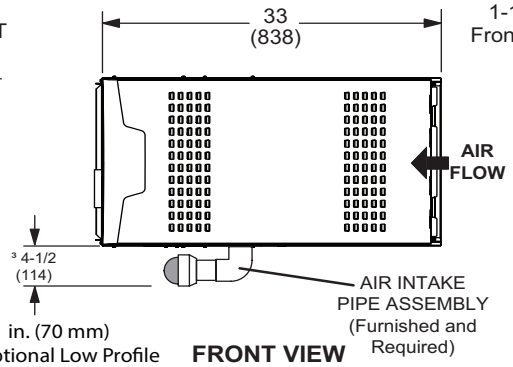

[3] 2-3/4 in. (70 mm) for optional Low Profile Air Intake Pipe Kit.

FRONT VIEW

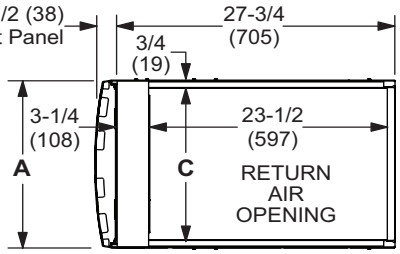

END VIEW

RIGHT-HAND AIR DISCHARGE

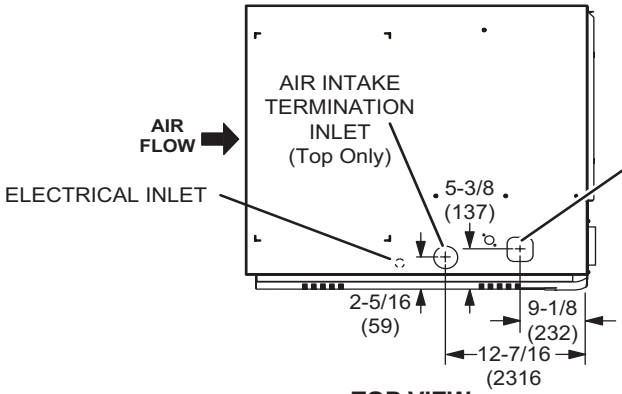

GAS PIPING INLET
"A" Width Cabinet
(Top Only)
"B" and "C" Width Cabinets
(Top or Bottom)

[2] Flue outlet is horizontal on cabinet, but flue must be vented vertically immediately after exiting cabinet!

[3] 2-3/4 in. (70 mm) for optional Low Profile Air Intake Pipe Kit.

TOP VIEW

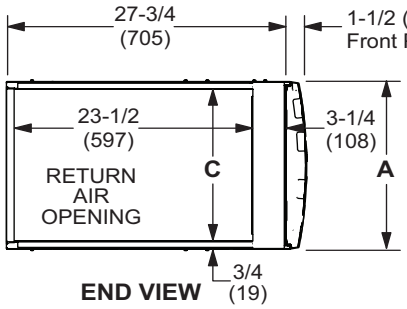

END VIEW

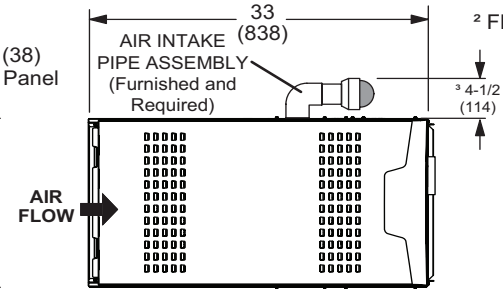

FRONT VIEW

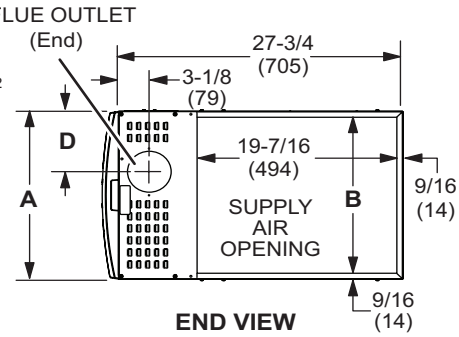

END VIEW

Model No.	A		B		C		D	
	in.	mm	in.	mm	in.	mm	in.	mm
SL280UH060NV36A	14-1/2	368	13-3/8	340	13	330	4-3/4	121
SL280UH080NV48B	17-1/2	446	16-3/8	416	16	406	6-1/4	159
SL280UH080NV60C SL280UH100NV60C	21	533	19-7/8	504	19-1/2	495	8	203

HORIZONTAL (END) FILTER KIT

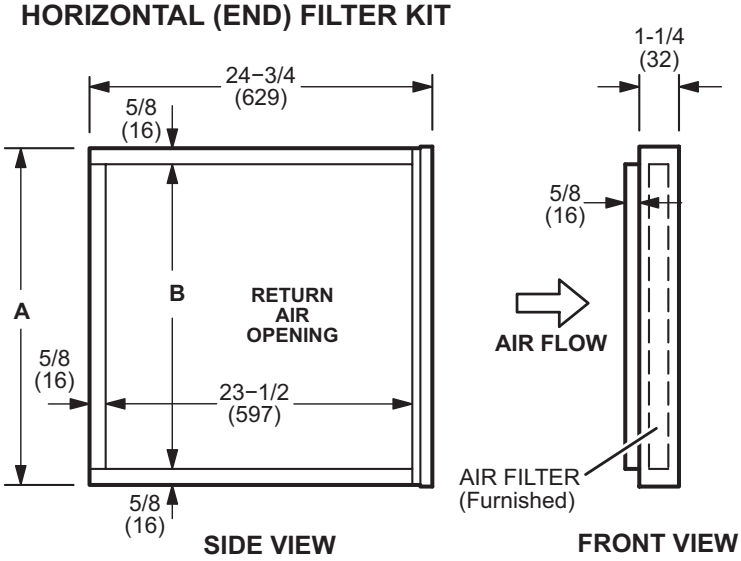

Furnace Cabinet Width	Catalog Number	A		B	
		in.	mm	in.	mm
A	**87L95**	14	356	12-3/4	324
B	**87L96**	18	457	16-3/4	425
C	**87L97**	21	533	18-3/4	476

COMBUSTION AIR INTAKE MUFFLER KIT
29K98 - 2-inch

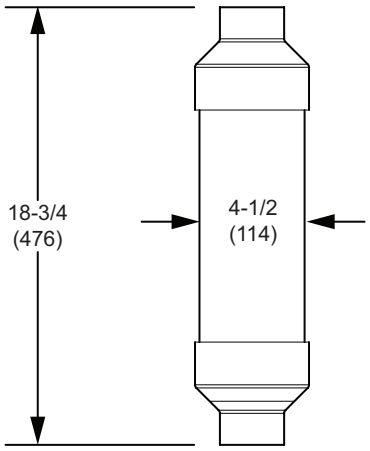

(Muffler can be installed in horizontal or vertical position on the intake pipe.)

Optional Return Air Base
(Upflow Applications Only - For use with A, B and C width cabinets)

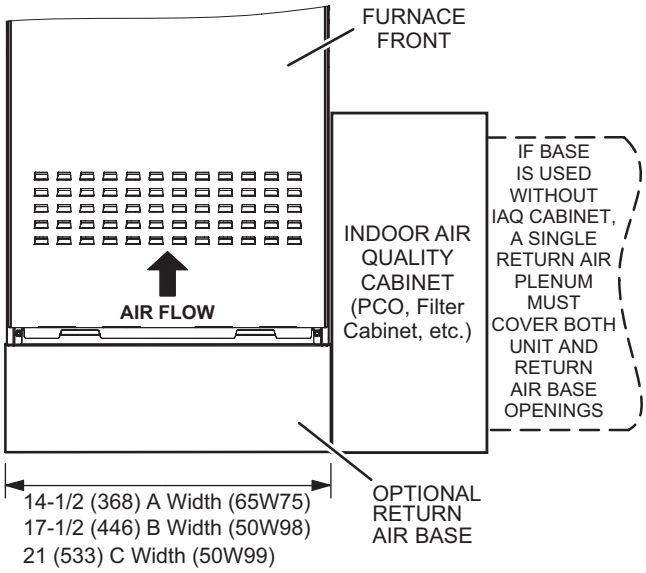

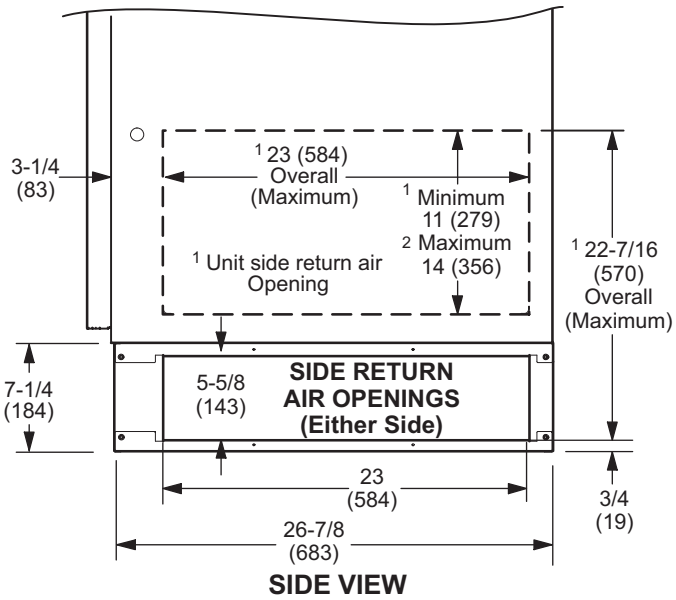

NOTE- Optional Side Return Air Filter Kits are not for use with Optional Return Air Base.

[1] Both the unit return air opening and the base return air opening must be covered by a single plenum or IAQ cabinet. Minimum unit side return air opening dimensions for units requiring 1800 cfm or more of air (W x H): 23 x 11 in. (584 x 279 mm). The opening can be cut as needed to accommodate plenum or IAQ cabinet while maintaining dimensions shown. Side return air openings must be cut in the field. There are cutting guides stenciled on the cabinet for the side return air opening. The size of the opening must not extend beyond the markings on the furnace cabinet.

[2] To minimize pressure drop, the largest opening height possible, up to 14 in. (356 mm), is preferred.

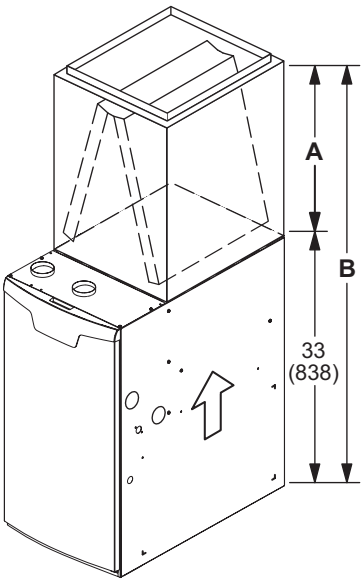

UPFLOW POSITION - CASED

Model		A		B	
CK40CT	**C35/CX35**	**in.**	**mm**	**in.**	**mm**
CK40CT-18/24B	C35/CX35-18/24B	16-1/2	419	49-1/2	1257
CK40CT-24B	C35/CX35-24B	18-1/2	470	51-1/2	1308
CK40CT-30B	C35/CX35-30B	22-1/2	572	55-1/2	1410
CK40CT-30/36B CK40CT-30/36C	C35/CX35-30/36B C35/CX35-30/36C	24-1/2	622	57-1/2	1461
CK40CT-36B	C35/CX35-36B	24-1/2	622	57-1/2	1461
CK40CT-48B CK40CT-48C	C35/CX35-48B C35/CX35-48C	27-1/2	699	60-1/2	1537
CK40CT-49C	C35/CX35-49C	29-1/2	749	62-1/2	1588
CK40CT-50/60C	C35/CX35-50/60C	27-1/2	699	60-1/2	1537
CK40CT-60C	CX35-60C	31-1/2	800	64-1/2	1638
CK40CT-60D	CX35-60D	29-1/2	749	62-1/2	1588

UPFLOW POSITION - UNCASED

Model		A		B	
CK40UT	**C35**	**in.**	**mm**	**in.**	**mm**
CK40UT-18/24B	C35-18/24B	14-1/8	359	47-1/8	1197
CK40UT-24B	C35-24B	16-3/8	416	49-3/8	1254
CK40UT-30B	C35-30B	20-3/4	527	53-3/4	1365
CK40UT-30/36B CK40UT-30/36C	C35-30/36B C35-30/36C	22-1/4	565	55-1/4	1403
CK40UT-36B	C35-36B	22-3/8	568	55-3/8	1407
CK40UT-48B CK40UT-48C	C35-48B C35-48C	26-1/4	667	59-1/4	1505
CK40UT-49C	C35-49C	28-1/2	724	61-1/2	1562
CK40UT-50/60C	C35-50/60C	25-7/8	657	58-7/8	1495
CK40UT-60C	C35-60C	30-5/8	778	63-5/8	1616
CK40UT-60D	C35-60D	28	711	61	1549

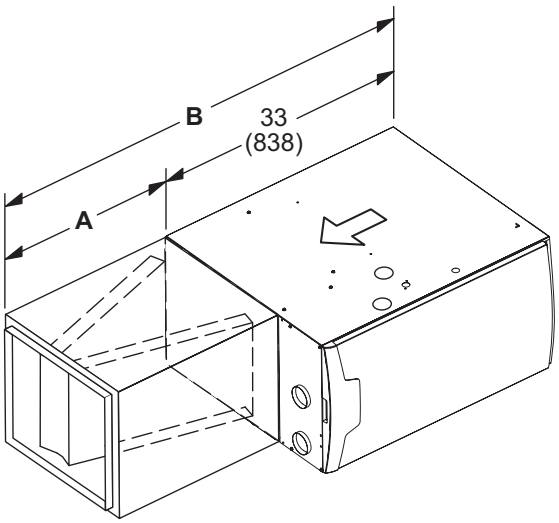

HORIZONTAL POSITION

Model		A		B	
CK40HT	**CHX35**	**in.**	**mm**	**in.**	**mm**
CK40HT-24B CK40HT-30B CK40HT-36B CK40HT-36C CK40HT-42C CK40HT-48C	CHX35-24B CHX35-30B CHX35-36B CHX35-36C CHX35-42C CHX35-48C	26-1/2	673	59-1/2	1511
CK40CT-42B CK40CT-48B CK40CT-51/61C CK40CT-60D	CHX35-42B CHX35-48B CHX35-51/61C CHX35-60D	31-1/2	880	64-1/2	1638

BLOWER DATA

SL280UH060NV36A BLOWER PERFORMANCE (less filter)
BOTTOM OR SIDE RETURN AIR
0 through 1.0 in. w.g. External Static Pressure Range

HEATING		
[1] Heating Speed DIP Switch Settings	First Stage Heating Speed - cfm	Second Stage Heating Speed - cfm
+24%	1015	1115
+18%	955	1060
+12%	895	995
+6%	845	935
Factory Default	785	875
–6%	730	815
–12%	685	755
–18%	630	700

COOLING								
[1] Cooling Speed DIP Switch Settings	First Stage Cooling Speed - cfm				Second Stage Cooling Speed - cfm			
	Low	Medium-Low	Medium-High	[2] High	Low	Medium-Low	Medium-High	[2] High
+	680	740	785	915	935	1025	1150	1295
Factory Default	625	660	720	815	835	930	1040	1185
–	565	580	650	740	745	825	925	1035

[1] Cooling and heating speeds are based on a combination of DIP switch settings on the furnace control. Refer to Installation Instructions for specific DIP Switch Settings.
[2] Factory default setting.

NOTES - The effect of static pressure is included in air volumes shown.
First stage HEAT is approximately 91% of the same second stage HEAT.
First stage COOL (two-stage air conditioning units only) is approximately 70% of the same second stage COOL speed position.
Continuous Fan Only speed is selectable at 28% and 38% of the selected second stage cooling speed - minimum 250 cfm.
Lennox® Smart Zoning System Applications - Minimum blower speed is 250 cfm.

SL280UH060NV36A BLOWER MOTOR WATTS (COOLING)

[1] Cooling Speed DIP Switch Settings		Motor Watts @ Various External Static Pressures - in. wg.																					
		First Stage											Second Stage										
+ Setting		0.0	0.1	0.2	0.3	0.4	0.5	0.6	0.7	0.8	0.9	1.0	0.0	0.1	0.2	0.3	0.4	0.5	0.6	0.7	0.8	0.9	1.0
Cooling Speed	Low	35	51	64	83	100	117	132	149	162	179	199	65	89	108	131	154	174	197	216	245	265	284
	Med-Low	40	57	70	91	113	124	143	161	177	199	213	83	110	133	152	178	200	224	249	272	295	323
	Med-High	47	65	83	100	123	140	161	182	200	216	233	112	145	165	191	217	240	270	295	325	350	372
	High	58	78	102	122	145	160	187	204	226	254	271	171	212	225	253	280	317	345	376	409	436	466
Factory Default		0.0	0.1	0.2	0.3	0.4	0.5	0.6	0.7	0.8	0.9	1.0	0.0	0.1	0.2	0.3	0.4	0.5	0.6	0.7	0.8	0.9	1.0
Cooling Speed	Low	28	39	57	74	90	104	120	135	152	165	174	51	69	91	112	132	152	171	192	210	232	252
	Med-Low	32	44	62	81	97	113	128	146	161	176	190	67	89	109	133	154	172	194	219	240	263	287
	Med-High	37	53	71	89	104	124	144	157	178	198	209	84	114	130	156	178	202	224	251	273	300	320
	High	47	65	85	102	122	143	162	184	203	222	237	116	140	173	198	226	254	278	313	332	355	388
– Setting		0.0	0.1	0.2	0.3	0.4	0.5	0.6	0.7	0.8	0.9	1.0	0.0	0.1	0.2	0.3	0.4	0.5	0.6	0.7	0.8	0.9	1.0
Cooling Speed	Low	23	34	49	65	81	96	110	122	136	145	164	41	57	75	93	116	133	151	165	184	203	221
	Med-Low	25	37	55	69	85	100	115	130	144	158	170	50	70	88	109	127	150	167	186	206	225	244
	Med-High	29	43	60	76	94	109	125	141	156	172	186	63	87	106	126	150	171	189	214	236	256	280
	High	41	56	75	91	110	128	144	164	180	198	211	84	110	134	159	181	205	228	250	272	303	331

BLOWER DATA

SL280UH080NV48B BLOWER PERFORMANCE (less filter)

BOTTOM RETURN AIR

0 through 1.0 in. w.g. External Static Pressure Range

HEATING		
[1] Heating Speed DIP Switch Settings	First Stage Heating Speed - cfm	Second Stage Heating Speed - cfm
+24%	1295	1445
+18%	1230	1375
+12%	1155	1290
+6%	1095	1215
Factory Default	1015	1145
–6%	950	1065
–12%	885	985
–18%	810	910

COOLING								
[1] Cooling Speed DIP Switch Settings	First Stage Cooling Speed - cfm				Second Stage Cooling Speed - cfm			
	Low	Medium-Low	Medium-High	[2] High	Low	Medium-Low	Medium-High	[2] High
+	635	880	1020	1190	990	1270	1490	1710
Factory Default	565	775	915	1070	885	1135	1345	1540
–	545	670	820	955	775	1015	1205	1390

[1] Cooling and heating speeds are based on a combination of DIP switch settings on the furnace control. Refer to Installation Instructions for specific DIP Switch Settings.

[2] Factory default setting.

NOTES - The effect of static pressure is included in air volumes shown.
First stage HEAT is approximately 91% of the same second stage HEAT.
First stage COOL (two-stage air conditioning units only) is approximately 70% of the same second stage COOL speed position.
Continuous Fan Only speed is selectable at 28% and 38% of the selected second stage cooling speed - minimum 380 cfm.
Lennox® Smart Zoning System Applications - Minimum blower speed is 380 cfm.

SL280UH080NV48B BLOWER MOTOR WATTS (COOLING)

[1] Cooling Speed DIP Switch Settings		Motor Watts @ Various External Static Pressures - in. wg.																					
		First Stage											Second Stage										
+ Setting		0.0	0.1	0.2	0.3	0.4	0.5	0.6	0.7	0.8	0.9	1.0	0.0	0.1	0.2	0.3	0.4	0.5	0.6	0.7	0.8	0.9	1.0
Cooling Speed	Low	19	42	64	87	110	135	162	182	202	227	252	63	86	118	150	181	211	241	270	297	325	353
	Med-Low	46	68	97	127	156	179	212	240	263	290	314	118	150	188	222	256	292	332	367	400	437	469
	Med-High	66	88	120	153	186	216	242	269	303	329	357	195	236	274	317	353	394	438	474	512	561	598
	High	102	131	166	200	235	271	300	336	366	398	429	298	345	387	433	479	525	570	617	658	710	755
Factory Default		0.0	0.1	0.2	0.3	0.4	0.5	0.6	0.7	0.8	0.9	1.0	0.0	0.1	0.2	0.3	0.4	0.5	0.6	0.7	0.8	0.9	1.0
Cooling Speed	Low	19	44	61	79	101	122	147	166	186	209	230	50	69	101	129	162	190	216	239	268	289	321
	Med-Low	32	51	80	106	136	159	188	211	236	258	281	88	119	149	182	220	252	289	317	349	379	411
	Med-High	49	71	99	131	162	188	213	245	269	296	320	146	182	217	258	289	329	366	407	439	478	508
	High	72	99	130	163	198	230	260	288	319	348	376	221	260	305	343	384	429	471	517	560	597	638
– Setting		0.0	0.1	0.2	0.3	0.4	0.5	0.6	0.7	0.8	0.9	1.0	0.0	0.1	0.2	0.3	0.4	0.5	0.6	0.7	0.8	0.9	1.0
Cooling Speed	Low	23	43	59	78	92	110	128	147	164	183	204	31	50	82	107	133	158	187	212	238	260	289
	Med-Low	22	42	66	91	116	142	164	185	208	230	255	61	89	117	148	180	212	243	273	299	335	356
	Med-High	41	59	87	121	148	171	197	221	250	274	291	103	133	170	206	237	276	309	346	374	403	442
	High	54	76	110	140	168	200	229	256	284	310	336	159	193	236	271	312	345	384	427	463	499	534

BLOWER DATA

SL280UH080NV48B BLOWER PERFORMANCE (less filter)

SIDE RETURN AIR

0 through 1.0 in. w.g. External Static Pressure Range

HEATING		
[1] Heating Speed DIP Switch Settings	First Stage Heating Speed - cfm	Second Stage Heating Speed - cfm
+24%	1290	1400
+18%	1215	1325
+12%	1145	1255
+6%	1075	1190
Factory Default	1000	1120
–6%	940	1050
–12%	875	970
–18%	800	890

COOLING								
[1] Cooling Speed DIP Switch Settings	First Stage Cooling Speed - cfm				Second Stage Cooling Speed - cfm			
	Low	Medium-Low	Medium-High	[2] High	Low	Medium-Low	Medium-High	[2] High
+	660	885	1005	1180	980	1250	1455	1660
Factory Default	565	785	920	1055	870	1125	1310	1500
–	540	700	815	945	780	1005	1185	1375

[1] Cooling and heating speeds are based on a combination of DIP switch settings on the furnace control. Refer to Installation Instructions for specific DIP Switch Settings.

[2] Factory default setting.

NOTES - The effect of static pressure is included in air volumes shown.
First stage HEAT is approximately 91% of the same second stage HEAT.
First stage COOL (two-stage air conditioning units only) is approximately 70% of the same second stage COOL speed position.
Continuous Fan Only speed is selectable at 28% and 38% of the selected second stage cooling speed - minimum 380 cfm.
Lennox® Smart Zoning System Applications - Minimum blower speed is 380 cfm.

SL280UH080NV48B BLOWER MOTOR WATTS (COOLING)

[1] Cooling Speed DIP Switch Settings		Motor Watts @ Various External Static Pressures - in. wg.																					
		First Stage											Second Stage										
+ Setting		0.0	0.1	0.2	0.3	0.4	0.5	0.6	0.7	0.8	0.9	1.0	0.0	0.1	0.2	0.3	0.4	0.5	0.6	0.7	0.8	0.9	1.0
Cooling Speed	Low	21	42	60	87	112	135	160	181	208	224	241	49	73	108	133	170	199	233	261	290	321	348
	Med-Low	39	61	90	123	152	181	205	231	262	288	316	97	131	171	206	237	272	314	350	392	422	456
	Med-High	53	79	110	144	175	204	236	267	295	325	357	157	200	237	281	323	363	408	446	489	532	575
	High	78	109	147	182	214	251	288	323	359	390	424	235	286	329	365	425	469	514	562	606	653	704
Factory Default		0.0	0.1	0.2	0.3	0.4	0.5	0.6	0.7	0.8	0.9	1.0	0.0	0.1	0.2	0.3	0.4	0.5	0.6	0.7	0.8	0.9	1.0
Cooling Speed	Low	23	45	65	81	104	126	147	171	193	210	226	42	62	98	127	152	181	209	235	264	290	318
	Med-Low	29	47	76	104	133	161	185	214	236	259	282	75	103	143	174	208	245	276	312	345	380	407
	Med-High	45	66	100	129	162	192	217	248	274	299	323	116	150	193	227	269	305	348	379	421	460	497
	High	56	84	118	153	188	218	253	287	314	346	384	168	211	249	298	334	382	427	471	508	549	591
– Setting		0.0	0.1	0.2	0.3	0.4	0.5	0.6	0.7	0.8	0.9	1.0	0.0	0.1	0.2	0.3	0.4	0.5	0.6	0.7	0.8	0.9	1.0
Cooling Speed	Low	22	40	58	75	92	111	126	143	159	179	201	32	48	77	110	137	163	186	213	235	262	283
	Med-Low	22	43	65	92	117	141	167	188	215	235	257	55	81	113	147	176	209	242	268	297	331	358
	Med-High	33	53	82	110	139	170	194	218	244	268	292	86	117	153	187	227	260	299	333	369	399	437
	High	40	64	96	127	162	190	218	248	279	304	337	131	164	210	249	287	326	366	407	447	484	520

BLOWER DATA

SL280UH080NV60C BLOWER PERFORMANCE (less filter)

BOTTOM RETURN AIR

0 through 1.0 in. w.g. External Static Pressure Range

HEATING		
[1] Heating Speed DIP Switch Settings	First Stage Heating Speed - cfm	Second Stage Heating Speed - cfm
+24%	1330	1455
+18%	1260	1385
+12%	1210	1320
+6%	1135	1250
Factory Default	1070	1165
–6%	1005	1100
–12%	930	1025
–18%	865	955

COOLING								
[1] Cooling Speed DIP Switch Settings	First Stage Cooling Speed - cfm				Second Stage Cooling Speed - cfm			
	Low	Medium-Low	Medium-High	[2] High	Low	Medium-Low	Medium-High	[2] High
+	1040	1170	1335	1590	1470	1640	1870	2205
Factory Default	945	1065	1230	1440	1340	1495	1715	1985
–	830	955	1105	1300	1205	1340	1545	1790

[1] Cooling and heating speeds are based on a combination of DIP switch settings on the furnace control. Refer to Installation Instructions for specific DIP Switch Settings.

[2] Factory default setting.

NOTES - The effect of static pressure is included in air volumes shown.
First stage HEAT is approximately 91% of the same second stage HEAT.
First stage COOL (two-stage air conditioning units only) is approximately 70% of the same second stage COOL speed position.
Continuous Fan Only speed is selectable at 28% and 38% of the selected second stage cooling speed - minimum 450 cfm.
Lennox® Smart Zoning System Applications - Minimum blower speed is 450 cfm.

SL280UH080NV60C BLOWER MOTOR WATTS (COOLING)

[1] Cooling Speed DIP Switch Settings		Motor Watts @ Various External Static Pressures - in. wg.																					
		First Stage											Second Stage										
+ Setting		0.0	0.1	0.2	0.3	0.4	0.5	0.6	0.7	0.8	0.9	1.0	0.0	0.1	0.2	0.3	0.4	0.5	0.6	0.7	0.8	0.9	1.0
Cooling Speed	Low	68	90	113	143	166	195	220	244	266	291	319	154	187	228	262	300	336	375	411	444	483	521
	Med-Low	85	109	138	169	200	224	254	284	309	337	368	207	246	286	328	368	409	444	487	523	567	608
	Med-High	119	148	182	216	248	284	316	349	380	409	444	308	357	398	450	499	543	594	643	694	734	784
	High	181	216	261	298	335	375	409	454	496	527	564	557	574	638	700	756	808	867	923	981	1030	1079
Factory Default		0.0	0.1	0.2	0.3	0.4	0.5	0.6	0.7	0.8	0.9	1.0	0.0	0.1	0.2	0.3	0.4	0.5	0.6	0.7	0.8	0.9	1.0
Cooling Speed	Low	54	73	96	119	148	171	195	216	240	262	280	115	146	181	214	249	283	316	344	379	413	444
	Med-Low	67	88	114	143	172	199	227	252	274	301	322	157	192	228	266	303	346	382	415	455	489	524
	Med-High	99	120	158	186	217	249	275	308	337	361	391	237	284	325	359	405	441	489	538	569	619	660
	High	150	179	217	256	284	319	358	390	424	461	486	375	423	474	539	580	636	678	733	782	836	883
– Setting		0.0	0.1	0.2	0.3	0.4	0.5	0.6	0.7	0.8	0.9	1.0	0.0	0.1	0.2	0.3	0.4	0.5	0.6	0.7	0.8	0.9	1.0
Cooling Speed	Low	45	56	86	108	130	150	173	196	212	231	253	90	116	147	179	208	241	267	300	332	359	387
	Med-Low	59	75	103	130	150	177	199	224	245	266	286	117	147	180	214	251	283	322	350	382	423	447
	Med-High	75	94	123	154	183	210	235	264	287	313	337	177	216	254	287	328	363	404	443	478	514	553
	High	113	139	173	204	238	268	297	331	359	389	418	282	330	371	411	458	507	548	598	644	687	727

BLOWER DATA

SL280UH080NV60C BLOWER PERFORMANCE (less filter)

SIDE RETURN AIR

0 through 1.0 in. w.g. External Static Pressure Range

HEATING		
[1] Heating Speed DIP Switch Settings	First Stage Heating Speed - cfm	Second Stage Heating Speed - cfm
+24%	1290	1400
+18%	1215	1325
+12%	1145	1255
+6%	1075	1190
Factory Default	1000	1120
–6%	940	1050
–12%	875	970
–18%	800	890

COOLING								
[1] Cooling Speed DIP Switch Settings	First Stage Cooling Speed - cfm				Second Stage Cooling Speed - cfm			
	Low	Medium-Low	Medium-High	[2] High	Low	Medium-Low	Medium-High	[2] High
+	660	885	1005	1180	980	1250	1455	1660
Factory Default	565	785	920	1055	870	1125	1310	**1500**
–	540	700	815	945	780	1005	1185	1375

[1] Cooling and heating speeds are based on a combination of DIP switch settings on the furnace control. Refer to Installation Instructions for specific DIP Switch Settings.

[2] Factory default setting.

NOTES - The effect of static pressure is included in air volumes shown.
First stage HEAT is approximately 91% of the same second stage HEAT.
First stage COOL (two-stage air conditioning units only) is approximately 70% of the same second stage COOL speed position.
Continuous Fan Only speed is selectable at 28% and 38% of the selected second stage cooling speed - minimum 450 cfm.
Lennox® Smart Zoning System Applications - Minimum blower speed is 450 cfm.

SL280UH080NV60C BLOWER MOTOR WATTS (COOLING)

[1] Cooling Speed DIP Switch Settings		Motor Watts @ Various External Static Pressures - in. wg.																					
		First Stage											Second Stage										
+ Setting		**0.0**	**0.1**	**0.2**	**0.3**	**0.4**	**0.5**	**0.6**	**0.7**	**0.8**	**0.9**	**1.0**	**0.0**	**0.1**	**0.2**	**0.3**	**0.4**	**0.5**	**0.6**	**0.7**	**0.8**	**0.9**	**1.0**
Cooling Speed	Low	21	42	60	87	112	135	160	181	208	224	241	49	73	108	133	170	199	233	261	290	321	348
	Med-Low	39	61	90	123	152	181	205	231	262	288	316	97	131	171	206	237	272	314	350	392	422	456
	Med-High	53	79	110	144	175	204	236	267	295	325	357	157	200	237	281	323	363	408	446	489	532	575
	High	78	109	147	182	214	251	288	323	359	390	424	235	286	329	365	425	469	514	562	606	653	704
Factory Default		**0.0**	**0.1**	**0.2**	**0.3**	**0.4**	**0.5**	**0.6**	**0.7**	**0.8**	**0.9**	**1.0**	**0.0**	**0.1**	**0.2**	**0.3**	**0.4**	**0.5**	**0.6**	**0.7**	**0.8**	**0.9**	**1.0**
Cooling Speed	Low	23	45	65	81	104	126	147	171	193	210	226	42	62	98	127	152	181	209	235	264	290	318
	Med-Low	29	47	76	104	133	161	185	214	236	259	282	75	103	143	174	208	245	276	312	345	380	407
	Med-High	45	66	100	129	162	192	217	248	274	299	323	116	150	193	227	269	305	348	379	421	460	497
	High	56	84	118	153	188	218	253	287	314	346	384	168	211	249	298	334	382	427	471	508	549	591
– Setting		**0.0**	**0.1**	**0.2**	**0.3**	**0.4**	**0.5**	**0.6**	**0.7**	**0.8**	**0.9**	**1.0**	**0.0**	**0.1**	**0.2**	**0.3**	**0.4**	**0.5**	**0.6**	**0.7**	**0.8**	**0.9**	**1.0**
Cooling Speed	Low	22	40	58	75	92	111	126	143	159	179	201	32	48	77	110	137	163	186	213	235	262	283
	Med-Low	22	43	65	92	117	141	167	188	215	235	257	55	81	113	147	176	209	242	268	297	331	358
	Med-High	33	53	82	110	139	170	194	218	244	268	292	86	117	153	187	227	260	299	333	369	399	437
	High	40	64	96	127	162	190	218	248	279	304	337	131	164	210	249	287	326	366	407	447	484	520

BLOWER DATA

SL280UH100NV60C BLOWER PERFORMANCE (less filter)

BOTTOM RETURN AIR

0 through 1.0 in. w.g. External Static Pressure Range

HEATING		
[1] Heating Speed DIP Switch Settings	First Stage Heating Speed - cfm	Second Stage Heating Speed - cfm
+24%	1600	1770
+18%	1510	1670
+12%	1435	1585
+6%	1355	1505
Factory Default	1275	1415
–6%	1185	1335
–12%	1120	1245
–18%	1035	1155

COOLING								
[1] Cooling Speed DIP Switch Settings	First Stage Cooling Speed - cfm				Second Stage Cooling Speed - cfm			
	Low	Medium-Low	Medium-High	[2] High	Low	Medium-Low	Medium-High	[2] High
+	1095	1160	1285	1485	1570	1645	1830	2125
Factory Default	1005	1075	1175	1355	1425	1485	1660	1910
–	925	960	1070	1215	1275	1330	1490	1720

[1] Cooling and heating speeds are based on a combination of DIP switch settings on the furnace control. Refer to Installation Instructions for specific DIP Switch Settings.

[2] Factory default setting.

NOTES - The effect of static pressure is included in air volumes shown.
First stage HEAT is approximately 91% of the same second stage HEAT.
First stage COOL (two-stage air conditioning units only) is approximately 70% of the same second stage COOL speed position.
Continuous Fan Only speed is selectable at 28% and 38% of the selected second stage cooling speed - minimum 450 cfm.
Lennox® Smart Zoning System Applications - Minimum blower speed is 450 cfm.

SL280UH100NV60C BLOWER MOTOR WATTS (COOLING)

[1] Cooling Speed DIP Switch Settings		Motor Watts @ Various External Static Pressures - in. wg.																					
		First Stage											Second Stage										
+ Setting		0.0	0.1	0.2	0.3	0.4	0.5	0.6	0.7	0.8	0.9	1.0	0.0	0.1	0.2	0.3	0.4	0.5	0.6	0.7	0.8	0.9	1.0
Cooling Speed	Low	76	96	124	153	183	210	237	265	289	315	336	194	226	273	310	349	394	429	464	504	541	585
	Med-Low	90	112	140	172	199	228	257	287	312	337	362	209	254	286	334	375	415	458	498	539	580	623
	Med-High	109	137	169	200	233	265	296	327	358	384	422	280	322	367	420	472	515	559	609	656	696	746
	High	154	192	221	263	301	339	379	416	446	483	521	482	525	582	636	684	741	801	856	909	974	1016
Factory Default		0.0	0.1	0.2	0.3	0.4	0.5	0.6	0.7	0.8	0.9	1.0	0.0	0.1	0.2	0.3	0.4	0.5	0.6	0.7	0.8	0.9	1.0
Cooling Speed	Low	64	80	109	135	163	188	212	237	257	280	304	148	184	214	251	289	322	361	393	432	467	498
	Med-Low	73	94	119	143	174	199	228	251	272	301	320	175	208	246	287	318	361	397	431	465	507	546
	Med-High	93	116	146	175	204	234	261	290	319	346	371	219	258	299	345	387	425	468	511	548	588	627
	High	125	152	190	224	252	290	323	356	389	420	451	331	383	428	475	534	586	629	685	733	780	832
– Setting		0.0	0.1	0.2	0.3	0.4	0.5	0.6	0.7	0.8	0.9	1.0	0.0	0.1	0.2	0.3	0.4	0.5	0.6	0.7	0.8	0.9	1.0
Cooling Speed	Low	52	68	92	116	140	166	186	209	227	250	267	112	139	175	202	237	267	300	331	366	393	422
	Med-Low	56	72	98	123	150	176	195	219	242	261	281	128	158	192	224	260	295	328	361	398	425	456
	Med-High	72	93	118	145	172	203	224	250	272	298	319	158	195	228	265	307	343	379	417	457	491	528
	High	94	118	149	184	214	239	272	304	335	362	389	239	277	326	365	418	462	505	550	594	634	675

BLOWER DATA

SL280UH100NV60C BLOWER PERFORMANCE (less filter)

SIDE RETURN AIR

0 through 1.0 in. w.g. External Static Pressure Range

HEATING		
[1] Heating Speed DIP Switch Settings	First Stage Heating Speed - cfm	Second Stage Heating Speed - cfm
+24%	1580	1735
+18%	1495	1640
+12%	1420	1550
+6%	1335	1480
Factory Default	1265	1395
–6%	1175	1300
–12%	1110	1220
–18%	1035	1135

COOLING								
[1] Cooling Speed DIP Switch Settings	First Stage Cooling Speed - cfm				Second Stage Cooling Speed - cfm			
	Low	Medium-Low	Medium-High	[2] High	Low	Medium-Low	Medium-High	[2] High
+	1105	1155	1280	1470	1535	1615	1765	2050
Factory Default	995	1055	1175	1325	1375	1435	1600	1855
–	900	945	1050	1215	1260	1305	1435	1670

[1] Cooling and heating speeds are based on a combination of DIP switch settings on the furnace control. Refer to Installation Instructions for specific DIP Switch Settings.

[2] Factory default setting.

NOTES - The effect of static pressure is included in air volumes shown.
First stage HEAT is approximately 91% of the same second stage HEAT.
First stage COOL (two-stage air conditioning units only) is approximately 70% of the same second stage COOL speed position.
Continuous Fan Only speed is selectable at 28% and 38% of the selected second stage cooling speed - minimum 450 cfm.
Lennox® Smart Zoning System Applications - Minimum blower speed is 450 cfm.

SL280UH100NV60C BLOWER MOTOR WATTS (COOLING)

[1] Cooling Speed DIP Switch Settings		Motor Watts @ Various External Static Pressures - in. wg.																					
		First Stage											Second Stage										
+ Setting		0.0	0.1	0.2	0.3	0.4	0.5	0.6	0.7	0.8	0.9	1.0	0.0	0.1	0.2	0.3	0.4	0.5	0.6	0.7	0.8	0.9	1.0
Cooling Speed	Low	75	92	123	154	182	214	238	266	291	317	338	168	204	246	286	327	362	407	449	482	524	564
	Med-Low	80	99	132	162	195	221	250	277	305	330	356	206	238	286	327	367	412	455	490	535	567	613
	Med-High	104	128	164	197	230	260	297	324	355	385	413	250	293	342	389	439	488	535	574	621	672	710
	High	157	183	228	264	302	342	375	412	450	483	512	414	457	514	588	636	696	750	800	862	914	963
Factory Default		0.0	0.1	0.2	0.3	0.4	0.5	0.6	0.7	0.8	0.9	1.0	0.0	0.1	0.2	0.3	0.4	0.5	0.6	0.7	0.8	0.9	1.0
Cooling Speed	Low	64	84	105	137	159	183	212	233	259	281	297	129	161	197	229	270	303	341	375	413	442	477
	Med-Low	67	84	113	143	169	196	221	249	267	295	316	153	185	226	260	302	338	375	411	443	480	521
	Med-High	85	105	136	168	198	230	258	283	310	333	364	193	235	272	315	359	397	437	486	526	567	602
	High	121	150	182	221	249	287	320	352	386	417	445	293	338	391	442	493	547	594	644	694	740	787
– Setting		0.0	0.1	0.2	0.3	0.4	0.5	0.6	0.7	0.8	0.9	1.0	0.0	0.1	0.2	0.3	0.4	0.5	0.6	0.7	0.8	0.9	1.0
Cooling Speed	Low	49	65	89	117	141	164	185	204	225	248	270	102	128	159	195	231	259	295	325	355	385	413
	Med-Low	59	78	102	126	151	175	197	219	242	262	286	118	149	180	215	248	281	320	351	385	417	443
	Med-High	63	80	109	140	167	193	221	246	269	294	315	156	183	228	267	308	342	381	418	451	485	522
	High	95	116	151	182	213	244	272	303	328	356	387	214	254	299	344	389	435	480	523	564	604	651

REVISIONS

Sections	Description of Change
Options/Accessories	Added new Combustion Air Intake Muffler

Visit us at www.Lennox.com
For the latest technical information, www.LennoxPros.com
Contact us at 1-800-9-LENNOX

NOTE - Due to Lennox' ongoing commitment to quality, Specifications, Ratings and Dimensions subject to change without notice and without incurring liability.
Improper installation, adjustment, alteration, service or maintenance can cause property damage or personal injury.
Installation and service must be performed by a qualified installer and servicing agency.

©2025 Lennox Industries, Inc.