GAS FURNACES

SL280DFV

DAVE LENNOX *SIGNATURE*® COLLECTION

Downflow - Two-Stage Heat - Variable Speed Blower - 60Hz

RESIDENTIAL PRODUCT SPECIFICATIONS

Bulletin No. 210601
July 2024
Supersedes all previous versions

S40 Smart Wi-Fi
Communicating Thermostat
(Not Furnished)

AFUE - 80%
Input - 66,000 to 110,000 Btuh
Nominal Add-on Cooling - 2 to 5 Tons

MODEL NUMBER IDENTIFICATION

SL 2 80 DF 070 X V 36 A

Unit Type
SL = Dave Lennox *Signature*® Collection

Stages
2 = Two-Stage

AFUE
80 = 80%

Configuration
DF = Downflow

Nominal Gas Heat Input
070 = 66,000 Btuh
090 = 88,000 Btuh
110 = 110,000 Btuh

[1] Cabinet Width
A = 14-1/2 in.
B = 17-1/2 in.
C = 21 in.

Nominal Add-On Cooling Capacity
36 = 2-3 tons
48 = 3-4 tons
60 = 3.5-5 tons

Blower
V = Variable Speed Blower Motor

Low NOX
X = Units meet California Nitrogen Oxides Standard (40 ng/J)

[1] Downflow indoor coils with the same letter designation physically matches the furnace **supply air opening**.

FEATURE HIGHLIGHTS

1. SilentComfort™ Technology
2. Lennox Duralok™ Heat Exchanger Assembly
3. Inshot Burners
4. SureLight® Hot Surface Ignitor
5. Two-Stage Gas Control Valve
6. Two-Speed Combustion Air Inducer
7. Flame Roll-Out Switch
8. Variable Speed Direct Drive Blower
9. SureLight® Integrated Furnace Control
10. Insulated Cabinet
11. Safety Interlock Switch
12. Gas Piping and Electrical Inlets

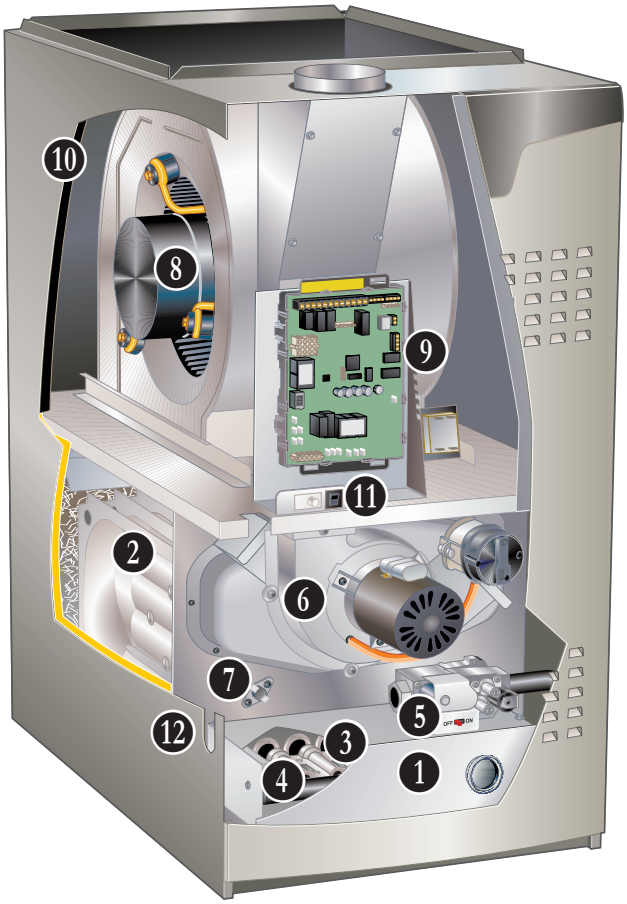

NOTE - SL280V FURNACES ARE NOT AVAILABLE IN CANADA!
NOTE - SL280V FURNACES CANNOT BE TWINNED!

CONTENTS

Blower Data 13
Approvals And Warranty 3
Dimensions 10
- Furnace/Coil Combined Dimensions 12
- Optional Accessories 11
- Unit 10
Features 3
Gas Heat Accessories 9
High Altitude Derate 9
Installation Clearances 9
Model Number Identification. 1
Optional Accessories - Order Separately 8
Specifications 8

APPROVALS AND WARRANTY

APPROVALS

- AHRI Certified
- Tested and rated according to US DOE test procedures and FTC labeling regulations
- "X" models approved by the California Energy Commission and meets California Nitrogen Oxides Standard (NOx) limits of 40 ng/J
- ISO 9001 Registered Manufacturing Quality System
- Blower data from unit tests conducted in Lennox Laboratory air test chamber

NOTE - This furnace has not been CSA International design certified for installation in mobile homes, recreational vehicles, or outdoors.

California Only

- These furnaces **do not meet** the South Coast Air Quality Management District (SCAQMD) Rule 1111 and San Joaquin Valley Air Pollution Control District (SJVAPCD) Rule 4905 NOx emission limit (14 ng/J) and cannot be installed within the SCAQMD and SJVAPCD areas
- All "X" model furnaces are approved by the California Energy Commission and meets California Nitrogen Oxides Standard (NOx) limits of 40 ng/J

WARRANTY

- Heat Exchanger:
  - Limited twenty years in residential applications
  - Limited ten years in non-residential applications
- All other covered components:
  - Limited ten years in residential installations
  - Limited one year in non-residential installations

NOTE - Refer to Lennox® Basic Limited Warrenty at www.Lennox.com for additional details.

FEATURES

APPLICATIONS

- Input capacities of 66,000, 88,000 and 110,000 Btuh
- Energy efficiency (AFUE) - 80%
- Compact cabinet
- Lennox add-on indoor coils, high-efficiency air cleaners and humidifiers can easily be added to furnace
- Shipped factory assembled with all controls installed and wired
- Each unit factory test operated to ensure proper operation

ZONING APPLICATIONS

- Can be used with the Lennox® Smart Zoning System with the Lennox® Communicating Thermostat
- Lennox® Smart Zoning System provides direct feedback to the furnace, controlling both airflow and heat output to match the comfort requirements for up to four zones

HEATING SYSTEM

1 SilentComfort™ Technology
- Patent pending burner sound enclosure and extra cabinet insulation reduces operating sound levels

2 Lennox Duralok™ Heat Exchanger Assembly
- Heavy gauge aluminized steel heat exchanger
- Crimped seam clamshell design
- Designed for normal expansion and contraction
- Minimum resistance to air flow
- Laboratory life cycle tested in excess of industry standards
- Compact size of permits low overall design of furnace cabinet

3 Inshot Burners
- Aluminized steel inshot burners provide efficient, trouble-free operation
- Burner venturi mixes air and gas in correct proportion for proper combustion
- Burner assembly is removable from the unit as a single component for ease of service

4 SureLight® Hot Surface Ignitor
- Tough, reliable, long-life, trouble-free performance
- Silicon nitride ignitor
- Cemented to steatite block for protection against current leakage
- Ignition leads are constructed of nickel plated copper and are enclosed in high temperature Teflon® insulation for dependable operation

5 Two-Stage Gas Control Valve
- 24 volt redundant combination two-stage gas control valve combines manual shut off switch (On-Off automatic electric valve (dual) and gas pressure regulation into a compact combination control

HEATING SYSTEM (continued)

6 Two-Speed Combustion Air Inducer
- Heavy duty, permanent split capacitor (PSC) two-speed blower prepurges heat exchanger and safely vents flue products
- Dual pressure switches (low fire/high fire) prove blower operation before allowing gas valve to open
- Operates only during heating cycle

7 Flame Rollout Switches (2)
- Factory installed on burner box
- Switches provide protection from abnormal operating conditions
- Manual reset

Limit Controls
- Primary limit located on vestibule panel
- Secondary limit located on blower housing
- Automatic reset

Optional Accessories

High Altitude Pressure Switch Kit
- Required on most units for proper unit operation at altitudes from 4501 to 10,000 ft.

Natural Gas to LPG/Propane Conversion Kit
- Required for field changeover from natural gas to LPG/Propane

LPG/Propane to Natural Gas Conversion Kit
- Required for field changeover from LPG/Propane to natural gas

BLOWER

8 Variable Speed Direct Drive Blower
- Each blower assembly statically and dynamically balanced
- Blower assembly easily removed for servicing

Variable Speed Blower Motor
- Variable speed motor maintains specified air volume from 0 though 0.8 in. w.g. (heating) and 0 through 1.0 in. w.g. (Cooling) static range
- Variable speed operation is achieved by the use of an ECM (Electronically Commutated Motor) motor
- Motor is controlled by furnace control
- Change in blower speed is easily accomplished by simple DIP switch change on furnace control
- Motor is resiliently mounted
- See Blower Data tables

NOTE - When furnaces are used with the Lennox® Smart Zoning System and the Lennox® Communicating Thermostat, the blower motor operates from predetermined minimum - maximum air volumes to satisfy zone requirements.

NOTE - When furnaces are used with the Lennox® Smart Zoning System and the Lennox® Communicating Thermostat, the blower motor operates from predetermined minimum - maximum air volumes to satisfy zone requirements.

CONTROLS

9 SureLight® Integrated Furnace Control (Lennox™ Communicating)

- Advanced control communicates information about various operating parameters in the furnace to the optional Lennox® Communicating Thermostat to constantly maintain the highest level of comfort and performance available
- Auto Configuration - On start-up the control automatically sends a description of the unit to the optional Lennox® Communicating Thermostat to automatically configure the number of stages and features available
- Terminals for connecting a conventional heating/cooling thermostat are also provided on the control
- Control also features Innovative AirFlex™ technology allows custom blower settings based on the application
- Thermostat Control - For optimal performance, the use of a high-quality, digital two-stage thermostat with adjustable settings for first stage/second stage, on/off differentials and adjustable stage timers is recommended

Furnace Input Staging Options

Thermostat Type	Input Staging Available
Lennox® Communicating Thermostat	Two-Stage (65 and 100%)
Two-Stage (Conventional)	
Single-Stage (Conventional)	

- Safety Controls - Flame sensor utilizes flame rectification for safe and reliable operation
- Should flame fail to ignite, control will initiate 4 re-attempts at ignition before locking out unit operation for 60 minutes
- Watchguard type circuit automatically resets ignition controls after one hour of continuous thermostat demand after unit lockout, eliminating calls for service
- Display LED - Seven segment LED displays alpha-numeric information related to diagnostics as well as system operation and status
- Diagnostic codes are held in non-volatile memory, immune from power interruptions
- Stores up to ten diagnostic codes in order of occurrence for recall on demand
- Port on blower door allows for easy viewing

CONTROLS (continued)

DIP Switch Settings

- Select Thermostat Used - Single-Stage or Two-Stage
- Two selectable second stage recognition times (7 and 12 minutes) are available on the control when the furnace is used with a single-stage thermostat
- When used with a two-stage thermostat, furnace will only initiate second stage operation with a second stage thermostat demand
- Heating Speeds - A combination of DIP switch settings allow the following motor speed selection settings within the heating speed selected for fine tuning air volume
  - Factory default
  - 6%, 12%, 18% or 24% increase
  - 6%, 12% or 18% decrease
  - See Blower Performance tables
- Cooling Speeds - A combination of DIP switch settings allow the following motor speed selection settings within the cooling speed selected for fine tuning air volume
  - Factory default
  - 10% increase
  - 10% decrease
  - See Blower Performance tables
- Blower Speed Ramping (Cooling Mode) - DIP switch settings allow one of four blower speed profiles during cooling operation
  - Profile A (factory setting) - Motor runs at 50% for 30 seconds, then at 82% for 7-1/2 minutes, then at 100% (if needed) until demand is satisfied. Once demand is met, motor runs at 50% for 30 seconds, then ramps down to stop
  - Profile B - Motor runs at 82% for 7-1/2 minutes and then at 100% (if needed) until demand is satisfied. Once demand is met, motor ramps down to stop
  - Profile C - Motor runs at 100% until demand is satisfied. Once demand is met, motor runs at 100% for 60 seconds, then ramps down to stop
  - Profile D - Motor runs at 100% until demand is satisfied. Once demand is met, motor ramps down to stop
- Dehumidification (Active or Humiditrol® Option) - A jumper on the control must be clipped to enable active dehumidification and/or operation with a Humiditrol® Whole-Home Dehumidification System
- A humidity controlling thermostat or device is also required
- During a call for cooling, air volume is automatically reduced, forcing humidity removal by the air conditioner or heat pump system
- After the humidity has reached the desired set-point the cooling air volume returns to its designed rate. A dehumidification signal from the thermostat reduces the cooling cfm to 70% of the requested cooling cfm
- Dual-Fuel Operation - A jumper on the control must be clipped to enable operation with a single or two-stage heat pump. The indoor blower is started without delay when a call for heat is received
- Two-Stage Compressor Operation - A jumper on the control must be clipped to enable operation with a two-stage compressor
- Lennox System Operations Monitor Connection - Monitors outdoor unit operation (communicating mode)
- Blower On/Off Time (Heating) - Blower on time is fixed at 30 seconds, blower off time is adjustable from 60, 90, 120 and 180 seconds (factory setting - 90 seconds)
- Blower On/Off Time (Cooling) - For air-conditioning applications, blower on time is 2 seconds following thermostat demand for cooling
- See Blower Speed Ramping (Cooling Mode) profiles for various blower off details
- Controls evaporator humidity by controlling blower and compressor speed on two-stage outdoor units when used with the Lennox® Communicating Thermostat
- Continuous Blower Speed - Adjustable continuous blower speed is a percentage of the high cooling speed selection
- Four selectable options (via DIP switch settings) of 28%, 38% (default setting), 70% and 100%
- Accessory Terminal - One accessory terminal furnished for additional power supply requirements for 120 volt (less than 1 amp) powered air cleaners
- One un-powered pair of contacts are provided for humidifier connections and may be connected to 24V or 120V
- Control is factory installed in the unit control box

24 Volt Transformer (40VA)

- Furnished and factory installed on outside of control box
- Circuit breaker (furnished) is wired in series

Field Wiring Make-Up Box

- Furnished for line voltage wiring
- Factory installed internally on left side of furnace
- Box may be installed internally on right side of furnace

CONTROLS (continued)

Optional Accessories

S40 Smart Wi-Fi Thermostat (part of the Lennox® Residential Communicating Control System)

- Recognizes and connects to all Lennox® Communicating products to automatically configure and control the heating/cooling system (based on user-specified settings) for the highest level of comfort, performance and efficiency

- Recognizes model and serial number information for Lennox® Communicating products to simplify system setup
- Lennox Smart Room Sensors, Lennox Wireless Extenders and Lennox Smart Air Quality Monitor can be added to the system
- Smart home automation compatible with Amazon Alexa®, Google Assistant, Control4® and Building36®
- Sends service alerts and reminders
- Lennox Smart Thermostat App features Wi-Fi remote temperature monitoring and adjustment through a home wireless network apps for smartphones or tablets
- Lennox Smart Technician App allows installer to manage systems in the home
- Service Dashboard features online real-time monitoring and advanced diagnostics of installed Lennox® Communicating systems
- Simple easy-to-use touchscreen allows complete system configuration
- Scheduled maintenance alerts, system warnings and troubleshooting are also displayed on thermostat screen
- Easy to read 7 inch high definition color display (measured diagonally)
- Conventional outdoor units (not Lennox® Communicating) can easily be added and controlled by the S40 Thermostat
- Installer setup screens allow quick and simple system configuration without a manual, Installer can also run tests on complete system or individual components for easy maintenance and troubleshooting
- Serial communications bus (RSBus), with less wiring than a conventional heating/cooling system, allows system communication
- Uses standard 4-wire unshielded thermostat wiring
- High Definition Color Display with Subbase and wallplate furnished for easy installation

NOTE - See the Lennox® S40 Thermostat Product Specifications bulletin in the Controls section for more information.

Remote Outdoor Temperature Sensor

- Allows thermostat to display outdoor temperature
- Automatically detected when connected to thermostat

NOTE - Sensor is required for the Enhanced Dehumidification Accessory (EDA).

NOTE - Sensor is furnished as standard with Lennox® Communicating outdoor units, optional for conventional units.

Thermostat

- Thermostat is not furnished with unit
- Lennox Price Book for selection

Transformer (75VA)

- Recommended when furnace is used with zoning or defrost thermostats and other 24V accessories requiring a higher VA rating
- Circuit breaker (furnished) is wired in series
- Replaces the standard 40VA transformer

FEATURES

CABINET

- Low-profile, narrow width allows easy installation
- Heavy-gauge, cold rolled steel construction
- Pre-painted finish
- Flanges provided on supply air opening for ease of plenum connection or alignment with indoor coil
- 10 Insulated with foil faced insulation on sides and back of heating compartment and mat faced insulation in blower compartment
- Sealed blower compartment
- Inner blower compartment access panel seals blower compartment from air leakage
- Cabinet door can be removed without any tools
- Complete service access
- 11 Safety interlock switch automatically shuts off power to unit when inner blower compartment access panel is removed
- 12 Gas piping and electrical inlets are provided in both sides of cabinet

Coil Match-Up

- All Lennox downflow indoor coils will physically match the furnace supply air opening with the same letter designation (A, B, C, D) as in the furnace model number

Low Leakage Cabinet

- All models have less than 2% air leakage
- Meets ANSI/ASHRAE Standard 193-2010 “Method of Test for Determining the Air Tightness of HVAC Equipment”

Optional Accessories

Downflow Combustible Flooring Base

- Required for heating only units installed on combustible flooring
- Not required in add-on cooling applications
- See Dimension drawing

FILTER (not furnished)

- Filter and provisions for external mounting must be field provided

Optional Accessories

Downflow Filter Cabinet

- Filter cabinet mounts directly on top of furnace
- “A” width cabinet includes one filter
- “B” and “C” width cabinets include two filters
- Filter rails are furnished
- Front access for servicing
- Cleanable filter(s) are furnished

REFRIGERATION DETECTION SYSTEM (RDS)

Optional Accessories

Refrigerant Detection System (RDS) Coil Sensor Kit

- Complies with UL 60335-2-40 approved standard
- Required for field installation for all systems using R-454B refrigerant if sensor is not furnished with coil
- Consists of Refrigerant Detection System (RDS) sensor, lineset sleeves, mounting brackets and A2L labeling
- Sensor ensures safe operation for systems equipped with R-454B refrigerant
- Sensor will detect anu R-454B refrigerant

Refrigerant Detection System (RDS) Blower Control Board

Communicating Blower Control Board (Universal)

- Communicating Blower Control Board and Sensor can be used universally with any Lennox® communicating furnace or any non-communicating 24 volt furnace

Non-Communicating Blower Control Board

- Non-Communicating Blower Control Board and Sensor can be used with any non-communicating 24 volt furnace

Standard Features

- Complies with UL 60335-2-40 approved standard
- Required for all systems using R-454B refrigerant
- Connects to the RDS sensor furnished with the RDS Coil Sensor Kit
- Supports up to two RDS Sensors (factory setting)
- Used as an interface between indoor unit and thermostat to control system
- Ensures safe operation for systems equipped with R-454B refrigerant
- If R-454B refrigerant is detected, the refrigerant detection system will stop compressor and/or heating operating and operate the blower to reduce concentrations in the conditioned space
- Once safe levels are reached the HVAC system will resume normal operation
- Multi-color LED for system status and as an aid in troubleshooting
  - Flashing LED codes for system status (Green/Blue) and diagnosing Sensor errors (Red)
- Alarm relay can trigger an external alarm if R-454B refrigerant is detected
- Zone relay opens all zone dampers (if part of a zoning system) if R-454B refrigerant is detected
- Power is disabled to non-communicating thermostats to prevent demand if R-454B refrigerant is detected
- On system start-up blower will run for five minutes and any thermostat demands are disabled
- Dimensions (H x W x D): 7-7/16 x 7-7/16 x 2-1/2 (189 x 189 x 127 mm)

NOTE - See Refrigerant Detection System (RDS) Components Table on page 10.

See the CK40 Indoor Coil Product Specifications bulletins for more information.

Refer to the Installation Instructions for additional information.

SPECIFICATIONS

		Model No.	SL280DF070V36A	SL280DF090V48B	SL280DF090V60C	SL280DF110V60C
Gas Heating Performance		[1] AFUE	80%	80%	80%	80%
	High Fire	Input - Btuh	66,000	88,000	88,000	110,000
		Output - Btuh	52,000	69,000	70,000	87,000
		Temperature rise range - °F	35-65	35-65	35-65	35-65
		Gas Manifold Pressure (in. w.g.) Nat. Gas / LPG/Propane	3.5 / 10.0	3.5 / 10.0	3.5 / 10.0	3.5 / 10.0
	Low Fire	Input - Btuh	43,000	57,000	57,000	72,000
		Output - Btuh	35,000	46,000	46,000	59,000
		Temperature rise range - °F	25-55	25-55	25-55	25-55
		Gas Manifold Pressure (in. w.g.) Nat. Gas / LPG/Propane	1.7 / 4.5	1.7 / 4.5	1.7 / 4.5	1.7 / 4.5
High static - in. w.g.		Heating	0.8	0.8	0.8	0.8
		Cooling	1.0	1.0	1.0	1.0
Connections in.		Flue connection - in. round	4	4	4	4
		Gas pipe size IPS	1/2	1/2	1/2	1/2
Indoor Blower		Wheel nominal diameter x width - in.	10 x 8	11 x 9	11 x 10	11 x 10
		Motor output - hp	1/2	1	1	1
		Tons of add-on cooling	2 - 3	3 - 4	3.5 - 5	3.5 - 5
		Air Volume Range - cfm	589 - 1514	830 - 1996	899 - 2273	882 - 2120
Electrical Data		Voltage	120 volts - 60 hertz - 1 phase			
		Blower motor full load amps	7.7	12.8	12.8	12.8
		Maximum overcurrent protection	15	20	20	20
Shipping Data		lbs. - 1 package	130	153	164	173

NOTE - Filters and provisions for mounting are not furnished and must be field provided.

[1] Annual Fuel Utilization Efficiency based on DOE test procedures and according to FTC labeling regulations. Isolated combustion system rating for non-weatherized furnaces.

OPTIONAL ACCESSORIES - ORDER SEPARATELY

NOTE - FURNACES CANNOT BE TWINNED!

	"A" Width Models	"B" Width Models	"C" Width Models
CABINET ACCESSORIES			
Downflow Combustible Flooring Base	**11M59**	**11M60**	**11M61**
CONTROLS			
S40 Smart Wi-Fi Thermostat	**22V24**	**22V24**	**22V24**
[2] Remote Outdoor Air Temperature Sensor	**X2658**	**X2658**	**X2658**
[1] Discharge Air Temperature Sensor	**88K38**	**88K38**	**88K38**
Transformer (75VA)	**27J32**	**27J32**	**27J32**
DOWNFLOW FILTER KITS			
[3] Downflow Filter Cabinet	**51W06**	**51W07**	**51W08**
No. and Size of filter - in.	(1) 20 x 20 x 1	(2) 16 x 20 x 1	(2) 16 x 20 x 1

[1] Remote Outdoor Air Temperature Sensor is used with conventional (non-Lennox® Communicating) outdoor units (sensor is furnished with Lennox® Communicating outdoor units). Allows the thermostat to display outdoor temperature. Required in dual-fuel and EDA applications.

[2] Optional for service diagnostics.

[3] Cleanable polyurethane, frame-type filter.

GAS HEAT ACCESSORIES

Input	High Altitude Pressure Switch Kit			Natural Gas to LPG/Propane Kit	LPG/Propane to Natural Gas Kit	Natural Gas High Altitude Orifice Kit	LPG/Propane High Altitude Orifice Kit
	0 - 4500 ft.	4501 - 7500 ft.	7501 - 10,000 ft.	0 - 7500 ft.	0 - 7500 ft.	7501- 10,000 ft.	7501- 10,000 ft.
070	No Change	No Change	73W36	11K51	77W09	73W37	11K46
090	No Change	No Change	73W36	11K51	77W09	73W37	11K46
110	No Change	No Change	73W35	11K51	77W09	73W37	11K46

REFRIGERANT DETECTION SYSTEM (RDS) COMPONENTS

Description		Order No.
Refrigerant Detection System (RDS) Coil Sensor Kit		26Z69
Refrigerant Detection System (RDS) Blower Control Board	Any Lennox® Communicating Furnace or any Non-Communicating 24V Furnace (Universal)	27A03
	Any Non-Communicating 24V Furnace	27A02

NOTE - Communicating Blower Control Board and Sensor can be used universally with Lennox® communicating furnace or any non-communicating 24 volt furnace. Non-Communicating Blower Control Board and Sensor can be used with any non-communicating 24 volt furnace.

HIGH ALTITUDE DERATE

NOTE - Units may be installed at altitudes up to 4500 ft. above sea level without any modifications. At altitudes above 4500 ft. units must be derated to match information in the shaded area shown below.

NOTE - This is the only permissible derate for these units.

Input	Gas Manifold Pressure (Outlet) in. w.g.											
	0 - 4500 Feet				4501 -7500 Feet				7501 - 10,000 ft.			
	Natural Gas		LPG/Propane		Natural Gas		LPG/Propane		[1] Natural Gas		LPG/Propane	
	High Fire	Low Fire	High Fire	Low Fire	High Fire	Low Fire	High Fire	Low Fire	High Fire	Low Fire	High Fire	Low Fire
070	3.5	1.7	10	4.5	3.4	1.6	10	4.5	3.5	1.7	10	4.5
090	3.5	1.7	10	4.5	3.0	1.5	10	4.5	3.5	1.7	10	4.5
110	3.5	1.7	10	4.5	3.2	1.5	10	4.5	3.5	1.7	10	4.5

[1] Natural Gas High Altitude Orifice Kit required.

INSTALLATION CLEARANCES

Vent Type	Type B1	Type C
Sides	0 inches (0 mm)	[1] 0 inches (0 mm)
Rear	0 inches (0 mm)	0 inches (0 mm)
Top	1 inch (25 mm)	1 inch (25 mm)
Front	2-1/4 inches (57 mm)	2-1/4 inches (57 mm)
Front (alcove)	24 inches (610 mm)	24 inches (610 mm)
Front (service)	24 inches (610 mm)	24 inches (610 mm)
Floor	[2] Combustible	[2] Combustible
Flue	1 inch (25 mm)	6 inches (152 mm)

NOTE - Air for combustion must conform to the methods outlined in the National Fuel Gas Code (NFPA 54/ANSI-Z223.1).

NOTE - In the U.S. flue sizing must conform to the methods outlined in the current National Fuel Gas Code (NFPA 54/ANSI-Z223.1) or applicable provisions of local building codes.

[1] Left side requires 4 in. clearance if single wall vent is used on 14-1/2 in. A" width cabinets, and 2 in. clearance on 17-1/2 in. B" width cabinets.

[2] Clearance for installation on combustible floor if optional Downflow Combustible Flooring Base is installed between furnace and combustible floor. Not required in add-on cooling applications if installed in accordance with local codes or National Fuel Gas Code ANSI-Z223.1.

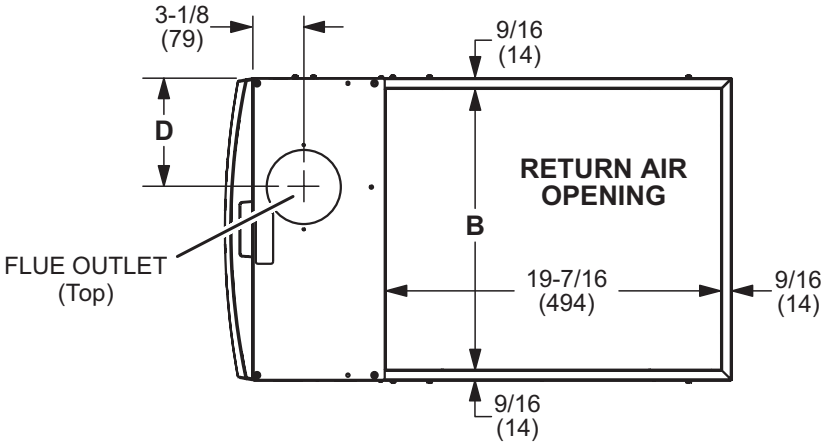

TOP VIEW

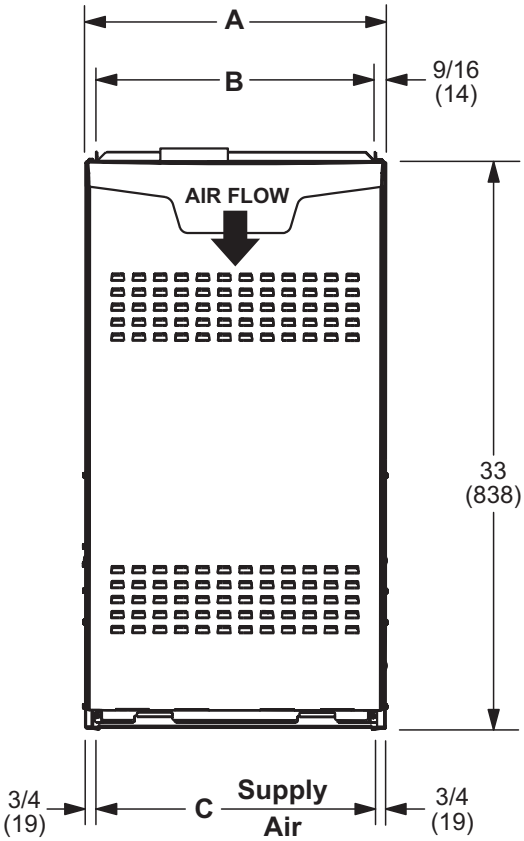

FRONT VIEW

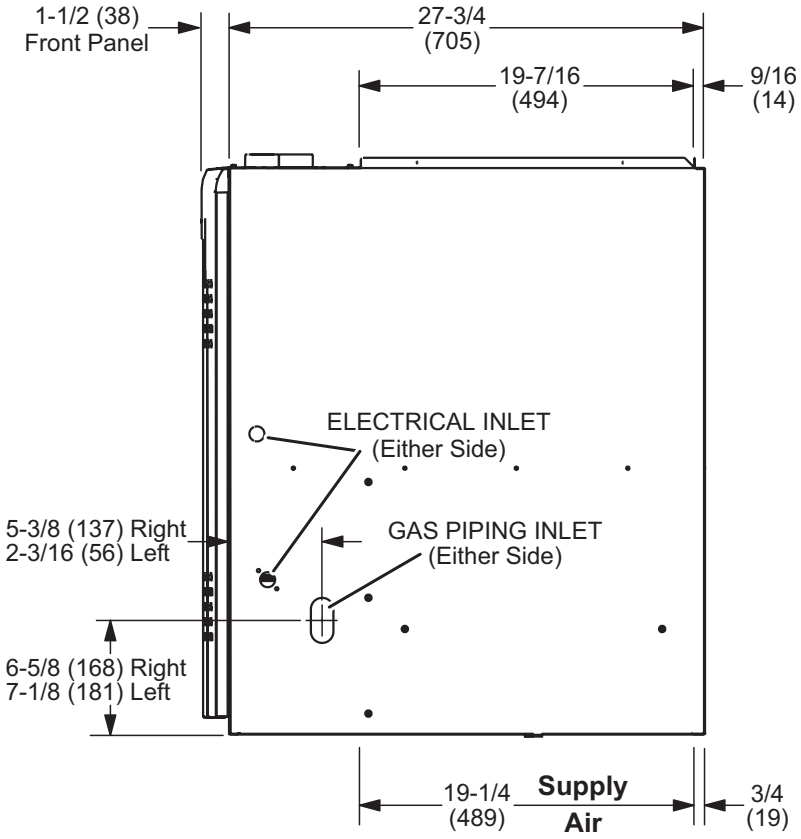

SIDE VIEW

Model No.	A		B		C		D	
	in.	mm	in.	mm	in.	mm	in.	mm
SL280DF070V36A	14-1/2	368	13-3/8	340	13	330	4-3/4	121
SL280DF090V48B	17-1/2	446	16-3/8	416	16	406	6-1/4	159
SL280DF090V60C SL280DF110V60C	21	533	19-7/8	504	19-1/2	495	8	203

DOWNFLOW FILTER CABINET

"A" WIDTH FURNACES
(Single Filter)

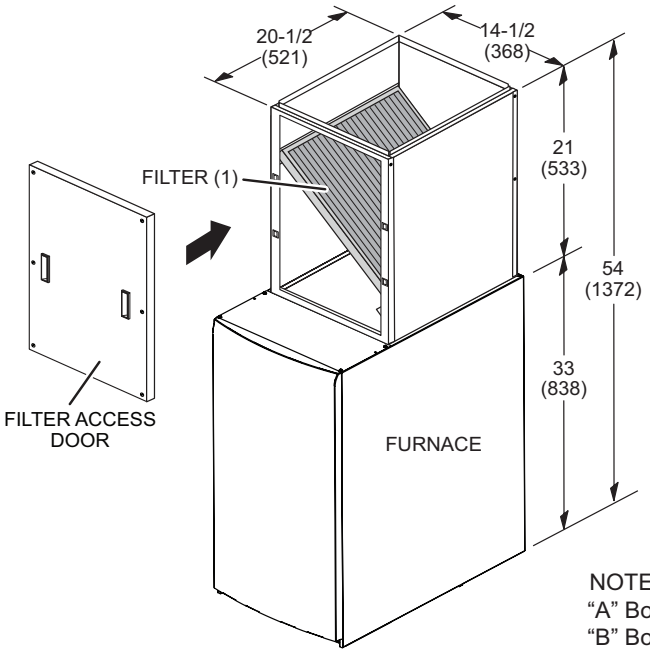

"B AND "C" WIDTH FURNACES
(Two Filters)

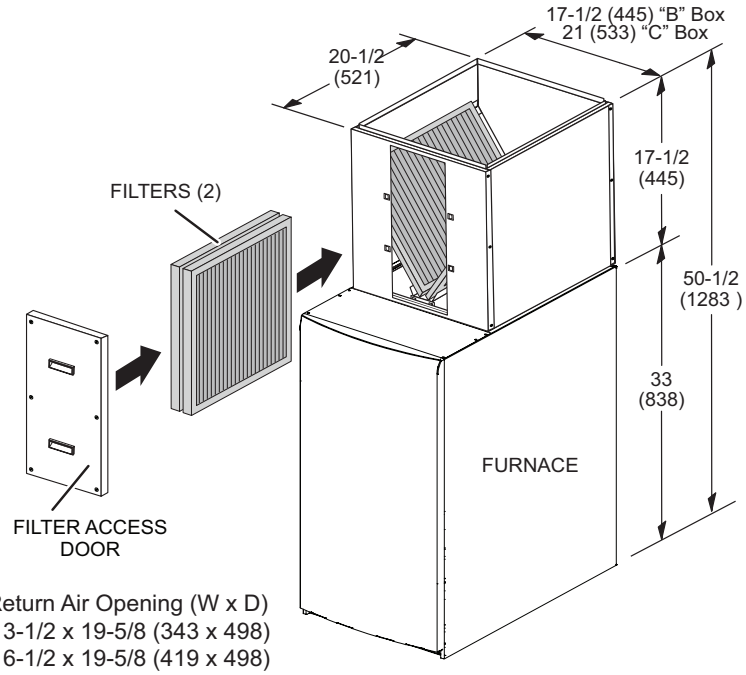

NOTE: Return Air Opening (W x D)
"A" Box 13-1/2 x 19-5/8 (343 x 498)
"B" Box 16-1/2 x 19-5/8 (419 x 498)
"C" Box 20 x 19-5/8 (508 x 498)

DOWNFLOW COMBUSTIBLE FLOORING BASE

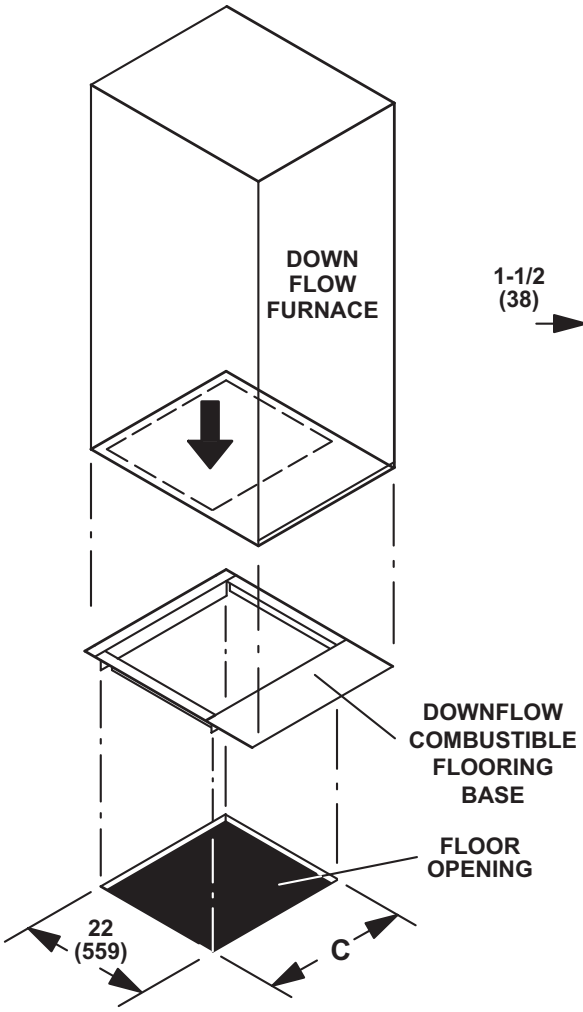

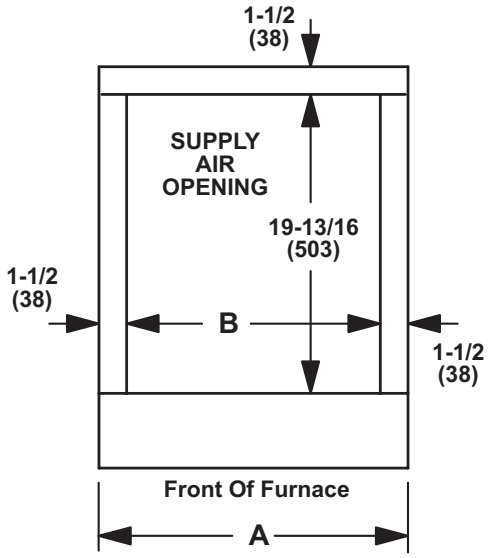

TOP VIEW

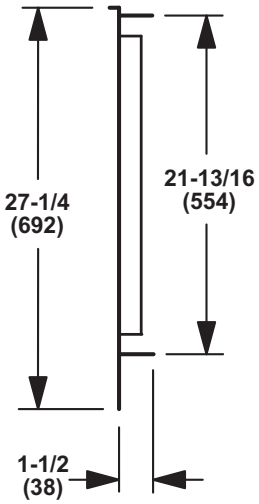

SIDE VIEW

Cabinet Width	Catalog Number	A		B		C	
		in.	mm	in.	mm	in.	mm
A	**11M59**	16-9/16	421	13-9/16	344	15-3/4	400
B	**11M60**	19-9/16	497	16-9/16	421	18-3/4	476
C	**11M61**	23-1/16	586	20-1/16	510	22-1/4	565

Model		Coil/Furnace Width		Coil Height		Overall Height	
CK40DT	**CRX35**	in.	mm	in.	mm	in.	mm
CK40DT-24A	CRX35-24A	14-1/2	368	18	457	51	1295
CK40DT-24B	CRX35-24B	17-1/2	445	18	457	51	1295
CK40DT-30/36B	CRX35-30/36B	17-1/2	445	23-1/2	597	56-1/2	1435
CK40DT-30/36C	CRX35-30/36C	21	533	23-1/2	597	56-1/2	1435
CK40DT-42B	CRX35-42B	17-1/2	445	23-1/2	597	56-1/2	1435
CK40DT-48C	CRX35-48C	21	533	27-1/2	699	60-1/2	1537
CK40CT-50/60C	CRX35-50/60C	21	533	27-1/2	699	60-1/2	1537

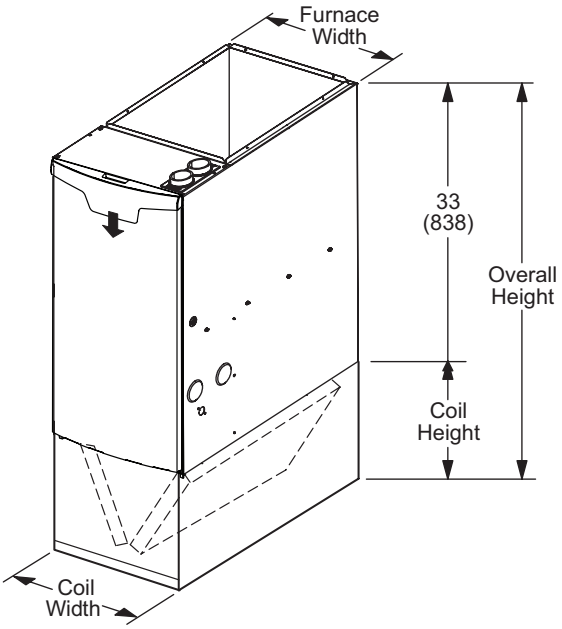

BLOWER DATA

SL280DF070V36A BLOWER PERFORMANCE (less filter)

0 through 0.8 in. w.g. (Heating) and 0 through 1.0 in. w.g. (Cooling) External Static Pressure Range

HEATING		
[1] Heating Speed DIP Switch Settings	First Stage Heating Speed - cfm	Second Stage Heating Speed - cfm
+24%	1065	1170
+18%	1010	1115
+12%	960	1055
+6%	910	1000
Factory Default	860	945
–6%	805	885
–12%	755	830
–18%	705	775

COOLING								
[1] Cooling Speed DIP Switch Settings	First Stage Cooling Speed - cfm				Second Stage Cooling Speed - cfm			
	Low	Medium-Low	Medium-High	[2] High	Low	Medium-Low	Medium-High	[2] High
+	667	756	872	1010	1015	1101	1241	1427
Factory Default	618	683	778	924	922	1014	1115	1304
–	537	619	691	811	800	900	1024	1169

[1] Cooling and heating speeds are based on a combination of DIP switch settings on the furnace control. Refer to Installation Instructions for specific DIP Switch Settings.

[2] Factory default setting.

NOTES - The effect of static pressure is included in air volumes shown.
First stage HEAT is approximately 91% of the same second stage HEAT.
First stage COOL (two-stage air conditioning units only) is approximately 70% of the same second stage COOL speed position.
Continuous Fan Only speed is selectable at 28% and 38% of the selected second stage cooling speed - minimum 250 cfm.
Lennox® Smart Zoning System Applications - Minimum blower speed is 250 cfm.

SL280DF070V36A BLOWER MOTOR WATTS (COOLING)

[1] Cooling Speed DIP Switch Settings		Motor Watts @ Various External Static Pressures - in. wg.																			
		First Stage									Second Stage										
		0	0.1	0.2	0.3	0.4	0.5	0.6	0.7	0.8	0	0.1	0.2	0.3	0.4	0.5	0.6	0.7	0.8	0.9	1.0
+ Setting																					
Cooling Speed	Low	44	62	74	90	103	119	133	148	166	119	144	166	189	212	231	242	267	278	298	323
	Med-Low	46	63	83	96	115	128	144	170	181	138	162	177	212	229	247	270	288	320	342	363
	Med-High	66	81	104	127	144	160	175	195	219	185	210	238	266	293	317	349	374	399	432	448
	High	100	123	138	167	191	211	234	255	271	299	328	354	380	412	434	477	499	528	557	570
Factory Default																					
Cooling Speed	Low	34	53	65	78	90	105	118	129	144	89	111	134	153	178	194	208	229	247	263	273
	Med-Low	38	57	64	85	98	107	133	147	158	104	125	144	166	192	212	230	261	267	295	315
	Med-High	49	72	87	96	122	135	160	176	197	141	167	184	216	237	256	288	304	326	356	383
	High	70	90	109	132	158	172	201	222	231	218	245	276	306	323	357	374	403	444	472	489
– Setting																					
Cooling Speed	Low	31	44	56	67	80	92	100	112	121	69	86	105	124	140	154	176	196	209	220	242
	Med-Low	33	45	60	73	89	104	114	123	144	73	89	111	124	155	175	196	210	224	243	263
	Med-High	40	54	74	86	106	115	134	142	170	108	118	153	170	196	219	227	253	266	286	316
	High	52	74	85	107	128	149	161	181	201	156	181	208	222	253	284	305	333	356	374	398

BLOWER DATA

SL280DF090V48B BLOWER PERFORMANCE (less filter)

0 through 0.8 in. w.g. (Heating) and 0 through 1.0 in. w.g. (Cooling) External Static Pressure Range

HEATING		
[1] Heating Speed DIP Switch Settings	First Stage Heating Speed - cfm	Second Stage Heating Speed - cfm
+24%	1360	1500
+18%	1285	1415
+12%	1220	1350
+6%	1135	1285
Factory Default	1075	1200
–6%	1030	1110
–12%	960	1050
–18%	890	975

COOLING								
[1] Cooling Speed DIP Switch Settings	First Stage Cooling Speed - cfm				Second Stage Cooling Speed - cfm			
	Low	Medium-Low	Medium-High	[2] High	Low	Medium-Low	Medium-High	[2] High
+	740	905	1040	1220	1085	1330	1545	1730
Factory Default	690	820	950	1110	990	1200	1400	1,595
–	610	745	855	1005	895	1075	1270	1460

[1] Cooling and heating speeds are based on a combination of DIP switch settings on the furnace control. Refer to Installation Instructions for specific DIP Switch Settings.

[2] Factory default setting.

NOTES - The effect of static pressure is included in air volumes shown.
First stage HEAT is approximately 91% of the same second stage HEAT.
First stage COOL (two-stage air conditioning units only) is approximately 70% of the same second stage COOL speed position.
Continuous Fan Only speed is selectable at 28% and 38% of the selected second stage cooling speed - minimum 380 cfm.
Lennox® Smart Zoning System Applications - Minimum blower speed is 380 cfm.

SL280DF090V48B BLOWER MOTOR WATTS (COOLING)

[1] Cooling Speed DIP Switch Settings		Motor Watts @ Various External Static Pressures - in. wg.																			
		First Stage									Second Stage										
		0	0.1	0.2	0.3	0.4	0.5	0.6	0.7	0.8	0	0.1	0.2	0.3	0.4	0.5	0.6	0.7	0.8	0.9	1.0
+ Setting																					
Cooling Speed	Low	33	59	77	98	122	142	166	192	214	97	129	150	188	217	247	267	302	323	365	394
	Med-Low	64	91	118	139	167	193	215	246	272	156	188	230	269	313	346	377	429	452	491	529
	Med-High	92	119	150	174	209	240	261	292	319	281	304	361	413	455	473	528	552	607	637	673
	High	136	174	200	236	264	305	342	376	399	442	470	538	566	603	636	691	730	775	814	838
Factory Default																					
Cooling Speed	Low	23	50	63	84	104	124	150	168	194	74	103	126	155	183	210	243	264	290	316	349
	Med-Low	45	74	98	114	140	163	192	216	247	120	155	192	223	246	276	314	352	382	412	458
	Med-High	62	93	122	143	173	195	232	260	290	206	236	285	324	369	401	437	483	514	551	590
	High	112	142	168	202	220	253	282	306	346	323	336	400	445	489	523	558	595	643	660	689
– Setting																					
Cooling Speed	Low	17	38	56	72	88	115	132	150	170	51	78	106	129	155	178	207	229	259	289	311
	Med-Low	31	54	76	97	117	142	165	187	209	92	122	147	178	217	244	264	289	322	361	385
	Med-High	51	76	104	125	153	175	202	222	258	135	177	208	233	272	311	349	386	417	452	491
	High	78	107	137	155	184	215	246	268	301	247	282	313	365	398	445	483	521	558	582	620

BLOWER DATA

SL280DF090V60C BLOWER PERFORMANCE (less filter)

0 through 0.8 in. w.g. (Heating) and 0 through 1.0 in. w.g. (Cooling) External Static Pressure Range

HEATING		
[1] Heating Speed DIP Switch Settings	First Stage Heating Speed - cfm	Second Stage Heating Speed - cfm
+24%	1540	1695
+18%	1465	1615
+12%	1390	1530
+6%	1320	1450
Factory Default	1245	1365
–6%	1170	1285
–12%	1095	1205
–18%	1020	1120

COOLING								
[1] Cooling Speed DIP Switch Settings	First Stage Cooling Speed - cfm				Second Stage Cooling Speed - cfm			
	Low	Medium-Low	Medium-High	[2] High	Low	Medium-Low	Medium-High	[2] High
+	1125	1250	1400	1590	1585	1770	2000	2275
Factory Default	1020	1135	1285	1445	1420	1610	1845	2,050
–	900	1005	1155	1280	1305	1395	1645	1875

[1] Cooling and heating speeds are based on a combination of DIP switch settings on the furnace control. Refer to Installation Instructions for specific DIP Switch Settings.

[2] Factory default setting.

NOTES - The effect of static pressure is included in air volumes shown.
First stage HEAT is approximately 91% of the same second stage HEAT.
First stage COOL (two-stage air conditioning units only) is approximately 70% of the same second stage COOL speed position.
Continuous Fan Only speed is selectable at 28% and 38% of the selected second stage cooling speed - minimum 450 cfm.
Lennox® Smart Zoning System Applications - Minimum blower speed is 450 cfm.

SL280DF090V60C BLOWER MOTOR WATTS (COOLING)

[1] Cooling Speed DIP Switch Settings		Motor Watts @ Various External Static Pressures - in. wg.																			
		First Stage									Second Stage										
		0	0.1	0.2	0.3	0.4	0.5	0.6	0.7	0.8	0	0.1	0.2	0.3	0.4	0.5	0.6	0.7	0.8	0.9	1.0
+ Setting																					
Cooling Speed	Low	81	109	135	154	190	215	243	269	291	197	229	269	314	351	403	424	465	503	542	572
	Med-Low	117	142	175	204	227	252	285	308	340	299	329	388	432	466	495	549	586	645	669	705
	Med-High	143	183	208	247	283	312	352	385	423	451	501	521	587	633	664	705	765	794	848	879
	High	209	246	291	329	370	402	447	490	525	689	720	783	826	890	938	995	1032	1072	1104	1131
Factory Default																					
Cooling Speed	Low	63	92	114	139	162	186	216	242	270	144	183	217	248	286	307	354	386	421	459	498
	Med-Low	82	111	141	159	195	223	247	274	308	211	245	294	331	369	401	445	486	523	559	604
	Med-High	121	148	181	211	241	279	304	331	356	331	366	411	468	497	546	588	629	664	707	748
	High	155	194	216	260	296	334	363	393	434	481	535	574	604	655	714	762	816	851	877	942
– Setting																					
Cooling Speed	Low	53	76	101	121	139	166	184	209	238	117	149	180	203	235	269	294	327	349	387	421
	Med-Low	68	94	120	137	166	193	219	239	266	154	187	219	258	291	319	365	386	424	458	492
	Med-High	88	117	144	169	204	227	251	282	313	225	254	298	355	382	427	459	503	542	580	604
	High	124	156	183	208	239	267	304	326	359	362	395	436	484	520	568	614	643	686	721	746

BLOWER DATA

SL280DF110V60C BLOWER PERFORMANCE (less filter)

0 through 0.8 in. w.g. (Heating) and 0 through 1.0 in. w.g. (Cooling) External Static Pressure Range

HEATING		
[1] Heating Speed DIP Switch Settings	First Stage Heating Speed - cfm	Second Stage Heating Speed - cfm
+24%	1645	1810
+18%	1565	1720
+12%	1485	1635
+6%	1405	1545
Factory Default	1325	1460
–6%	1245	1370
–12%	1170	1285
–18%	1090	1195

COOLING								
[1] Cooling Speed DIP Switch Settings	First Stage Cooling Speed - cfm				Second Stage Cooling Speed - cfm			
	Low	Medium-Low	Medium-High	[2] High	Low	Medium-Low	Medium-High	[2] High
+	1055	1230	1365	1525	1500	1755	1915	2120
Factory Default	975	1115	1250	1400	1360	1585	1770	1960
–	895	1005	1130	1245	1225	1405	1595	1760

[1] Cooling and heating speeds are based on a combination of DIP switch settings on the furnace control. Refer to Installation Instructions for specific DIP Switch Settings.

[2] Factory default setting.

NOTES - The effect of static pressure is included in air volumes shown.
First stage HEAT is approximately 91% of the same second stage HEAT.
First stage COOL (two-stage air conditioning units only) is approximately 70% of the same second stage COOL speed position.
Continuous Fan Only speed is selectable at 28% and 38% of the selected second stage cooling speed - minimum 450 cfm.
Lennox® Smart Zoning System Applications - Minimum blower speed is 450 cfm.

SL280DF110V60C BLOWER MOTOR WATTS (COOLING)

[1] Cooling Speed DIP Switch Settings		Motor Watts @ Various External Static Pressures - in. wg.																			
		First Stage									Second Stage										
		0	0.1	0.2	0.3	0.4	0.5	0.6	0.7	0.8	0	0.1	0.2	0.3	0.4	0.5	0.6	0.7	0.8	0.9	1.0
+ Setting																					
Cooling Speed	Low	78	101	128	144	172	200	218	244	264	172	196	243	284	321	360	391	428	452	494	528
	Med-Low	108	135	162	192	213	241	269	295	324	268	294	352	376	424	466	505	554	581	604	645
	Med-High	146	180	203	238	271	305	334	358	396	373	424	459	504	529	575	641	680	712	747	810
	High	181	219	254	291	327	365	401	436	479	510	557	596	660	725	763	815	869	922	962	993
Factory Default																					
Cooling Speed	Low	62	87	108	125	148	173	196	222	239	135	165	194	231	267	305	320	346	381	422	457
	Med-Low	87	115	135	158	189	218	236	264	285	195	226	270	311	347	377	421	455	494	530	562
	Med-High	114	140	173	201	224	250	283	312	339	290	335	358	401	450	497	528	565	611	640	677
	High	148	186	207	246	282	307	354	375	410	395	438	484	525	559	608	659	711	745	776	826
– Setting																					
Cooling Speed	Low	47	67	94	108	128	140	172	193	212	106	134	161	191	214	238	259	295	322	349	379
	Med-Low	67	91	114	134	151	180	206	226	247	147	181	210	245	280	312	347	376	404	445	476
	Med-High	94	116	141	167	198	210	242	259	288	207	236	284	320	356	391	421	473	494	535	573
	High	118	146	176	202	222	248	285	313	337	280	315	356	398	444	478	520	559	607	627	669

REVISIONS

Sections	Description of Change
Dimensions	Updated Furnace/Coil Combined Dimension data for new CK40 coils.
Override Accessories	Added Refrigerant Detection System (RDS) Components.

Visit us at www.lennox.com
For the latest technical information, www.LennoxPros.com
Contact us at 1-800-4-LENNOX

NOTE - Due to Lennox' ongoing commitment to quality, Specifications, Ratings and Dimensions subject to change without notice and without incurring liability.
Improper installation, adjustment, alteration, service or maintenance can cause property damage or personal injury.
Installation and service must be performed by a qualified installer and servicing agency.

©2024 Lennox Industries, Inc.