© 2025 Lennox Industries Inc.
Dallas, Texas USA

INSTALLATION INSTRUCTIONS EL297UHVK

ELITE® SERIES GAS FURNACE
UP/FLOW HORIZONTAL AIR DISCHARGE

508581-01
01/2025

THIS MANUAL MUST BE LEFT WITH THE HOMEOWNER FOR FUTURE REFERENCE

⚠ This is a safety alert symbol and should never be ignored. When you see this symbol on labels or in manuals, be alert to the potential for personal injury or death.

⚠ WARNING

Improper installation, adjustment, alteration, service or maintenance can cause property damage, personal injury or loss of life. Installation and service must be performed by a licensed professional HVAC installer or equivalent, service agency, or the gas supplier.

⚠ WARNING

This furnace is equipped with an ignition control factory enabled for use with Lennox A2L refrigerant systems. Disabling the refrigerant detection functionality on A2L system is prohibited by safety codes. Refer to furnace installation instructions for non-A2L and non-Lennox refrigerant system setup.

⚠ CAUTION

As with any mechanical equipment, personal injury can result from contact with sharp sheet metal edges. Be careful when you handle this equipment.

⚠ NOTICE

A thermostat is not included and must be ordered separately.

A communicating thermostat must be used in communicating applications.

In non-communicating applications, the Lennox ComfortSense® 7500 thermostat may be used, as well as other non-communicating thermostats.

In all cases, setup is critical to ensure proper system operation.

Field wiring for both communicating and non-communicating applications is illustrated in diagrams, which begin on Page 41.

Table of Contents

Unit Dimensions - inches (mm) 2
Shipping and Packing List 3
Safety Information 3
Use of Furnace as Construction Heater 4
General 5
Shipping Bolt Removal 8
Installation - Setting Equipment 8
Filters 13
Duct System 13
Pipe & Fittings Specifications 14
Joint Cementing Procedure 15
Venting Practices 16
Gas Piping 36
Electrical 39
Ignition Control 50
Blower Data 55
Low GWP Application 61
Unit Start Up 64
Gas Pressure Adjustment 65
Proper Combustion 66
High Altitude 66
Combustion Air for Non-Direct Vent Applications 67
Repair Parts 67
Other Unit Adjustments 68
Heating Sequence of Operation 68
Service 70
Program Unit Capacity/Size Mode 72
Requirements for Commonwealth of Massachusetts 73
Start-Up and Performace Checklist 76

0125
508581-01

Unit Dimensions - inches (mm)

[1] NOTE - 60C and 60D size units that require air volumes over 1800 cfm must have one of the following:
1. Single side return air and Optional Return Air Base with transition that must accommodate required 20 x 25 x 1 inch (508 x 635 x 25 mm) air filter to maintain proper velocity.
2. Bottom return air.
3. Return air from both sides.
4. Bottom and one side return air.

See Blower Performance Tables for additional information.

[2] Optional Side Return Air Filter Kit is not for use with the Optional Return Air Base.

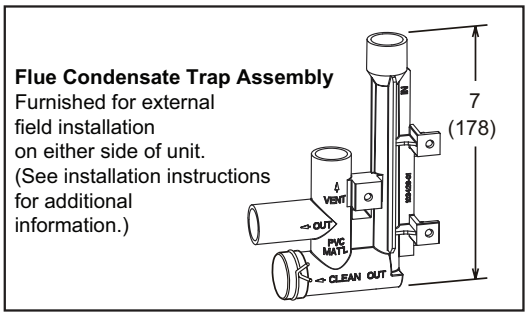

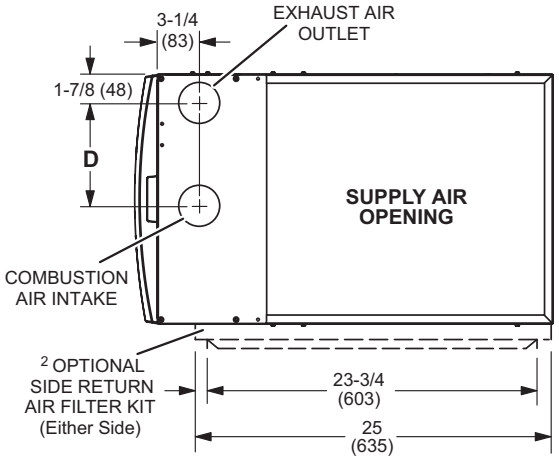

TOP VIEW

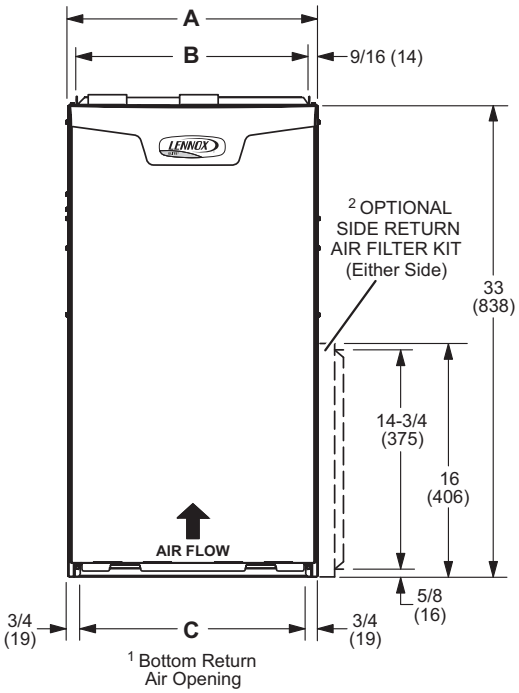

FRONT VIEW

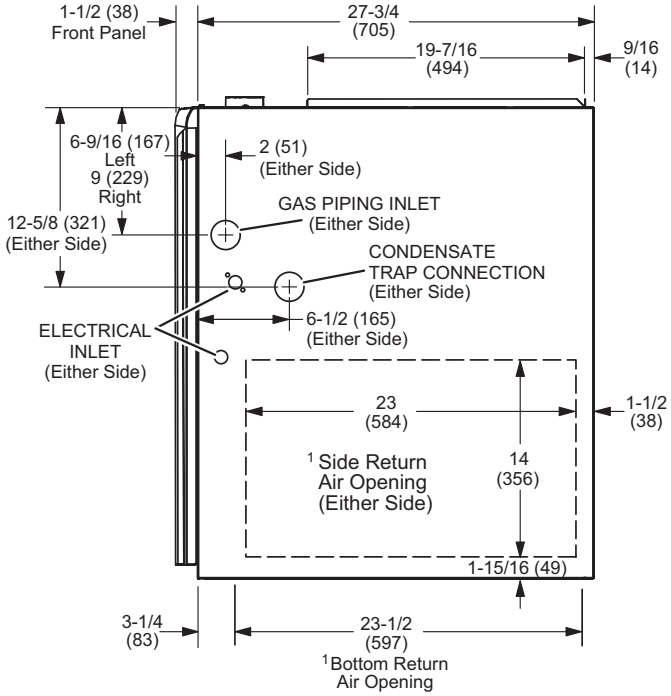

SIDE VIEW

Model	A	B	C	D
EL297UH045XV36BK EL297UH070XV36BK	17−1/2 in 446 mm	16−3/8 in 416 mm	16 in 406 mm	7−5/8 in 194 mm
EL297UH090XV36CK EL297UH090XV48CK EL297UH090XV60CK EL297UH110XV48CK EL297UH110XV60CK	21 in 533 mm	19−7/8 in 505 mm	19−1/2 in 495 mm	9−3/8 in 238 mm
EL297UH135XV60DK	24−1/2 in 622 mm	23−3/8 in 594 mm	23 in 584 mm	11−1/8 in 283 mm

EL297UHVK Gas Furnace

The EL297UHVK Category IV gas furnace is shipped ready for installation in the upflow or horizontal position. The furnace is shipped with the bottom panel in place. The bottom panel must be removed if the unit is to be installed in horizontal or upflow applications with bottom return air.

The EL297UHVK can be installed as either a Direct Vent or a Non-Direct Vent gas central furnace.

The furnace is equipped for installation in natural gas applications. A conversion kit (ordered separately) is required for use in propane/LP gas applications.

NOTE - *In Direct Vent installations, combustion air is taken from outdoors and flue gases are discharged outdoors. In Non-Direct Vent installations, combustion air is taken from indoors or ventilated attic or crawlspace and flue gases are discharged outdoors. See for applications involving roof termination.*

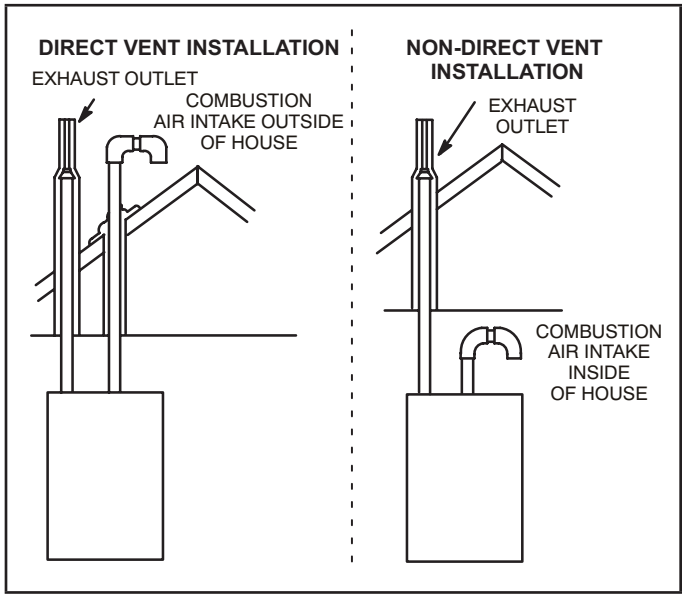

Figure 1

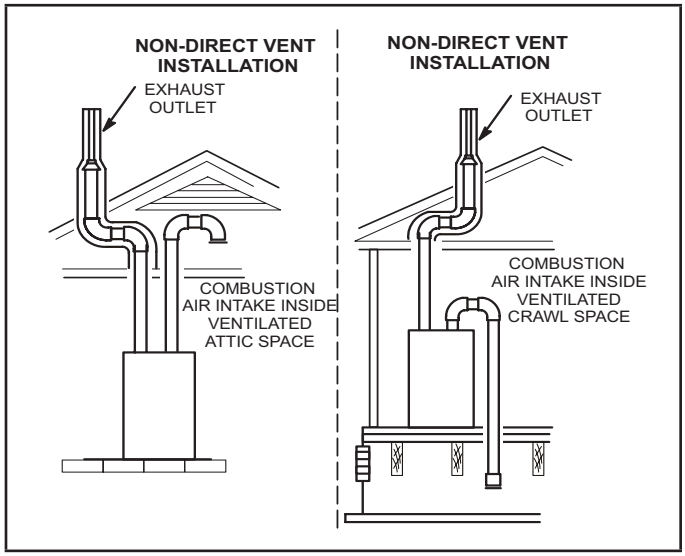

Figure 2

Shipping and Packing List

Package 1 of 1 contains

1 - Assembled EL297UHVK unit
1 - Bag assembly containing the following:
- 1 - Snap bushing
- 1 - Snap plug
- 1 - Wire tie
- 1 - Condensate trap
- 1 - Condensate trap cap
- 1 - Condensate trap clamp
- 1 - 2” diameter debris screen
- 1 - 3/4” Threaded street elbow

Check equipment for shipping damage. If you find any damage, immediately contact the last carrier.

The following items may also be ordered separately:

1 - Thermostat
1 - LP/Propane changeover kit
1 - Return air base kit
1 - Horizontal suspension kit
1 - High altitude pressure switch
1 - Sensor Kit (field installed)

Safety Information

⚠ CAUTION

As with any mechanical equipment, contact with sharp sheet metal edges can result in personal injury. Take care while handling this equipment and wear gloves and protective clothing.

⚠ DANGER

Danger of explosion.

There are circumstances in which odorant used with LP/propane gas can lose its scent. In case of a leak, LP/propane gas will settle close to the floor and may be difficult to smell. An LP/propane leak detector should be installed in all LP applications.

Use only the type of gas approved for use with this furnace. Refer to unit nameplate.

EL297UHVK units are CSA International certified to ANSI Z21.47 and CSA 2.3 standards.

Building Codes

In the USA, installation of gas furnaces must conform with local building codes. In the absence of local codes, units must be installed according to the current National Fuel Gas Code (ANSI-Z223.1/NFPA 54). The National Fuel Gas Code is available from the following address:

American National Standards Institute, Inc.

11 West 42nd Street

New York, NY 10036

In Canada, installation must conform with current National Standard of Canada CSA-B149 Natural Gas and Propane Installation Codes, local plumbing or waste water codes and other applicable local codes.

In order to ensure proper unit operation in non-direct vent applications, combustion and ventilation air supply must be provided according to the current National Fuel Gas Code or CSA-B149 standard.

Installation Locations

This furnace is CSA International certified for installation clearances to combustible material as listed on the unit nameplate and in the table in Figure 12. Accessibility and service clearances must take precedence over fire protection clearances.

NOTE - *For installation on combustible floors, the furnace shall not be installed directly on carpeting, tile, or other combustible material other than wood flooring.*

For installation in a residential garage, the furnace must be installed so that the burner(s) and the ignition source are located no less than 18 inches (457 mm) above the floor. The furnace must be located or protected to avoid physical damage by vehicles. When a furnace is installed in a public garage, hangar, or other building that has a hazardous atmosphere, the furnace must be installed according to recommended good practice requirements and current National Fuel Gas Code or CSA B149 standards.

NOTE - *Furnace must be adjusted to obtain a temperature rise within the range specified on the unit nameplate. Failure to do so may cause erratic limit operation and premature heat exchanger failure.*

This EL297UHVK furnace must be installed so that its electrical components are protected from water. Installed in Combination with a Cooling Coil When this furnace is used with cooling coils (Figure 3), it shall be installed in parallel with, or on the upstream side of, cooling coils to avoid condensation in the heating compartment. With a parallel flow arrangement, a damper (or other means to control the flow of air) must adequately prevent chilled ai

from entering the furnace. If the damper is manually operated, it must be equipped to prevent operation of either the heating or the cooling unit, unless it is in the full **HEAT** or **COOL** setting.

When installed, this furnace must be electrically grounded according to local codes. In addition, in the United States, installation must conform with the current National Electric Code, ANSI/NFPA No. 70. The National Electric Code (ANSI/NFPA No. 70) is available from the following address:

National Fire Protection Association

1 Battery March Park

Quincy, MA 02269

In Canada, all electrical wiring and grounding for the unit must be installed according to the current regulations of the Canadian Electrical Code Part I (CSA Standard C22.1) and/or local codes.

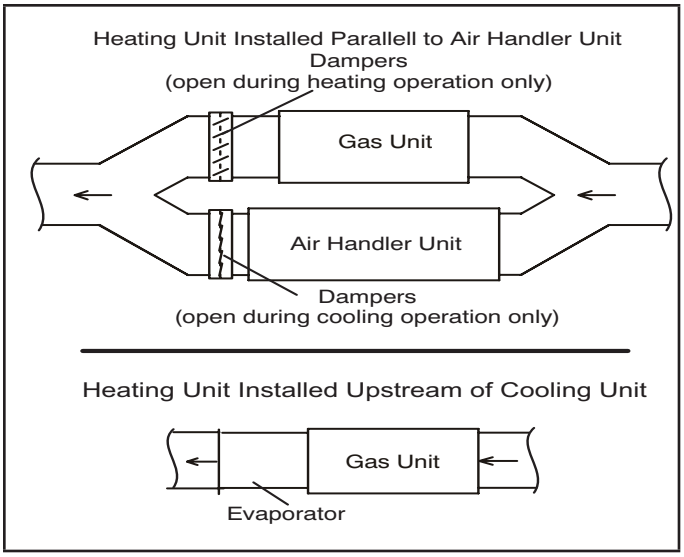

Figure 3

NOTE - This furnace is designed for a minimum continuous return air temperature of 60°F (16°C) or an intermittent operation down to 55°F (13°C) dry bulb for cases where a night setback thermostat is used. Return air temperature must not exceed 85°F (29°C) dry bulb.

The EL297UHVK furnace may be installed in alcoves, closets, attics, basements, garages, crawl spaces and utility rooms in the upflow or horizontal position. This furnace design has not been CSA certified for installation in mobile homes, recreational vehicles, or outdoors.

Use of Furnace as Construction Heater

Units may be used for heating of buildings or structures under construction, if the following conditions are met to ensure proper operation:

DO NOT USE THE UNIT FOR CONSTRUCTION HEAT UNLESS ALL OF THE FOLLOWING CRITERIA ARE MET:

- Furnace must be in its final location. The vent system must be permanently installed per these installation instructions.
- Furnace must be installed as a two pipe system and one hundred percent (100%) outdoor air must be provided for combustion air requirements during construction.
- A room thermostat must control the furnace. The use of fixed jumpers that will provide continuous heating is prohibited.
- The input rate and temperature rise must be set per the furnace rating plate.
- Supply and Return air ducts must be provided and sealed to the furnace. Return air must be terminated outside of the space where furnace is installed.
- Return air temperature range between 60°F (16°C) and 80°F (27°C) must be maintained.
- MERV 11 or greater air filters must be installed in the system and must be regularly inspected and maintained (e.g., regular static checks and replaced at end of life) during construction.

- Blower and vestibule access panels must be in place on the furnace at all times.
- The furnace heat exchanger, components, duct system, and evaporator coils must be thoroughly cleaned following final construction clean−up.
- Air filters must be replaced upon construction completion.
- All furnace operating conditions (including ignition, input rate, temperature rise and venting) must be verified in accordance with these installation instructions.

EQUIPMENT MAY EXPERIENCE PREMATURE COMPONENT FAILURE AS A RESULT OF FAILURE TO FOLLOW THE ABOVE INSTALLATION INSTRUCTIONS. FAILURE TO FOLLOW THE ABOVE INSTALLATION INSTRUCTIONS VOIDS THE MANUFACTURER'S EQUIPMENT LIMITED WARRANTY. LENNOX DISCLAIMS ALL LIABILITY IN CONNECTION WITH INSTALLER'S FAILURE TO FOLLOW THE ABOVE INSTALLATION INSTRUCTIONS.

NOTWITHSTANDING THE FOREGOING, INSTALLER IS RESPONSIBLE FOR CONFIRMING THAT THE USE OF CONSTRUCTION HEAT IS CONSISTENT WITH THE POLICIES AND CODES OF ALL REGULATING ENTITIES. ALL SUCH POLICIES AND CODES MUST BE ADHERED TO.

General

These instructions are intended as a general guide and do not supersede local codes in any way. Consult authorities having jurisdiction before installation.

In addition to the requirements outlined previously, the following general recommendations must be considered when installing a EL297UHVK furnace:

- Place the furnace as close to the center of the air distribution system as possible. The furnace should also be located close to the vent termination point.
- When the furnace is installed in non-direct vent applications, do not install the furnace where drafts might blow directly into it. This could cause improper combustion and unsafe operation.
- When the furnace is installed in non-direct vent applications, do not block the furnace combustion air opening with clothing, boxes, doors, etc. Air is needed for proper combustion and safe unit operation.
- When the furnace is installed in an attic or other insulated space, keep insulation away from the furnace.
- When the furnace is installed in an unconditioned space, consider provisions required to prevent freezing of condensate drain system.
- Please consult the manufacturer of your evaporator coil for their recommendations on distance required between the heat exchanger and their drain pan. Adequate space must be provided between the drain pan and the furnace heat exchange.

⚠ CAUTION

EL297UHVK unit should not be installed in areas normally subject to freezing temperatures.

⚠ WARNING

Insufficient combustion air can cause headaches, nausea, dizziness or asphyxiation. It will also cause excess water in the heat exchanger resulting in rusting and premature heat exchanger failure. Excessive exposure to contaminated combustion air will result in safety and performance related problems. Avoid exposure to the following substances in the combustion air supply:

Permanent wave solutions
Chlorinated waxes and cleaners
Chlorine base swimming pool chemicals
Water softening chemicals
De-icing salts or chemicals
Carbon tetrachloride
Halogen type refrigerants
Cleaning solvents (such as perchloroethylene)
Printing inks, paint removers, varnishes, etc.
Hydrochloric acid
Cements and glues
Antistatic fabric softeners for clothes dryers
Masonry acid washing materials

Combustion, Dilution & Ventilation Air

If the EL297UHVK is installed as a Non-Direct Vent Furnace, follow the guidelines in this section.

NOTE - *In Non-Direct Vent installations, combustion air is taken from indoors or ventilated attic or crawlspace and flue gases are discharged out-doors.*

In the past, there was no problem in bringing in sufficient outdoor air for combustion. Infiltration provided all the air that was needed. In today's homes, tight construction practices make it necessary to bring in air from outside for combustion. Take into account that exhaust fans, appliance vents, chimneys, and fireplaces force additional air that could be used for combustion out of the house.

Unless outside air is brought into the house for combustion, negative pressure (outside pressure is greater than inside pressure) will build to the point that a downdraft can occur in the furnace vent pipe or chimney. As a result, combustion gases enter the living space creating a potentially dangerous situation.

In the absence of local codes concerning air for combustion and ventilation, use the guidelines and procedures in this section to install EL297UHVK furnaces to ensure efficient and safe operation. You must consider combustion air needs and requirements for exhaust vents and gas piping. A portion of this information has been reprinted with permission from the National Fuel Gas Code (ANSI. Z223.1/NFPA 54). This reprinted material is not the complete and official position of the ANSI on the referenced subject, which is represented only by the standard in its entirety.

In Canada, refer to the CSA B149 installation codes.

⚠ CAUTION

Do not install the furnace in a corrosive or contaminated atmosphere. Meet all combustion and ventilation air requirements, as well as all local codes.

All gas-fired appliances require air for the combustion process. If sufficient combustion air is not available, the furnace or other appliance will operate inefficiently and unsafely. Enough air must be provided to meet the needs of all fuel-burning appliances and appliances such as exhaust fans which force air out of the house. When fireplaces, exhaust fans, or clothes dryers are used at the same time as the furnace, much more air is required to ensure proper combustion and to prevent a downdraft. Insufficient air causes incomplete combustion which can result in carbon monoxide.

In addition to providing combustion air, fresh outdoor air dilutes contaminants in the indoor air. These contaminants may include bleaches, adhesives, detergents, solvents and other contaminants which can corrode furnace components.

The requirements for providing air for combustion and ventilation depend largely on whether the furnace is installed in an unconfined or a confined space.

Unconfined Space

An unconfined space is an area such as a basement or large equipment room with a volume greater than 50 cubic feet (1.42 m3) per 1,000 Btu (.29 kW) per hour of the combined input rating of all appliances installed in that space. This space also includes adjacent rooms which are not separated by a door. Though an area may appear to be unconfined, it might be necessary to bring in outdoor air for combustion if the structure does not provide enough air by infiltration. If the furnace is located in a building of tight construction with weather stripping and caulking around the windows and doors, follow the procedures in the Air from Outside section

Confined Space

A confined space is an area with a volume less than 50 cubic feet (1.42 m3) per 1,000 Btu (.29 kW) per hour of the combined input rating of all appliances installed in that space. This definition includes furnace closets or small equipment rooms.

When the furnace is installed so that supply ducts carry air circulated by the furnace to areas outside the space containing the furnace, the return air must be handled by ducts which are sealed to the furnace casing and which terminate outside the space containing the furnace.This is especially important when the furnace is mounted on a platform in a confined space such as a closet or small equipment room.

Even a small leak around the base of the unit at the platform or at the return air duct connection can cause a potentially dangerous negative pressure condition. Air for combustion and ventilation can be brought into the confined space either from inside the building or from outside.

Air from Inside

If the confined space that houses the furnace adjoins a space categorized as unconfined, air can be brought in by providing two permanent openings between the two spaces. Each opening must have a minimum free area of 1 square inch (645 mm2) per 1,000 Btu (.29 kW) per hour of total input rating of all gas-fired equipment in the confined space. Each opening must be at least 100 square inches (64516 mm2). One opening shall be within 12 inches (305 mm) of the top of the enclosure and one opening within 12 inches (305 mm) of the bottom. See Figure 4.

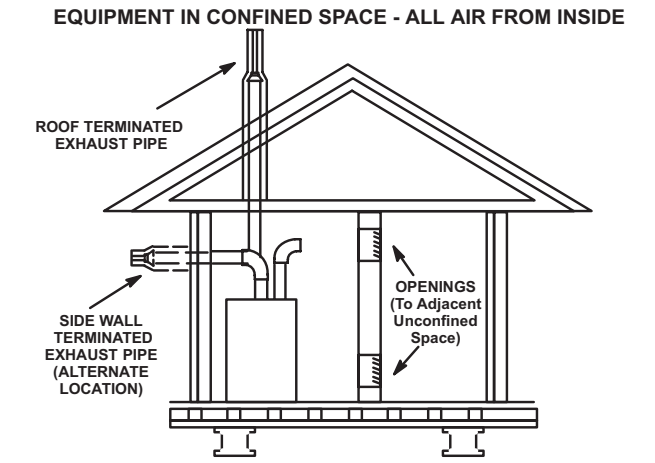

NOTE *- Each opening shall have a free area of at least one square inch per 1,000 Btu (645mm^2 per .29kW) per hour of the total input rating of all equipment in the enclosure, but not less than 100 square inches (64516mm.$^{2)}$.*

Figure 4

Air from Outside

If air from outside is brought in for combustion and ventilation, the confined space shall be provided with two permanent openings. One opening shall be within 12” (305mm) of the top of the enclosure and one within 12” (305mm) of the bottom. These openings must communicate directly or by ducts with the outdoors or spaces (crawl or attic) that freely communicate with the outdoors or indirectly through vertical ducts. Each opening shall have a minimum free area of 1 square inch per 4,000 Btu (645mm2 per 1.17kW) per hour of total input rating of all equipment in the enclosure. When communicating with the outdoors through horizontal ducts, each opening shall have a minimum free area of 1 square inch per 2,000 Btu (645mm2 per .59kW) per total input rating of all equipment in the enclosure (See Figure 5). It is also permissible to bring in air for combustion from a ventilated attic (figure 6) or ventilated crawl space (Figure 7).

EQUIPMENT IN CONFINED SPACE - ALL AIR FROM OUTSIDE
(Inlet Air from Crawl Space and Outlet Air to Outside)

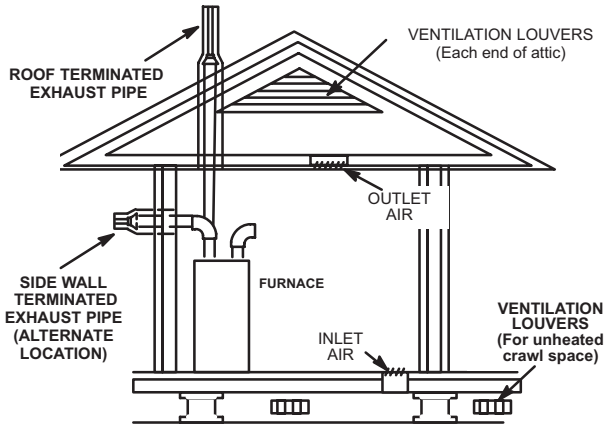

***NOTE**-The inlet and outlet air openings shall each have a free area of at least one square inch per 4,000 Btu (645mm^2 per 1.17kW) per hour of the total input rating of all equipment in the enclosure.*

Figure 5

EQUIPMENT IN CONFINED SPACE
(Inlet Air from Ventilated Attic and Outlet Air to Outside)

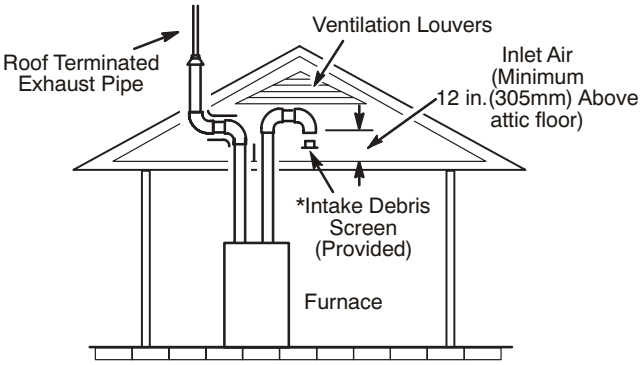

***NOTE**-The inlet and outlet air openings shall each have a free area of at least one square inch per 4,000 Btu (645mm^2 per 1.17kW) per hour of the total input rating of all equipment in the enclosure.*

Figure 6

EQUIPMENT IN CONFINED SPACE
(Inlet Air from Ventilated Crawlspace and Outlet Air to Outside)

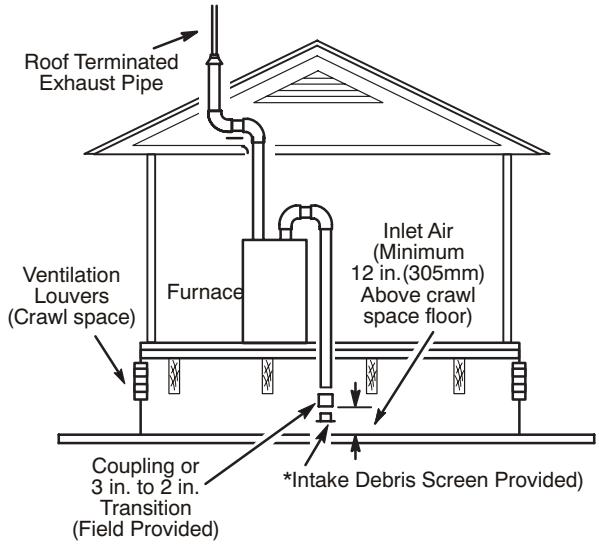

***NOTE**-The inlet and outlet air openings shall each have a free area of at least one square inch per 4,000 Btu (645mm^2 per 1.17kW) per hour of the total input rating of all equipment in the enclosure.*

Figure 7

If air from outside is brought in for combustion and ventilation, the confined space must have two permanent openings. One opening shall be within 12 inches (305 mm) of the top of the enclosure and one opening within 12 inches (305 mm) of the bottom. These openings must communicate directly or by ducts with the outdoors or spaces (crawl or attic) that freely communicate with the outdoors or indirectly through vertical ducts. Each opening shall have a minimum free area of 1 square inch (645 mm2) per 4,000 Btu (1.17 kW) per hour of total input rating of all equipment in the enclosure. See Figure 5 and Figure 8. When communicating with the outdoors through horizontal ducts, each opening shall have a minimum free area of 1 square inch (645 mm2) per 2,000 Btu (.56 kW) per total input rating of all equipment in the enclosure. See Figure 9.

When ducts are used, they shall be of the same cross-sectional area as the free area of the openings to which they connect. The minimum dimension of rectangular air ducts shall be no less than 3 inches (75 mm). In calculating free area, the blocking effect of louvers, grilles, or screens must be considered. If the design and free area of protective covering is not known for calculating the size opening required, it may be assumed that wood louvers will have 20 to 25 percent free area and metal louvers and grilles will have 60 to 75 percent free area. Louvers and grilles must be fixed in the open position or interlocked with the equipment so that they are opened automatically during equipment operation.

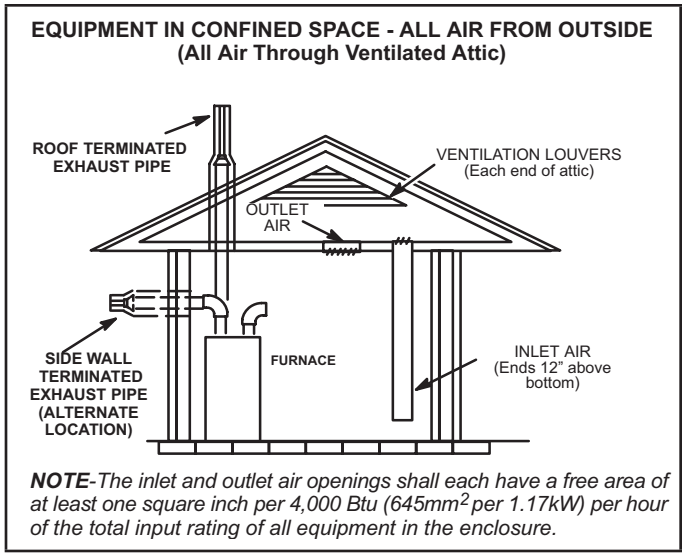

Figure 8

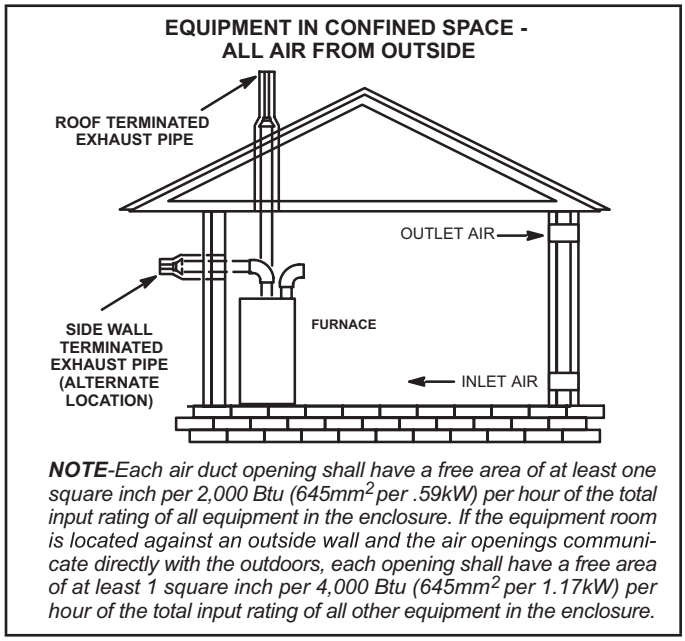

Figure 9

Shipping Bolt Removal

Units with 1/2 hp blower motor are equipped with three flexible legs and one rigid leg. The rigid leg is equipped with a shipping bolt and a flat white plastic washer (rather than the rubber mounting grommet used with a flexible mounting leg). See Figure 10.

The bolt and washer must be removed before the furnace is placed into operation. After the bolt and washer have been removed, the rigid leg will not touch the blower housing.

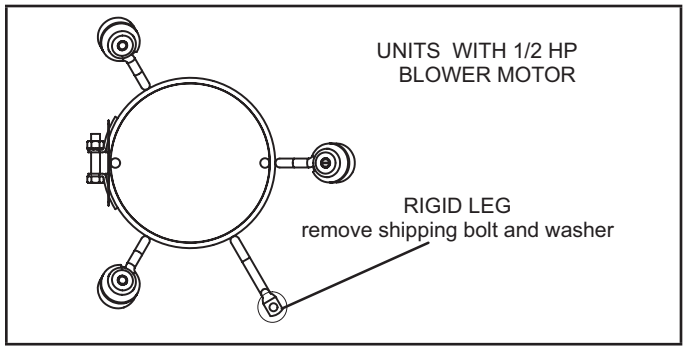

Figure 10

Installation - Setting Equipment

⚠ WARNING

Do not connect the return air duct to the back of the furnace. Doing so will adversely affect the operation of the safety control devices, which could result in personal injury or death.

⚠ WARNING

Blower access panel must be securely in place when blower and burners are operating. Gas fumes, which could contain carbon monoxide, can be drawn into living space resulting in personal injury or death.

Upflow Applications

The EL297UHVK gas furnace can be installed as shipped in the upflow position. Refer to Figure 12 for clearances. Select a location that allows for the required clearances that are listed on the unit nameplate. Also consider gas supply connections, electrical supply, vent connection, condensate trap and drain connections, and installation and service clearances [24 inches (610 mm) at unit front]. The unit must be level from side to side. ***The unit may be positioned from level to ½" toward the front. See Figure 11.***

Allow for clearances to combustible materials as indicated on the unit nameplate.

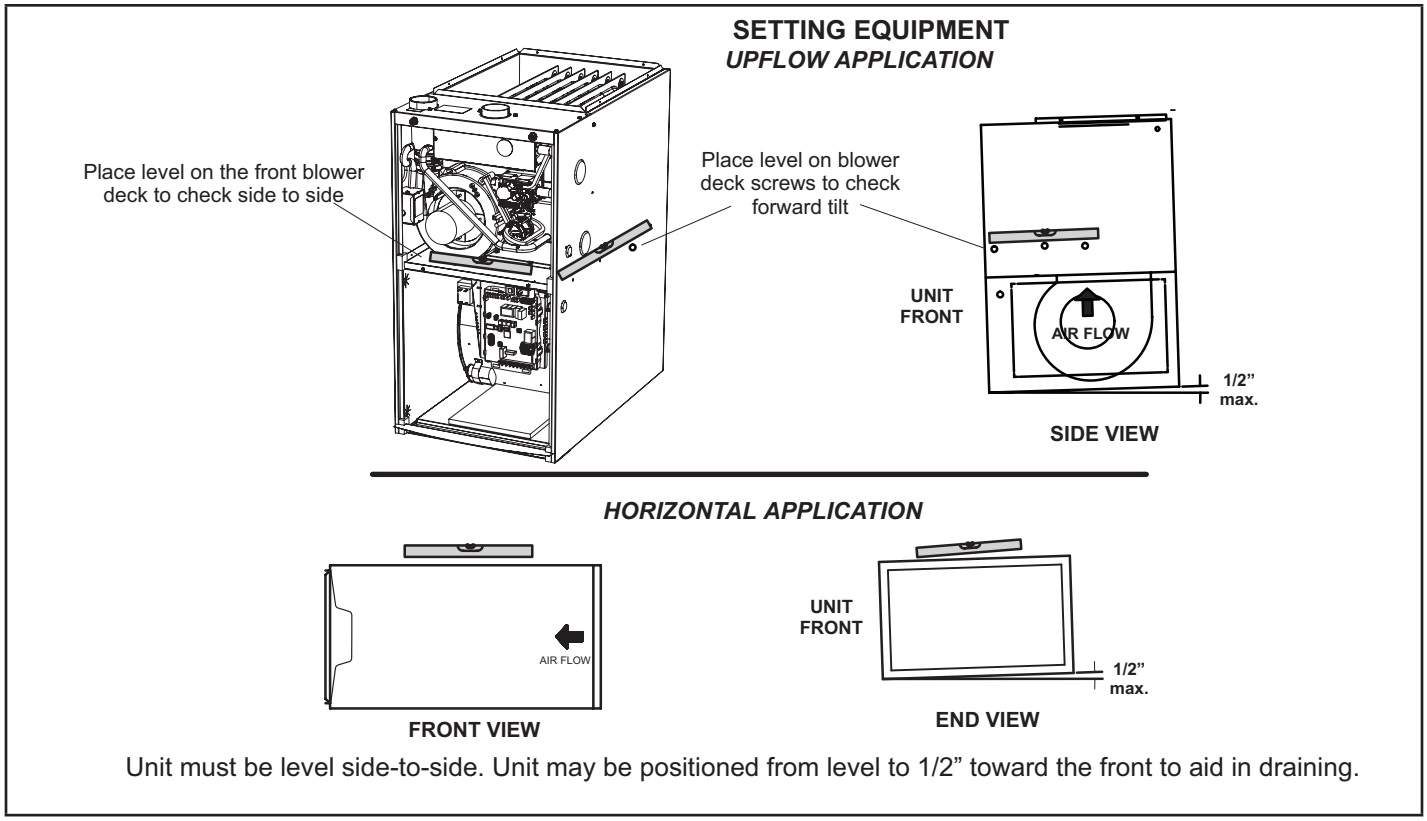
SETTING EQUIPMENT
UPFLOW APPLICATION
Place level on the front blower deck to check side to side
Place level on blower deck screws to check forward tilt
UNIT FRONT
AIR FLOW
1/2" max.
SIDE VIEW
HORIZONTAL APPLICATION
AIR FLOW
FRONT VIEW
UNIT FRONT
1/2" max.
END VIEW
Unit must be level side-to-side. Unit may be positioned from level to 1/2" toward the front to aid in draining.

Figure 11

⚠ WARNING

Improper installation of the furnace can result in personal injury or death. Combustion and flue products must never be allowed to enter the return air system or air in the living space. Use sheet metal screws and joint tape to seal return air system to furnace. In platform installations with furnace return, the furnace should be sealed airtight to the return air plenum. A door must never be used as a portion of the return air duct system. The base must provide a stable support and an airtight seal to the furnace. Allow absolutely no sagging, cracks, gaps, etc.

For no reason should return and supply air duct systems ever be connected to or from other heating devices such as a fireplace or stove, etc. Fire, explosion, carbon monoxide poisoning, personal injury and/or property damage could result.

Installation Clearances

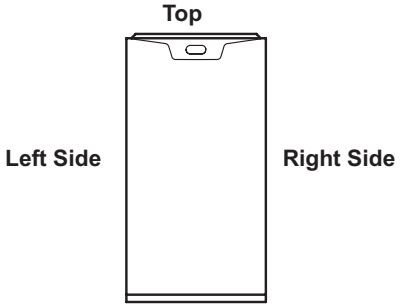

Top/Plenum	1 in. (25 mm)
*Front	0
Back	0
Sides	0†
Vent	0
Floor	0‡

*Front clearance in alcove installation must be 24 in. (610 mm). Maintain a minimum of 24 in. (610 mm) for front service access.
†Allow proper clearances to accommodate condensate trap.
‡For installations on a combustible floor, do not install the furnace directly on carpeting, tile or other combustible materials other than wood flooring.

Figure 12

Return Air Guidelines

Return air can be brought in through the bottom or either side of the furnace installed in an upflow application. If the furnace is installed on a platform with bottom return, make an airtight seal between the bottom of the furnace and the platform to ensure that the furnace operates properly and safely. The furnace is equipped with a removable bottom panel to facilitate installation.

Markings are provided on both sides of the furnace cabinet for installations that require side return air. Cut the furnace cabinet at the maximum dimensions shown on page 2.

Refer to Engineering Handbook for additional information.

EL297UHVK applications which include side return air and a condensate trap installed on the same side of the cabinet (trap can be installed remotely within 5 ft.) require either a return air base or field-fabricated transition to accommodate an optional IAQ accessory taller than 14.5". See Figure 13.

Side Return Air
(with transition and filter)

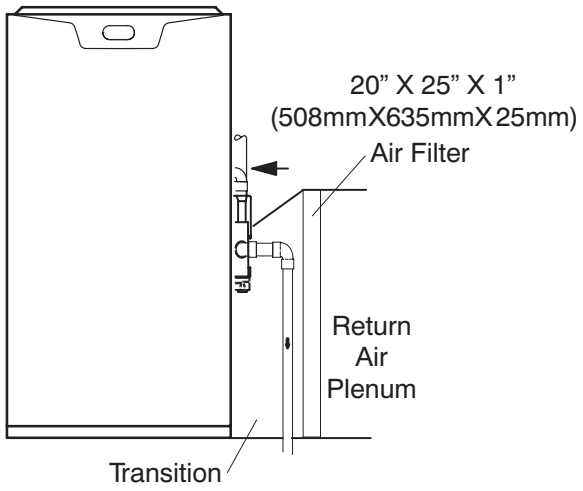

Figure 13

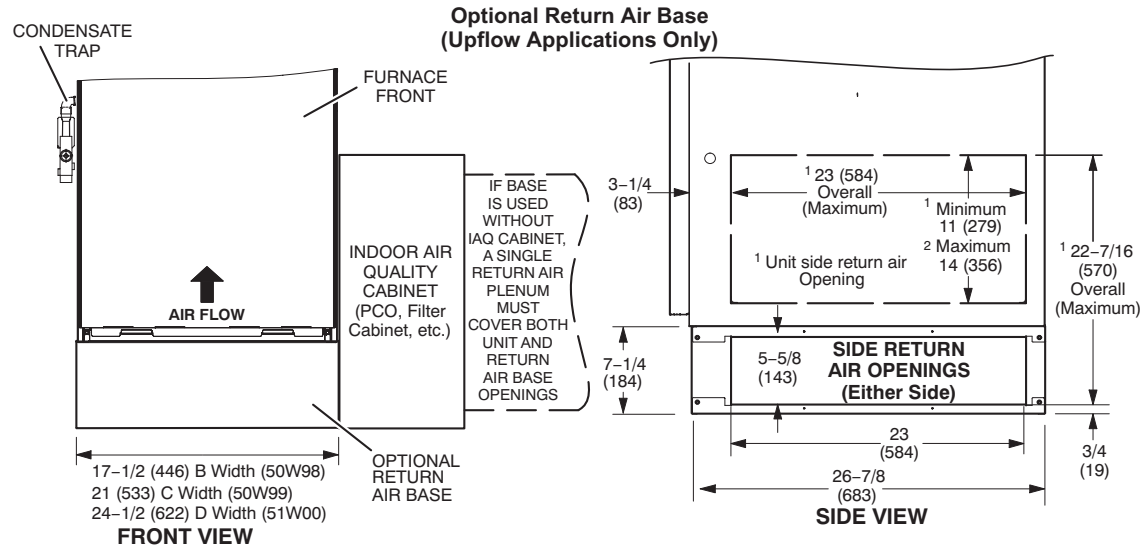

NOTE- Optional side return air filter kits are not for use with return air base.

[1] Both the unit return air opening and the base return air opening must be covered by a single plenum or IAQ cabinet. Minimum unit side return air opening dimensions for units requiring 1800 cfm or more of air (W x H): 23 x 11 in. (584 x 279 mm). The opening can be cut as needed to accommodate plenum or IAQ cabinet while maintaining dimensions shown. Side return air openings must be cut in the field. There are cutting guides stenciled on the cabinet for the side return air opening. The size of the opening must not extend beyond the markings on the furnace cabinet.

[2] To minimize pressure drop, the largest opening height possible (up to 14 inches) is preferred.

Figure 14

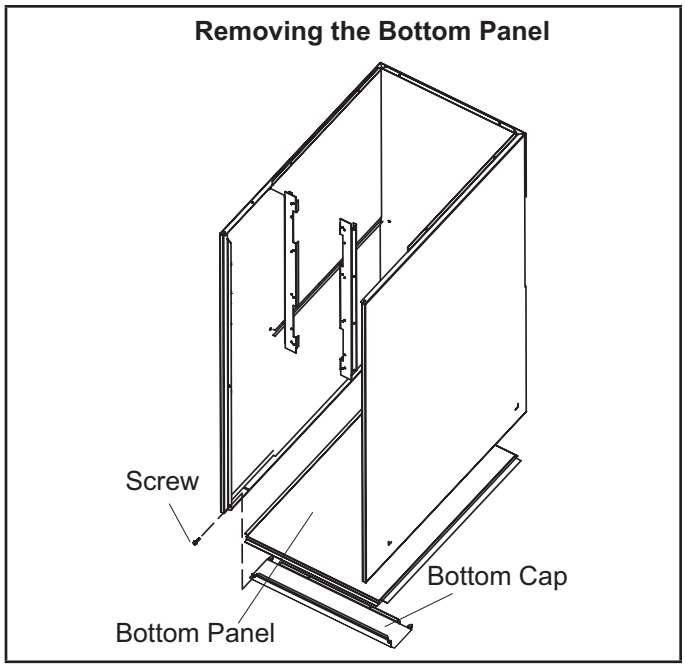

Figure 15

Removing the Bottom Panel

Remove the two screws that secure the bottom cap to the furnace. Pivot the bottom cap down to release the bottom panel. Once the bottom panel has been removed, reinstall the bottom cap. See Figure 15.

Horizontal Applications

⚠ WARNING

Do not install the furnace on its front or back. See Figure 16.

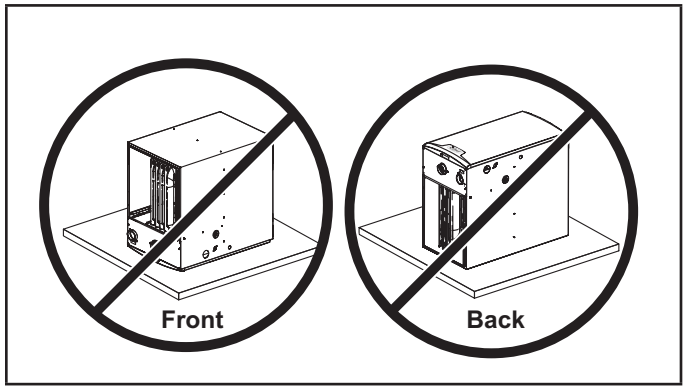

Figure 16

The EL297UHVK furnace can be installed in horizontal applications with either right- or left-hand air discharge. Refer to Figure 17 for clearances in horizontal applications.

Horizontal Application Installation Clearances

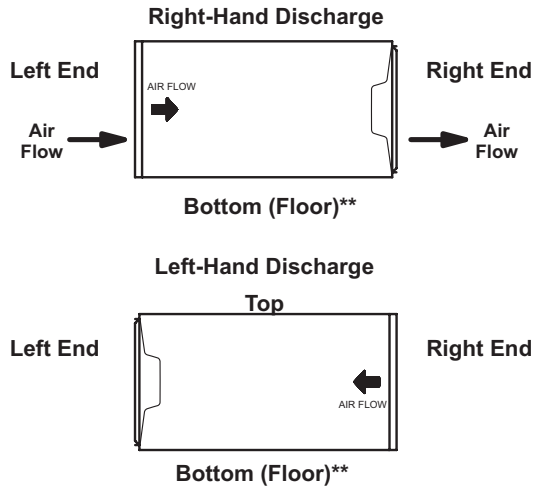

Top	0
Front*	0
Back	0
Ends	0
Vent	0
Floor	0‡

***Front clearance in alcove installation must be 24 in. (610 mm). Maintain a minimum of 24 in. (610 mm) for front service access.**
****An 8" service clearance must be maintained below the unit to provide for servicing of the condensate trap.**
‡For installations on a combustible floor, do not install the furnace directly on carpeting, tile or other combustible materials other than wood flooring.

Figure 17

Suspended Installation of Horizontal Unit

This furnace may be installed in either an attic or a crawlspace. Either suspend the furnace from roof rafters or floor joists, as shown in Figure 18, or install the furnace on a platform, as shown in Figure 19. A horizontal suspension kit (51W10) may be ordered from Lennox or use equivalent.

NOTE - *Heavy-gauge sheet metal straps may be used to suspend the unit from roof rafters or ceiling joists. When straps are used to suspend the unit in this way, support must be provided for both the ends. The straps must not interfere with the plenum or exhaust piping installation.* ***Cooling coils and supply and return air plenums must be supported separately.***

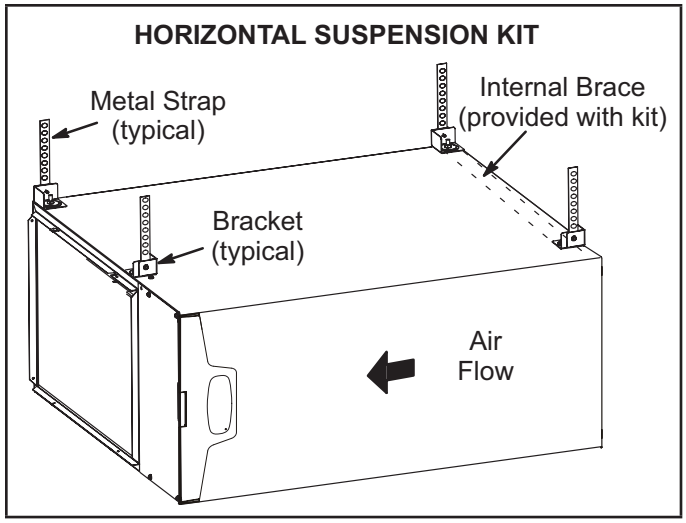

Figure 18

NOTE - *When the furnace is installed on a platform or with the horizontal suspension kit in a crawlspace, it must be elevated enough to avoid water damage, accommodate drain trap and to allow the evaporator coil to drain.*

Platform Installation of Horizontal Unit

1 - Select location for unit keeping in mind service and other necessary clearances. See Figure 17.

2 - Construct a raised wooden frame and cover frame with a plywood sheet. If unit is installed above finished space, install an an auxiliary drain pan under unit. Set unit in drain pan as shown in Figure 19. Leave 8 inches for service clearance below unit for condensate trap.

3 - Provide a service platform in front of unit. When installing the unit in a crawl space, a proper support platform may be created using cement blocks.

4 - Route auxiliary drain line so that water draining from this outlet will be easily noticed by the homeowner.

5 - If necessary, run the condensate line into a condensate pump to meet drain line slope requirements. The pump must be rated for use with condensing furnaces. Protect the condensate discharge line from the pump to the outside to avoid freezing.

6 - Continue with exhaust, condensate and intake piping installation according to instructions.

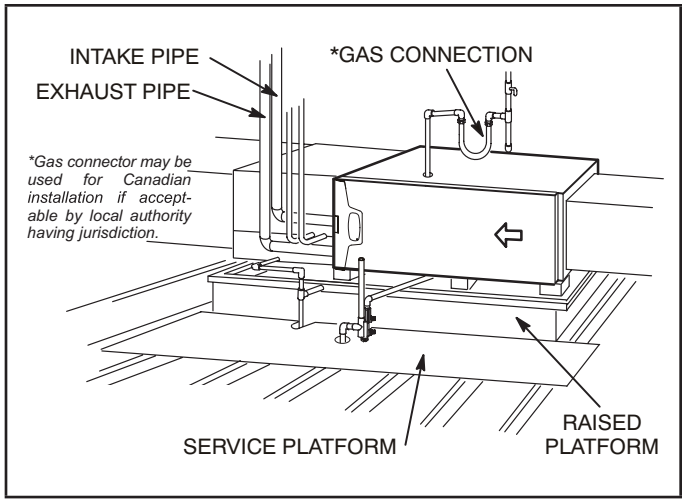

Figure 19

Return Air -- Horizontal Applications

Return air may be brought in only through the end of a furnace installed in the horizontal position. The furnace is equipped with a removable bottom panel to facilitate installation. See Figure 15.

Filters

This unit is not equipped with a filter or rack. A field-provided high velocity rated filter is required for the unit to operate properly. TABLE 1 lists recommended filter sizes. A filter must be in place whenever the unit is operating.

⚠ IMPORTANT

If a highefficiency filter is being installed as part of this system to ensure better indoor air quality, the filter must be properly sized. Highefficiency filters have a higher static pressure drop than standardefficiency glass/foam filters. If the pressure drop is too great, system capacity and performance may be reduced.

The pressure drop may also cause the limit to trip more frequently during the winter and the indoor coil to freeze in the summer, resulting in an increase in the number of service calls.

Before using any filter with this system, check the specifications provided by the filter manufacturer against the data given in the appropriate Lennox Product Specifications bulletin. Additional information is provided in Service and Application Note ACC002 (August 2000).

TABLE 1

Furnace Cabinet Width	Filter Size	
	Side Return	Bottom Return
17-1/2”	16 X 25 X 1 (1)	16 X 25 X 1 (1)
21”	16 X 25 X 1 (1)	20 X 25 X 1 (1)
24-1/2”	16 X 25 X 1 (2)	24 X 25 X 1 (1)

Duct System

Use industry-approved standards to size and install the supply and return air duct system. Refer to ACCA Manual D. This will result in a quiet and low-static system that has uniform air distribution. See below for proper duct installation.

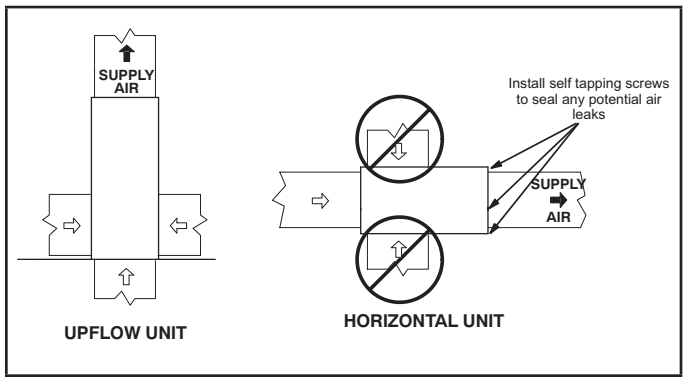

***NOTE -** This furnace is not certified for operation in heating mode (indoor blower operating at selected heating speed) with an external static pressure which exceeds 0.8 inches w.c. Operation at these conditions may result in improper limit operation.*

Supply Air Plenum

If the furnace is installed without a cooling coil, a removable access panel should be installed in the supply air duct. The access panel should be large enough to permit inspection of the heat exchanger. The furnace access panel must always be in place when the furnace is operating and it must not allow leaks. In horizontal units, install self tapping screws in the three evaporator coil screw holes made for upflow applications to seal the top cap to the vestibule panel.

Return Air Plenum

NOTE - Return air must not be drawn from a room where this furnace, or any other gas-fueled appliance (i.e., water heater), or carbon monoxide-producing device (i.e., wood fireplace) is installed.

When return air is drawn from a room, a negative pressure is created in the room. If a gas appliance is operating in a room with negative pressure, the flue products can be pulled back down the vent pipe and into the room. This reverse flow of the flue gas may result in incomplete combustion and the formation of carbon monoxide gas. This raw gas or toxic fumes might then be distributed throughout the house by the furnace duct system.

Return air can be brought in through the bottom or either side of the furnace (return air brought into either side of furnace allowed only in upflow applications). If a furnace with bottom return air is installed on a platform, make an airtight seal between the bottom of the furnace and the platform to ensure that the unit operates properly and safely. Use fiberglass sealing strips, caulking, or equivalent sealing method between the plenum and the furnace cabinet to ensure a tight seal. If a filter is installed, size the return air duct to fit the filter frame.

Pipe & Fittings Specifications

All pipe, fittings, primer and solvent cement must conform with American National Standard Institute and the American Society for Testing and Materials (ANSI/ASTM) standards. The solvent shall be free flowing and contain no lumps, undissolved particles or any foreign matter that adversely affects the joint strength or chemical resistance of the cement. The cement shall show no gelation, stratification, or separation that cannot be removed by stirring. Refer to the TABLE 2 below for approved piping and fittings..

TABLE 2

PIPING AND FITTINGS SPECIFICATIONS

Schedule 40 PVC (Pipe)	D1785
Schedule 40 PVC (Fittings)	D2466
Schedule 40 CPVC (Pipe)	F441
Schedule 40 CPVC (Fittings)	F438
SDR-21 PVC or SDR-26 PVC (Pipe)	D2241
SDR-21 CPVC or SDR-26 CPVC (Pipe)	F442
Schedule 40 ABS (Pipe)	D1527
Schedule 40 ABS (Fittings)	D2468
ABS-DWV (Drain Waste & Vent) (Pipe & Fittings)	D2661
PVC-DWV (Drain Waste & Vent) Pipe & Fittings)	D2665
PRIMER & SOLVENT CEMENT	**ASTM SPECIFICATION**
PVC & CPVC Primer	F656
PVC Solvent Cement	D2564
CPVC Solvent Cement	F493
ABS Solvent Cement	D2235
PVC/CPVC/ABS All Purpose Cement For Fittings & Pipe of the same material	D2564, D2235, F493
ABS to PVC or CPVC Transition Solvent Cement	D3188
CANADA PIPE & FITTING & SOLVENT CEMENT	**MARKING**
PVC & CPVC Pipe and Fittings	ULCS636
PVC & CPVC Solvent Cement	
ABS to PVC or CPVC Transition Cement	
POLYPROPYLENE VENTING SYSTEM	
PolyPro® by Duravent	
InnoFlue® by Centrotherm	
UL 1738 CERTIFIED GAS VENTING SYSTEM	
IPEX System1738 Schedule 40 PVC Pipes and Fittings	UL1738
IPEX System1738 PVC FGV Cement & Primer	

⚠ CAUTION

Solvent cements for plastic pipe are flammable liquids and should be kept away from all sources of ignition. Do not use excessive amounts of solvent cement when making joints. Good ventilation should be maintained to reduce fire hazard and to minimize breathing of solvent vapors. Avoid contact of cement with skin and eyes.

⚠ IMPORTANT

EL297UHVK exhaust and intake connections are made of PVC. Use PVC primer and solvent cement when using PVC vent pipe. When using ABS vent pipe, use transitional solvent cement to make connections to the PVC fittings in the unit.

Use PVC primer and solvent cement or ABS solvent cement meeting ASTM specifications, refer to Table 2. As an alternate, use all purpose cement, to bond ABS, PVC, or CPVC pipe when using fittings and pipe made of the same materials. Use transition solvent cement when bonding ABS to either PVC or CPVC.

Low temperature solvent cement is recommended during cooler weather. Metal or plastic strapping may be used for vent pipe hangers. Uniformly apply a liberal coat of PVC primer for PVC or use a clean dry cloth for ABS to clean inside socket surface of fitting and male end of pipe to depth of fitting socket.

Canadian Applications Only - *Pipe, fittings, primer and solvent cement used to vent (exhaust) this appliance must be certified to ULC S636 and supplied by a single manufacturer as part of an approved vent (exhaust) system. In addition, the first three feet of vent pipe from the furnace flue collar must be accessible for inspection.*

TABLE 3

OUTDOOR TERMINATION USAGE*

Input Size	Vent Pipe Dia. in.	STANDARD				CONCENTRIC		
		Flush Mount Kit	Wall Kit		Field Fabricated	1-1.2 inch	2 inch	3 inch
			2 inch	3 inch				
		51W11 (US) 51W12 (CA)	22G44 (US) 430G28 (CA)	44J40 (US) 481J20 (CA)		71M80 (US) 444W92 (CA)	69M29 (US) 444W92 (CA)	60L46 (US) 444W93 (CA)
045	[6]1-1/2	[3]YES	YES	[1]YES	[5]YES	[2]YES		
	2	[3]YES	YES	[1]YES	[5]YES	[2]YES		
	2-1/2	[3]YES	YES	[1]YES	[5]YES	[2]YES		
	3	[3]YES	YES	[1]YES	[5]YES	[2]YES		
070	[6]1-1/2	[3]YES	YES	[1]YES	[5]YES	[2]YES		
	2	[3]YES	YES	[1]YES	[5]YES	[2]YES		
	2-1/2	[3]YES	YES	[1]YES	[5]YES	[2]YES		
	3	[3]YES	YES	[1]YES	[5]YES	[2]YES		
090	2	[3]YES		YES	[5]YES		YES	YES
	2-1/2	[3]YES		YES	[5]YES		YES	YES
	3	[3]YES		YES	[5]YES		YES	YES
110	2	YES		YES	[5]YES		YES	YES
	2-1/2	YES		YES	[5]YES		YES	YES
	3	YES		YES	[5]YES		YES	YES
135	3	YES		YES	[5]YES			YES

NOTE - Standard Terminations do not include any vent pipe or elbows external to the structure. Any vent pipe or elbows external to the structure must be included in total vent length calculations. See vent length tables.

* Kits must be properly installed according to kit instructions.

1 Requires field-provided outdoor 1-1/2" exhaust accelerator.

2 Concentric kits 71M80 and 44W92 include 1-1/2" outdoor accelerator, when used with 045 and 070 input models. 1-1/2 in. pipe must be transitioned to 2 in. when used with a concentric kit,

3 Flush mount kits 51W11 and 51W12 includes 1-1/2 in. outdoor exhaust accelerator, required when used with 045, 070 and 090 input models. 1-1/2 in. pipe must be transitioned to 2 in. pipe when used with the flushmount kit.

4 Termination kits 30G28, 44W92, 44W93 and 81J20 are certified to ULC S636 for use in Canada only.

5 See table 8 for vent accelerator requirements.

6 2 in. pipe to 1-1/2 in. reducer required and must be field provided.

Joint Cementing Procedure

All cementing of joints should be done according to the specifications outlined in ASTM D 2855.

⚠ DANGER

DANGER OF EXPLOSION!

Fumes from PVC glue may ignite during system check. Allow fumes to dissipate for at least 5 minutes before placing unit into operation..

1 - Measure and cut vent pipe to desired length.

2 - Debur and chamfer end of pipe, removing any ridges or rough edges. If end is not chamfered, edge of pipe may remove cement from fitting socket and result in a leaking joint.

NOTE - *Check the inside of vent pipe thoroughly for any obstruction that may alter furnace operation.*

3 - Clean and dry surfaces to be joined.

4 - Test fit joint and mark depth of fitting on outside of pipe.

5 - Uniformly apply a liberal coat of PVC primer for PVC or use a clean dry cloth for ABS to clean inside socket surface of fitting and male end of pipe to depth of fitting socket.

NOTE - *Time is critical at this stage. Do not allow primer to dry before applying cement.*

6 - Promptly apply solvent cement to end of pipe and inside socket surface of fitting. Cement should be applied lightly but uniformly to inside of socket. Take care to keep excess cement out of socket. Apply second coat to end of pipe.

7 - Immediately after applying last coat of cement to pipe, and while both inside socket surface and end of pipe are wet with cement, forcefully insert end of pipe into socket until it bottoms out. Turn PVC pipe 1/4 turn during assembly (but not after pipe is fully inserted) to distribute cement evenly. DO NOT turn ABS or cellular core pipe.

***NOTE -** Assembly should be completed within 20 seconds after last application of cement. Hammer blows should not be used when inserting pipe.*

8 - After assembly, wipe excess cement from pipe at end of fitting socket. A properly made joint will show a bead around its entire perimeter. Any gaps may indicate an improper assembly due to insufficient solvent.

9 - Handle joints carefully until completely set.

Venting Practices

***NOTE -** For any Low GWP refrigerant systems with exposed line set joints installed in the same space, each non-direct vent furnace system must have a refrigerant detection sensor installed below the level of the burners (See"SECONDARY SENSOR REQUIREMENTS" on page 61). Any direct vent furnace system is not subject to this requirement*

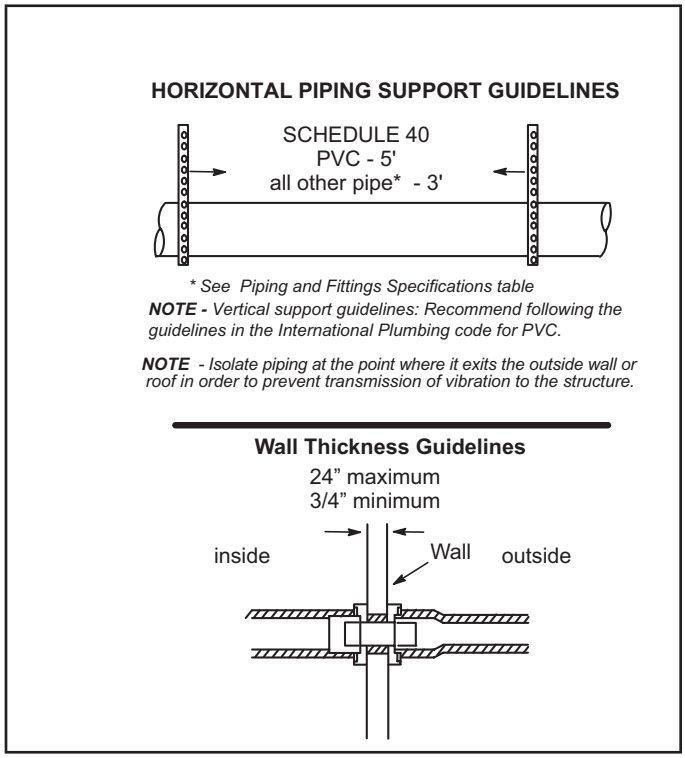

Figure 20

1 - In areas where piping penetrates joists or interior walls, hole must be large enough to allow clearance on all sides of pipe through center of hole using a hanger.

2 - When furnace is installed in a residence where unit is shut down for an extended period of time, such as a vacation home, make provisions for draining condensate collection trap and lines.

Removal of the Furnace from Common Vent

In the event that an existing furnace is removed from a venting system commonly run with separate gas appliances, the venting system is likely to be too large to properly vent the remaining attached appliances.

Conduct the following test while each appliance is operating and the other appliances (which are not operating) remain connected to the common venting system. If the venting system has been installed improperly, you must correct the system as indicated in the general venting requirements section.

⚠ WARNING

CARBON MONOXIDE POISONING HAZARD

Failure to follow the steps outlined below for each appliance connected to the venting system being placed into operation could result in carbon monoxide poisoning or death.

The following steps shall be followed for each appliance connected to the venting system being placed into operation, while all other appliances connected to the venting system are not in operation:

1 - Seal any unused openings in the common venting system.

2 - Inspect the venting system for proper size and horizontal pitch. Determine that there is no blockage, restriction, leakage, corrosion, or other deficiencies which could cause an unsafe condition.

3 - Close all building doors and windows and all doors between the space in which the appliances remaining connected to the common venting system are located and other spaces of the building. Turn on clothes dryers and any appliances not connected to the common venting system. Turn on any exhaust fans, such as range hoods and bathroom exhausts, so they will operate at maximum speed. Do not operate a summer exhaust fan. Close fireplace dampers.

4 - Follow the lighting instructions. Turn on the appliance that is being inspected. Adjust the thermostat so that the appliance operates continuously.

5 - After the main burner has operated for 5 minutes, test for leaks of flue gases at the draft hood relief opening. Use the flame of a match or candle.

6 - After determining that each appliance connected to the common venting system is venting properly, (step 3 return all doors, widows, exhaust fans, fireplace dampers, and any other gas-burning appliances to their previous mode of operation.

7 - If a venting problem is found during any of the preceding tests, the common venting system must be modified to correct the problem.

Resize the common venting system to the minimum vent pipe size determined by using the appropriate tables in Appendix G. (These are in the current standards

REPLACING FURNACE THAT WAS PART OF A COMMON VENT SYSTEM

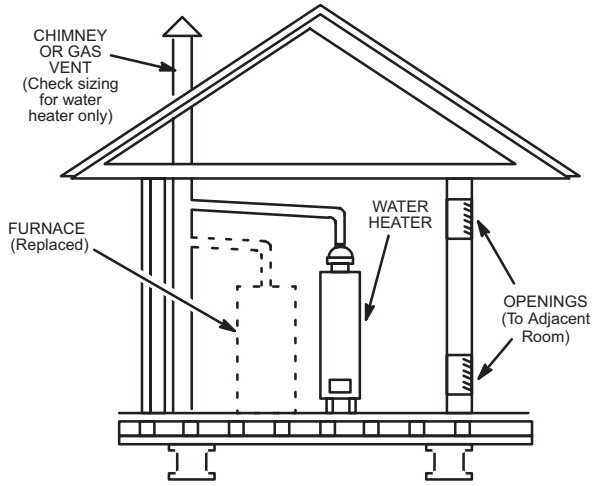

If replacing a furnace which was commonly vented with another gas appliance, the size of the existing vent pipe for that gas appliance must be checked. Without the heat of the original furnace flue products, the existing vent pipe is probably oversized for the single water heater or other appliance. The vent should be checked for proper draw with the remaining appliance.

Figure 21

Exhaust Piping (Figure 22, Figure 24 and Figure 25)

Route piping to outside of structure. Continue with installation following instructions given in piping termination section.

⚠ CAUTION

Do not discharge exhaust into an existing stack or stack that also serves another gas appliance. If vertical discharge through an existing unused stack is required, insert PVC pipe inside the stack until the end is even with the top or outlet end of the metal stack.

⚠ CAUTION

The exhaust vent pipe operates under positive pressure and must be completely sealed to prevent leakage of combustion products into the living space.

Vent Piping Guidlines

NOTE - *Lennox has approved the use of DuraVent® and Centrotherm manufactured vent pipe and terminations as an option to PVC. When using the PolyPro® by DuraVent or InnoFlue® by Centrotherm venting system the vent pipe requirements stated in the unit installation instruction – minimum & maximum vent lengths, termination clearances, etc. – apply and must be followed. Follow the instructions provided with PoyPro by DuraVent and InnoFlue by Centrotherm venting system for assembly or if requirements are more restrictive. The PolyPro by Duravent and InnoFlue by Centrotherm venting system must also follow the uninsulated*

The EL297UHVK can be installed as either a Non-Direct Vent or a Direct Vent gas central furnace.

NOTE - *In Non-Direct Vent installations, combustion air is taken from indoors or ventilated attic or crawlspace and flue gases are discharged outdoors. In Direct Vent installations, combustion air is taken from outdoors and flue gases are discharged outdoors.*

Intake and exhaust pipe sizing -- Size pipe according to TABLE 4 (minimum) and TABLE 5 (maximum). Count all elbows inside and outside the home.

Regardless of the diameter of pipe used, the standard roof and wall terminations described in section Exhaust Piping Terminations should be used. Exhaust vent termination pipe is sized to optimize the velocity of the exhaust gas as it exits the termination. Refer to TABLE 8. In some applications which permit the use of several different sizes of vent pipe, a combination vent pipe may be used. Contact Lennox' Application Department for assistance in sizing vent pipe in these applications.

NOTE - *The exhaust collar on all models is sized to accommodate 2" Schedule 40 vent pipe. In horizontal applications, any transition to exhaust pipe larger than 2" must be made in vertical runs of the pipe. Therefore a 2" elbow must be added before the pipe is transitioned to any size larger than 2". This elbow must be added to the elbow count used to determine acceptable vent lengths. Contact the Application Department for more information concerning sizing of vent systems which include multiple pipe sizes.*

Horizontal Installation Offset Requirements

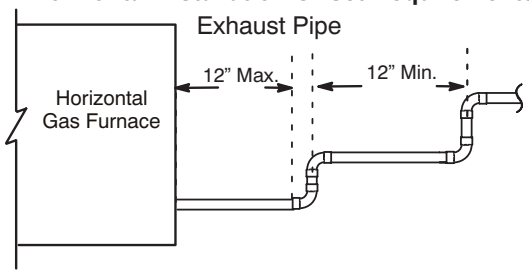

NOTE - *All horizontal runs of exhaust pipe must slope back toward unit. A minimum of 1/4" (6mm) drop for each 12" (305mm) of horizontal run is mandatory for drainage.*
NOTE *- Exhaust pipe MUST be glued to furnace exhaust fitting, unless the optional glueless vent adapter kit 17H92 is used..*
NOTE *- Exhaust piping should be checked carefully to make sure there are no sags or low spots.*

Figure 22

TABLE 4

MINIMUM VENT PIPE LENGTHS

EL297UHVK MODEL	MIN. VENT LENGTH*
045, 070, 090, 110, 135	15 ft. or 5 ft plus 2 elbows or 10 ft plus 1 elbow

*Any approved termination may be added to the minimum length listed. *Two 45 degree elbows are the equivalent to one 90 degree elbow.*

NOTE - *Lennox offers a glueless vent adapter kit 17H92 as an option for exhaust exiting at the furnace top cap coupling. If the kit is not used, then the exhaust pipe MUST be glued to the furnace exhaust fitting.*

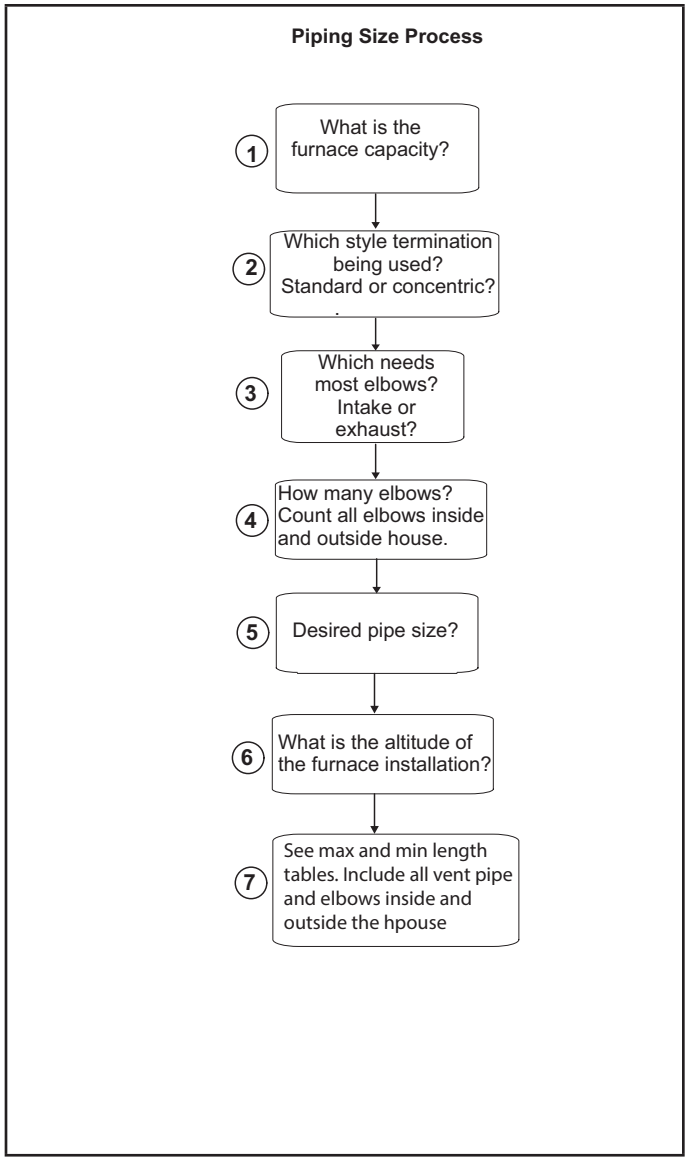

Figure 23

⚠ IMPORTANT

Do not use screens or perforated metal in exhaust or intake terminations. Doing so will cause freeze-ups and may block the terminations.

TABLE 5

Maximum Allowable Intake or Exhaust Vent Length in Feet

NOTE - Size intake and exhaust pipe length separately. Values in table are for Intake OR Exhaust, not combined total. Both Intake and Exhaust must be same pipe size.

Standard Termination at Elevation 0 - 4500 ft

No Of 90° Elbows Used	1-1/2" Pipe					2" Pipe					2-1/2" Pipe					3" Pipe				
	Model					Model					Model					Model				
	045	070	090	110	135	045	070	090	110	135	045	070	090	110	135	045	070	090	110	135
1	25	20	n/a	n/a	n/a	81	66	44	24	n/a	115	115	93	58	n/a	138	137	118	118	114
2	20	15				76	61	39	19		110	110	88	53		133	132	113	113	109
3	15	10				71	56	34	14		105	105	83	48		128	127	108	108	104
4	10	n/a				66	51	29	n/a		100	100	78	43		123	122	103	103	99
5	n/a					61	46	24			95	95	73	38		118	117	98	98	94
6						56	41	19			90	90	68	33		113	112	93	93	89
7						51	36	14			85	85	63	28		108	107	88	88	84
8						46	31	n/a			80	80	58	23		103	102	83	83	79
9						41	26				75	75	53	18		98	97	78	78	74
10						36	21				70	70	48	13		93	92	73	73	69

Standard Termination Elevation 4500 - 10,000 ft

No Of 90° Elbows Usedl	1-1/2" Pipe					2" Pipe					2-1/2" Pipe					3" Pipe				
	Model					Model					Model					Model				
	045	070	090	110	135	045	070	090	110	135	045	070	090	110	135	045	070	090	110	135
1	25	20	n/a	n/a	n/a	81	66	44	n/a	n/a	115	115	93	58	n/a	138	137	118	118	114
2	20	15				76	61	39			110	110	88	53		133	132	113	113	109
3	15	10				71	56	34			105	105	83	48		128	127	108	108	104
4	10	n/a				66	51	29			100	100	78	43		123	122	103	103	99
5	n/a					61	46	24			95	96	73	38		118	117	98	98	94
6						56	41	19			90	90	68	33		113	112	93	93	89
7						51	36	14			85	85	63	28		108	107	88	88	84
8						46	31	n/a			80	80	58	23		103	102	83	83	79
9						41	26				75	75	53	18		98	97	78	78	74
10						36	21				70	70	48	13		93	92	73	73	69

See concentric terminations next page.

TABLE 5 Continued

Maximum Allowable Intake or Exhaust Vent Length in Feet

NOTE - Size intake and exhaust pipe length separately. Values in table are for Intake OR Exhaust, not combined total. Both Intake and Exhaust must be same pipe size.

Concentric Termination at Elevation 0 - 4500 ft

No Of 90° Elbows Used	1-1/2" Pipe					2" Pipe					2-1/2" Pipe					3" Pipe				
	Model					Model					Model					Model				
	045	070	090	110	135	045	070	090	110	135	045	070	090	110	135	045	070	090	110	135
1	20	15	n/a	n/a	n/a	73	58	42	22	n/a	105	105	89	54	n/a	121	121	114	114	105
2	15	10				68	53	37	17		100	100	84	49		116	116	109	109	100
3	10	n/a				63	48	32	12		95	95	79	44		111	111	104	104	95
4	n/a					58	43	27	n/a		90	90	74	39		106	106	99	99	90
5						53	38	22			85	85	69	34		101	101	94	94	85
6						48	33	17			80	80	64	29		96	96	89	89	80
7						43	28	12			75	75	59	24		91	91	84	84	75
8						38	23	n/a			70	70	54	19		86	86	79	79	70
9						33	18				65	65	49	14		81	81	74	74	65
10						28	13				60	60	44	n/a		76	76	69	69	60

Concentric Termination Elevation 4500 - 10,000 ft

No Of 90° Elbows Used	1-1/2" Pipe					2" Pipe					2-1/2" Pipe					3" Pipe				
	Model					Model					Model					Model				
	045	070	090	110	135	045	070	090	110	135	045	070	090	110	135	045	070	090	110	135
1	20	15	n/a	n/a	n/a	73	58	42	n/a	n/a	105	105	89	54	n/a	121	121	114	114	105
2	15	10				68	53	37			100	100	84	49		116	116	109	109	100
3	10	n/a				63	48	32			95	95	79	44		111	111	104	104	95
4	n/a					58	43	27			90	90	74	39		106	106	99	99	90
5						53	38	22			85	85	69	34		101	101	94	94	85
6						48	33	17			80	80	64	29		96	96	89	89	80
7						43	28	12			75	75	59	24		91	91	84	84	75
8						38	23	n/a			70	70	54	19		86	86	79	79	70
9						33	18				65	65	49	14		81	81	74	74	65
10						28	13				60	60	44	n/a		76	76	69	69	60

TABLE 6

Maximum Allowable Exhaust Vent Lengths With Furnace Installed in a Closet or Basement Using Ventilated Attic or Crawl Space For Intake Air in Feet

NOTE - Size intake and exhaust pipe length separately. Values in table are for Intake OR Exhaust, not combined total. Both Intake and Exhaust must be same pipe size.

NOTE - Additional vent pipe and elbows used to terminate the vent pipe outside the structure must be included in the total vent length calculation

Standard Termination at Elevation 0 - 4500 ft																				
No Of 90° Elbows Used	1-1/2" Pipe					2" Pipe					2-1/2" Pipe					3" Pipe				
	Model					Model					Model					Model				
	045	070	090	110	135	045	070	090	110	135	045	070	090	110	135	045	070	090	110	135
1	20	15				71	56	34	14		100	100	78	43		118	117	98	98	94
2	15	10				66	51	29	9		95	95	73	38		113	112	93	93	89
3	10					61	46	24	4		90	90	68	33		108	107	88	88	84
4						56	41	19			85	85	63	28		103	102	83	83	79
5			n/a	n/a	n/a	51	36	14		n/a	80	80	58	23	n/a	98	97	78	78	74
6		n/a				46	31	9			75	75	53	18		93	92	73	73	69
7	n/a					41	26	4	n/a		70	70	48	13		88	87	68	68	64
8						36	21				65	65	43	8		83	82	63	63	59
9						31	16	n/a			60	60	38	3		78	77	58	58	54
10						26	11				55	55	33	n/a		73	72	53	53	49

Standard Termination Elevation 4500 - 10,000 ft																				
No Of 90° Elbows Usedl	1-1/2" Pipe					2" Pipe					2-1/2" Pipe					3" Pipe				
	Model					Model					Model					Model				
	045	070	090	110	135	045	070	090	110	135	045	070	090	110	135	045	070	090	110	135
1	20	15				71	56	34			100	100	78	43		118	117	98	98	94
2	15	10				66	51	29			95	95	73	38		113	112	93	93	89
3	10					61	46	24			90	90	68	33		108	107	88	88	84
4						56	41	19			85	85	63	28		103	102	83	83	79
5			n/a	n/a	n/a	51	36	14	n/a	n/a	80	80	58	23	n/a	98	97	78	78	74
6		n/a				46	31	9			75	75	53	18		93	92	73	73	69
7	n/a					41	26	4			70	70	48	13		88	87	68	68	64
8						36	21				65	65	43	8		83	82	63	63	59
9						31	16	n/a			60	60	38	3		78	77	58	58	54
10						26	11				55	55	33	n/a		73	72	53	53	49

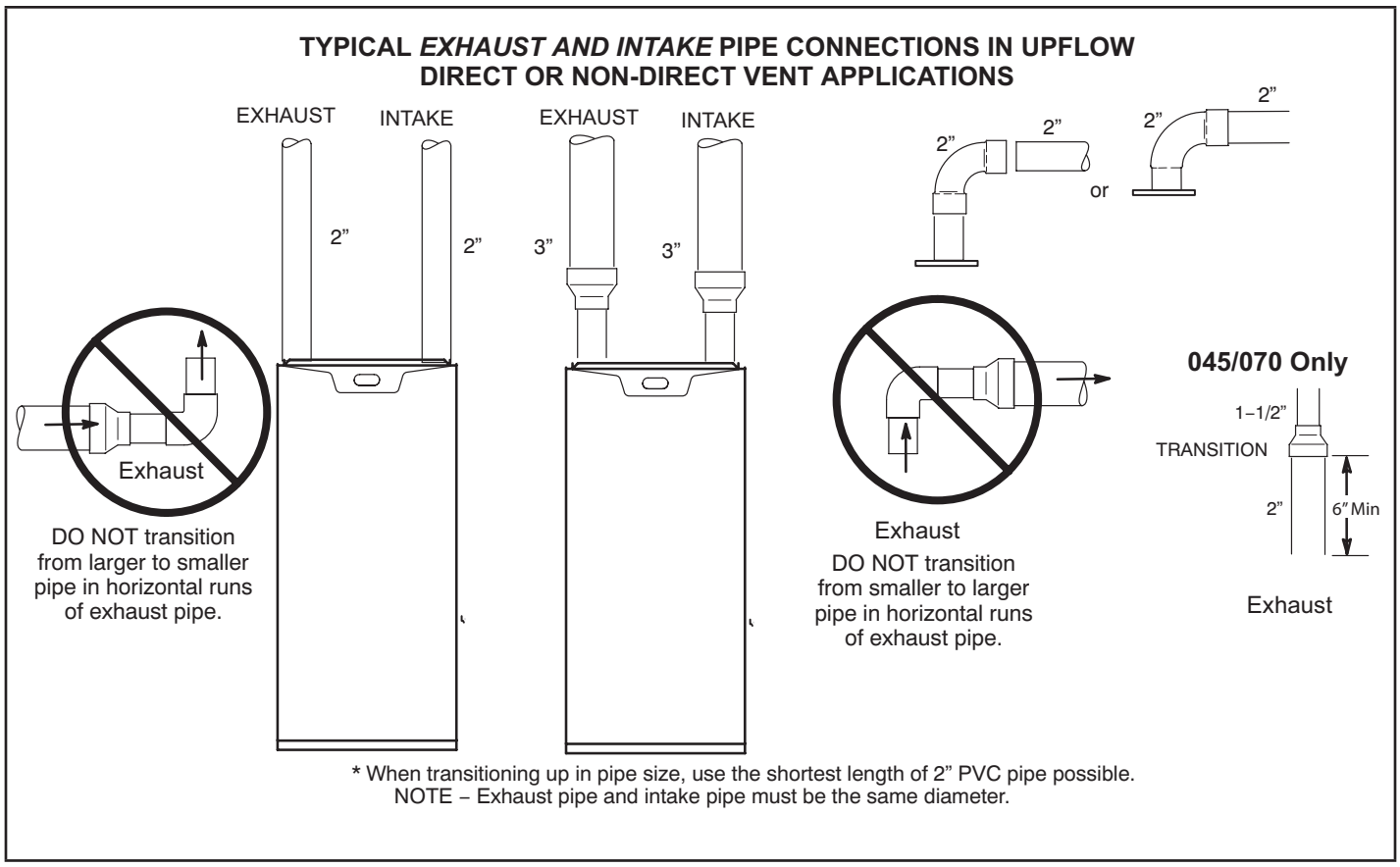

Figure 24

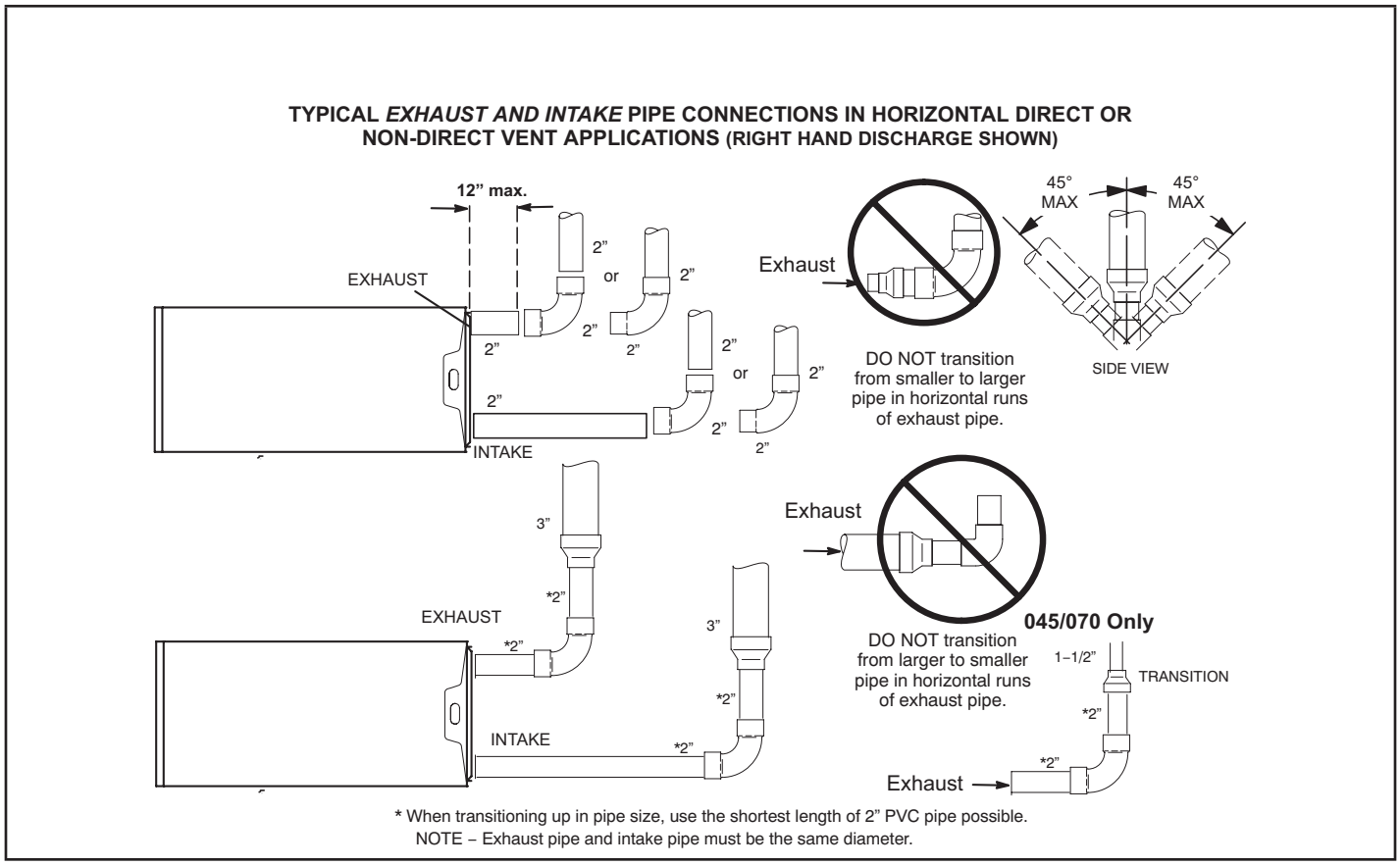

Figure 25

Intake Piping

The EL297UHVK furnace may be installed in either **direct vent** or **non-direct vent** applications. In non-direct vent applications, when intake air will be drawn into the furnace from the surrounding space, the indoor air quality must be considered and guidelines listed in Combustion, Dilution and Ventilation Air section must be followed.

Follow the next two steps when installing the unit in **Direct Vent applications,** where combustion air is taken from outdoors and flue gases are discharged outdoors. **The provided air intake screen must not be used in direct vent applications (outdoors).**

1 - Use transition solvent cement or a sheet metal screw to secure the intake pipe to the inlet air connector.

2 - Route piping to outside of structure. Continue with installation following instructions given in general guidelines for piping terminations and intake and exhaust piping terminations for direct vent sections. Refer to TABLE 5 for pipe sizes.

TYPICAL AIR INTAKE PIPE CONNECTIONS
UPFLOW NON–DIRECT
VENT APPLICATIONS

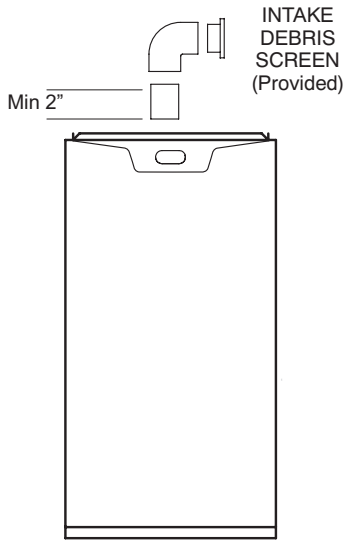

NOTE *- Debris screen and elbow may be rotated, so that screen may be positioned to face forward or to either side.*

Figure 26

TYPICAL AIR INTAKE PIPE CONNECTIONS
HORIZONTAL NON–DIRECT VENT APPLICATIONS
(Horizontal Right–Hand Air Discharge Application Shown)

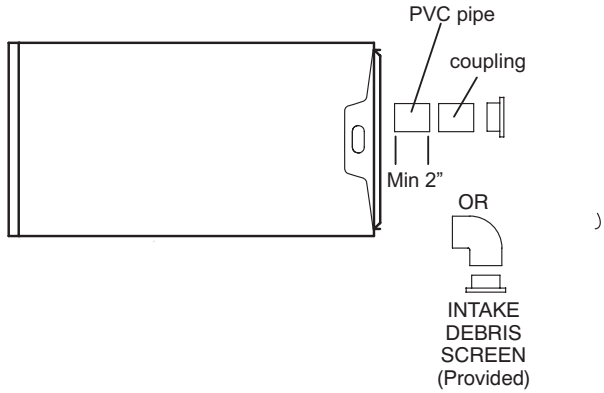

NOTE *- Debris screen may be positioned straight out (preferred) or with an elbow rotated to face down.*

Figure 27

Follow the next two steps when installing the unit in **Non-Direct Vent** applications where combustion air is taken from indoors or ventilated attic or crawlspace and flue gases are discharged outdoors.

1 - Use field-provided materials and the factory-provided air intake screen to route the intake piping as shown in Figure 26 or Figure 27. Maintain a minimum clearance of 3” (76mm) around the air intake opening. The air intake opening (with the protective screen) should always be directed forward or to either side in the upflow position, and either straight out or downward in the horizontal position.

The air intake piping must not terminate too close to the flooring or a platform. Ensure that the intake air inlet will not be obstructed by loose insulation or other items that may clog the debris screen.

2 - If intake air is drawn from a ventilated attic (Figure 28) or ventilated crawlspace (Figure 29) the exhaust vent length must not exceed those listed in table 6. If 3” diameter pipe is used, reduce to 2” diameter pipe at the termination point to accommodate the debris screen.

3 - Use a sheet metal screw to secure the intake pipe to **the connector, if desired.**

⚠ CAUTION

If this unit is being installed in an application with combustion air coming in from a space serviced by an exhaust fan, power exhaust fan, or other device which may create a negative pressure in the space, take care when sizing the inlet air opening. The inlet air opening must be sized to accommodate the maximum volume of exhausted air as well as the maximum volume of combustion air required forall gas appliances serviced by this space.

EQUIPMENT IN CONFINED SPACE
(Inlet Air from Ventilated Attic and Outlet Air to Outside)

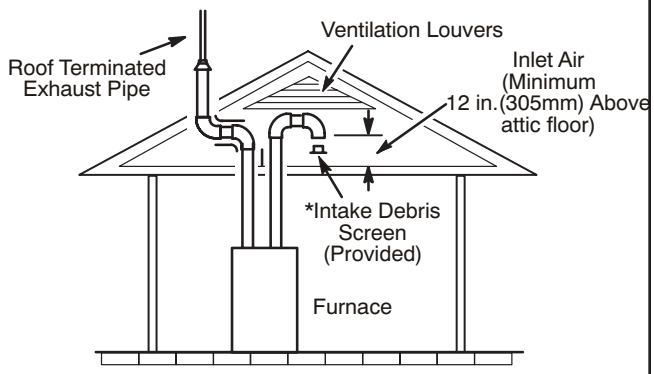

***NOTE**-The inlet and outlet air openings shall each have a free area of at least one square inch per 4,000 Btu (645mm^2 per 1.17kW) per hour of the total input rating of all equipment in the enclosure.*

Figure 28

EQUIPMENT IN CONFINED SPACE
(Inlet Air from Ventilated Crawlspace and Outlet Air to Outside)

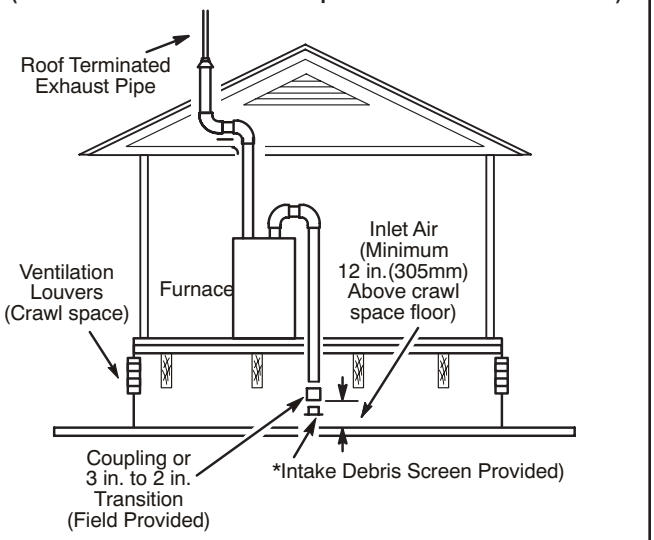

***NOTE**-The inlet and outlet air openings shall each have a free area of at least one square inch per 4,000 Btu (645mm^2 per 1.17kW) per hour of the total input rating of all equipment in the enclosure.*

Figure 29

General Guidelines for Vent Terminations

In Non-Direct Vent applications, combustion air is taken from indoors or ventilated attic or crawlspace and the flue gases are discharged to the outdoors. The EL297UHVK is then classified as a non-direct vent, Category IV gas furnace.

In Direct Vent applications, combustion air is taken from outdoors and the flue gases are discharged to the outdoors. The EL297UHVK is then classified as a direct vent, Category IV gas furnace.

In both Non-Direct Vent and Direct Vent applications, the vent termination is limited by local building codes. In the absence of local codes, refer to the current National Fuel Gas Code ANSI Z223-1/NFPA 54 in U.S.A., and current CSA-B149 Natural Gas and Propane Installation Codes in Canada for details.

Position termination according to location given in Figure 31 or Figure 32. In addition, position termination so it is free from any obstructions and 12” above the average snow accumulation.

At vent termination, care must be taken to maintain protective coatings over building materials (prolonged exposure to exhaust condensate can destroy protective coatings). It is recommended that the exhaust outlet not be located within 6 feet (1.8m) of an outdoor AC unit because the condensate can damage the painted coating.

***NOTE -** See TABLE 7 for maximum allowed exhaust pipe length without insulation in unconditioned space during winter design temperatures below 32°F (0°C). If required exhaust pipe should be insulated with 1/2” (13mm) Armaflex or equivalent. In extreme cold climate areas, 3/4” (19mm) Armaflex or equivalent may be necessary. Insulation must be protected from deterioration. Armaflex with UV protection is permissable. Basements or other enclosed areas that are not exposed to the outdoor ambient temperature and are above 32 degrees F (0°C) are to be considered conditioned spaces.*

⚠ IMPORTANT

Do not use screens or perforated metal in exhaust or intake terminations. Doing so will cause freeze-ups and may block the terminations.

⚠ IMPORTANT

For Canadian Installations Only:

In accordance to CSA International B149 installation codes, the minimum allowed distance between the combustion air intake inlet and the exhaust outlet of other appliances shall not be less than 12 inches (305mm).

TABLE 7

Maximum Allowable Exhaust Vent Pipe Length (in ft.[3]) Without Insulation In Unconditioned Space For Winter Design Temperatures Two - Stage High Efficiency Furnace

Winter Design Temperatures1 °F (°C)	Vent Pipe Diameter	Unit Input Size									
		045		070		090		110		135	
		PVC	[2]PP	PVC	[2]PP	PVC	[2]PP	PVC	[2]PP	PVC	[2]PP
32 to 21 (0 to -6)	1-1/2	22	n/a	25	n/a	n/a	n/a	n/a	n/a	n/a	n/a
	2 in	21	18	33	30	46	42	30	30	n/a	n/a
	2-1/2 in	16	n/a	26	n/a	37	n/a	36	n/a	n/a	n/a
	3 in	12	12	21	21	30	30	29	29	42	42
20 to 1 (-7 to -17)	1-1/2	12	n/a	20	n/a	n/a	n/a	n/a	n/a	n/a	n/a
	2 in	11	9	19	17	28	25	27	24	n/a	n/a
	2-1/2 in	7	n/a	14	n/a	21	n/a	20	n/a	n/a	n/a
	3 in	2	2	9	9	16	16	14	14	23	23
0 to -20 (-18 to -29)	1-1/2	8	n/a	13	n/a	n/a	n/a	n/a	n/a	n/a	n/a
	2 in	6	4	12	10	19	16	18	15	n/a	n/a
	2-1/2 in	1	n/a	7	n/a	13	n/a	12	n/a	n/a	n/a
	3 in	1	1	2	2	8	8	7	7	13	13

1Refer to 99% Minimum Design Temperature table provided in the current edition of the ASHRAE Fundamentals Handbook.

2 Poly-Propylene vent pipe (PP) by Duravent and Centrotherm.

3 Vent length in table is equivalent length. Consider each elbow as 5ft. of linear length

NOTE - Concentric terminations are the equivalent of 5' and should be considered when measuring pipe length.

NOTE - Maximum unisulated vent lengths listed may include the termination(vent pipe exterior to the structure) and cannot exceed 5 linear feet or the maximum allowable intake or exhaust vent length listed in TABLE 5 or TABLE 7 which ever is less.

NOTE - If insulation is required in an unconditioned space, it must be located on the pipe closest to the furnace. See Figure 30.

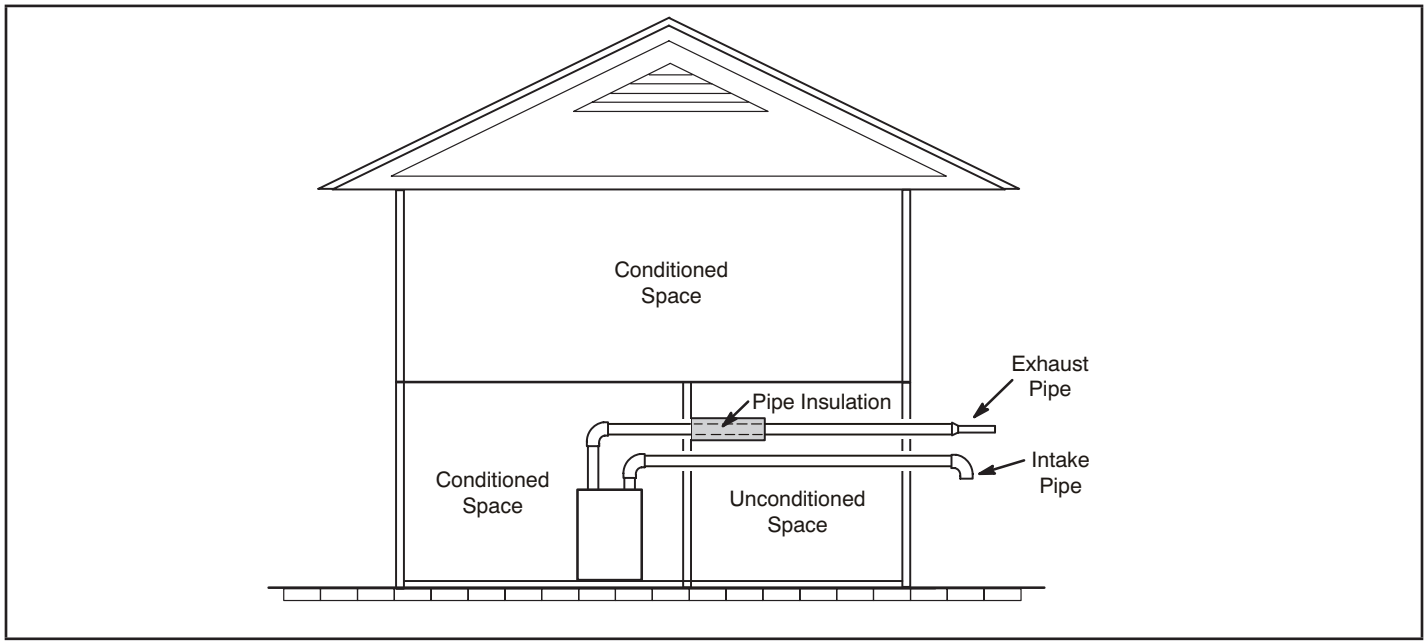

Figure 30

VENT TERMINATION CLEARANCES FOR NON-DIRECT VENT INSTALLATIONS IN THE USA AND CANADA

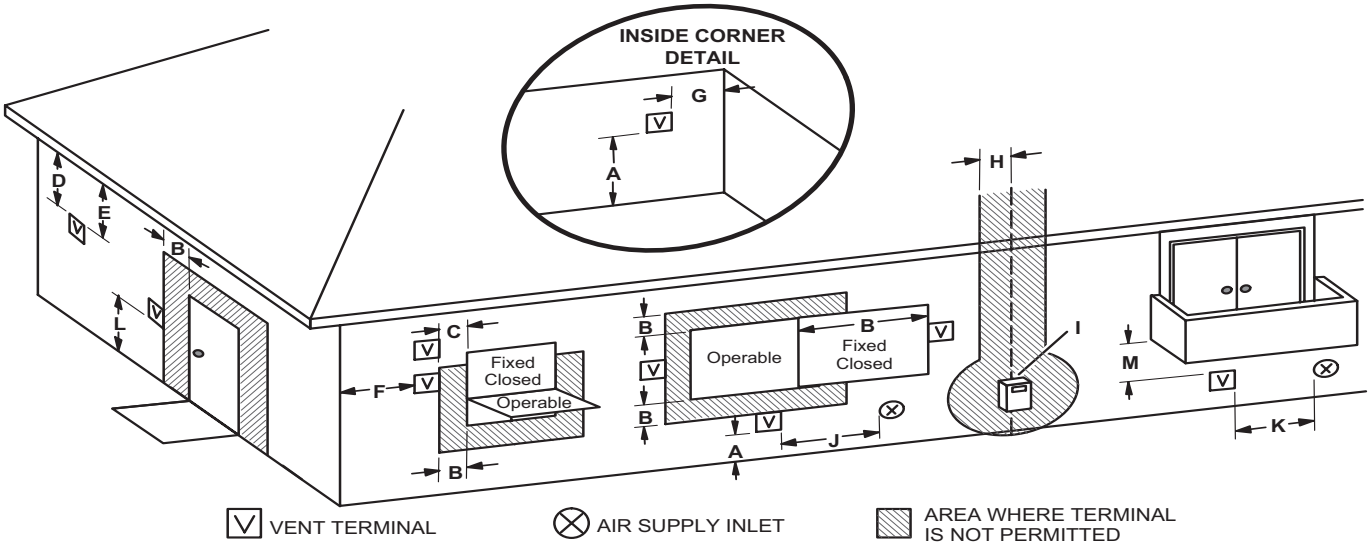

		US Installations[1]	Canadian Installations[2]
A =	Clearance above grade, veranda, porch, deck or balcony	12 inches (305mm) or 12 in. (305mm) above average snow accumulation.	12 inches (305mm) or 12 in. (305mm) above average snow accumulation.
B =	Clearance to window or door that may be opened	4 feet (1.2 m) below or to side of opening; 1 foot (30cm) above opening	6 inches (152mm) for appliances <10,000 Btuh (3kw), 12 inches (305mm) for appliances > 10,000 Btuh (3kw) and <100,000 Btuh (30kw), 36 inches (.9m) for appliances > 100,000 Btuh (30kw)
C =	Clearance to permanently closed window	* 12”	* 12”
D =	Vertical clearance to ventilated soffit located above the terminal within a horizontal distance of 2 feet (610 mm) from the center line of the terminal	* Equal to or greater than soffit depth.	* Equal to or greater than soffit depth.
E =	Clearance to unventilated soffit	* Equal to or greater than soffit depth.	* Equal to or greater than soffit depth.
F =	Clearance to outside corner	* No minimum to outside corner	* No minimum to outside corner
G =	Clearance to inside corner	*	*
H =	Clearance to each side of center line extended above meter / regulator assembly	* 3 feet (.9m) within a height 15 feet (4.5m) above the meter / regulator assembly	3 feet (.9m) within a height 15 feet (4.5m) above the meter / regulator assembly
I =	Clearance to service regulator vent outlet	* 3 feet (.9m)	3 feet (.9m)
J =	Clearance to non-mechanical air supply inlet to building or the combustion air inlet to any other appliance	4 feet (1.2 m) below or to side of opening; 1 foot (30 cm) above opening	6 inches (152mm) for appliances <10,000 Btuh (3kw), 12 inches (305mm) for appliances > 10,000 Btuh (3kw) and <100,000 Btuh (30kw), 36 inches (.9m) for appliances > 100,000 Btuh (30kw)
K =	Clearance to mechanical air supply inlet	3 feet (.9m) above if within 10 feet (3m) horizontally	6 feet (1.8m)
L =	Clearance above paved sidewalk or paved driveway located on public property	7 feet (2.1m)†	7 feet (2.1m)†
M =	Clearance under veranda, porch, deck or balcony	*12 inches (305mm)‡	12 inches (305mm)‡

[1] In accordance with the current ANSI Z223.1/NFPA 54 Natural Fuel Gas Code
[2] In accordance with the current CSA B149.1, Natural Gas and Propane Installation Code
† A vent shall not terminate directly above a sidewalk or paved driveway that is located between two single family dwellings and serves both dwellings.

‡ Permitted only if veranda, porch, deck or balcony is fully open on a minimum of two sides beneath the floor. Lennox recommends avoiding this location if possible.

*For clearances not specified in ANSI Z223.1/NFPA 54 or CSA B149.1, clearance will be in accordance with local installation codes and the requirements of the gas supplier and these installation instructions.”

NOTE - *This figure is intended to illustrate clearance requirement and does not serve as a substitute for locally adopted installation codes.*

Figure 31

VENT TERMINATION CLEARANCES FOR DIRECT VENT INSTALLATIONS IN THE US AND CANADA

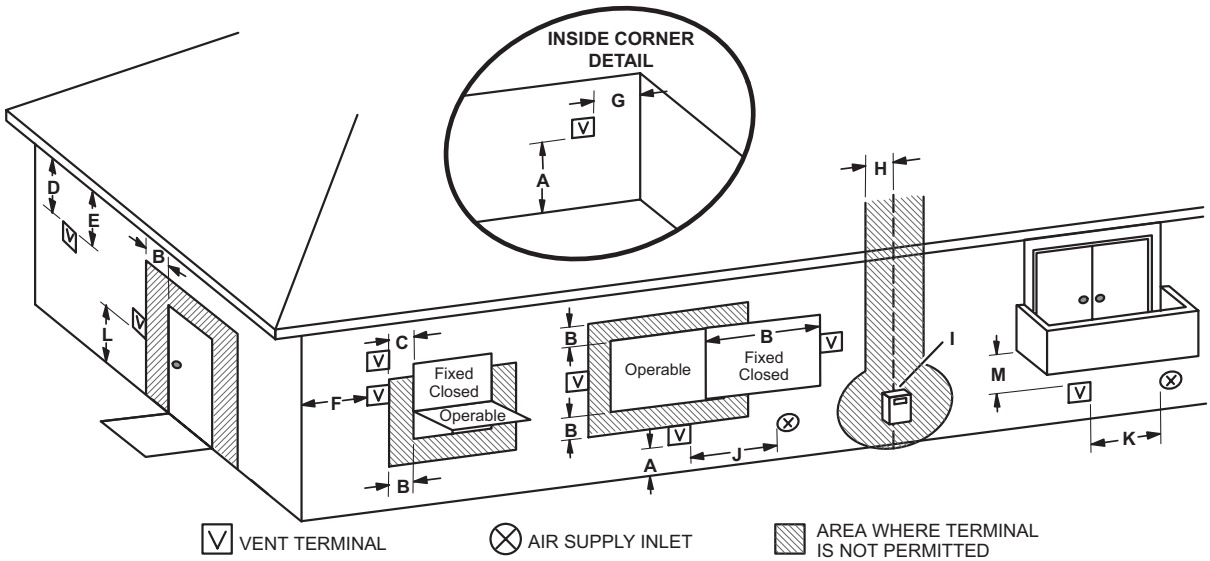

		US Installations[1]	Canadian Installations[2]
A =	Clearance above grade, veranda, porch, deck or balcony	12 inches (305mm) or 12 in. (305mm) above average snow accumulation.	12 inches (305mm) or 12 in. (305mm) above average snow accumulation.
B =	Clearance to window or door that may be opened	6 inches (152mm) for appliances <10,000 Btuh (3kw), 9 inches (228mm) for appliances > 10,000 Btuh (3kw) and <50,000 Btuh (15 kw), 12 inches (305mm) for appliances > 50,000 Btuh (15kw)	6 inches (152mm) for appliances <10,000 Btuh (3kw), 12 inches (305mm) for appliances > 10,000 Btuh (3kw) and <100,000 Btuh (30kw), 36 inches (.9m) for appliances > 100,000 Btuh (30kw)
C =	Clearance to permanently closed window	* 12”	* 12”
D =	Vertical clearance to ventilated soffit located above the terminal within a horizontal distance of 2 feet (610mm) from the center line of the terminal	* Equal to or greater than soffit depth	* Equal to or greater than soffit depth
E =	Clearance to unventilated soffit	* Equal to or greater than soffit depth	* Equal to or greater than soffit depth
F =	Clearance to outside corner	* No minimum to outside corner	* No minimum to outside corner
G =	Clearance to inside corner	*	*
H =	Clearance to each side of center line extended above meter / regulator assembly	3 feet (.9m) within a height 15 feet (4.5m) above the meter / regulator assembly	3 feet (.9m) within a height 15 feet (4.5m) above the meter / regulator assembly
I =	Clearance to service regulator vent outlet	* 3 feet (.9m)	3 feet (.9m)
J =	Clearance to non-mechanical air supply inlet to building or the combustion air inlet to any other appliance	6 inches (152mm) for appliances <10,000 Btuh (3kw), 9 inches (228mm) for appliances > 10,000 Btuh (3kw) and <50,000 Btuh (15 kw), 12 inches (305mm) for appliances > 50,000 Btuh (15kw)	6 inches (152mm) for appliances <10,000 Btuh (3kw), 12 inches (305mm) for appliances > 10,000 Btuh (3kw) and <100,000 Btuh (30kw), 36 inches (.9m) for appliances > 100,000 Btuh (30kw)
K =	Clearance to mechanical air supply inlet	3 feet (.9m) above if within 10 feet (3m) horizontally	6 feet (1.8m)
L =	Clearance above paved sidewalk or paved driveway located on public property	* 7 feet (2.1m)	7 feet (2.1m)†
M =	Clearance under veranda, porch, deck or balcony	*12 inches (305mm)‡	12 inches (305mm)‡

[1] In accordance with the current ANSI Z223.1/NFPA 54 Natural Fuel Gas Code

[2] In accordance with the current CSA B149.1, Natural Gas and Propane Installation Code

† A vent shall not terminate directly above a sidewalk or paved driveway that is located between two single family dwellings and serves both dwellings.

‡ Permitted only if veranda, porch, deck or balcony is fully open on a minimum of two sides beneath the floor. Lennox recommends avoiding this location if possible.

*For clearances not specified in ANSI Z223.1/NFPA 54 or CSA B149.1, clearance will be in accordance with local installation codes and the requirements of the gas supplier and these installation instructions.”

NOTE - *This figure is intended to illustrate clearance requirements and does not serve as a substitute for locally adopted installation codes.*

Figure 32

Details of Intake and Exhaust Piping Terminations for Direct Vent Installations

NOTE - *In Direct Vent installations, combustion air is taken from outdoors and flue gases are discharged to outdoors.*

NOTE - *Flue gas may be slightly acidic and may adversely affect some building materials. If any vent termination is used and the flue gasses may impinge on the building material, a corrosion-resistant shield (minimum 24 inches square) should be used to protect the wall surface. If the optional tee is used, the protective shield is recommended. The shield should be constructed using wood, plastic, sheet metal or other suitable material. All seams, joints, cracks, etc. in the affected area should be sealed using an appropriate sealant. See Figure 41.*

Intake and exhaust pipes may be routed either horizontally through an outside wall or vertically through the roof. In attic or closet installations, vertical termination through the roof is preferred. Figure 33 through Figure 40 show typical terminations.

1 - Intake and exhaust terminations are not required to be in the same pressure zone. You may exit the intake on one side of the structure and the exhaust on another side (Figure 34). You may exit the exhaust out the roof and the intake out the side of the structure (Figure 35).

2 - Intake and exhaust pipes should be placed as close together as possible at termination end (refer to illustrations). Maximum separation is 3" (76MM) on roof terminations and 6" (152MM) on side wall terminations.

NOTE - *When venting in different pressure zones, the maximum separation requirement of intake and exhaust pipe DOES NOT apply.*

3 - On roof terminations, the intake piping should terminate straight down using two 90° elbows (See Figure 33).

4 - Exhaust piping must terminate straight out or up as shown. A reducer may be required on the exhaust piping at the point where it exits the structure to improve the velocity of exhaust away from the intake piping. See TABLE 8.

NOTE - *Care must be taken to avoid recirculation of* exhaust back into intake pipe.

5 - On field-supplied terminations for side wall exit, exhaust piping may extend a maximum of 12 inches (305MM) for 2" PVC and 20 inches (508MM) for 3" (76MM) PVC beyond the outside wall. Intake piping should be as short as possible. See Figure 41.

6 - On field-supplied terminations, a minimum distance between the end of the exhaust pipe and the end of the intake pipe without a termination elbow is 8" and a minimum distance of 6" with a termination elbow. See Figure 41.

7 - If intake and exhaust piping must be run up a side wall to position above snow accumulation or other obstructions, piping must be supported. At least one bracket must be used within 6" from the top of the elbow and then every 24" (610mm) as shown in Figure 41, to prevent any movement in any direction. When exhaust and intake piping must be run up an outside wall, the exhaust piping must be terminated with pipe sized per table 8.The intake piping may be equipped with a 90° elbow turndown. Using turndown will add 5 feet (1.5m) to the equivalent length of the pipe.

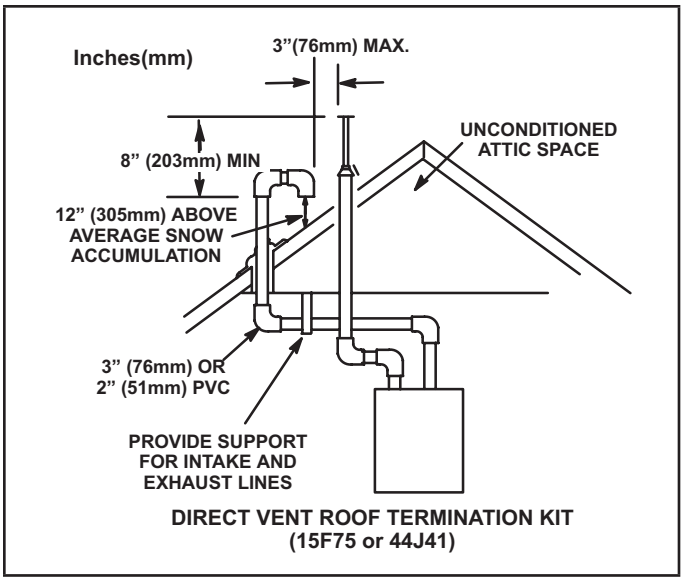

Figure 33

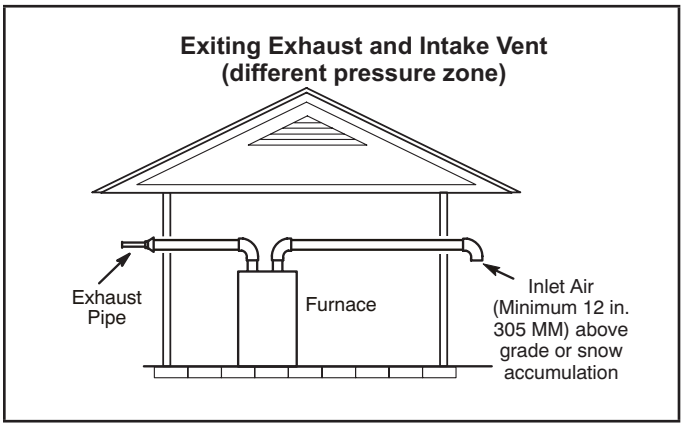

Figure 34

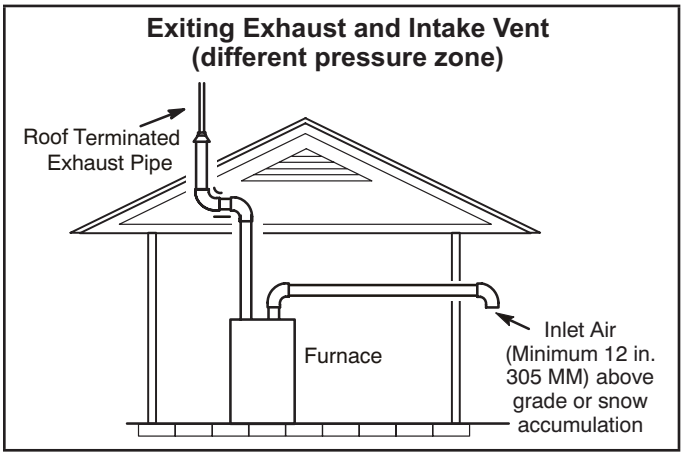

Figure 35

TABLE 8

EXHAUST PIPE TERMINATION SIZE REDUCTION

EL297UHVK MODEL	Termination Pipe Size
*045 and 070	1-1/2” (38MM)
*090	2” (51MM)
110	2” (51MM)
135	2” (51MM)
*EL297UHVK-045, -070 and -090 units with the flush mount termination must use the 1-1/2”accelerator supplied with the kit.	

8 - A multiple furnace installation may use a group of up to four terminations assembled together horizontally, as shown in Figure 39.

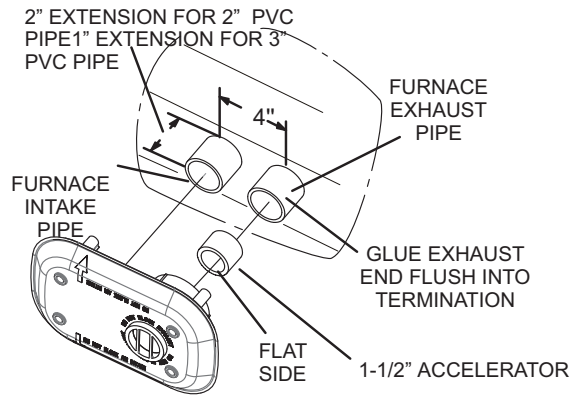

FLUSH-MOUNT SIDE WALL TERMINATION KIT
51W11 (US) or 51W12 (Canada)

Figure 36

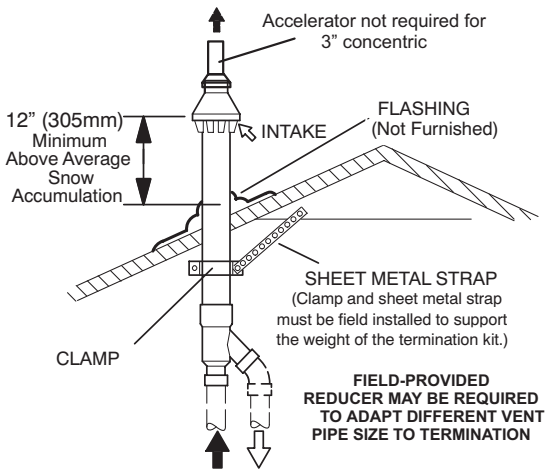

DIRECT VENT CONCENTRIC ROOFTOP TERMINATION
71M80, 69M29 or 60L46 (US)
44W92 or 44W93 (Canada)

Figure 37

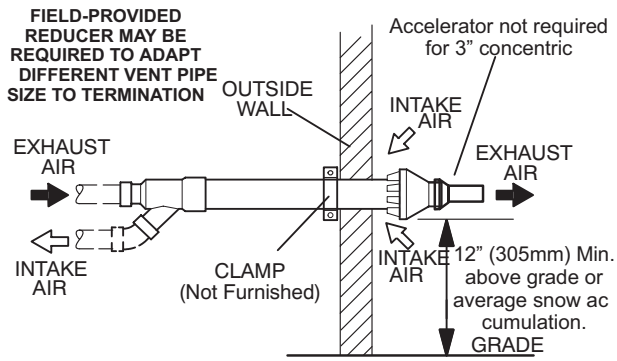

DIRECT VENT CONCENTRIC WALL TERMINATION
71M80, 69M29 or 60L46 (US)
44W92 or 44W93 (Canada)

Figure 38

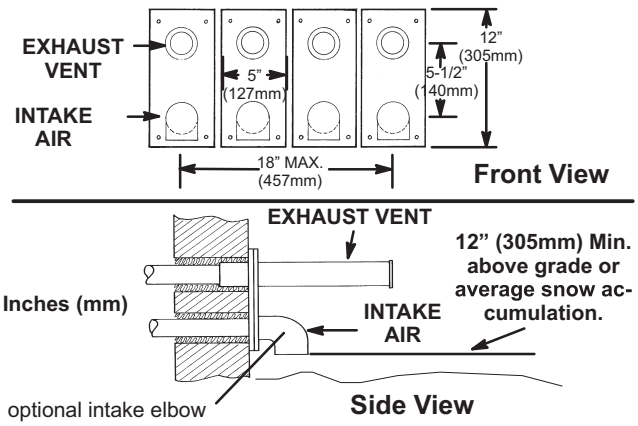

OPTIONAL VENT TERMINATION FOR MULTIPLE UNIT INSTALLATION OF DIRECT VENT WALL TERMINATION KIT (30G28 or 81J20)

Figure 39

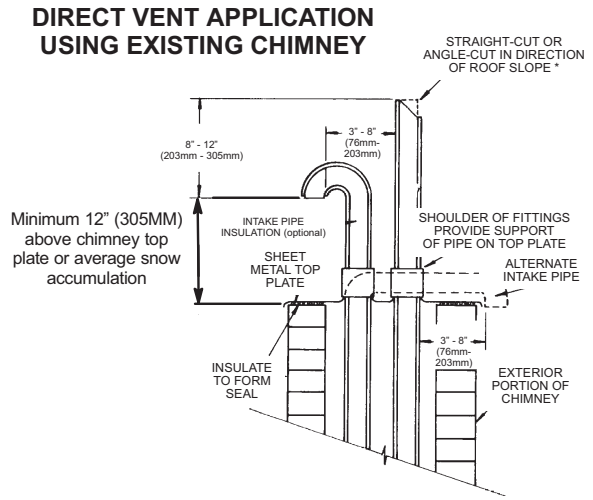

NOTE - Do not discharge exhaust gases directly into any chimney or vent stack. If vertical discharge through an existing unused chimney or stack is required, insert piping inside chimney until the pipe open end is above top of chimney and terminate as illustrated. In any exterior portion of chimney, the exhaust vent must be insulated.

Figure 40

FIELD FABRICATED WALL TERMINATION

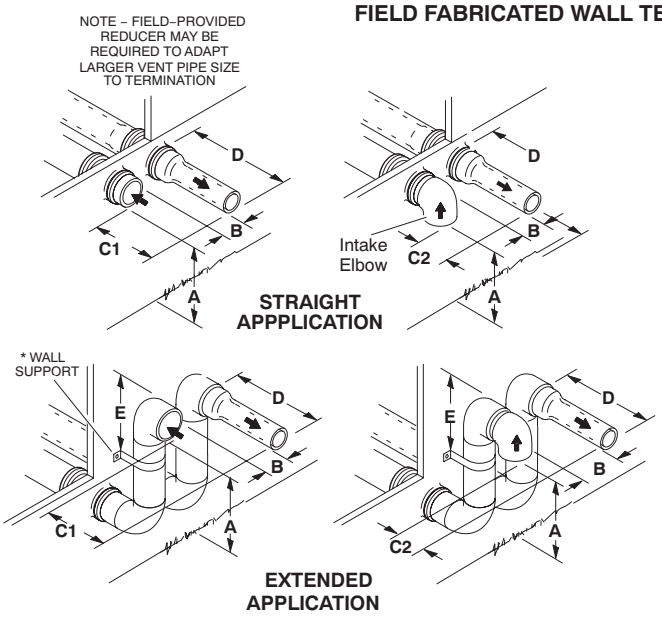

	2” (51mm) Vent Pipe	3” (76mm) Vent Pipe
A– Minimum clearance above grade or average snow accumulation	12” (305 mm)	12” (305 mm)
B– Maximum horizontal separation between intake and exhaust	6” (152 mm)	6” (152 mm)
C1 -Minimum from end of exhaust to inlet of intake	8” (203 mm)	8” (203 mm)
C2 -Minimum from end of exhaust to inlet of intake	6” (152 mm)	6” (152 mm)
D– Maximum exhaust pipe length	12” (305 mm)	20” (508 mm)
E– Maximum wall support distance from top of each pipe (intake/exhaust)	6” (152 mm)	6” (152 mm)

See maximum allowable venting tables for venting lengths with this arrangement.

* Use wall support every 24” (610 mm). Use two wall supports if extension is greater than 24” (610 mm) but less than 48” (1219 mm).

NOTE – One wall support must be within 6” (152 mm) from top of each pipe (intake and exhaust) to prevent movement in any direction.

ALTERNATE TERMINATIONS (TEE & FORTY–FIVE DEGREE ELBOWS ONLY)

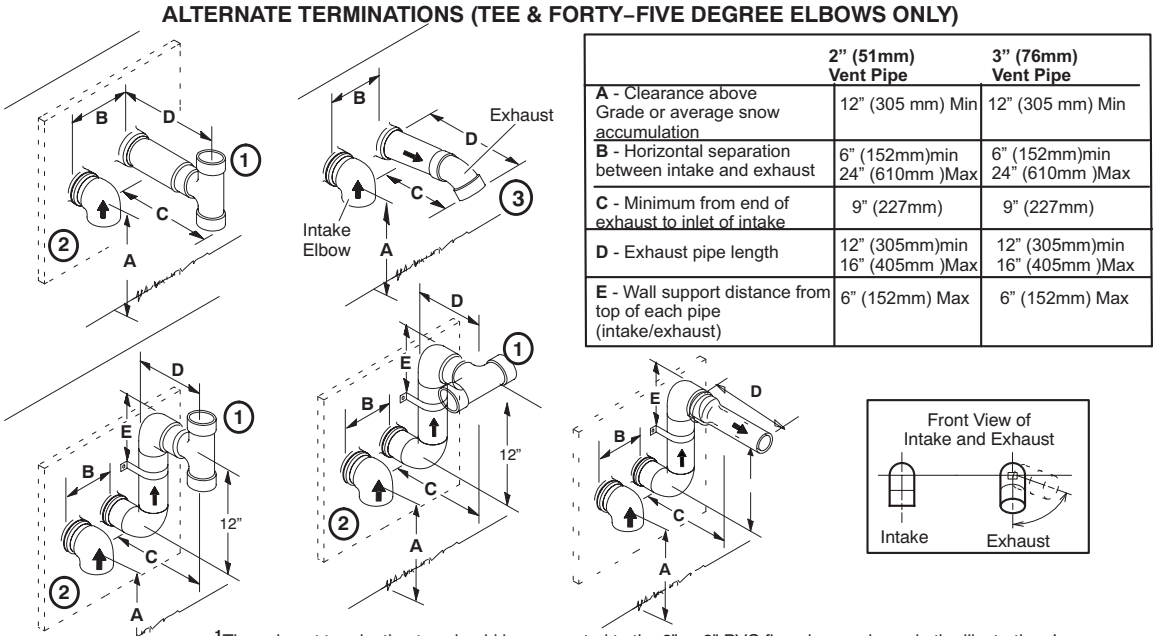

	2” (51mm) Vent Pipe	3” (76mm) Vent Pipe
A - Clearance above Grade or average snow accumulation	12” (305 mm) Min	12” (305 mm) Min
B - Horizontal separation between intake and exhaust	6” (152mm)min 24” (610mm)Max	6” (152mm)min 24” (610mm)Max
C - Minimum from end of exhaust to inlet of intake	9” (227mm)	9” (227mm)
D - Exhaust pipe length	12” (305mm)min 16” (405mm)Max	12” (305mm)min 16” (405mm)Max
E - Wall support distance from top of each pipe (intake/exhaust)	6” (152mm) Max	6” (152mm) Max

[1] The exhaust termination tee should be connected to the 2” or 3” PVC flue pipe as shown in the illustration. In horizontal tee applications there must be be a minimum of 3 ft away from covered patios or any living ares and cannot be within 3 ft of a window. Do not use an accelerator in applications that include an exhaust termination tee. The accelerator is not required.

[2] As required. Flue gas may be acidic and may adversely affect some building materials. If a side wall vent termination is used and flue gases will impinge on the building materials, a corrosion–resistant shield (24 inches square) should be used to protect the wall surface. If optional tee is used, the protective shield is recommended. The shield should be constructed using wood, sheet metal or other suitable material. All seams, joints, cracks, etc. in affected area, should be sealed using an appropriate sealant.

[3] Exhaust pipe 45° elbow can be rotated to the side away from the combustion air inlet to direct exhaust away from adjacent property. The exhaust must never be directed toward the combustion air inlet.

Figure 41

Details of Exhaust Piping Terminations for Non-Direct Vent Applications

Exhaust pipes may be routed either horizontally through an outside wall or vertically through the roof. In attic or closet installations, vertical termination through the roof is preferred. Figure 42 and Figure 43 show typical terminations.

1 - Exhaust piping must terminate straight out or up as shown. The termination pipe must be sized as listed in TABLE 8.The specified pipe size ensures proper velocity required to move the exhaust gases away from the building.

2 - On field supplied terminations for side wall exit, exhaust piping may extend a maximum of 12 inches (305MM) for 2” PVC and 20 inches (508MM) for 3” (76MM) PVC beyond the outside wall.

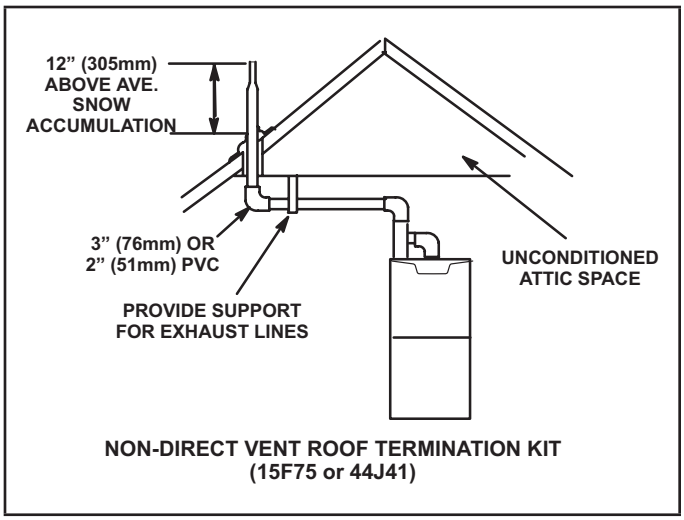

Figure 42

3 - If exhaust piping must be run up a side wall to position above snow accumulation or other obstructions, piping must be supported every 24 inches (610MM). When exhaust piping must be run up an outside wall, any reduction in exhaust pipe size must be done after the final elbow.

4 - Distance between exhaust pipe terminations on multiple furnaces must meet local codes.

Crawl Space and Extended Horizontal Venting

Lennox provides kit 51W18 (USA) and kit 15Z70 (Canada) to install 2” or 3” PVC exhaust piping through the floor joists and into the the crawl space. See Figure 44.

This kit can also be used as a supplemental drain for installations with condensate run back in the vent pipe (ie. long horizontal runs, unconditioned spaces, etc.).

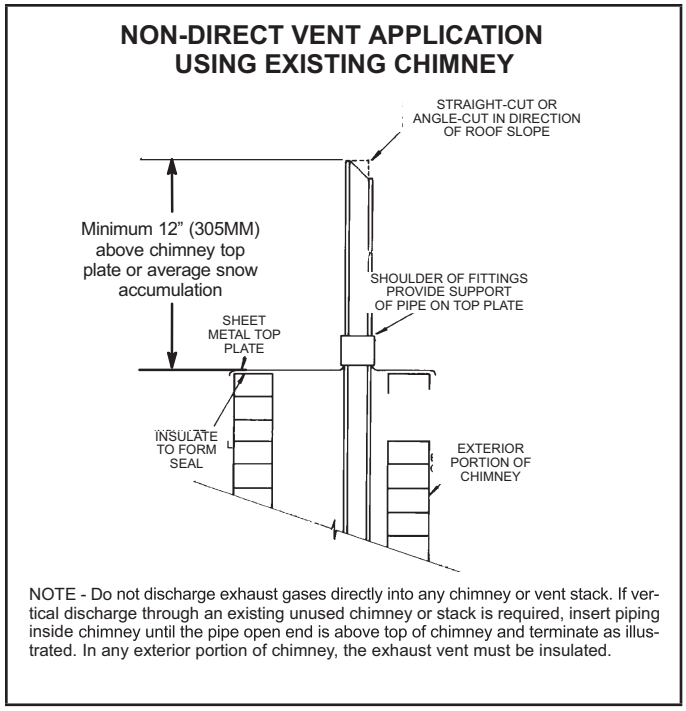

Figure 43

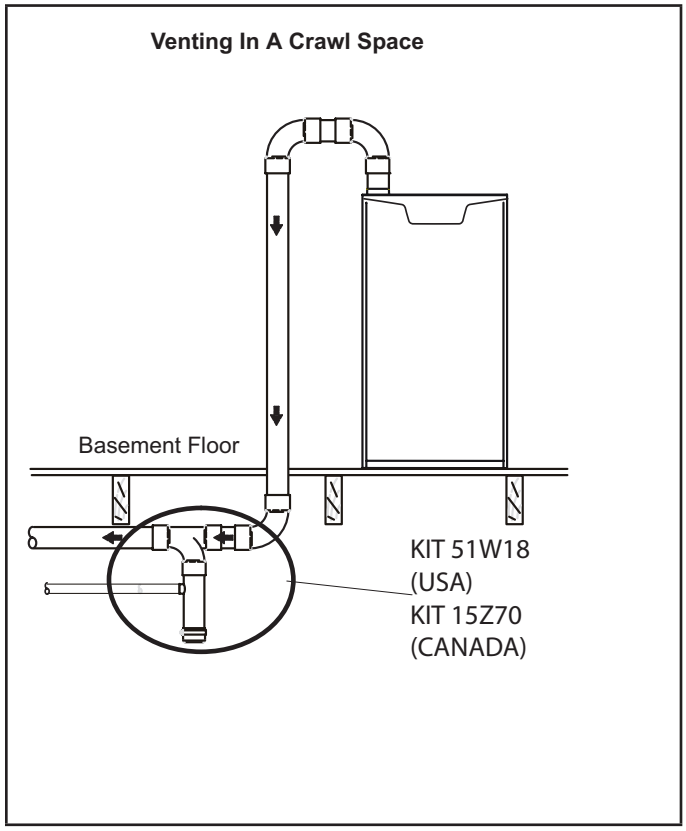

Figure 44

Condensate Piping

This unit is designed for either right- or left-side exit of condensate piping in upflow applications. In horizontal applications, the condensate trap must extend below the unit. An 8” service clearance is required for the condensate trap. Refer to Figure 45 and Figure 47 for condensate trap locations. Figure 53 shows trap assembly using 1/2” PVC or 3/4” PVC.

NOTE - *If necessary the condensate trap may be installed up to 5’ away from the furnace. Use PVC pipe to connect trap to furnace condensate outlet. Piping from furnace must slope down a minimum of 1/4” per ft. toward trap.*

1 - Determine which side condensate piping will exit the unit, location of trap, field-provided fittings and length of PVC pipe required to reach available drain.

2 - Use a large flat head screw driver or a 1/2” drive socket extension and remove plug (Figure 45) from the cold end header box at the appropriate location on the side of the unit. Install provided 3/4 NPT street elbow fitting into cold end header box. Use Teflon tape or appropriate pipe dope.

NOTE - *Cold end header box drain plugs are factory installed. Check the unused plug for tightness to prevent leakage.*

3 - Install the cap over the clean out opening at the base of the trap. Secure with clamp. See Figure 53.

4 - Install drain trap using appropriate PVC fittings, glue all joints. Glue the provided drain trap as shown in Figure 53. Route the condensate line to an open drain. Condensate line must maintain a 1/4” downward slope from the furnace to the drain.

5 - Figure 48 and Figure 49 show the furnace and evaporator coil using a separate drain. If necessary the condensate line from the furnace and evaporator coil can drain together. See Figure 50, Figure 51 and Figure 52. **Upflow furnace** (Figure 51) - In upflow furnace applications the field provided vent must be a minimum 1” to a maximum 2” length above the condensate drain outlet connection. Any length above 2” may result in a flooded heat exchanger if the combined primary drain line were to become restricted. **Horizontal furnace** (Figure 52) - In horizontal furnace applications the field provided vent must be a minimum 4” to a maximum 5” length above the condensate drain outlet connection. Any length above 5” may result in a flooded heat exchanger if the combined primary drain line were to become restricted.

CONDENSATE TRAP AND PLUG LOCATIONS
(Unit shown in upflow position)

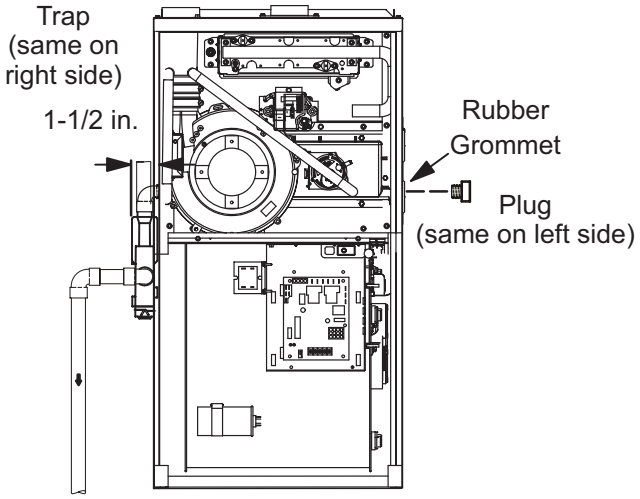

NOTE - In upflow applications where side return air filter is installed on same side as the condensate trap, filter rack must be installed beyond condensate trap or trap must be re-located to avoid interference.

Figure 45

NOTE - *In horizontal applications it is recommended to install a secondary drain pan underneath the unit and trap assembly.*

NOTE - *Appropriately sized tubing and barbed fitting may be used for condensate drain. Attach to the drain on the trap using a hose clamp. See Figure 46.*

Field Provided Drain Components

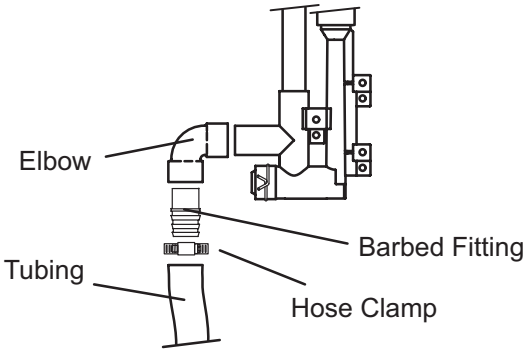

Figure 46

⚠ CAUTION

Do not use copper tubing or existing copper condensate lines for drain line.

6 - If unit will be started immediately upon completion of installation, prime trap per procedure outlined in Unit Start-Up section.

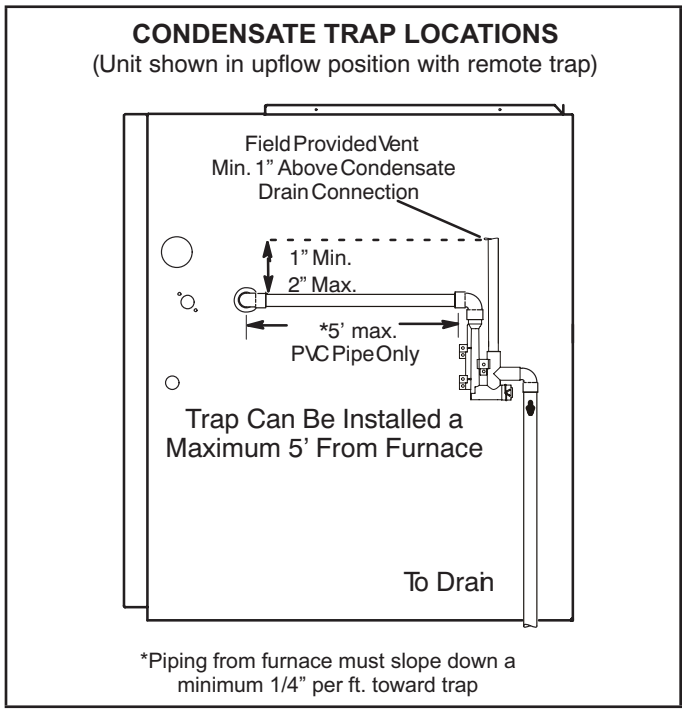

Figure 47

Condensate line must slope downward away from the trap to drain. If drain level is above condensate trap, condensate pump must be used. Condensate drain line should be routed within the conditioned space to avoid freezing of condensate and blockage of drain line. If this is not possible, a heat cable kit may be used on the condensate trap and line. Heating cable kit is available from Lennox in various lengths; 6 ft. (1.8m) - kit no. 26K68; 24 ft. (7.3m) - kit no. 26K69; and 50 ft. (15.2m) - kit no. 26K70.

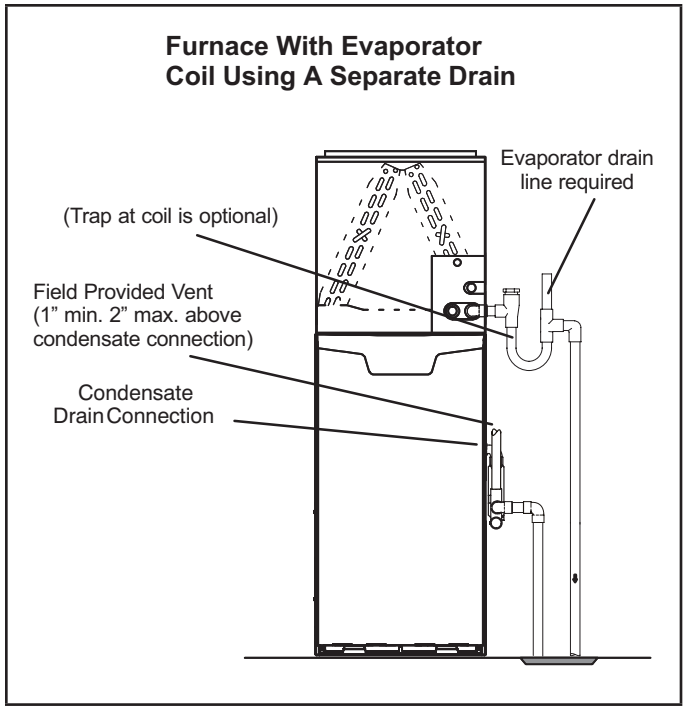

Figure 48

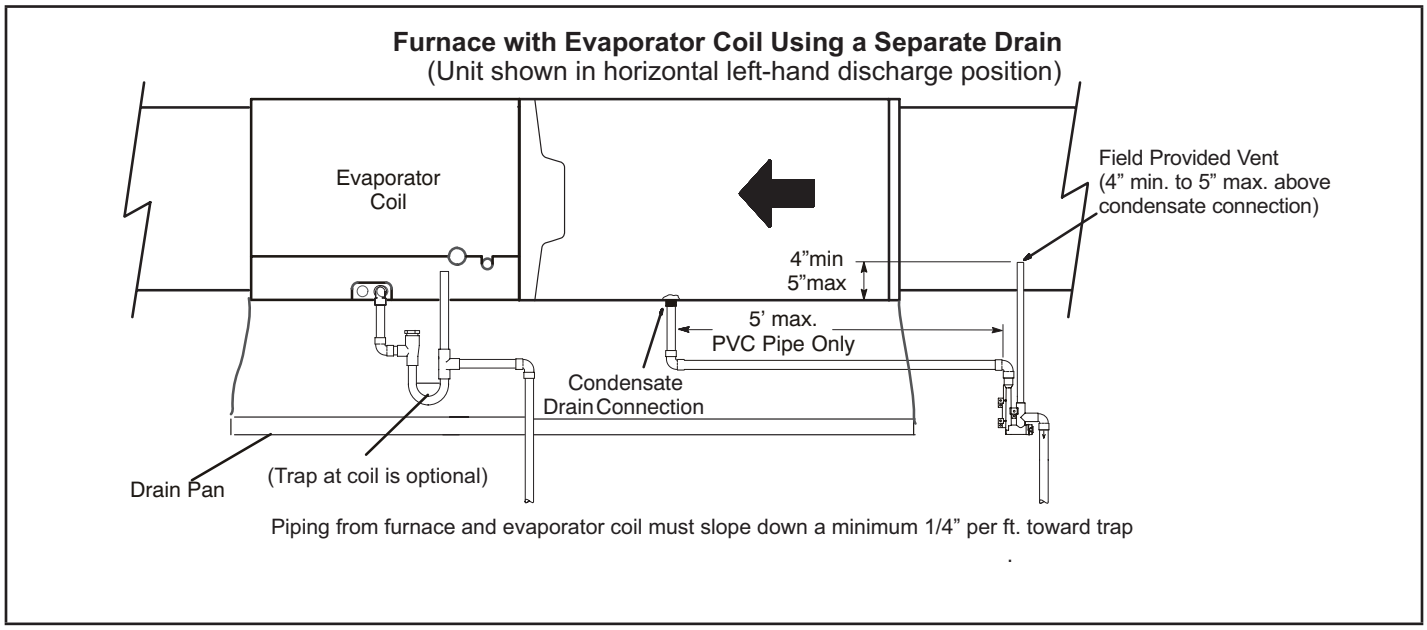

Figure 49

⚠ IMPORTANT

When combining the furnace and evaporator coil drains together, the A/C condensate drain outlet must be vented to relieve pressure in order for the furnace pressure switch to operate properly.

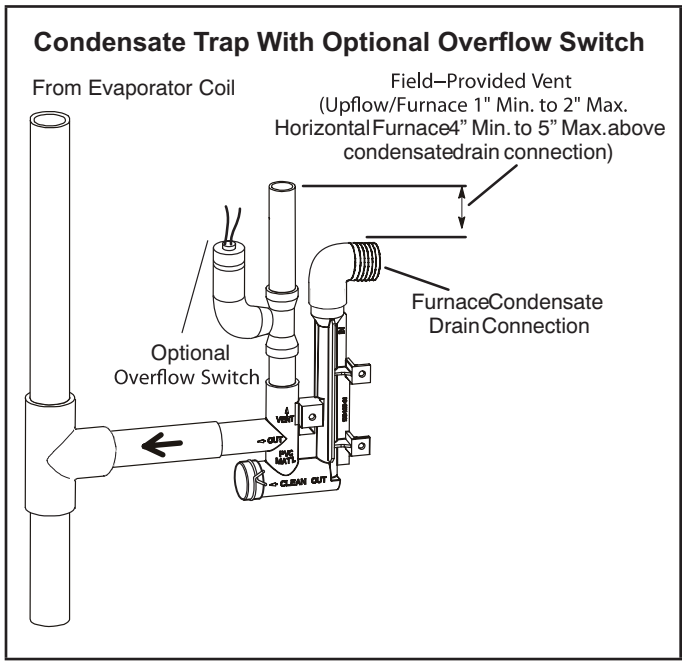

Figure 50

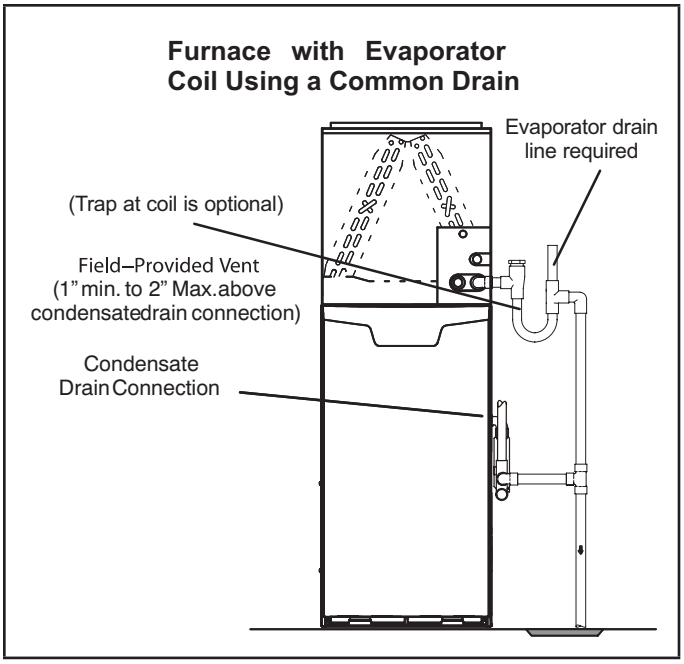

Figure 51

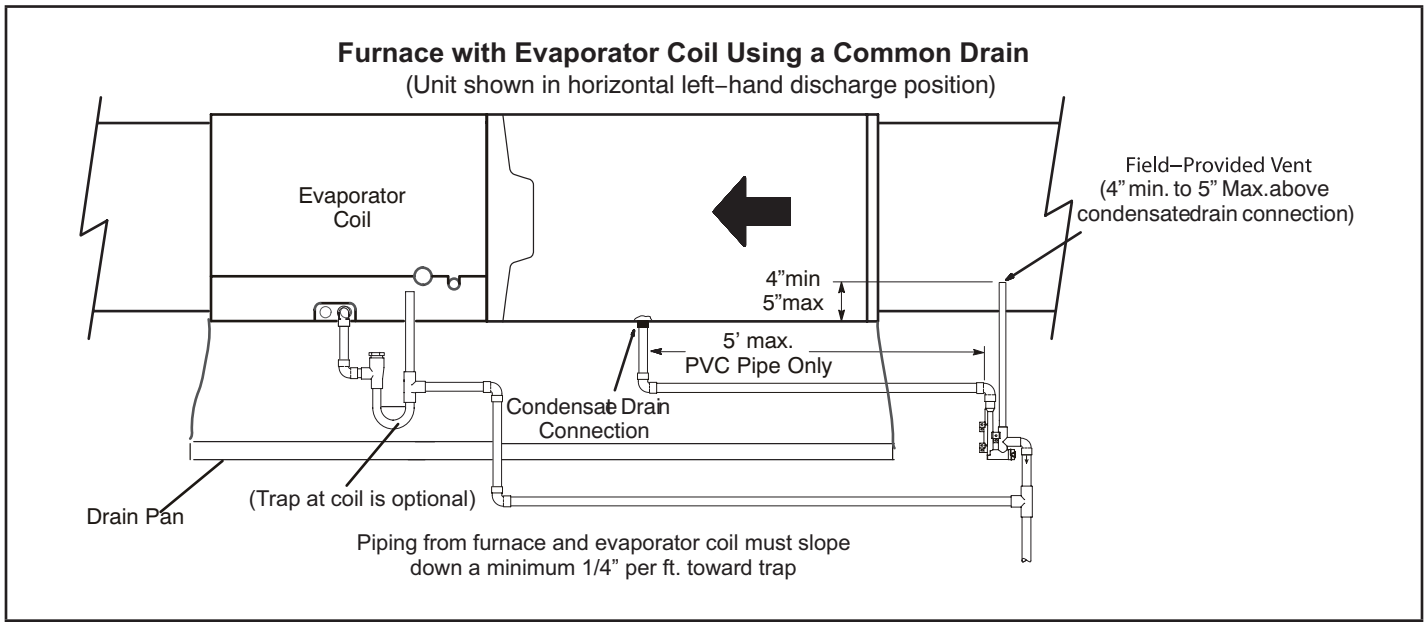

Figure 52

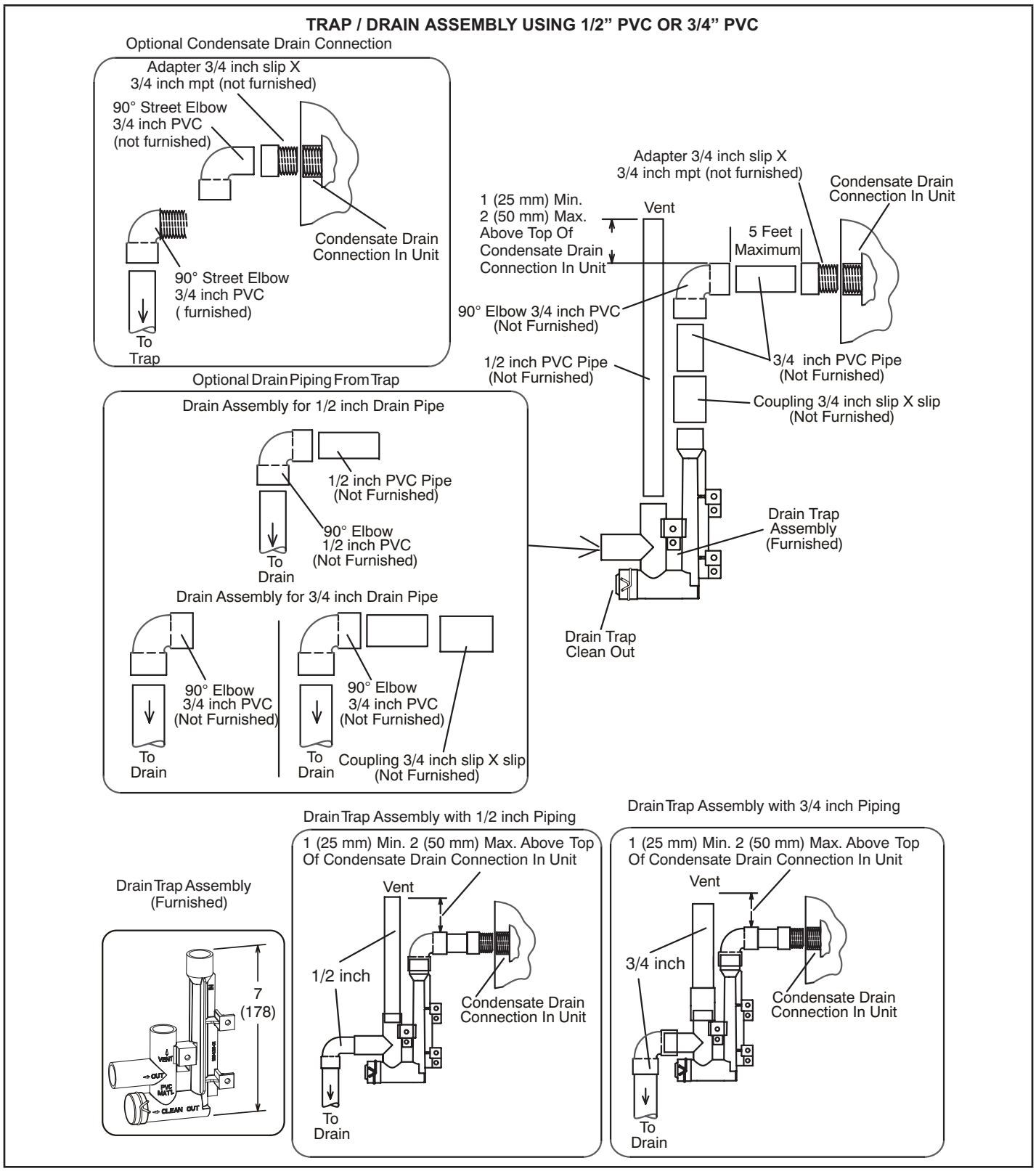
TRAP / DRAIN ASSEMBLY USING 1/2" PVC OR 3/4" PVC
Optional Condensate Drain Connection
Adapter 3/4 inch slip X
3/4 inch mpt (not furnished)
90° Street Elbow
3/4 inch PVC
(not furnished)
Condensate Drain
Connection In Unit
90° Street Elbow
3/4 inch PVC
(furnished)
To
Trap
Adapter 3/4 inch slip X
3/4 inch mpt (not furnished)
Condensate Drain
Connection In Unit
1 (25 mm) Min.
2 (50 mm) Max.
Above Top Of
Condensate Drain
Connection In Unit
Vent
5 Feet
Maximum
90° Elbow 3/4 inch PVC
(Not Furnished)
1/2 inch PVC Pipe
(Not Furnished)
3/4 inch PVC Pipe
(Not Furnished)
Coupling 3/4 inch slip X slip
(Not Furnished)
Optional Drain Piping From Trap
Drain Assembly for 1/2 inch Drain Pipe
1/2 inch PVC Pipe
(Not Furnished)
90° Elbow
1/2 inch PVC
(Not Furnished)
To
Drain
Drain Trap
Assembly
(Furnished)
Drain Assembly for 3/4 inch Drain Pipe
90° Elbow
3/4 inch PVC
(Not Furnished)
To
Drain
90° Elbow
3/4 inch PVC
(Not Furnished)
To
Drain
Coupling 3/4 inch slip X slip
(Not Furnished)
Drain Trap
Clean Out
Drain Trap Assembly
(Furnished)
7
(178)
VENT
OUT
PVC
MATL
CLEAN OUT
Drain Trap Assembly with 1/2 inch Piping
1 (25 mm) Min. 2 (50 mm) Max. Above Top
Of Condensate Drain Connection In Unit
Vent
1/2 inch
Condensate Drain
Connection In Unit
To
Drain
Drain Trap Assembly with 3/4 inch Piping
1 (25 mm) Min. 2 (50 mm) Max. Above Top
Of Condensate Drain Connection In Unit
Vent
3/4 inch
Condensate Drain
Connection In Unit
To
Drain

Figure 53

Gas Piping

Gas supply piping should not allow more than 0.5”W.C. drop in pressure between gas meter and unit. Supply gas pipe must not be smaller than unit gas connection.

⚠ CAUTION

If a flexible gas connector is required or allowed by the authority that has jurisdiction, black iron pipe shall be installed at the gas valve and extend outside the furnace cabinet. The flexible connector can then be added between the black iron pipe and the gas supply line.

⚠ WARNING

Do not over torque (800 in-lbs) or under torque (350 in-lbs) when attaching the gas piping to the gas valve.

1 - Gas piping may be routed into the unit through either the left- or right-hand side. Supply piping enters into the gas valve from the side of the valve as shown in figure 55. Connect the gas supply piping into the gas valve. The maximum torque is 800 in lbs and minimum torque is 350 in lbs when when attaching the gas piping to the gas valve.

2 - When connecting gas supply, factors such as length of run, number of fittings and furnace rating must be considered to avoid excessive pressure drop. TABLE 9 lists recommended pipe sizes for typical applications.

NOTE - *Use two wrenches when connecting gas piping to avoid transferring torque to the manifold.*

3 - Gas piping must not run in or through air ducts, clothes chutes, chimneys or gas vents, dumb waiters or elevator shafts. Center gas line through piping hole. Gas line should not touch side of unit. See Figure 55 and Figure 56.

4 - Piping should be sloped 1/4 inch per 15 feet (6mm per 5.6m) upward toward the gas meter from the furnace. The piping must be supported at proper intervals, every 8 to 10 feet (2.44 to 3.05m), using suitable hangers or straps. Install a drip leg in vertical pipe runs to serve as a trap for sediment or condensate.

5 - A 1/8” N.P.T. plugged tap or pressure post is located on the gas valve to facilitate test gauge connection. See Figure 67.

6 - In some localities, codes may require installation of a manual main shut-off valve and union (furnished by installer) external to the unit. Union must be of the ground joint type.

⚠ IMPORTANT

Compounds used on threaded joints of gas piping must be resistant to the actions of liquified petroleum gases.

Leak Check

After gas piping is completed, carefully check all field-installed piping connections for gas leaks. Use a commercially available leak detecting solution specifically manufactured for leak detection. Never use an open flame to test for gas leaks.

The furnace must be isolated from the gas supply system by closing the individual manual shut-off valve during any gas supply system at pressures greater than or equal to ½ psig. (3.48 kPa, 14 inches w.c.). This furnace and its components are designed, manufactured and independently certified to comply with all applicable ANSI/CSA standards. A leak check of the furnace and its components is not required.

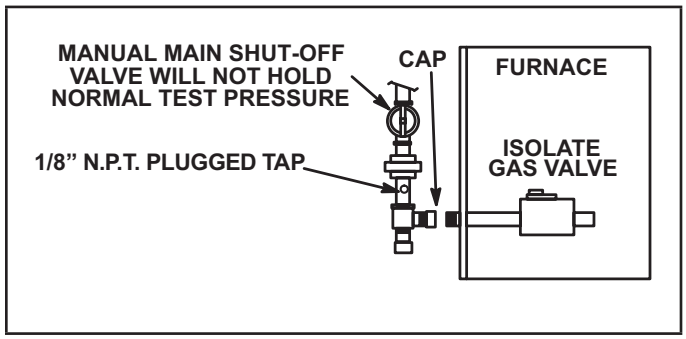

Figure 54

⚠ IMPORTANT

When testing pressure of gas lines, gas valve must be disconnected and isolated. See Figure 54. Gas valves can be damaged if subjected to pressures greater than 1/2 psig (3.48 kPa).

⚠ WARNING

FIRE OR EXPLOSION HAZARD

Failure to follow the safety warnings exactly could result in serious injury, death, or property damage. Never use an open flame to test for gas leaks. Check all connections using a commercially available soap solution made specifically for leak detection. Some soaps used for leak detection are corrosive to certain metals. Carefully rinse piping thoroughly after leak test has been completed.

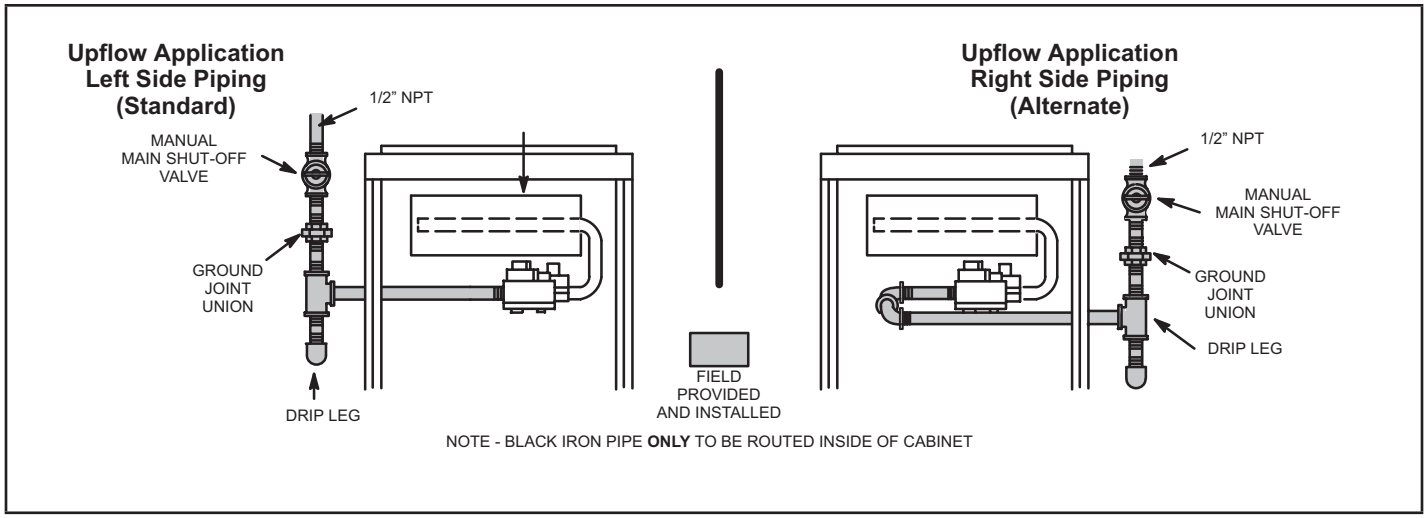

Figure 55

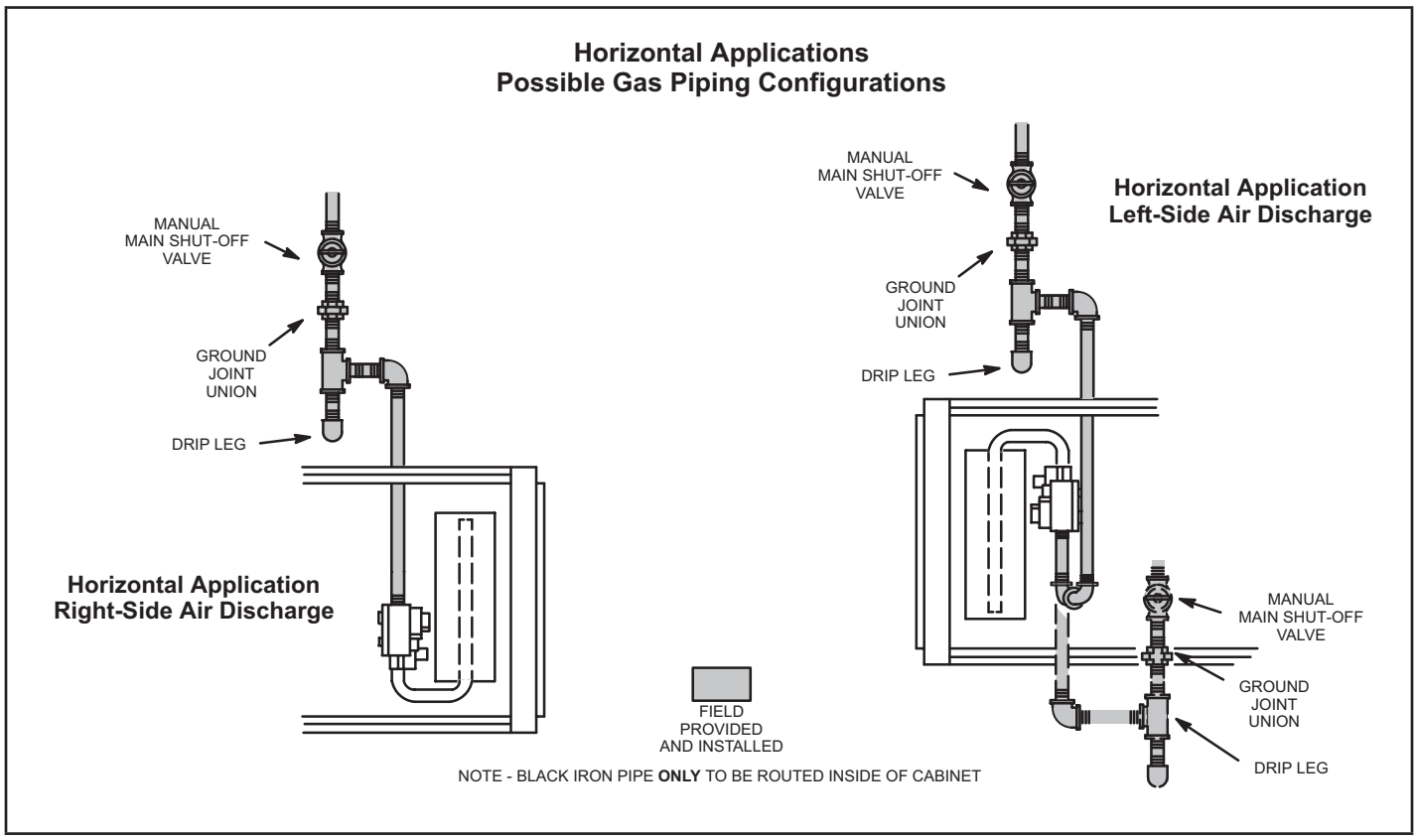

Figure 56

TABLE 9

Gas Pipe Capacity - ft3/hr (m3/hr)

Nominal Iron Pipe Size Inches (mm)	Internal Diameter inches (mm)	Length of Pipe - feet (m)									
		10 (3.048)	20 (6.096)	30 (9,144)	40 (12,192)	50 (15.240)	60 (18.288)	70 (21.336)	80 (24.384)	90 (27.432)	100 (30,480)
1/2 (12.7)	.622 (17.799)	172 (4.87)	118 (3.34)	95 (2.69)	81 (2.29)	72 (2.03)	65 (1.84)	60 (1.69)	56 (1.58)	52 (1.47)	50 (1.42)
3/4 (19.05)	.824 (20.930)	360 (10.19)	247 (7.000)	199 (5.63)	170 (4.81)	151 (4.23)	137 (3.87)	126 (3.56)	117 (3.31)	110 (3.11)	104 (2.94)
1 (25.4)	1.049 (26.645)	678 (19.19)	466 (13.19)	374 (10.59)	320 (9.06)	284 (8.04)	257 (7.27)	237 (6.71)	220 (6.23)	207 (5.86)	195 (5.52)
1-1/4 (31.75)	1.380 (35.052)	1350 (38.22)	957 (27.09)	768 (22.25)	657 (18.60)	583 (16.50)	528 (14.95)	486 (13.76)	452 (12.79)	424 (12.00)	400 (11.33)
1-1/2 (38.1)	1.610 (40.894)	2090 (59.18)	1430 (40.49)	1150 (32.56)	985 (27.89)	873 (24.72)	791 (22.39)	728 (20.61)	677 (19.17)	635 (17.98)	600 (17.00)
2 (50.8)	2.067 (52.502)	4020 (113.83)	2760 (78.15)	2220 (62.86)	1900 (53.80)	1680 (47.57)	1520 (43.04)	1400 (39.64)	1300 (36.81)	1220 (34.55)	1160 (32.844)
2-1/2 (63.5)	2.469 (67.713)	6400 (181.22)	4400 (124.59)	3530 (99.95)	3020 (85.51)	2680 (75.88)	2480 (70.22)	2230 (63.14)	2080 (58.89)	1950 (55.22)	1840 (52.10)
3 (76.2)	3.068 (77.927)	11300 (319.98)	7780 (220.30)	6250 (176.98)	5350 (151.49)	4740 (134.22)	4290 (121.47)	3950 (111.85)	3670 (103.92)	3450 (97.69)	3260 (92.31)

NOTE - *Capacity given in cubic feet (m3) of gas per hour and based on 0.60 specific gravity gas.*

Electrical

ELECTROSTATIC DISCHARGE (ESD)
Precautions and Procedures

⚠ CAUTION

Electrostatic discharge can affect electronic components. Take precautions to neutralize electrostatic charge by touching your hand and tools to metal prior to handling the control.

⚠ WARNING

Electric Shock Hazard. Can cause injury or death. Unit must be properly grounded in accordance with national and local codes.

⚠ WARNING

Fire Hazard. Use of aluminum wire with this product may result in a fire, causing property damage, severe injury or death. Use copper wire only with this product.

The unit is equipped with a field make-up box on the left hand side of the cabinet. The make-up box may be moved to the right side of the furnace to facilitate installation. If the make-up box is moved to the right side, clip the wire ties that bundle the wires together. The excess wire must be pulled into the blower compartment. Secure the excess wire to the existing harness to protect it from damage.

INTERIOR MAKE-UP BOX INSTALLATION

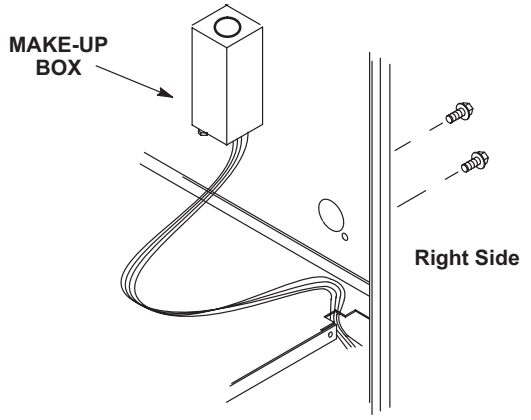

Figure 57

Refer to Figure 61 for unit schematic and field wiring. See Figure 58 and Figure 59 for wiring in communicating applications. TABLE 11 shows DIP switch and on-board link settings for non-communicating thermostat applications. Typical wiring schematic is shown in Figure 61, 61, 62 and 63.

The power supply wiring must meet Class I restrictions. Protected by either a fuse or circuit breaker, select circuit protection and wire size according to unit nameplate.

⚠ CAUTION

Failure to use properly sized wiring and circuit breaker may result in property damage. Size wiring and circuit breaker(s) per Product Specifications bulletin (EHB) and unit rating plate.

NOTE - *Unit nameplate states maximum current draw. Maximum over-current protection allowed is shown in TABLE 10.*

TABLE 10

EL297UHVK	Maximum Over-Current
045V36B, 070V36B, 090V36C, 090V48C, 110V48C	15
090V60C, 110V60C, 135V60D	20

Holes are on both sides of the furnace cabinet to facilitate wiring.

Install a separate (properly sized) disconnect switch near the furnace so that power can be turned off for servicing. Before connecting the thermostat or the power wiring, check to make sure the wires will be long enough for servicing at a later date. Remove the blower access panel to check the length of the wire.

Complete the wiring connections to the equipment. Use the provided unit wiring diagram. See Figure 61 and Figure 62. Field wiring diagrams begin on page 44. Use 18-gauge wire or larger that is suitable for Class II rating for thermostat connections.

Electrically ground the unit according to local codes or, in the absence of local codes, according to the current National Electric Code (ANSI/NFPA No. 70). A green ground wire is provided in the field make-up box. NOTE - The EL297UHVK furnace contains electronic components that are polarity sensitive. Make sure that the furnace is wired correctly and is properly grounded.

One line voltage “ACC” 1/4” spade terminal is provided on the furnace integrated control. Any electronic air cleaner or other accessory rated up to one amp can be connected to this terminal with the neutral leg of the circuit being connected to the one of the provided neutral terminals. See Figure 63 for control configuration. This terminal is energized when the indoor blower is operating.

⚠ IMPORTANT

When matching this gas furnace with zoning, dual fuel or other 24V accessories, It is recommended to replace the factory installed transformer with kit 27J32.

Kit 27J32 contains a 75VA transformer, so you do not overload the original 40VA transformer.

An unpowered, normally open (dry) set of contacts with a 1/4" spade terminal "HUM" are provided for humidifier connections and may be connected to 24V or 120V. Any humidifier rated up to one amp can be connected to these terminals. In 120V humidifier applications the neutral leg of the circuit can be connected to one of the provided neutral terminals. This terminal is energized in the heating mode.

Install the room thermostat according to the instructions provided with the thermostat. See for field wiring connections in varying applications. If the furnace is being matched with a heat pump, refer to the instruction packaged with the dual fuel thermostat.

Thermostat Selection

⚠ CAUTION

Field wiring for both communicating and non-communicating applications is illustrated in diagrams, which begin on the next page.

Non-Communicating

In non-communicating applications the EL297UHVK is designed to operate in a SINGLE-STAGE mode or TWOSTAGE mode using a conventional thermostat.

For optimal performance in non-communicating applications, Lennox recommends use of a ComfortSense® 7000 high quality electronic digital thermostat or any other with adjustable settings for 1st stage / 2nd stage on / off differentials and adjustable stage timers.

Communicating

In communicating applications a communicating thermostat must be used. Refer to the instructions provided with the thermostat for installation, set-up and operation. In communicating system all unused thermostat wire in the wire bundle needs to be terminated inside and out. The extra wires can terminate on the 'C" terminal of the terminal strip. (RSBus). Using an additional wire come off "C" terminal and wire nut all the extra wires together. Termination on the outdoor control must match the indoor control.

Indoor Blower Speeds

Non-Communicating

When the thermostat is set to "FAN ON," the indoor blower will run continuously at a field selectable percentage of the second-stage cooling speed when there is no cooling or heating demand. The factory default setting is 38% of cool speed. When the EL297UHVK is running in the heating mode,the indoor blower will run on the heating speed designated by the positions of DIP switches 11, 12 and 13. When there is a cooling demand, the indoor blower will run on the cooling speed designated by the positions of DIP switches 5 and 6. First stage cooling will run at 70% cool speed.

Communicating

NOTE - When the EL297UHVK is used with a communicating thermostat, proper indoor blower speed selections are made by the thermostat.

When the thermostat is set to "FAN ON," the indoor blower will run at setting determined during system configuration. See TABLE 32 on page 75 for allowable circulation speeds.

When there is a heating demand the fan will run on heating speeds for firing rate. When there is a cooling demand, the fan will run on the first stage and second stage cooling speed set using the thermostat in the installer setup mode. The factory default is based upon 400 CFM a ton.

Generator Use - Voltage Requirements

The following requirements must be kept in mind when specifying a generator for use with this equipment:

- The furnace requires 120 volts (Range: 102 volts to 132 volts)
- The furnace operates at 60 Hz + 5% (Range: 57 Hz to 63 Hz)
- The furnace integrated control requires both correct polarity and proper ground. Both polarity and proper grounding should be checked before attempting to operate the furnace on either permanent or temporary power
- Generator should have a wave form distortion of less than 5% THD (total harmonic distortion)

Communicating Enabled Furnace with a Non-Communicating Outdoor Unit

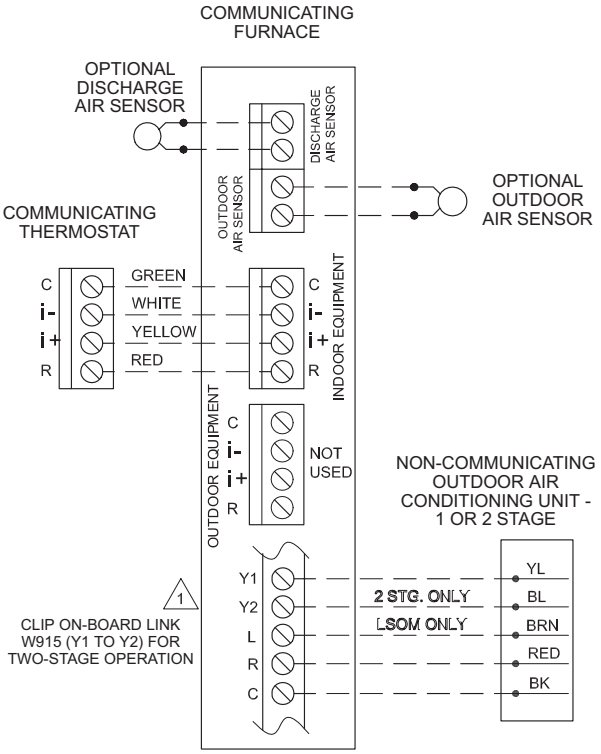

Communicating Enabled Furnace with a Communicating Enabled Outdoor Unit

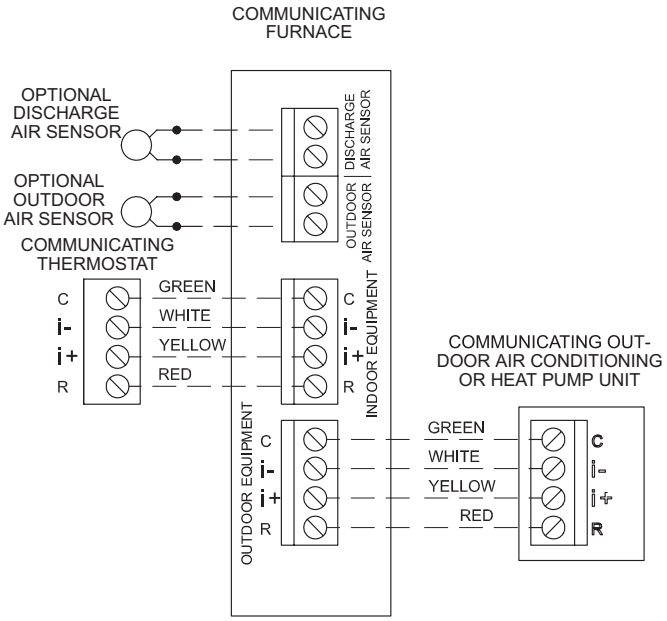

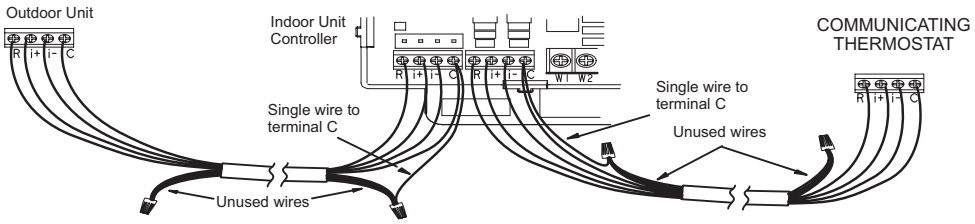

Communicating systems using the Communicating thermostat require four thermostat wires between the thermostat and the furnace/air handler control and four wires between the outdoor unit and the furnace/air handler control. When a thermostat cable with more than four wires is used, the extra wires must be properly connected to avoid electrical noise. The wires must not be left disconnected.

Use wire nuts to bundle the four unused wires at each end of the cable. A single wire should then be connected to the indoor unit end of the wire bundle and attached to the “C” terminals as shown above.

Figure 58

Optional Accessories for use with any Communicating System

NOTE: ICOMMUNICATING THERMOSTAT SENSES HUMIDITY & CONTROLS HUM CONTACTS TO CYCLE HUMIDIFIER BASED ON DEMAND. NO OTHER CONTROL OR HUMIDISTAT REQUIRED.

OPTIONAL OUTDOOR AIR SENSOR FOR USE WITH HUMIDIFIER (IF NOT ALREADY IN THE SYSTEM FOR OTHER FUNCTIONS. BUILT INTO ALL COMMUNICATING ENABLED OUT DOOR UNITS).

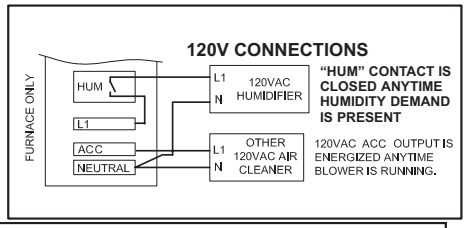

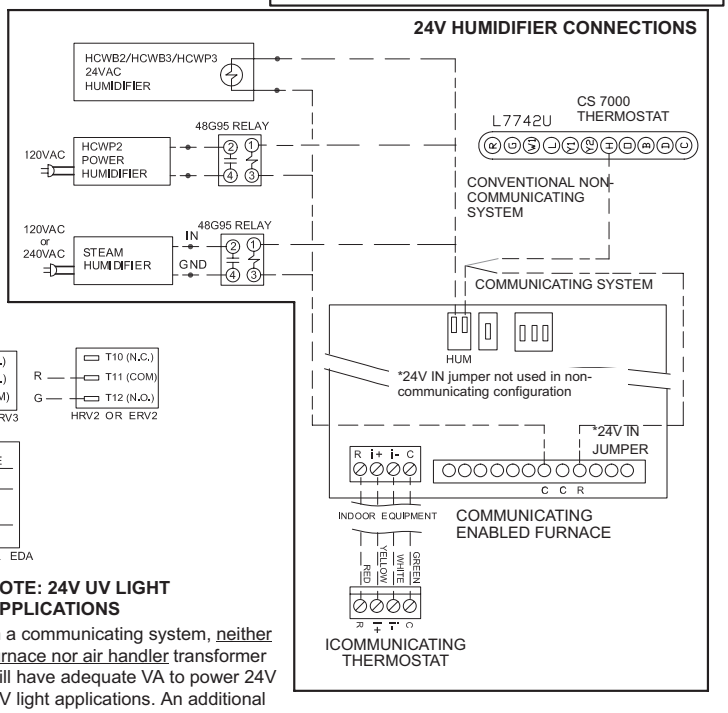

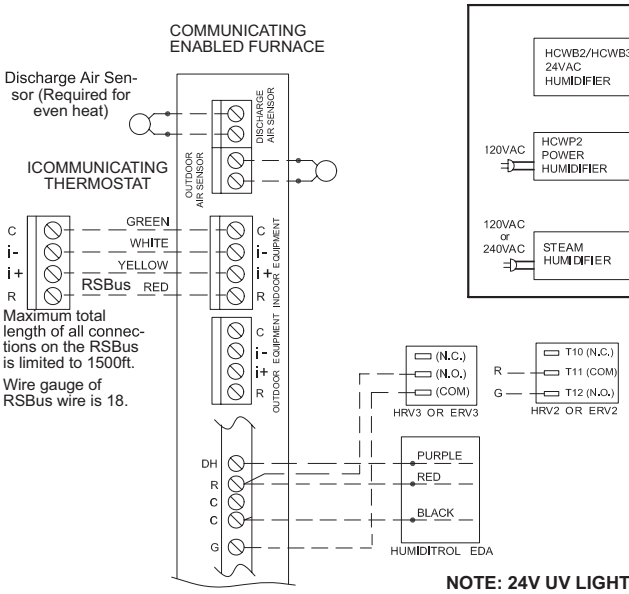

NOTE: 24V UV LIGHT APPLICATIONS

In a communicating system, neither furnace nor air handler transformer will have adequate VA to power 24V UV light applications. An additional transformer for UV light applications is required.

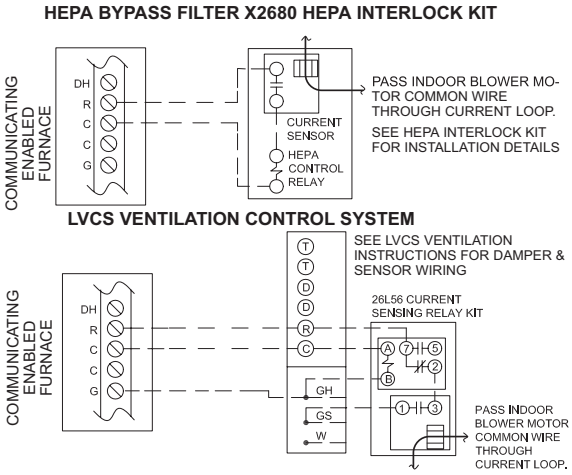

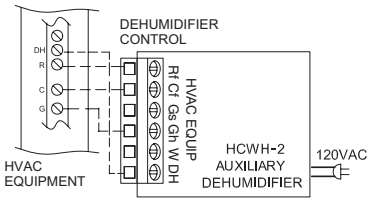

Figure 59

Communicating Wiring

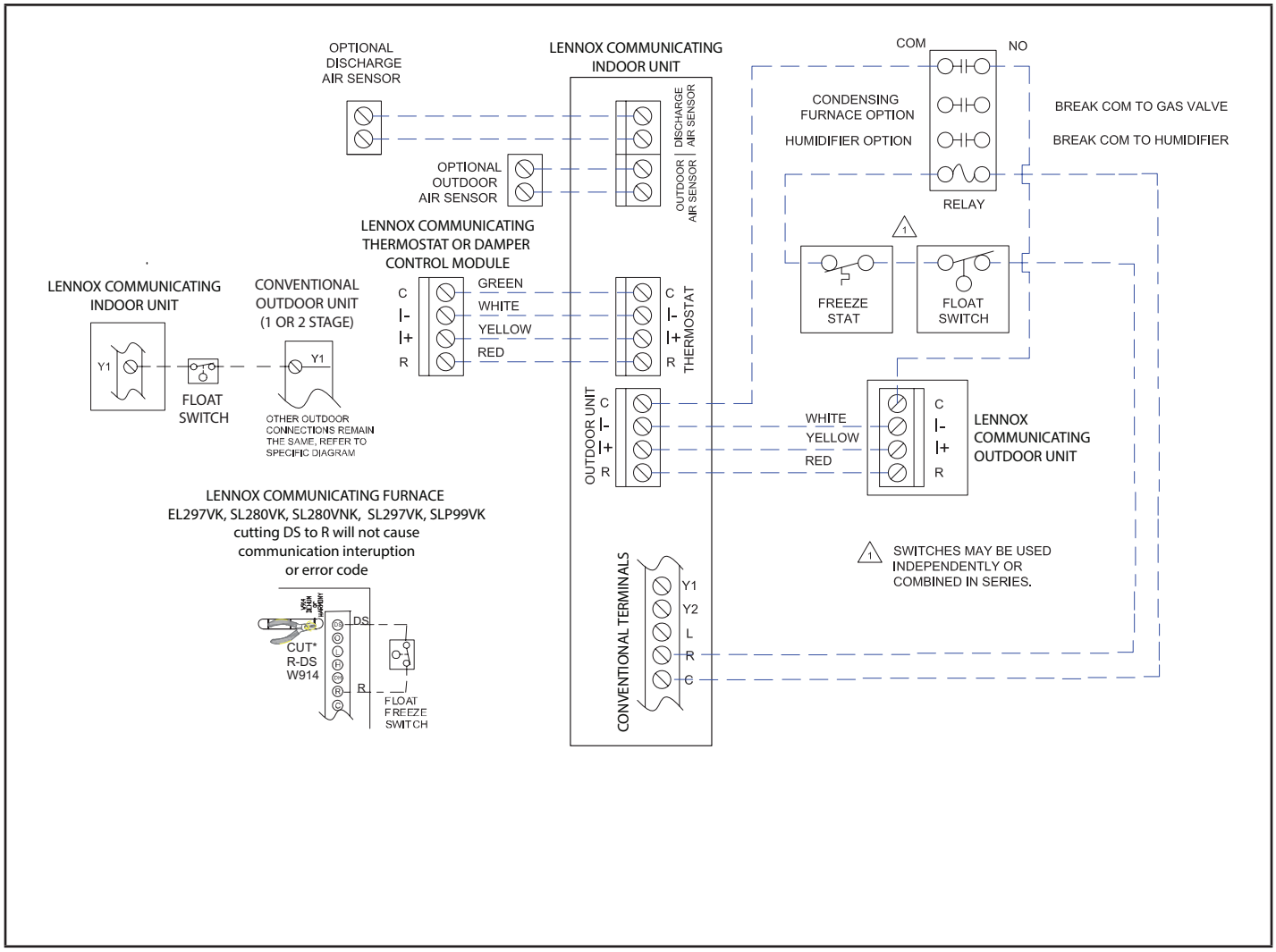

Figure 60

TABLE 11

DIP Switch Settings and Field Wiring

Thermostat	DIP Switch Settings and On-Board Links		Wiring Connections
	DIP Switch 1 Thermostat Heating Stages	On Board Links Must Be Cut To Select System Options	
1 Heat / 1 Cool *NOTE - Use DIP switch 2 to set second-stage heat ON delay. OFF-7 minutes. ON-12 minutes.* (L40 T-stat)	ON	DO NOT CUT ANY ON-BOARD LINKS 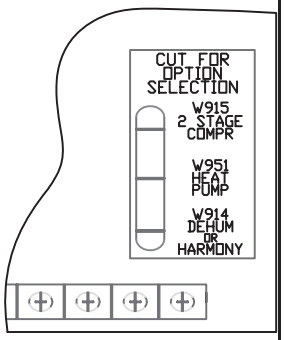	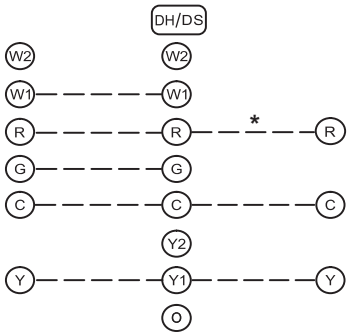
1 Heat / 2 Cool *NOTE - Use DIP switch 2 to set second-stage heat ON delay. OFF-7 minutes. ON-12 minutes.* (M30 T-stat)	ON	CUT ON-BOARD LINK W915 2 STAGE COMPR 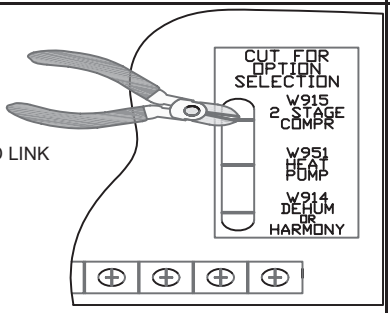	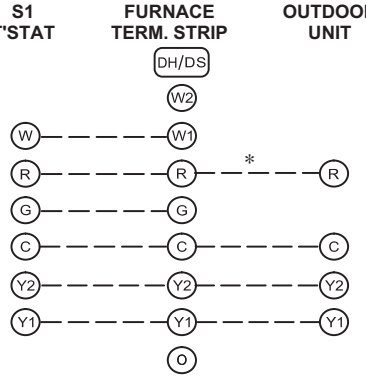
1 Heat / 2 Cool with t'stat with humidity control *NOTE - Use DIP switch 2 to set second-stage heat ON delay. OFF-7 minutes. ON-12 minutes.* (M30 T-stat)	ON	CUT ON-BOARD LINK W915 2 STAGE COMPR CUT ON-BOARD LINK W914 DEHUM OR HARMONY 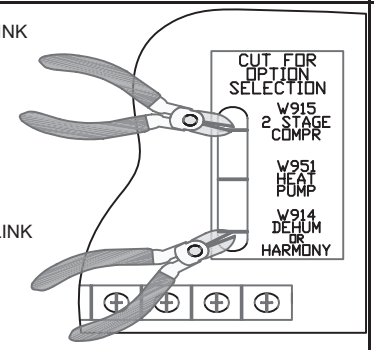	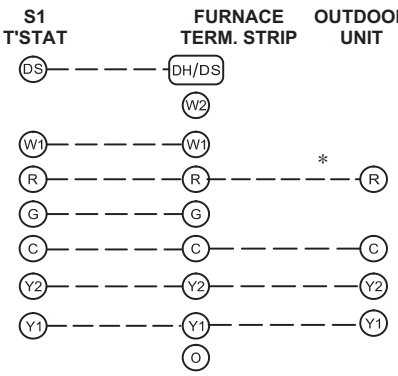

** Not required on all units.*

TABLE 11 Continued

DIP Switch Settings and Field Wiring

Thermostat	DIP Switch Settings and On-Board Links		Wiring Connections
	DIP Switch 1 Thermostat Heating Stages	On Board Links Must Be Cut To Select System Options	
2 Heat / 2 Cool (M30 T-stat)	OFF	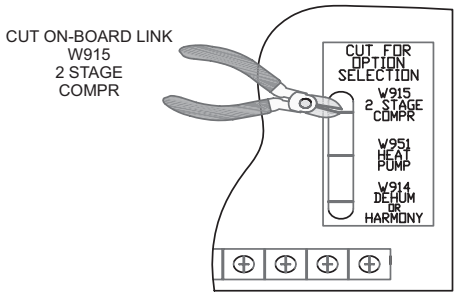	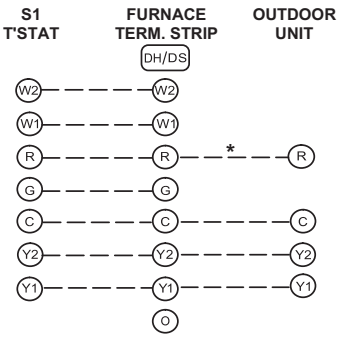
2 Heat / 2 Cool with t'stat with humidity control (M30 T-stat)	OFF	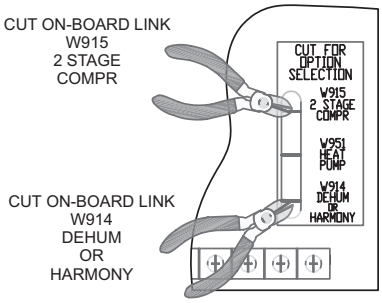	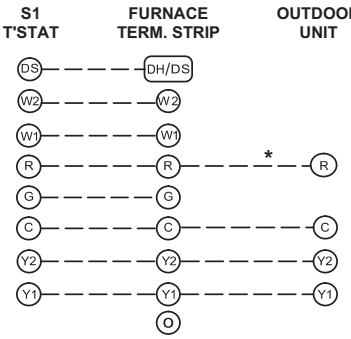
2 Heat / 1 Cool with t'stat with humidity control (M30 T-stat)	OFF	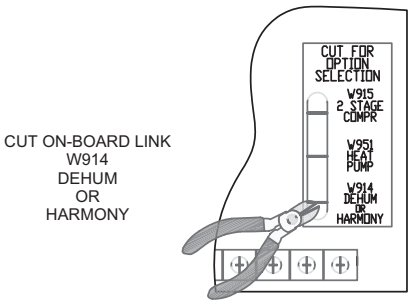	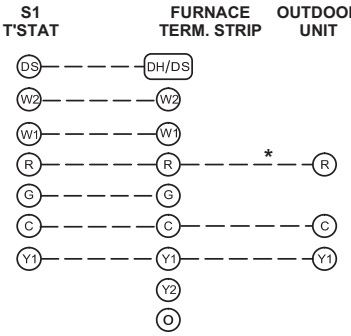
2 Heat / 1 Cool (M30 T-stat)	OFF	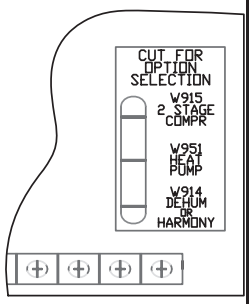	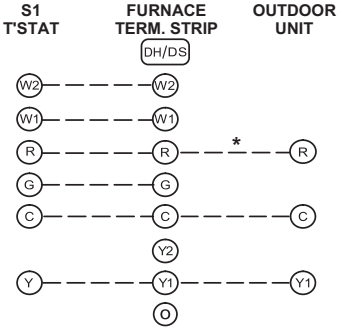

** Not required on all units.*

TABLE 11 Continued

DIP Switch Settings and Field Wiring

Thermostat	DIP Switch Settings and On-Board Links		Wiring Connections
	DIP Switch 1 Thermostat Heating Stages	On Board Links Must Be Cut To Select System Options	
Dual Fuel Single Stage Heat Pump (M30 T-stat) thermostat w/ dual fuel capa-bilities Capable of 2 stage gas heat control	OFF	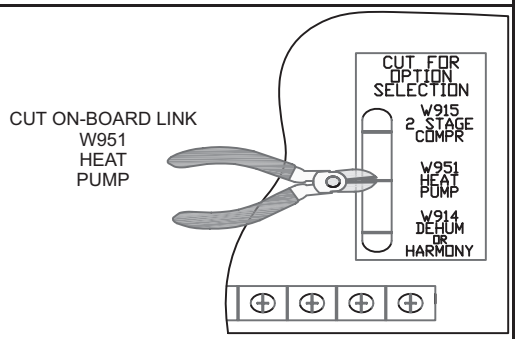	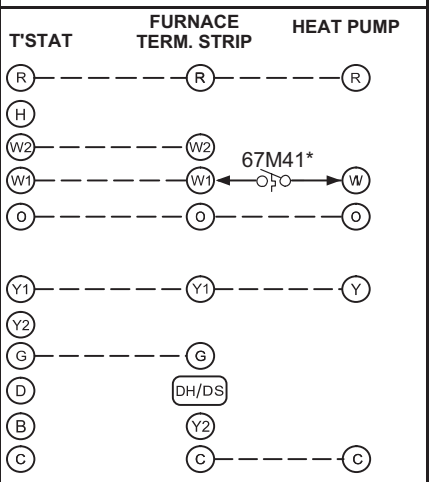
Dual Fuel Two Stage Heat Pump (M30 T-stat) thermostat w/ dual fuel capa-bilities Capable of 2 stage gas heat control	OFF	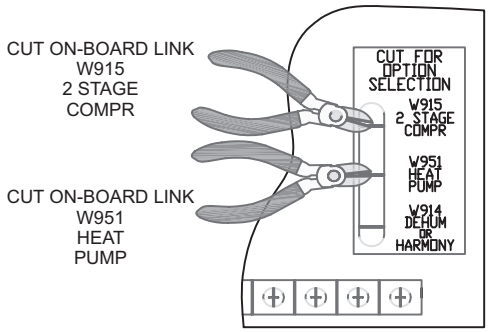	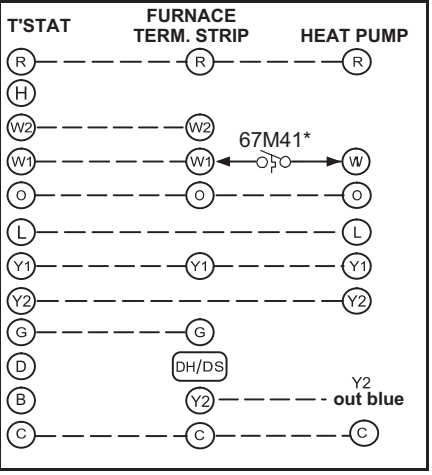

** Connect W1 to W1 ONLY if using defrost tempering kit 67M41*

*NOTE - **Do NOT** make a wire connection between the room thermostat L terminal and the L terminal of the furnace integrated control.*

TABLE 11 Continued

DIP Switch Settings and Field Wiring

Thermostat	DIP Switch Settings and On-Board Links		Wiring Connections
	DIP Switch 1 Thermostat Heating Stages	On Board Links Must Be Cut To Select System Options	
Dual Fuel Single Stage Heat Pump (M30 T-stat) thermostat w/ dual fuel capabilities Capable of 2 stage gas heat control w/dehumidification control	OFF	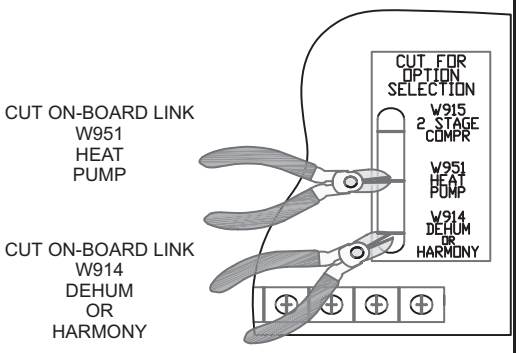	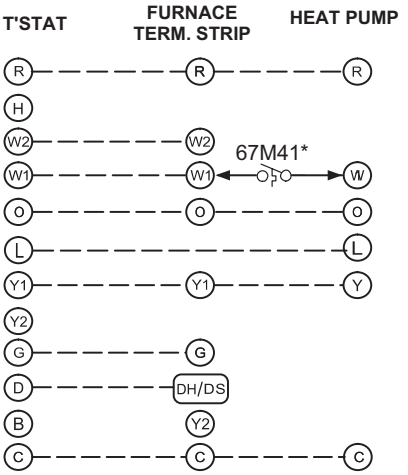
Dual Fuel Two Stage Heat Pump (M30 T-stat) thermostat w/ dual fuel capabilities Capable of 2 stage gas heat control w/dehumidification	OFF	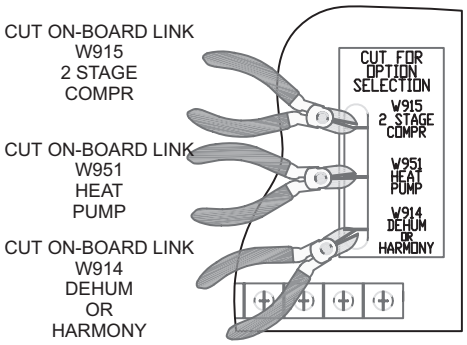	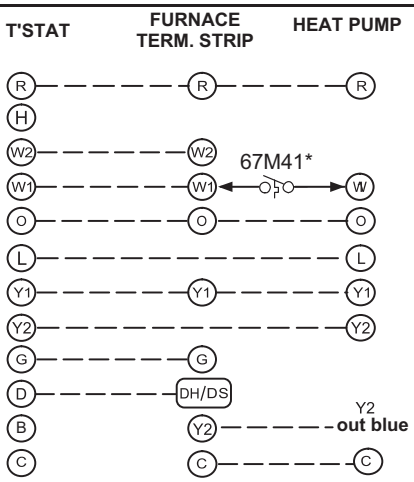

** Connect W1 to W1 ONLY if using defrost tempering kit 67M41*

*NOTE - **Do NOT** make a wire connection between the room thermostat L terminal and the L terminal of the furnace integrated control.*

Wiring Diagram

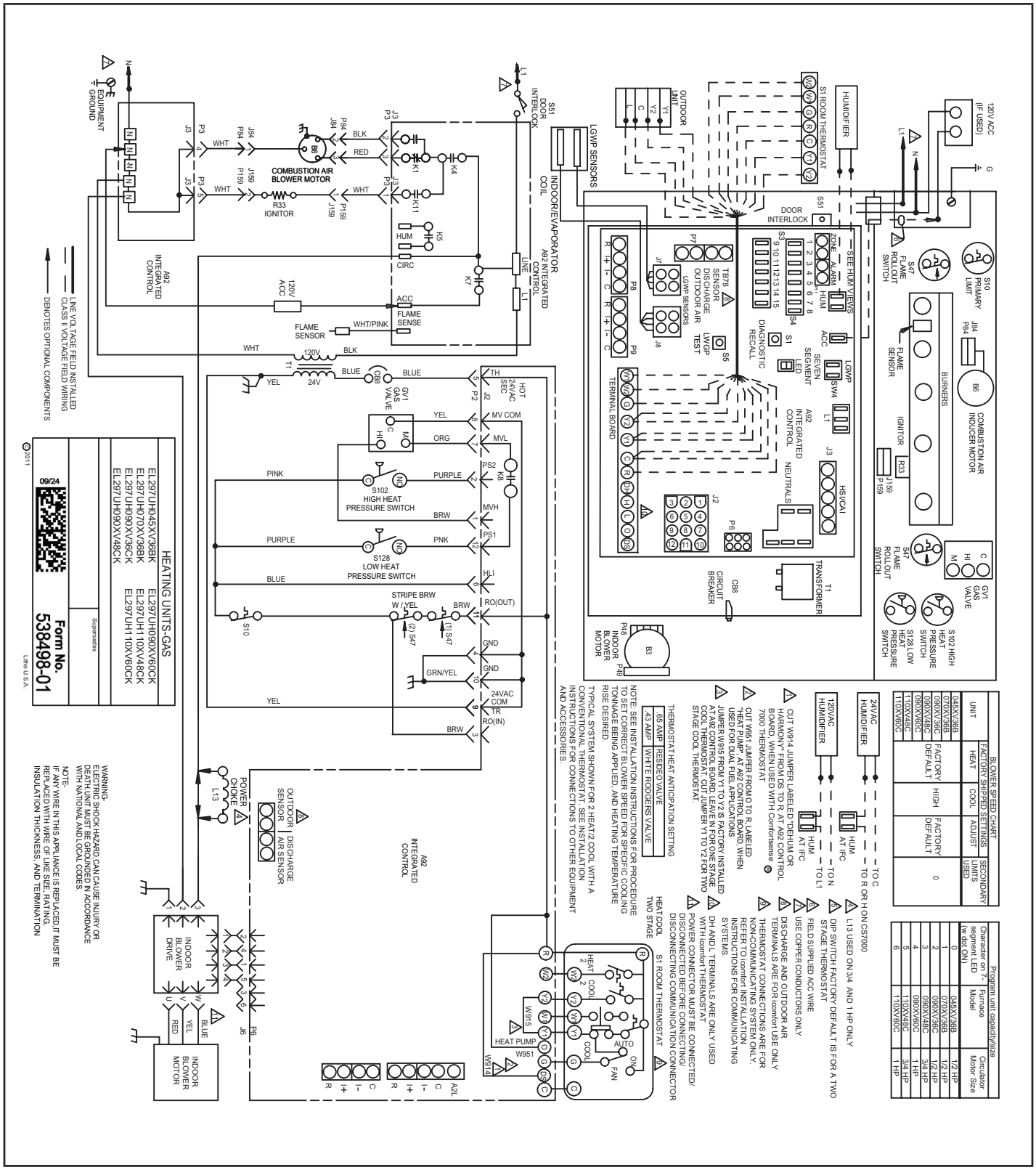

Figure 61

Wiring Diagram -135 only

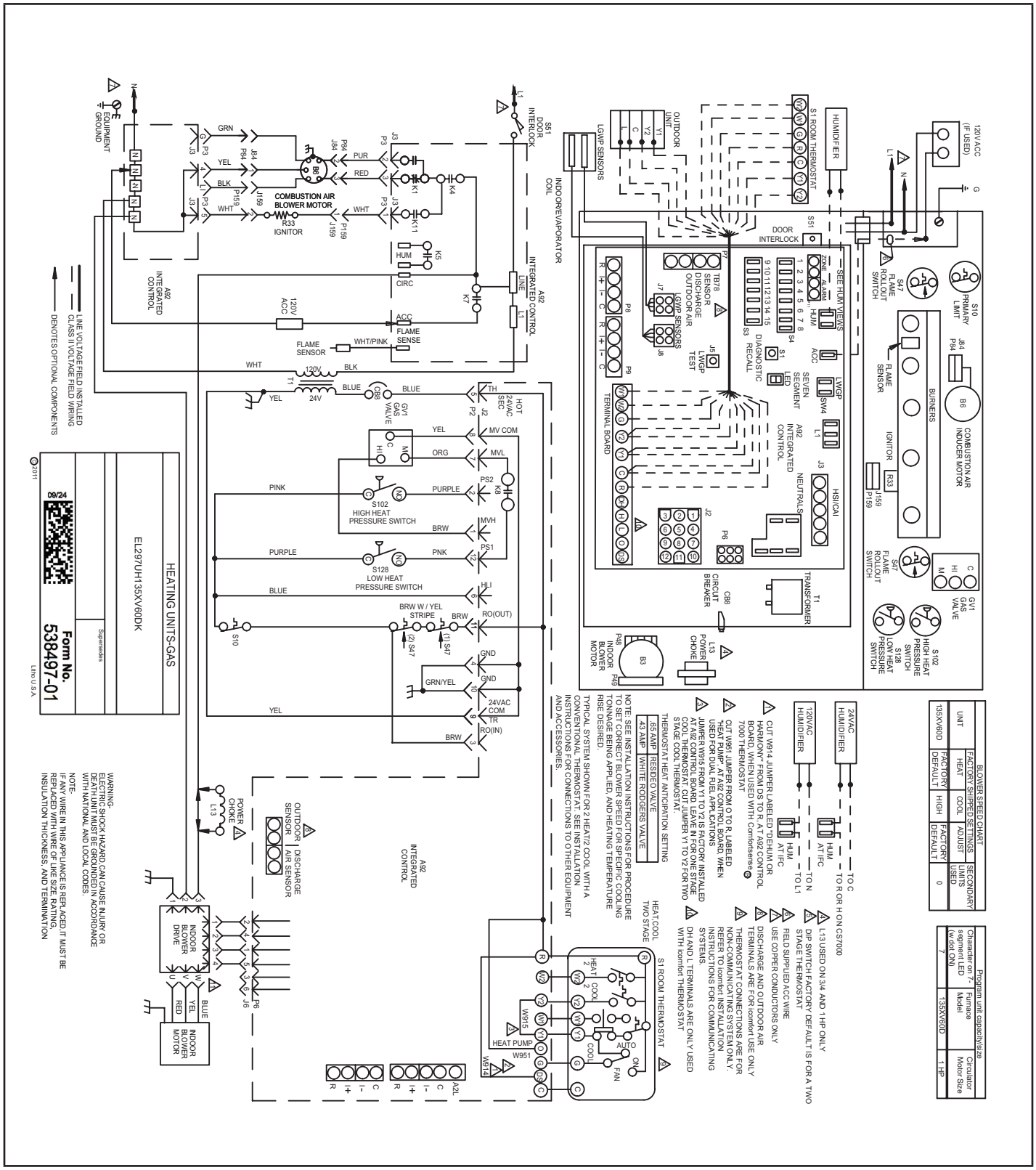

Figure 62

Ignition Control

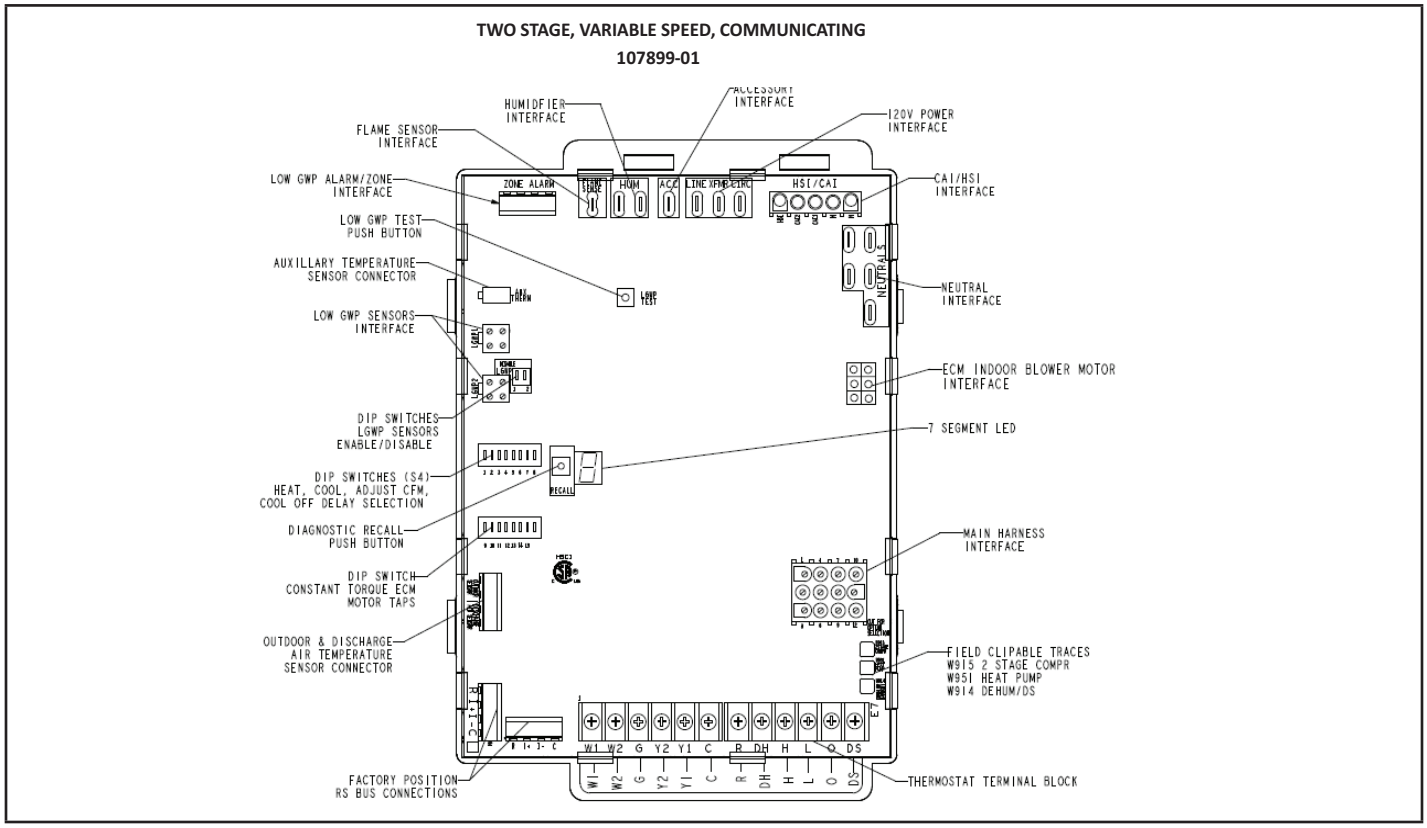

Figure 63

TABLE 12

1/4"QUICK CONNECT TERMINALS	
HUM	120 VAC OUTPUT TO HUMIDIFIER
XMFR	120 VAC OUTPUT TO TRANSFORMER
L1	120 VAC INPUT TO CONTROL
CIRC	120 VAC OUTPUT TO CIRCULATING BLLOWER
ACC	120 VAC TO ELECTRCAL AIR CLEANER
NEUTRALS (5)	120 VAC NEUTRAL

TABLE 13

12 PIN MAIN HARNESS	
1	MAIN VALVE HIGH
2	HIGH PRESSURE SWITCH
3	ROLLOUT INPUT
4	GROUND
5	24VAC HOT
6	HIGH LIMIT SWITCH
7	MAIN VALVE LOW
8	MAIN VALVE COMMON
9	24VAC RETURN
10	GROUND
11	ROLLOUT SWITCH OUTPUT
12	LOW PRESSURE SWITCH

TABLE 14

THERMOSTAT INPUT TERMINALS	
W1	LOW STAGE HEAT
W2	HIGH STAGE HEAT
G	FAN
Y1	LOW STAGE COOL
Y2	HIGH STAGE COOL24
C	THERMOSTAT COMMON / GROUND
R	24VAC POWER TO THE THERMOSTAT
DH	DEHUMIDFICATION (COMM ONLY)
H	24V HUMIDIFIER OUTPUT
L	LSOM (COMM ONLY)
O	HEAT PUMP REVERSING VALVE
DS	DEHUMIDIFICATION (NON-COMM ONLY)

TABLE 15

LOW GWP INTERFACE	
LGWP1	LOW GWP SENSOR #1 INTERFACE
LGWP2	LOW GWP SENSOR # 2 INTERFACE
ALARM	INTERFACE TO LOW GWP LEAK AUDIBLE ALARM (DRY CONTACT)
ZONE	INTERFACE TO ZONING CONTROL (DRY CONTACT)
LGWP TEST	PUSH BUTTON TO TEST LOW GWP FUNCTIONALITY

Ignition Control Diagnostic Codes

DIAGNOSTIC CODES / STATUS OF FURNACE	CODE
IDLE MODE (DECIMALBLINKS AT 1 HERTZ -- 0.5 SECONDS ON, 0.5 SECONDS OFF	.
INDOOR BLOWER OPERATION: CONTINUOUS FAN MODE (COSTANT TORQUE ONLY) INDOOR BLOWER OPERATION: FOLLOWED BY CFM SETTING FOR INDOOR BLOWER (1 SECOND ON, 0.5 SECOND OFF) / CFM SETTING FOR MODE DISPLAYED (VARIALBE SPEED ONLY)	A
COOLING STAGE (1 SECOND ON, 0.5 SECOND OFF) 1 OR 2 DISPLAYED / PAUSE / REPEAT CODES. VARIABLE SPEED ONLY	C
GAS HEAT (1 SECOND ON, 0.5 SECOND OFF) PAUSE / CFM DISPLAYED / PAUSE / REPEAT CODES BLINKING - IGNITION	H
HEAT PUMP STAGE (1 SECOND ON, 0.5 SECOND OFF) 1 OR 2 DISPLAYED / PAUSE / CFM SETTING DISPLAYED / PAUSE / REPEAT CODES	h
DEFROST MODE	dF
ERROR/FAULT CONDTION	**CODE**
NO ERROR IN THE MEMORY	E000
ELECTRICAL FAULTS (WAIT FOR RECOVERY)	
AC LINE VOLTAGE LOW	E110
LINE VOLTAGE POLARITY REVERSED	E111
EARTH GROUND NOT DETECTED	E112
AC LINE VOLTAGE HIGH	E113
LINE VOLTAGE FREQUENCY UOT OF RANGE	E114
LOW 24V - CONTROLWILL RESTART IF THE ERROR RECOVERS	E115
HARDWARE FAULT (5 MINUTES LOCKOUT)	
CONTROL HARDWARE (INCLUDE A/D ELECTRONICS AND FLAME TEST) FAILURE	E125
HARD LOCKOUT FAULT	
ROLLOUT OPEN OR PREVIOUSLY OPENED	E200
GAS VALVE/PRESSURE SWITCH/LIMT FAULTS (wait for recovery)	
GAS VALVE RELAY (1ST OR 2ND STAGE) PROBLEM	E204
GAS VALVE 2ND STAGE BRELAY PROBLEM	E206
LOW PRESSURE SW FAILED TO CLOSE (STUCK OPEN)	E223
LOW PRESSURE SW FAILED TO OPEN (STUCK CLOSED)	E224
HIGH PRESSURE SW FAILED TO CLOSE (STUCK OPEN)	E225
HIGH PRESSURE SW FAILED TO OPEN (STUCK CLOSED)	E226
LOW PRESSURE SWITCH OPENED IN RUN OR TFI	E227
FLAME SENSE OUT OF SEQUENCE-STILL PRESENT	E241
PRIMARY LIMIT SWITCH OPENED	E250
RSBUS COMMUNICATION CODES	
DEVICE COMMUNIATION PROBLEM - NO OTHER DEVICES ON BUS	E105
UNRESPONSIVE DEVICE	E120
ACTIVE SUBNETCONTROLLER MISSING FOR MORE THAN 3 MINUTES	E124
OUTDOOR UNITS CODES	
RELAY Y1 STUCK	E344
RELAY O FAILURE	E345
OUTDOOR AIR TEMPOERATURE SENSOR FAILURE	E180
RELAY Y1 FAILURE - RELAY ENERGIZED BUT NO INPUT SENSED	E347
RELAY Y2 FAILURE - RELAY ENERGIZED BUT NO INPUT SENSED	E348
INTERLOCK SWITCH (DS TERMINAL) SENSED OPEN (COMMUNCATING MODE ONLY)	E370

Ignition Control Diagnostic Codes (Continued)

SOFT LOCKOUT FAULTS (60 MINUTES)	
UNABLE TO COMMUNICATE WITH CIRCULAR MOTOR	E201
GAS VALVE RELAY (1ST OR 2ND STAGE) CONTACT SHORTED	E205
HOT SURFACE IGNITOR (HSI) SENSED OPEN	E207
SOFT LOCKOUT-FLAME FAILURE ON IGNITION, IGNITION RETRY>MAX, LAST FAILED RETRY DUE TO FLAME FAILURE	E270
SOFT LOCKOUT-PRESSURE SWITCH OPEN, IGNITION RETRY>MAX, LAST FAILED RETRY DUE TO LPSW OPEN	E271
SOFT LOCKOUT-PRESSURE SWITCH OPEN, IN RUN MODE HEATING RECYCLES>MAX, LAST FAILED RETRY DUE TO LPSW OPEN	E272
SOFT LOCKOUT-FLAME FAILURE IN RUN MODE,HEATING RECYCLES>MAX, LAST FAILED RETRY DUE TO LOSS OF FLAME	E273
SOFT LOCKOUT-LIMIT OPEN > 3 MINUTES	E274
SOFT LOCKOUT-FLAME OUT OF SEQUENCE AND IS GONE	E275
IGNITOR CIRCUIT FAULT-FAILED IGNITOR OR TRIGGERING CIRCUITRY.	E290
INDOOR BLOWER UNABLE TO START	E292
PERFORMANCE WARNING	
POOR GROUND DETECTED	E117
IGNTION ON HIGH FIRE	E229
LOW FLAME CURRENT IN HEATING MODE	E240
NON-VOLATILE DATA CORRUPTION	E131
LOW FLAME CURRENT IN HEATING MODE	E240
INDOOR BLOWER MOTOR TEMPERATURE TOO HIGH	E295
DISCHARGE AIR SENSOR FAILURE - NO ERROR IF JUST DISCONNECTED, ONLY SHOW IF SHORTED OR OUT OF RANGE	E310
RESTRICTED AIRFLOW HEATING, HEAT FIRING RATE REDUCED TO MATCH CFM	E311
RESTRICTED AIRFLOW COOLING OR CONTINUOUS FAN MODE - INFORMATION ONLY	E312
INDOOR OUTDOOR UNIT CAPACITY MISMATCH	E313
LOW GWP REFRIGERANT FAULTS	
REFRIGERANT LEAK DETECTED, THERMOSTAT LOCKOUT	E150
REFRIGERANT LEAK DETECTOR SENSOR #1 FAULT	E151
REFRIGERANT LEAK DETECTOR SENSOR #2 FAULT	E152
REFRIGERANT LEAK DETECTOR SENSOR #1 COMM. LOST	E154
REFRIGERANT LEAK DETECTOR SENSOR #2 COMM. LOST	E155
REFRIGERANT LEAK DETECTOR SENSOR #1 TYPE INCORRECT	E160
REFRIGERANT LEAK DETECTOR SENSOR #2 TYPE INCORRECT	E161
REFRIGERANT LEAK DETECTOR CONTROL FAILURE	E163
LOW GWP TEST	E164
LOW GWP RELAY STUCK	E390

Integrated Control DIP Switch Settings Conventional Thermostat (non-communicating)

EL297UHVK units are equipped with a two-stage, variable speed integrated control. This control manages ignition timing, heating mode fan off delays and indoor blower speeds based on selections made using the control dip switches and jumpers. The control includes an internal watchguard feature which automatically resets the ignition control when it has been locked out. After one hour of continuous thermostat demand for heat, the watchguard will break and remake thermostat demand to the furnace and automatically reset the control to relight the furnace.

Note: *All communicating settings are set at the communicating thermostat. See thermosatat installation instruction. In a communication system all DIP switch and clippable link settings are ignored. For conventional thermostats proceed with DIP switch and clippable link settings as outlined in the following.*

Heating Operation DIP Switch Settings

Switch 1 -- Thermostat Selection -- This unit may be used with either a single-stage or two-stage thermostat. The thermostat selection is made using a DIP switch which must be properly positioned for the particular application. The DIP switch is factory-positioned for use with a twostage thermostat. If a single-stage thermostat is to be used, the DIP switch must be repositioned.

a. Select "OFF" for two-stage heating operation controlled by a two-stage heating thermostat (factory setting);

b. Select "ON" for two-stage heating operation controlled by a single-stage heating thermostat. This setting provides a timed delay before second-stage heat is initiated.

Switch 2 -- Second Stage Delay (Used with Single-Stage Thermostat Only) -- This switch is used to determine the second stage on delay when a single-stage thermostat is being used. The switch is factory-set in the OFF position, which provides a 7-minute delay before second-stage heat is initiated. If the switch is toggled to the ON position, it will provide a 12-minute delay before second-stage heat is initiated. This switch is only activated when the thermostat selector jumper is positioned for SINGLE-stage thermostat use.

Switches 3 and 4 -- Blower-Off Delay -- The blower-on delay of 30 seconds is not adjustable. The blower-off delay (time that the blower operates after the heating demand has been satisfied) can be adjusted by moving switches 3 and 4 on the integrated control. The unit is shipped from the factory with a blower-off delay of 90 seconds. The blower off delay affects comfort and is adjustable to satisfy individual applications. Adjust the blower off delay to achieve a supply air temperature between 90° and 110°F at the exact moment that the blower is de-energized. Longer off delay settings provide lower supply air temperatures; shorter settings provide higher supply air temperatures. TABLE 16 provides the blower off timings that will result from different switch settings.

TABLE 16

Blower Off Delay Switch Settings

Blower Off Delay Seconds	Switch 3	Switch 4
60	On	Off
90 (factory)	Off	Off
120	Off	On
180	On	On

Indoor Blower Operation DIP Switch Settings

Switches 5 and 6 -- Cooling Mode Blower Speed -- The unit is shipped from the factory with the dip switches positioned for high speed (4) indoor blower motor operation during the cooling mode. TABLE 17 provides the cooling mode blower speeds that will result from different switch settings. Switches 5 and 6 set the blower cfm for second-stage cool. The integrated control automatically ramps down to 70% of the second-stage cfm for first-stage cfm. Refer to tables for corresponding cfm values. See Product Specifications for more detailed blower cfm tables.

TABLE 17

Cooling Mode Blower Speeds

Speed	Switch 5	Switch 6
Low	On	On
Medium Low	Off	On
Medium High	On	Off
High (factory)	Off	Off

Switches 7 and 8 -- Cooling Blower Speed Adjustment -- The unit is shipped from the factory with the dip switches positioned for NORMAL (no) adjustment. The dip switches may be positioned to adjust the blower speed by +10% or -10% to better suit the application. TABLE 18 below provides blower speed adjustments that will result from different switch settings. Refer to tables for corresponding cfm values. See Product Specifications for more detailed blower cfm tables.

TABLE 18

Cooling Blower Speed Adjustment

Adjustment	Switch 7	Switch 8
+10% (approx)	On	Off
Factory Default	Off	Off
-10% (approx)	Off	On

Switches 9 and 10 -- Cooling Mode Blower Speed Ramping -- Blower speed ramping may be used to enhance dehumidification performance. The switches are factory set at option A which has the greatest effect on dehumidification performance. TABLE 19 provides the cooling mode blower speed ramping options that will result from different switch settings. The cooling mode blower mode blower speed ramping options are detailed on the next page.

***NOTE -** The off portion of the selected ramp profile also applies during heat pump operation in dual fuel applications.*

TABLE 19

Cooling Mode Blower Speed Ramping

Ramping	Switch 9	Switch 10
A (Factory)	Off	Off
B	Off	On
C	On	Off
D	On	On

Ramping Option A (Factory Selection)

- Motor runs at 50% for 30 seconds.
- Motor then runs at 82% for approximately 7-1/2 minutes.
- If demand has not been satisfied after 7-1/2 minutes, motor runs at 100% until demand is satisfied.
- Once demand is met, motor runs at 50% for 30 seconds then ramps down to stop.

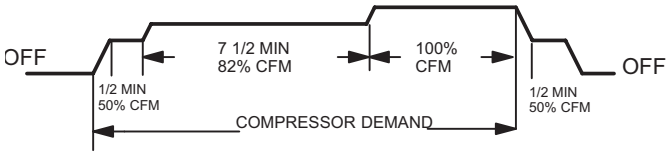

Ramping Option B

- Motor runs at 82% for approximately 7-1/2 minutes. If demand has not been satisfied after 7-1/2 minutes, motor runs at 100% until demand is satisfied.
- Once demand is met, motor ramps down to stop.

Ramping Option C

- Motor runs at 100% until demand is satisfied.
- Once demand is met, motor runs at 100% for 45 seconds then ramps down to stop.

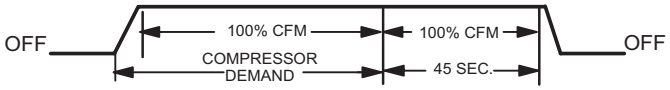

Ramping Option D

- Motor runs at 100% until demand is satisfied.
- Once demand is met, motor ramps down to stop.

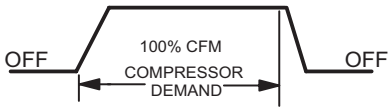

Switches 11, 12 and 13 -- Heating Mode Blower Speed
The switches are factory set to the OFF position which provides factory default heat speed. Refer to TABLE 20 for switches 11, 12 and 13 that provided the corresponding increases or decrease to both high and low heat demand. See TABLE 31 on page 75 for allowable heating speeds.

TABLE 20

Heating Mode Blower Speeds

Heat Speed	Switch 11	Switch 12	Switch 13
Increase 24%	On	On	On
Increase 18%	On	On	Off
Increase 12%	On	Off	On
Increae 6%	On	Off	Off
Factory Default	Off	Off	Off
Decrease 6%	Off	Off	On
Decrease 12%	Off	On	Off
Decrease 18%	Off	On	On

Switches 14 and 15 -- Continuous Blower Speed --

TABLE 21 provides continuous blower speed adjustments that will result from different switch settings.

TABLE 21

Continuous Blower Speed

Coninuous Blower Speed	Switch 14	Switch 15
28% of High Cool Speed	Off	On
38% of High Cool Speed (Factory Setting)	Off	Off

Switch 16 - Not Used

Blower Data

EL297UH045XV36BK BLOWER PERFORMANCE (less filter)

BOTTOM RETURN AIR

0 through 0.8 in. w.g. (Heating) and 0 through 1.0 in. w.g. (Cooling) External Static Pressure Range

HEATING		
[1] Heating Speed DIP Switch Settings	First Stage Heating Speed - cfm	Second Stage Heating Speed - cfm
+24%	915	1125
+18%	865	1085
+12%	805	1040
+6%	780	985
Factory Default	740	925
–6%	665	875
–12%	630	800
–18%	585	735

COOLING								
[1] Cooling Speed DIP Switch Settings	First Stage Cooling Speed - cfm				Second Stage Cooling Speed - cfm			
	Low	Medium-Low	Medium-High	[2] High	Low	Medium-Low	Medium-High	[2] High
+	630	755	850	960	905	1055	1195	1335
Factory Default	580	695	780	870	830	965	1100	1225
–	505	635	715	795	755	885	1025	1125

EL297UH070XV36BK BLOWER PERFORMANCE (less filter)

BOTTOM RETURN AIR

0 through 0.8 in. w.g. (Heating) and 0 through 1.0 in. w.g. (Cooling) External Static Pressure Range

HEATING		
[1] Heating Speed DIP Switch Settings	First Stage Heating Speed - cfm	Second Stage Heating Speed - cfm
+24%	1095	1220
+18%	1035	1170
+12%	985	1120
+6%	915	1055
Factory Default	850	995
–6%	835	915
–12%	755	845
–18%	695	810

COOLING								
[1] Cooling Speed DIP Switch Settings	First Stage Cooling Speed - cfm				Second Stage Cooling Speed - cfm			
	Low	Medium-Low	Medium-High	[2] High	Low	Medium-Low	Medium-High	[2] High
+	635	765	885	1005	920	1085	1240	1410
Factory Default	585540	700	795	910	835	990	1135	1280
–		640	720	810	745	895	1030	1160

[1] Cooling and heating speeds are based on a combination of DIP switch settings on the furnace control. Refer to Installation Instructions for specific DIP Switch Settings.

[2] Factory default setting.

NOTES - The effect of static pressure is included in air volumes shown.
First stage HEAT is approximately 91% of the same second stage HEAT.
First stage COOL (two-stage air conditioning units only) is approximately 70% of the same second stage COOL speed position.
Continuous Fan Only speed is selectable at 28% and 38% of the selected second stage cooling speed - minimum 250 cfm.
Lennox iHarmony® Zoning System Applications - Minimum blower speed is 250 cfm.

Blower Data

EL297UH090XV36CK BLOWER PERFORMANCE (less filter)

BOTTOM RETURN AIR

0 through 0.8 in. w.g. (Heating) and 0 through 1.0 in. w.g. (Cooling) External Static Pressure Range

HEATING		
[1] Heating Speed DIP Switch Settings	First Stage Heating Speed - cfm	Second Stage Heating Speed - cfm
+24%	1215	1300
+18%	1140	1240
+12%	1100	1170
+6%	1020	1115
Factory Default	965	1070
–6%	915	970
–12%	850	925
–18%	805	855

COOLING								
[1] Cooling Speed DIP Switch Settings	First Stage Cooling Speed - cfm				Second Stage Cooling Speed - cfm			
	Low	Medium-Low	Medium-High	[2] High	Low	Medium-Low	Medium-High	[2] High
+	660	775	865	975	910	1075	1230	1405
Factory Default	615	720	800	885	835	985	1125	1265
–	560	660	740	810	750	890	1015	1150

EL297UH090XV48CK BLOWER PERFORMANCE (less filter)

BOTTOM RETURN AIR

0 through 0.8 in. w.g. (Heating) and 0 through 1.0 in. w.g. (Cooling) External Static Pressure Range

HEATING		
[1] Heating Speed DIP Switch Settings	First Stage Heating Speed - cfm	Second Stage Heating Speed - cfm
+24%	1490	1645
+18%	1415	1565
+12%	1330	1480
+6%	1295	1405
Factory Default	1220	1325
–6%	1150	1260
–12%	1065	1190
–18%	1010	1105

COOLING								
[1] Cooling Speed DIP Switch Settings	**First Stage Cooling Speed - cfm**				**Second Stage Cooling Speed - cfm**			
	Low	**Medium-Low**	**Medium-High**	**[2] High**	**Low**	**Medium-Low**	**Medium-High**	**[2] High**
+	795	950	1080	1260	1115	1355	1550	1775
Factory Default	730	870	985	1140	1015	1220	1430	1605
–	650	790	890	1020	930	1105	1285	1470

[1] Cooling and heating speeds are based on a combination of DIP switch settings on the furnace control. Refer to Installation Instructions for specific DIP Switch Settings.

[2] Factory default setting.

NOTES - The effect of static pressure is included in air volumes shown.
First stage HEAT is approximately 91% of the same second stage HEAT.
First stage COOL (two-stage air conditioning units only) is approximately 70% of the same second stage COOL speed position.
Continuous Fan Only speed is selectable at 28% and 38% of the selected second stage cooling speed - minimum 380 cfm.
Lennox® Smart Zoning System Applications - Minimum blower speed is 380 cfm.

Blower Data

EL297UH090XV60CK BLOWER PERFORMANCE (less filter)

BOTTOM RETURN AIR

0 through 0.8 in. w.g. (Heating) and 0 through 1.0 in. w.g. (Cooling) External Static Pressure Range

HEATING		
[1] Heating Speed DIP Switch Settings	First Stage Heating Speed - cfm	Second Stage Heating Speed - cfm
+24%	1490	1985
+18%	1435	1915
+12%	1335	1805
+6%	1280	1645
Factory Default	1185	1625
–6%	1095	1530
–12%	990	1450
–18%	900	1345

COOLING								
[1] Cooling Speed DIP Switch Settings	First Stage Cooling Speed - cfm				Second Stage Cooling Speed - cfm			
	Low	Medium-Low	Medium-High	[2] High	Low	Medium-Low	Medium-High	[2] High
+	1085	1240	1360	1540	1545	1770	1970	2210
Factory Default	1000	1135	1250	1385	1390	1605	1800	1980
–	895	1040	1135	1255	1440	1440	1620	1800

EL297UH110XV48CK BLOWER PERFORMANCE (less filter)

BOTTOM RETURN AIR

0 through 0.8 in. w.g. (Heating) and 0 through 1.0 in. w.g. (Cooling) External Static Pressure Range

HEATING		
[1] Heating Speed DIP Switch Settings	First Stage Heating Speed - cfm	Second Stage Heating Speed - cfm
+24%	1470	1605
+18%	1450	1495
+12%	1385	1445
+6%	1295	1385
Factory Default	1225	1305
–6%	1160	1225
–12%	1090	1150
–18%	1035	1070

COOLING								
[1] Cooling Speed DIP Switch Settings	**First Stage Cooling Speed - cfm**				**Second Stage Cooling Speed - cfm**			
	Low	**Medium-Low**	**Medium-High**	**[2] High**	**Low**	**Medium-Low**	**Medium-High**	**[2] High**
+	765	920	1040	1230	1085	1310	1515	1745
Factory Default	705	835	960	1100	985	1185	1395	1565
–	635	765	860	985	890	1070	1245	1425

[1] Cooling and heating speeds are based on a combination of DIP switch settings on the furnace control. Refer to Installation Instructions for specific DIP Switch Settings.

[2] Factory default setting.

NOTES - The effect of static pressure is included in air volumes shown.
First stage HEAT is approximately 91% of the same second stage HEAT.
First stage COOL (two-stage air conditioning units only) is approximately 70% of the same second stage COOL speed position.
Continuous Fan Only speed is selectable at 28% and 38% of the selected second stage cooling speed - minimum 380 cfm.
Lennox® Smart Zoning System Applications - Minimum blower speed is 380 cfm.

Blower Data

EL297UH110XV60CK BLOWER PERFORMANCE (less filter)

BOTTOM RETURN AIR

0 through 0.8 in. w.g. (Heating) and 0 through 1.0 in. w.g. (Cooling) External Static Pressure Range

HEATING		
[1] Heating Speed DIP Switch Settings	First Stage Heating Speed - cfm	Second Stage Heating Speed - cfm
+24%	1385	1965
+18%	1475	1880
+12%	1355	1790
+6%	1370	1725
Factory Default	1200	1630
–6%	1140	1550
–12%	1070	1460
–18%	980	1345

COOLING								
[1] Cooling Speed DIP Switch Settings	First Stage Cooling Speed - cfm				Second Stage Cooling Speed - cfm			
	Low	Medium-Low	Medium-High	[2] High	Low	Medium-Low	Medium-High	[2] High
+	1085	1235	1335	1525	1525	1745	1950	2185
Factory Default	990	1130	1240	1365	1375	1580	1780	1970
–	895	1025	1130	1250	1250	1415	1600	1780

EL297UH135XV60D BLOWER PERFORMANCE (less filter)

BOTTOM RETURN AIR

0 through 0.8 in. w.g. (Heating) and 0 through 1.0 in. w.g. (Cooling) External Static Pressure Range

HEATING		
[1] Heating Speed DIP Switch Settings	First Stage Heating Speed - cfm	Second Stage Heating Speed - cfm
+24%	1770	2125
+18%	1680	2015
+12%	1610	1935
+6%	1485	1855
Factory Default	1440	1740
–6%	1360	1650
–12%	1285	1565
–18%	1215	1460

COOLING								
[1] Cooling Speed DIP Switch Settings	First Stage Cooling Speed - cfm				Second Stage Cooling Speed - cfm			
	Low	Medium-Low	Medium-High	[2] High	Low	Medium-Low	Medium-High	[2] High
+	1095	1260	1400	1590	1585	1805	2020	2275
Factory Default	1000	1145	1270	1435	1440	1635	1840	2030
–	906	1035	1145	1275	1290	1480	1660	1840

[1] Cooling and heating speeds are based on a combination of DIP switch settings on the furnace control. Refer to Installation Instructions for specific DIP Switch Settings.

[2] Factory default setting.

NOTES - The effect of static pressure is included in air volumes shown.
First stage HEAT is approximately 91% of the same second stage HEAT.
First stage COOL (two-stage air conditioning units only) is approximately 70% of the same second stage COOL speed position.
Continuous Fan Only speed is selectable at 28% and 38% of the selected second stage cooling speed - minimum 450 cfm.
Lennox iHarmony® Zoning System Applications - Minimum blower speed is 450 cfm.

On-Board Links

Note: *In communicating systems with a conventional outdoor unit (non-communicating), the on-board clippable links must be set to properly configure the system.*

⚠ WARNING

Carefully review all configuration information provided. Failure to properly set DIP switches, jumpers and on-board links can result in improper operation!

On-Board Link W914 Dehum or Harmony (R to DS)

On-Board Link W914 Dehum or Harmony (R to DS) On-board link W914, is a clippable connection between terminals R and DS on the integrated control. W914 must be cut when the furnace is installed with either the Harmony III zone control or a thermostat which features humidity control. If the link is left intact the PMW signal from the Harmony III control will be blocked and also lead to control damage

Refer to TABLE 22 for operation sequence in applications including EL297UHVK, a thermostat which features humidity control and a single-speed outdoor unit. TABLE 23 gives the operation sequence in applications with a two-speed outdoor unit.

On-Board Link W951 Heat Pump (R to O)

On-board link W951 is a clippable connection between terminals R and O on the integrated control. W951 must be cut when the furnace is installed in applications which include a heat pump unit and a thermostat which features dual fuel use. If the link is left intact, terminal “O” will remain energized eliminating the HEAT MODE in the heat pump.

On-Board Link W915 2 Stage Compr (Y1 to Y2)

On-board link W915 is a clippable connection between terminals Y1 and Y2 on the integrated control. W915 must be cut if two-stage cooling will be used. If the Y1 to Y2 link is not cut the outdoor unit will operate in second-stage cooling only.

TABLE 22
OPERATING SEQUENCE
Non-Communicating Thermostat with Humidity Control Feature and Single-Speed Outdoor Unit

OPERATING SEQUENCE		SYSTEM DEMAND				SYSTEM RESPONSE				
System Condition	Step	Thermostat Demand				Relative Humidity		Compressor	Blower CFM (cool)	Comments
		Y1	O	G	W1	Status	D			
NO CALL FOR DEHUMIDIFICATION										
Normal Operation	1	On	On	On		Acceptable	24 VAC	High	100%	Compressor and indoor blower follow thermostat demand
BASIC MODE (only active on a Y1 thermostat demand)										
Normal Operation	1	On	On	On		Acceptable	24 VAC	High	100%	ComfortSense® 7500 thermostat energizes Y1 and de-energizes D on a call for de-humidification
Dehumidification call	2	On	On	On		Demand	0 VAC	High	70%	
PRECISION MODE (operates independent of a Y1 demand)										
Normal Operation	1	On	On	On		Acceptable	24 VAC	High	100%	Dehumidification mode begins when humidity is greater than set point
Dehumidification Call	2	On	On	On		Demand	0 VAC	High	70%	
Dehumidification Call Only	1	On	On	On		Demand	0 VAC	High	70%	ComfortSense® 7500 thermostat will try to maintain room humidity setpoint by allowing the room space to maintain a cooler room thermostat setpoint**
	Jumpers at indoor unit with a single stage outdoor unit. With Condensing unit - Cut W914 (R to DS) on SureLight® control With Heat Pump - Cut W914 (R to DS) & W951 (R to O) on SureLight® control									

Dave Lennox ComfortSense® 7000 thermostat to use for this application - Y2081 4 heat / 2 cool

**Dehumidification blower speed is 70% of COOL speed for all units .*

***In Precision mode, ComfortSense® 7000 thermostat will maintain room temperature up to 2 °F (1.2°C) cooler than room setting.*

TABLE 23
OPERATING SEQUENCE
Non-Communicating Thermostat with Humidity Control Feature and Two-Speed Outdoor Unit

OPERATING SEQUENCE		SYSTEM DEMAND						SYSTEM RESPONSE				
System Condition	Step	Thermostat Demand						Relative Humidity		Compressor	Blower CFM (cool)	Comments
		Y1	Y2	O	G	W1	W2	Status	D			
NO CALL FOR DEHUMIDIFICATION												
Normal Operation Y1	1	On		On	On			Acceptable	24 VAC	Low	70%	Compressor and indoor blower follow thermostat demand
Normal Operation Y2	2	On	On	On	On			Acceptable	24 VAC	High	100%	
ROOM THERMOSTAT CALLS FOR FIRST STAGE COOLING												
BASIC MODE (only active on a Y1 thermostat demand)												
Normal Operation	1	On		On	On			Acceptable	24 VAC	Low	70%	ComfortSense® 7500 thermostat energizes Y1 and de-energizes D on a call for de-humidification
Dehumidification call	2	On	On	On	On			Demand	0 VAC	High	70%	
PRECISION MODE (operates independent of a Y1 demand)												
Normal Operation	1	On		On	On			Acceptable	24 VAC	Low	70%	Dehumidification mode begins when humidity is greater than set point
Dehumidification Call	2	On	On	On	On			Demand	0 VAC	High	70%	
Dehumidification Call Only	1	On	On	On	On			Demand	0 VAC	High	70%	ComfortSense® 7500 thermostat will try to maintain room humidity setpoint by allowing the room space to maintain a cooler room thermostat setpoint**
ROOM THERMOSTAT CALLS FOR FIRST AND SECOND STAGE COOLING												
BASIC MODE (only active on a Y1 thermostat demand)												
Normal Operation	1	On	On	On	On			Acceptable	24 VAC	High	100%	ComfortSense® 7500 thermostat energizes Y2 and de-energizes D on a call for de-humidification
Dehumidification Call	2	On	On	On	On			Demand	0 VAC	High	70%	
PRECISION MODE (operates independent of a Y1 thermostat demand)												
Normal Operation	1	On		On	On			Acceptable	24 VAC	Low	70%	Dehumidification mode begins when humidity is greater than set point
Dehumidification Call	2	On	On	On	On			Demand	0 VAC	High	70%	
Dehumidification Call ONLY	1	On	On	On	On			Demand	0 VAC	High	70%	ComfortSense® 7500 thermostat will try to maintain room humidity setpoint by allowing the room space to maintain a cooler room thermostat setpoint***
	Jumpers at indoor unit with a two stage outdoor unit Cut factory jumper from Y1 to Y2 or cut W915 (Y1 to Y2) With Condensing unit - Cut W914 (R to DS) on SureLight® control With Heat Pump - Cut W914 (R to DS) & W951 (R to O) on SureLight® control											

Dave Lennox ComfortSense® 7000 thermostat to use for this application - Y2081 4 heat / 2 cool

**Normal operation first stage cooling blower speed is 70% COOL speed.*

***Dehumidification blower speed is, reduced to 70% of COOL.*

****In Precision mode, ComfortSense® 7000 thermostat will maintain room temperature up to 2 °F (1.2°C) cooler than room setting.*

Low GWP Application

⚠ WARNING

For use with Lennox approved evaporator coil and LGWP sensors only. Use original manufacturer recommended LGWP sensors if using non Lennox approved evaporator coil.

CONNECTING THE FURNACE CONTROL BOARD SENSOR.

See FIGURE 53 and follow steps below:

1 - Route sensor wire #1 through provided grommet. Form a drip loop below the control board on upflow installations to prevent condensate dripping on the control board.

2 - Avoid sharp edges when routing sensor wire during installation.

3 - Sensor wire must not block view of 7 segment LED .

Ensure the cable is properly seated into the SENSOR 1 plug (LGWP1). The Molex plug clip should lock into the Molex connection point for a secured connection, as shown below in Figure 64. Verify the connection is free of dust, debris, and moisture.

NOTE - *In confined space applications, connect the second sensor to the SENSOR 2 plug (LGWP2). Refer to evaporator coil installation instructions for more detail.*

Two Stage Variable Speed Control

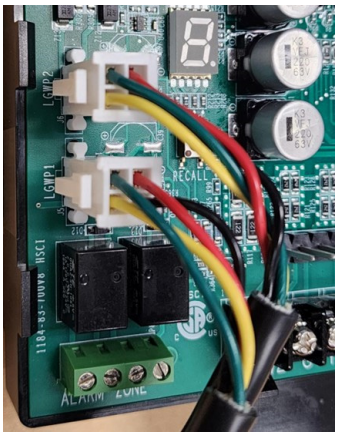

Figure 64

LOW GWP DIP SWITCH SETTINGS

Adjust the DIP switch settings to the sensor configuration. Failure to do so will cause faults on power-up. See FIGURE 52 and TABLE 24.

Figure 65

TABLE 24

DIP Switch Settings

Configuration	Switch 1	Switch 2
One (1) sensor, connected to SENSOR 1 plug	OFF (enable)	ON (disable)
Two (2) sensors, connected to SENSOR 1 plug and SENSOR 2 plug	OFF (enable)	OFF (enable)

In single sensor configurations, the sensor must be connected to the SENSOR 1 plug (LGWP1). Configurations other than the ones shown in TABLE 24 will cause a servicing fault.

Each DIP switch corresponds to a sensor position (i.e., DIP switch 1 to sensor 1; DIP switch 2 to sensor 2). The default factory switch positions are set to OFF (ENABLED)

The furnace control board software reads the OFF position as an active sensor. A sensor should be present for the corresponding sensor connector. Setting the DIP switch to ON disables the sensor position.

SECONDARY SENSOR REQUIREMENTS

Additional Line Sets

If additional refrigerant line joints are present outside of the line set sleeve and a secondary refrigerant detection sensor is required, its installation must comply with the requirement listed in Refrigeration Detection Sensor kit (27V53). See FIGURE 53 for routing the secondary sensor cable through the furnace cabinet.

Non-Low GWP Applications

⚠ WARNING

For Furnace only applications or Furnace replacement in a Non-Low GWP applications, the LOW GWP sensors should be disabled, otherwise the blower will operate continuously. To do this, the Low GWP Dip switches setting for both – Sensor 1 and the Sensor 2 must be moved to the ON position.

FURNACE CONTROL BOARD LOW GWP MODES OF OPERATION

The modes of operation for the furnace control board are Initializing, Normal, Leak Detected, and Fault.

Initializing

The furnace control board is establishing connection with the refrigerant detection sensor and is completing an initial five-minute purge sequence.

Normal

The HVAC system is functioning normally. The furnace control board has not detected a refrigerant leak.

Leak Detected

When the furnace control board detects a refrigerant leak:

1. The furnace control board shuts off the (R) input (24VAC power) to the thermostat, which de-energizes the outdoor unit compressor and heat sources, such as gas and/or electric strip heat. No heating or cooling demands will be met.
2. The furnace control board activates the blower (high speed). The blower purges refrigerant from the cabinet, plenum, and ductwork.
3. After the furnace control board determines the refrigerant levels are below the safety threshold, the blower will continue to operate for the remainder of the seven (7) -minute cycle.
4. After the blower sequence is complete, the HVAC system resumes normal operation.

NOTE - *The HVAC system may not maintain a cooling or heating set point if a significant leak exists. Any refrigerant leaks that remain unaddressed for an extended time may cause the HVAC system to shut down on a low refrigerant pressure limit condition.*

Fault

When a Low GWP fault is detected by the furnace control board, the indoor unit blower engages and remains engaged at a constant air flow output until the fault is cleared.

NOTE - *See "DIAGNOSTIC CODES / STATUS OF FURNACE" on page 45 for Low GWP diagnostic error codes.*

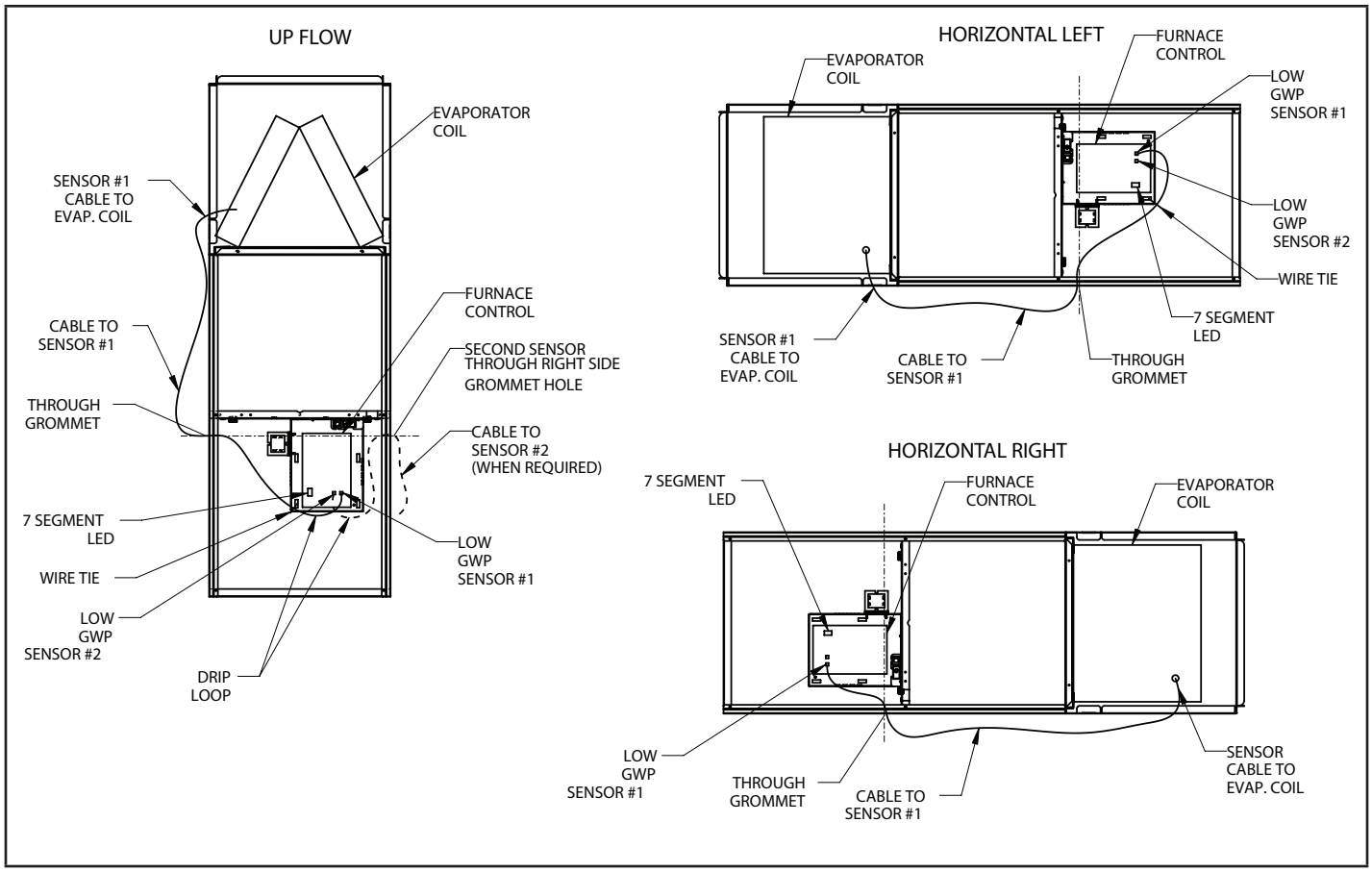

Figure 66

LGWP TEST BUTTON FUNCTIONALITY

The furnace control board is equipped with a Test/Reset push button. The Test button can be used to perform several functions, depending on the mode of operation of the furnace control board.

TABLE 25 lists the functions of the Test button during each mode of operation.

TABLE 25

LGWP Test Button Function

Mode of Operation	Press the Test Button to:
Normal	Trigger a leak detection response. Verify all equipment is wired correctly into the furnace blower control board (after installation).
Leak Detected	Reset the furnace control board to a normal mode of operation after a previous leak has been detected and purged from the HVAC system
Fault	Reset the furnace control board after troubleshooting and resolving a fault condition. If the fault is not resolved, the furnace control board will enter the Fault mode again.

LGWP Test Button - Additional Functions

TABLE 26 lists the additional functions of the Test Button while the furnace control board is functioning within the states of Initializing, Monitoring, Leak Detection, Servicing and Fault.

TABLE 26

Additional Button Functions

State	Press	Action
Initializing	Short	Skips remaining pre-purge after sensors are recognized by the furnace control board
Initializing	Long	Reset control
Monitoring	Short	Clear purge-counter if prior mitigation has occurred; Test mitigation
Monitoring	Long	Reset control
Mitigating	Short	If testing mitigation, end test
Servicing	Short	Reevaluate fault condition - if cleared return to monitoring, otherwise update indicator
Servicing	Long	Reset control
Fault	Short	Reevaluate fault condition - if cleared return to monitoring, otherwise update indicator
Fault	Long	Reset control

External Alarm

(*For applications with external alarms wired directly to the furnace control board*)

The furnace control board triggers the external alarm system when it enters Leak Detected mode. For alarm notifications, the furnace control board provides a dry relay contact that is rated 3A at 30 VAC/DC.

THERMOSTAT COMPATIBILITY

Thermostats that preserve memory settings are compatible with the furnace control board. Examples include:

- Battery-powered thermostats
- Analog Thermostat
- Late-model programmable thermostats

NOTE - *Early-generation digital and programmable thermostats may not retain the operation mode and temperature setpoints after a power outage.*

The following scenarios are likely to occur when home occupants are not available to adjust the thermostat setpoints as the system is recovering from leak detection and resuming normal operation:

- Heating could be lost during a cold night
- Cooling could be lost during a hot day
- The thermostat could reset to an incorrect temperature setpoint

START UP PROCEDURE

The furnace control board is equipped with a LGWP Test/Reset button, see Test Button Functionality. After the furnace control board has been mounted and wired, restore power to the HVAC system. The system will then run through a purge sequence for five minutes. After the purge sequence is complete, proceed to testing cooling demand and heating demand.

Cooling Demand

1. Prompt a cooling demand at the thermostat.
2. Press the LGWP Test button on the furnace control board.

   The system then executes a leak detection response.
3. Observe the following sequence:
   a. The LED indicator for leak detection. *See “DIAGNOSTIC CODES / STATUS OF FURNACE” on page 45 for Low GWP diagnostic error codes.*.
   b. The blower powers up.
   c. The outdoor compressor powers down.
4. Press the LGWP Test button to terminate the simulated Leak Detected mode upon test completion
5. ***Heating Demand***

1. Prompt a heating demand at the thermostat.
2. Observe the following sequence:
   a. The LED indicator for leak detection. *See “DIAGNOSTIC CODES / STATUS OF FURNACE” on page 45 for Low GWP diagnostic error codes.*.
   b. The blower powers up.
   c. The gas burners power down.
   d. The outdoor compressor powers down.
3. Press the LGWP Test button to terminate the simulated Leak Detected mode upon test completion.

Installation of control is complete after both sequences are succefull.

Unit Start Up

FOR YOUR SAFETY READ BEFORE OPERATING

⚠ WARNING

Do not use this furnace if any part has been underwater. A flood-damaged furnace is extremely dangerous. Attempts to use the furnace can result in fire or explosion. Immediately call a qualified service technician to inspect the furnace and to replace all gas controls, control system parts, and electrical parts that have been wet or to replace the furnace, if deemed necessary.

⚠ WARNING

Danger of explosion. Can cause injury or product or property damage. If overheating occurs or if gas supply fails to shut off, shut off the manual gas valve to the appliance before shutting off electrical supply.

⚠ CAUTION

Before attempting to perform any service or maintenance, turn the electrical power to unit OFF at disconnect switch.

BEFORE LIGHTING the unit, smell all around the furnace area for gas. Be sure to smell next to the floor because some gas is heavier than air and will settle on the floor.

The gas valve on the EL297UHVK is equipped with a gas control switch (lever). Use only your hand to moveswitch. Never use tools. If the the switch will not move by hand, do not try to repair it. Force or attempted repair may result in a fire or explosion.

Placing the furnace into operation:

EL297UHVK units are equipped with an automatic hot surface ignition system. Do not attempt to manually light burners on this furnace. Each time the thermostat calls for heat, the burners will automatically light. The ignitor does not get hot when there is no call for heat on these units.

Priming Condensate Trap

The condensate trap should be primed with water prior to start-up to ensure proper condensate drainage. Either pour 10 fl. oz. (300 ml) of water into the trap, or follow these steps to prime the trap:

1 - Follow the lighting instructions to place the unit into operation.
2 - Set the thermostat to initiate a heating demand.
3 - Allow the burners to fire for approximately 3 minutes.
4 - Adjust the thermostat to deactivate the heating demand.
5 - Wait for the combustion air inducer to stop. Set the thermostat to initiate a heating demand and again allow the burners to fire for approximately 3 minutes.
6 - Adjust the thermostat to deactivate the heating demand and wait for the combustion air inducer to stop. At this point, the trap should be primed with sufficient water to ensure proper condensate drain operation.

⚠ WARNING

If you do not follow these instructions exactly, a fire or explosion may result causing property damage, personal injury or death.

Gas Valve Operation (Figure 67)

1 - **STOP!** Read the safety information at the beginning of this section.
2 - Set the thermostat to the lowest setting.
3 - Turn off all electrical power to the unit.
4 - This furnace is equipped with an ignition device which automatically lights the burners. Do not try to light the burners by hand.
5 - Remove the access panel.
6 - Move gas valve switch to OFF. See Figure 67.
7 - Wait five minutes to clear out any gas. If you then smell gas, STOP! Immediately call your gas supplier from a neighbor's phone. Follow the gas supplier's instructions. If you do not smell gas go to next step.
8 - Move gas valve switch to ON. See Figure 67.

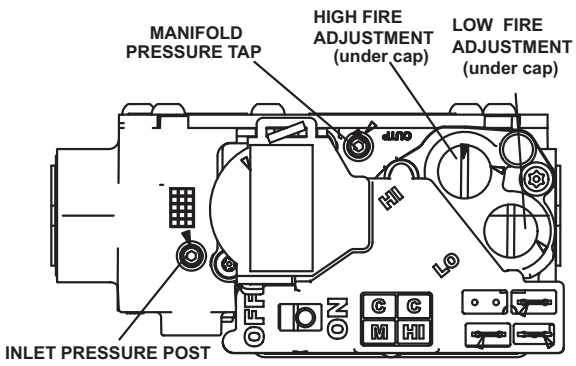

GAS VALVE SHOWN IN ON POSITION

Figure 67

9 - Replace the access panel.
10 - Turn on all electrical power to to the unit.
11 - Set the thermostat to desired setting.

NOTE - *When unit is initially started, steps 1 through 11 may need to be repeated to purge air from gas line.*

12 - If the appliance will not operate, follow the instructions "Turning Off Gas to Unit" and call your service technician or gas supplier.

Turning Off Gas to Unit

1 - Set the thermostat to the lowest setting.
2 - Turn off all electrical power to the unit if service is to be performed.
3 - Remove the access panel.

4 - Move gas valve switch to OFF.

5 - Replace the access panel.

Failure To Operate

If the unit fails to operate, check the following:

1 - Is the thermostat calling for heat?

2 - Are access panels securely in place?

3 - Is the main disconnect switch closed?

4 - Is there a blown fuse or tripped breaker?

5 - Is the filter dirty or plugged? Dirty or plugged filters will cause the limit control to shut the unit off.

6 - Is gas turned on at the meter?

7 - Is the manual main shut-off valve open?

8 - Is the internal manual shut-off valve open?

9 - Is the unit ignition system in lockout? If the unit locks out again, inspect the unit for blockages.

Gas Pressure Adjustment

Gas Flow (Approximate)

TABLE 27				
GAS METER CLOCKING CHART				
EL297K Unit	Seconds for One Revolution			
	Natural		LP	
	1 cu ft Dial	2 cu ft Dial	1 cu ft Dial	2 cu ft Dial
-045	80	160	200	400
-070	55	110	136	272
-090	41	82	102	204
-110	33	66	82	164
-135	27	54	68	136
Natural-1000 btu/cu ft LP-2500 btu/cu ft				

Furnace should operate at least 5 minutes before checking gas flow. Determine time in seconds for two revolutions of gas through the meter. (Two revolutions assures a more accurate time.) Divide by two and compare to time in TABLE 27. If manifold pressure matches TABLE 29 and rate is incorrect, check gas orifices for proper size and restriction. Remove temporary gas meter if installed.

NOTE - *To obtain accurate reading, shut off all other gas appliances connected to meter*

.**Supply Pressure Measurement**

An inlet post located on the gas valve provides access to the supply pressure. See Figure 67. Back out the 3/32 hex screw one turn, connect a piece of 5/16 tubing and connect to a manometer to measure supply pressure. See TABLE 29 for supply line pressure.

On multiple unit installations, each unit should be checked separately, with and without units operating. Supply pressure must fall within range listed in TABLE 29.

Manifold Pressure Measurement

NOTE - *Pressure test adapter kit (10L34) is available from Lennox to facilitate manifold pressure measurement.*

A manifold pressure post located on the gas valve provides access to the manifold pressure. See Figure 67. Back out the 3/32 hex screw one turn, connect a piece of 5/16 tubing and connect to a manometer to measure manifold pressure.

To correctly measure manifold pressure, the differential pressure between the positive gas manifold and the negative burner box must be considered.

1 - Connect the test gauge positive side “+“ to manifold pressure tap on gas valve as noted above.

2 - Tee into the gas valve regulator vent hose and connect to test gauge negative “-”.

3 - Ignite unit on low fire and let run for 5 minutes to allow for steady state conditions.

4 - After allowing unit to stabilize for 5 minutes, record manifold pressure and compare to value given in TABLE 29.

5 - If necessary, make adjustments. Figure 62 shows location of high fire and low fire adjustment screws.

6 - Repeat steps 3, 4 and 5 on high fire. See values in TABLE 29.

7 - Shut unit off and remove manometer as soon as an accurate reading has been obtained. Turn the supply and manifold 3/32” hex screws one revolution back into the gas valve.

8 - Start unit and perform leak check. Seal leaks if found.

Proper Cumbustion

Furnace should operate minimum 15 minutes with correct manifold pressure and gas flow rate before checking combustion. Take combustion sample beyond the flue outlet and compare to the table below.

TABLE 28

EL297K Model	CO_2% For Nat		CO_2% For L.P	
	Low Fire	High Fire	Low Fire	High Fire
045	5.4 - 6.4	7.5 - 8.5	6.4 - 7.4	8.8 - 9.8
070	5.3 - 6.3	7.4 - 8.4	6.3 - 7.3	8.7 - 9.7
090	5.8 - 6.8	7.6 - 8.6	6.8 - 7.8	8.9 - 9.9
110	6.1 - 7.1	8.0 - 9.0	7.1 - 8.1	9.3 - 10.3
135	6.1 - 7.1	7.8 - 8.8	7.1 - 8.2	9.1 - 10.1
The maximum carbon monoxide reading should not exceed 100ppm.				

High Altitude

NOTE - *In Canada, certification for installations at elevations over 4500 feet (1372 m) is the jurisdiction of local authorities.*

Units may be installed at altitudes up to 10,000 ft. above sea level. See TABLE 29 for de-rate manifold values. Units installed at altitude of 7501 - 10,000 feet require an orifice change. Units installed at altitude of 4501 - 10,000 feet require a pressure switch change which can be ordered separately. TABLE 30 lists conversion kit and pressure switch requirements at varying altitudes.

The combustion air pressure switch is factory-set and requiresno adjustment.

TABLE 29

Manifold and Supply Line Pressure 0-10,000ft.

Unit	Gas	Manifold Pressure in. wg.										Supply Line Pressure in. w.g 0 - 10,000 ft.	
		0 - 4500 ft		4501 - 5500 ft.		5501 - 6500 ft		6501 - 7500 ft		7501 - 10,000 ft			
		Low Fire	High Fire	Low Fire	High Fire	Low Fire	High Fire	Low Fire	High Fire	Low Fire	High Fire	Min	Max
All Sizes	Natuarl	1.7	3.5	1.6	3.3	1.5	3.2	1.5	3.1	1.7	3.5	4.5	13.0
	LP/ Propane	4.5	10.0	4.2	9.4	4.0	9.1	3.9	8.9	4.5	10.0	11.0	13.0

NOTE - A natural to L.P. propane gas changeover kit is necessary to convert this unit. Refer to the changeover kit installation instruction for the conversion procedure.

TABLE 30

LP/Propane Conversion Kit and Pressure Switch Requirements at Varying Altitudes

Unit	Natural to LP/Propane	High Altitude Natural Burner Orifice Kit	High Altitude LP/ Propane Burner Orifice Kit	High Altitude Pressure Switch	
	0 - 7500 ft	7501 - 10,000 ft	7501 - 10,000 ft	4501 - 7500 ft	7501 - 10,000 ft
045	*11K51	73W37	*11K46	14A51	14A53
070				14A48	14A54
090				14A54	14A53
110				25B93	14A45
135				25B94	25B95

*** Conversion requires installation of a gas valve manifold spring which is provided with the gas conversion kit. Pressure switch is factory set. No adjustment necessary. All models use the factory-installed pressure switch from 0-4500 feet (0-1370 m).**

Testing for Proper Venting and Sufficient Combustion Air for Non-Direct Vent Applications

⚠ WARNING

CARBON MONOXIDE POISONING HAZARD!

Failure to follow the steps outlined below for each appliance connected to the venting system being placed into operation could result in carbon monoxide poisoning or death.

The following steps shall be followed for each appliance connected to the venting system being placed into operation, while all other appliances connected to the venting system are not in operation.

After the EL297UHVK gas furnace has been started, the following test should be conducted to ensure proper venting and sufficient combustion air has been provided to the EL297UHVK as well as to other gas-fired appliances which are separately vented.

If a EL297UHVK furnace replaces a Category I furnace which was commonly vented with another gas appliance, the size of the existing vent pipe for that gas appliance must be checked. Without the heat of the original furnace flue products, the existing vent pipe is probably oversized for the single water heater or other appliance. The vent should be checked for proper draw with the remaining appliance.

The test should be conducted while all appliances (both in operation and those not in operation) are connected to the venting system being tested. If the venting system has been installed improperly, or if provisions have not been made for sufficient amounts of combustion air, corrections must be made as outlined in the previous section.

1 - Seal any unused openings in the venting system.

2 - Visually inspect the venting system for proper size and horizontal pitch. Determine there is no blockage or restriction, leakage, corrosion, or other deficiencies which could cause an unsafe condition.

3 - To the extent that it is practical, close all building doors and windows and all doors between the space in which the appliances connected to the venting system are located and other spaces of the building.

4 - Close fireplace dampers.

5 - Turn on clothes dryers and any appliances not connected to the venting system. Turn on any exhaust fans, such as range hoods and bathroom exhausts, so they will operate at maximum speed. Do not operate a summer exhaust fan.

6 - Follow the lighting instruction to place the appliance being inspected into operation. Adjust thermostat so appliance will operate continuously.

7 - Use the flame of match or candle to test for spillage of flue gases at the draft hood relief opening after 5 minutes of main burner operation.

8 - If improper venting is observed during any of the above tests, the venting system must be corrected or sufficient combustion/make-up air must be provided. The venting system should be re-sized to approach the minimum size as determined by using the appropriate tables in appendix G in the current standards of the National Fuel Gas Code ANSI-Z223.1/NPFA 54 in the U.S.A., and the appropriate Natural Gas and Propane appliances venting sizing tables in the current standard of the CSA-B149 Natural Gas and Propane Installation Codes in Canada.

9 - After determining that each appliance remaining connected to the common venting system properly vents when tested as indicated in step 3, return doors, windows, exhaust fans, fireplace dampers and any other gas-burning appliance to their previous condition of use.

Repair Parts

The following repair parts are available through Lennox dealers. When ordering parts, include the complete furnace model number listed on the CSA nameplate -- Example: EL297UHVK045P24BK-01. All service must be performed by a licensed professional installer (or equivalent), service agency, or gas supplier.

Cabinet Parts

- Outer access panel
- Blower access panel
- Top Cap

Control Panel Parts

- Transformer
- Integrated control board
- Door interlock switch

Blower Parts

- Blower wheel
- Motor
- Motor mounting frame
- Motor control
- Blower housing cutoff plate

Heating Parts

- Flame Sensor
- Heat exchanger assembly
- Gas manifold
- Combustion air inducer
- Gas valve
- Main burner cluster
- Main burner orifices
- Pressure switch
- Ignitor
- Primary limit control
- Flame rollout switches

Refrigerant Detection System Parts

- Refrigerant Detection Sensor
- Refrigerant Line Set Sleeve

Other Unit Adjustments

NOTE - *See troubleshooting flow charts if any safety* switches are found to be open.

Primary Limit.

The primary limit is located on the heating compartment vestibule panel. This limit is factory set and requires no adjustment.

Flame Rollout Switches (Two)

These manually reset switches are located on the front of the burner box.

Pressure Switch

The pressure switch is located in the heating compartment on the cold end header box. This switch checks for proper combustion air inducer operation before allowing ignition trial. The switch is factory-set and must not be adjusted.

Temperature Rise

Place the unit into operation with a second-stage heating demand. After supply and return air temperatures have stabilized, check the temperature rise. If necessary, adjust the heating blower speed to maintain the temperature rise within the range shown on the unit nameplate. See TABLE 31 on page 75 for allowable heating speeds. Increase the blower speed to decrease the temperature rise. Decrease the blower speed to increase the temperature rise. Failure to properly adjust the temperature rise may cause erratic limit operation.

Electrical

1 - Check all wiring for loose connections.

2 - Check for the correct voltage at the furnace (furnace operating). Correct voltage is 120VAC + 10%

3 - Check amp-draw on the blower motor with blower access panel in place.

Unit Nameplate_____Actual_____

Exhaust and Air Intake Pipe

1 - Check exhaust and air intake connections for tightness and to make sure there is no blockage.

2 - Is pressure switch closed? Obstructed exhaust pipe will cause unit to shut off at pressure switch. Check termination for blockages.

3 - Obstructed pipe or termination may cause rollout switches to open. Reset manual flame rollout switches on burner box assembly if necessary.

Heating Sequence of Operation

Electronic Ignition

The two-stage, variable speed integrated control used in EL297UHVK units has an added feature of an internal Watchguard control. The feature serves as an automatic reset device for ignition control lockout caused by ignition failure. After one hour of continuous thermostat demand for heat, the Watchguard will break and remake thermostat demand to the furnace and automatically reset the control to begin the ignition sequence.

NOTE - The ignition control thermostat selection DIP switch is factory-set in the "TWO-STAGE" position.

Applications Using a Two-Stage Thermostat

See Figure 68 for ignition control sequence

A - Heating Sequence -- Integrated Control Thermostat Selection DIP Switch 1 OFF in "Two-Stage" Position

(Factory Setting)

1 - On a call for heat, thermostat first-stage contacts close sending a signal to the integrated control. The integrated control runs a self-diagnostic program and checks high temperature limit switches for normally closed contacts and pressure switches for normally open contacts. The combustion air inducer is energized at low speed.

2 - Once the control receives a signal that the low pressure switch has closed, the combustion air inducer begins a 15-second pre-purge in low speed.

NOTE - *If the low fire pressure switch does not close the combustion air inducer will switch to high fire. After a 15 second pre-purge the high fire pressure switch will close and the unit will begin operation on high fire. After 10 to 20 seconds of high fire operation the unit will switch to low fire..*

3 - After the pre-purge is complete, a 20-second initial ignitor warm-up period begins. The combustion air inducer continues to operate at low speed.

4 - After the 20-second warm-up period has ended, the gas valve is energized on low fire (first stage) and ignition occurs. At the same time, the control module sends a signal to begin an indoor blower 30-second ON-delay. When the delay ends, the indoor blower motor is energized on the low fire heating speed, the HUM contacts close energizing the humidifier and 120V ACC terminal is energized. The furnace will continue this operation as long as the thermostat has a first-stage heating demand.

5 - If second-stage heat is required, the thermostat second- stage heat contacts close and send a signal to the integrated control. The integrated control initiates a 30-second second-stage recognition delay.

6 - At the end of the recognition delay, the integrated control energizes the combustion air inducer at high speed. The control also checks the high fire (second stage) pressure switch to make sure it is closed. The high fire (second stage) gas valve is energized and the indoor blower motor is energized for operation at the high fire heating speed.

7 - When the demand for high fire (second stage) heat is satisfied, the combustion air inducer is switched to the low-fire heating speed and the high-fire (second stage) gas valve is de-energized. The low-fire (first stage) gas valve continues operation. The indoor blower motor is switched to the low-fire heating speed.

8 - When the thermostat demand for low-fire (first stage) heat is satisfied, the gas valve is de-energized and the field-selected indoor blower off delay begins. The combustion air inducer begins a 5-second post-purge period.

9 - When the combustion air post-purge period is complete, the inducer and the HUM contacts are de-energized. The indoor blower is de-energized at the end of the off delay as well as the 120V ACC terminals.

Applications Using A Single-Stage Thermostat

See Figure 69 for ignition control sequence

B - Heating Sequence -- Integrated Control Thermostat Selection DIP Switch 1 ON in "Single-Stage" Position

NOTE - *In these applications, two-stage heat will be initiated by the integrated control if heating demand has not been satisfied after the field adjustable period (7 or 12 minutes).*

1 - On a call for heat, thermostat first-stage contacts close sending a signal to the integrated control. The integrated control runs a self-diagnostic program and checks high temperature limit switches for normally closed contacts and pressure switches for normally open contacts. The combustion air inducer is energized at low speed.

2 - Once the control receives a signal that the low pressure switch has closed, the combustion air inducer begins a 15-second pre-purge in low speed.

NOTE - *If the low fire pressure switch does not close the combustion air inducer will switch to high fire. After a 15 second pre-purge the high fire pressure switch will close and the unit will begin operation on high fire. After 10 to 20 seconds of high fire operation the unit will switch to low fire.*

3 - After the pre-purge is complete, a 20-second initial ignitor warm-up period begins. The combustion air inducer continues to operate at low speed.

4 - After the 20-second warm-up period has ended, the gas valve is energized on low fire (first stage) and ignition occurs. At the same time, the control module sends a signal to begin an indoor blower 30-second ON-delay. When the delay ends, the indoor blower motor is energized on the low fire heating speed and the HUM contacts are energized. The integrated control also initiates a second-stage on delay (factory-set at 7 minutes; adjustable to 12 minutes).

5 - If the heating demand continues beyond the secondstage on delay, the integrated control energizes the combustion air inducer at high speed. The control also checks the high fire (second stage) pressure switch to make sure it is closed. The high fire (second stage) gas valve is energized and the indoor blower motor is energized for operation at the high fire heating speed.

6 - When the thermostat heating demand is satisfied, the combustion air inducer begins a 5-second low speed post-purge. The field-selected indoor blower off delay begins. The indoor blower operates at the low-fire heating speed.

7 - When the combustion air post-purge period is complete, the inducer and the HUM contacts are de-energized. The indoor blower is de-energized at the end of the off delay as well as the 120V ACC terminals.

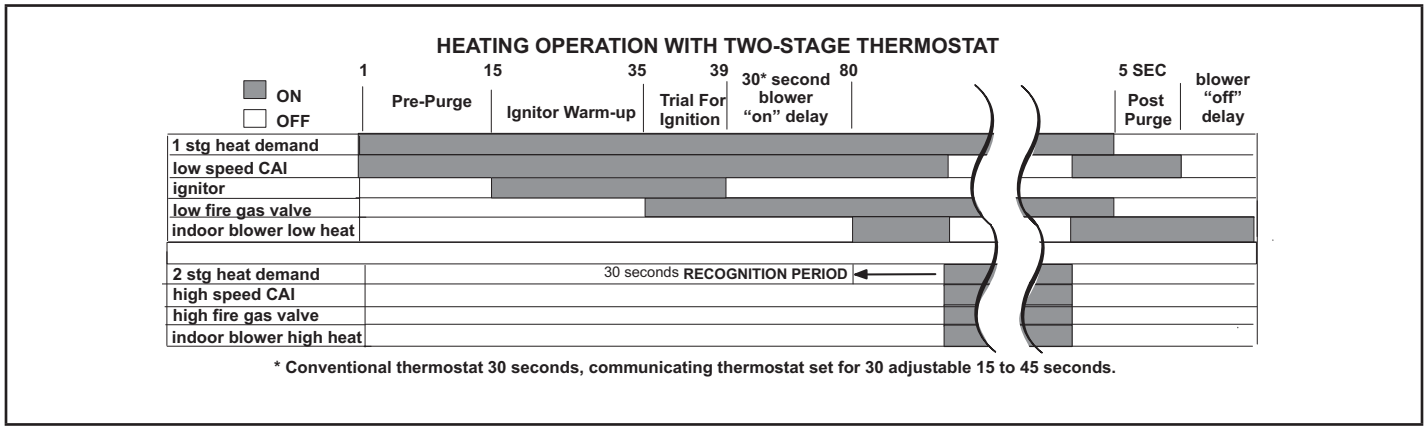

Figure 68

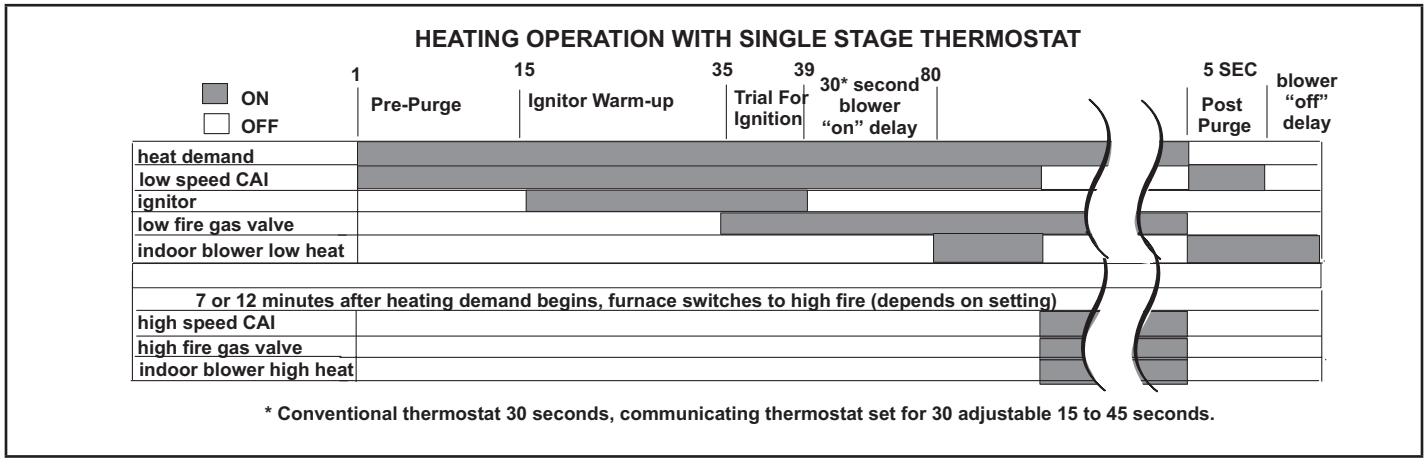

Figure 69

⚠ WARNING

ELECTRICAL SHOCK, FIRE,
OR EXPLOSION HAZARD.

Failure to follow safety warnings exactly could result in dangerous operation, serious injury, death or property damage.

Improper servicing could result in dangerous operation, serious injury, death, or property damage. Before servicing, disconnect all electrical power to furnace.

When servicing controls, label all wires prior to disconnecting. Take care to reconnect wires correctly. Verify proper operation after servicing.

⚠ WARNING

The blower access panel must be securely in place when the blower and burners are operating. Gas fumes, which could contain carbon monoxide, can be drawn into living space resulting in personal injury or death.

Annual Furnace Maintenance

At the beginning of each heating season, and to comply with the **Lennox Limited Warranty,** your system should be checked as follows:

1 - Check wiring for loose connections, voltage at indoor unit and amperage of indoor motor.

2 - Check the condition of the belt and shaft bearings if applicable.

3 - Inspect all gas pipe and connections for leaks.

4 - Check the cleanliness of filters and change if necessary (monthly).

5 - Check the condition and cleanliness of burners and heat exchanger and clean if necessary.

6 - Check the cleanliness of blower assembly and clean the housing, blower wheel and blower motor if necessary.

7 - Inspect the condensate drain and trap for leaks and cracks. The drain and trap must also be cleaned and the trap must be primed with water. Inspect the rubber hoses connected to the pressure switches for cracks or loose connections, replace as necessary. Remove the rubber hoses from the cold end header box and inspect for any blockage, clean as needed. If strainers are installed in the hoses remember to remove and clean before reinstalling the hoses.

8 - Evaluate the heat exchanger integrity by inspecting the heat exchanger per the AHRI heat exchanger inspection procedure. This procedure can be viewed at www.ahrinet.org.

9 - Ensure sufficient combustion air is available to the furnace. Fresh air grilles and louvers (on the unit and in the room where the furnace is installed) must be properly sized, open and unobstructed to provide combustion air.

10 - Inspect the furnace intake and exhaust pipes to make sure they are in place, structurally sound, without holes, blockage or leakage and the exhaust pipe is sloped toward the furnace. Inspect terminations to ensure they are free of obstructions and are structurally sound. Inspect the furnace return air duct connection to ensure the duct is sealed to the furnace. Check for air leaks on supply and return ducts and seal where necessary.

11 - Inspect the furnace return air duct connection to ensure the duct is sealed to the furnace. Check for air leaks on supply and return ducts and seal where necessary.

12 - Check the condition of the furnace cabinet insulation and repair if necessary.

13 - Perform a complete combustion analysis during the furnace inspection to ensure proper combustion and operation. Consult Service Literature for proper combustion values.

14 - Verify operation of CO detectors and replace batteries as required.

15 - Inspect the Low GWP sensor / sensors and rubber sleeve

Perform a general system test. Turn on the furnace to check operating functions such as the start-up and shut-off operation.

1 - Check the operation of the ignition system, inspect and clean flame sensor. Check microamps before and after. Check controls and safety devices (gas valve, flame sensor, temperature limits). Consult Service Manual for proper operating range. Thermal Limits should be checked by restricting airflow and not disconnecting the indoor blower. For additional details, please see Service and Application Note H049.

2 - Verify that system total static pressure and airflow settings are within specific operating parameters.

3 - Clock gas meter to ensure that the unit is operating at the specified firing rate for each stage of operation. Check the supply pressure and the manifold pressure on both low fire and high fire. If manifold pressure adjustment is necessary, consult the Service Literature for unit specific information on adjusting gas pressure. Not all gas valves are adjustable. Verify correct temperature rise.

Winterizing and Condensate Trap Care

1 - Turn off power to the furnace.

2 - Have a shallow pan ready to empty condensate water.

3 - Remove the clean out cap from the condensate trap and empty water. Inspect the trap then reinstall the clean out cap.

Cleaning The Burner Assembly

If cleaning the burner assembly becomes necessary, follow the steps below:

1 - Turn off electrical and gas power supplies to furnace. Remove upper and lower furnace access panels.

2 - Disconnect the wires from the gas valve.

3 - Remove the burner box cover (if equipped).

4 - Disconnect the gas supply line from the gas valve. Remove gas valve/manifold assembly.

5 - Mark and disconnect sensor wire from the sensor. Disconnect wires from flame rollout switches.

6 - Disconnect combustion air intake pipe. It may be necessary to cut the existing pipe to remove burner box assembly.

Remove four screws which secure burner box assembly to vest panel. Remove burner box from the unit.

7 - Use the soft brush attachment on a vacuum cleaner to gently clean the face of the burners. Visually inspect the inside of the burners and crossovers for any blockage caused by foreign matter. Remove any blockage.

8 - Reinstall the burner box assembly using the existing four screws. Make sure that the burners line up in the center of the burner ports.

9 - Reconnect the sensor wire and reconnect the 2-pin plug to the ignitor wiring harness. Reconnect wires to flame rollout switches.

10 - Reinstall the gas valve manifold assembly. Reconnect the gas supply line to the gas valve. Reinstall the burner box cover.

11 - Reconnect wires to gas valve.

12 - Replace the blower compartment access panel.

13 - Refer to instruction on verifying gas and electrical connections when re-establishing supplies.

14 - Follow lighting instructions to light and operate furnace for 5 minutes to ensure that heat exchanger is clean and dry and that furnace is operating properly.

15 - Replace heating compartment access panel.

Program Unit Capacity/Size Mode

Power-Up - Number displayed represents by integrated control unit size code (furnace model and capacity). If three horizontal bars are displayed followed by continuous E203, furnace control does not recognize **unit size code.** Configure per the following:

Furnace control in **IDLE** mode No heating, cooling or indoor fan operation)

Yes

To enter **Program Unit Capacity/Size:** push and hold button next to 7-segment LED display until **solid "P"** symbol appears. Release button.

***IMPORTANT**: Field replacement controls may need to be manually configured to validate furnace unit size code.*

Solid **P** starts blinking on 7-Segment LED

Push and hold button. Integrated control will display unit size code number for each furnace model for three seconds.

No

Turn room thermostat to **OFF**

UNIT SIZE CODE	FURNACE MODEL
0	EL297UH045V36B
1	EL297UH070V36B
2	EL297UH090V36C
3	EL297UH090V48C
4	EL297UH090V60C
5	EL297UH110V48C
6	EL297UH110V60C
7	EL297UH135V60D

When the correct unit size code is displayed, release button. Selected code will flash for 10-second period. During that period, press and hold push button for 5 seconds. Integrated control will store code in memory and will automatically exit **Program Unit Capacity/Size Mode** and reset. (If second period expires or push button is held less than five seconds, control will automatically exit **Program Capacity/Size Mode** and go into **IDLE** mode without storing unit size code. If this happens, programming function must be repeated).

Verify that the selected unit size code is correct and stored in non-volatile memory by cycling the 24 volt power to the furnace control. (At 24 volt power-up of the furnace control, the 7-segment LED will display a unit size code. If three horizontal bars display, board does not recognize unit size code. Programming function must be repeated)

FINISHED

Modifications to NFPA-54, Chapter 10

Revise NFPA-54 section 10.8.3 to add the following requirements:

For all side wall, horizontally vented, gas-fueled equipment installed in every dwelling, building or structure used in whole or in part for residential purposes, including those owned or operated by the Commonwealth and where the side wall exhaust vent termination is less than seven (7) feet above the finished grade in the area of the venting, including but not limited to decks and porches, the following requirements shall be satisfied:

1 - INSTALLATION OF CARBON MONOXIDE DETECTORS. At the time of installation of the side wall, horizontally vented, gas-fueled equipment, the installing plumber or gasfitter shall observe that a hard-wired carbon monoxide detector with an alarm and battery backup is installed on the floor level where the gas equipment is to be installed. In addition, the installing plumber or gasfitter shall observe that a battery-operated or hard-wired carbon monoxide detector with an alarm is installed on each additional level of the dwelling, building or structure served by the side wall, horizontally vented, gas-fueled equipment. It shall be the responsibility of the property owner to secure the services of qualified licensed professionals for the installation of hard-wired carbon monoxide detectors.

a. In the event that the side wall, horizontally vented, gas-fueled equipment is installed in a crawl space or an attic, the hard-wired carbon monoxide detector with alarm and battery back-up may be installed on the next adjacent floor level.

b. In the event that the requirements of this subdivision cannot be met at the time of completion of installation, the owner shall have a period of thirty (30) days to comply with the above requirements; provided, however, that during said thirty (30) day period, a battery-operated carbon monoxide detector with an alarm shall be installed.

2 - APPROVED CARBON MONOXIDE DETECTORSach carbon monoxide detector as required in accordance with the above provisions shall comply with NFPA 720 and be ANSI/UL 2034 listed and IAS certified.

3 - SIGNAGE. A metal or plastic identification plate shall be permanently mounted to the exterior of the building at a minimum height of eight (8) feet above grade directly in line with the exhaust vent terminal for the horizontally vented, gas-fueled heating appliance or equipment. The sign shall read, in print size no less than one-half (1/2) inch in size, “GAS VENT DIRECTLY BELOW. KEEP CLEAR OF ALL OBSTRUCTIONS

4 - INSPECTION. The state or local gas inspector of the side wall, horizontally vented, gas-fueled equipment shall not approve the installation unless, upon inspection, the inspector observes carbon monoxide detectors and signage installed in accordance with the provisions of 248 CMR 5.08(2)(a) 1 through 4.

EXEMPTIONS: The following equipment is exempt-from 24 CMR 5.08(2)(a) 1 through 4:

1 - The equipment listed in Chapter 10 entitled “Equipment Not Required to Be Vented” in the most current edition of NFPA 54 as adopted by the Board; and

2 - Product Approved side wall, horizontally vented, gasfueled equipment installed in a room or structure separate from the dwelling, building or structure used in whole or in part for residential purposes.

MANUFACTURER REQUIREMENTS - GAS EQUIPMENT VENTING SYSTEM PROVIDED.

When the manufacturer of Product Approved side wall, horizontally vented, gas-fueled equipment provides a venting system design or venting system components with the equipment, the instructions provided by the manufacturer for installation of the equipment and the venting system shall include:

1 - Detailed instructions for the installation of the venting system design or the venting system components: and

2 - A complete parts list for the venting system design or venting system.

MANUFACTURER REQUIREMENTS -

GAS EQUIPMENT VENTING SYSTEM NOT PROVIDED.

When the manufacturer of Product Approved side wall, horizontally vented, gas-fueled equipment does not provide the parts for venting the flue gases, but identifies “special venting systems,” the following requirements shall be satisfied by the manufacturer:

1 - The referenced “special venting system” instructions shall be included with the appliance or equipment installation instructions; and

2 - The “special venting systems” shall be Product Approved by the Board, and the instructions for that system shall include a parts list and detailed installation instructions.

A copy of all installation instructions for all Product Approved side wall, horizontally vented, gas-fueled equipment, all venting instructions, all parts lists for venting instructions, and/or all venting design instructions shall remain with the appliance or equipment at the completion of the installation.

ADDENDUM FOR ALL PROVINCES OF CANADA

See below for venting in all provinces of Canada. Lennox approves the following termination for use in all provinces of Canada.

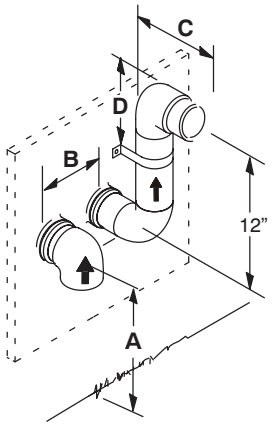

	2” (51MM) Vent Pipe	3” (76MM) Vent Pipe
A – Clearance above grade or average snow accumulation	12” (305 mm) Min.	12” (305 mm) Min.
B – Horizontal separation between intake and exhaust	6” (152 mm) Min. 24” (610 mm) Max.	6” (152 mm) Min. 24” (610 mm) Max.
C – Exhaust pipe length	Per: Saskatchewan Code of Practice	
D – Wall support distance from top of each pipe (intake/exhaust)	6” (152 mm) Max.	6” (152 mm) Max.

NOTE – Flue gas may be acidic and may adversely affect some building materials. If flue gases impinge on the building materials, a corrosion–resistant shield should be used to protect the wall surface. The shield should be constructed using wood, sheet metal or other suitable material. All seams, joints, cracks, etc. in affected area, should be sealed using an appropriate sealant.

TABLE 31

Allowable Heating Speeds								
EL297UH Model	-18%	-12%	-6%	Default	+6%	+12%	+18%	+24%
045XV36BK	Allowed	Alloweed	Allowed	Factory Setting	Allowed	Allowed	Allowed	Allowed
070XV36BK								
090XV36CK								
090XV48CK								
090XV60CK								
110XV48CK							Not Allowed	Not Allowed
110XV60CK							Allowed	Allowed
135XV60DK							Not Allowed	Not Allowed

TABLE 32

Allowable Circulation Speeds		
EL297UHK Model Number	28% (second stage cool)	38% (second stage cool)
All Models	Allowed	Factory Setting

FOR THE PROVINCE OF ONTARIO, HORIZONTAL SIDEWALL VENT APPLICATIONS ONLY

For exterior horizontal venting applications, the 2” X 1.5” reducer for 2” venting at the point where the exhaust pipe exits the structure is not required in direct or nondirect vent applications in the Province of Ontario. In these applications, the vent should be oriented such that the exhaust plume is unobjectionable. If the installation requires more separation between the flue gases and the building structure, a reducer may be installed on the exhaust pipe to increase the flue gas velocity.

LENNOX

UNIT SET UP
(typical)

Furnace:
Model Number_____

Serial Number_____

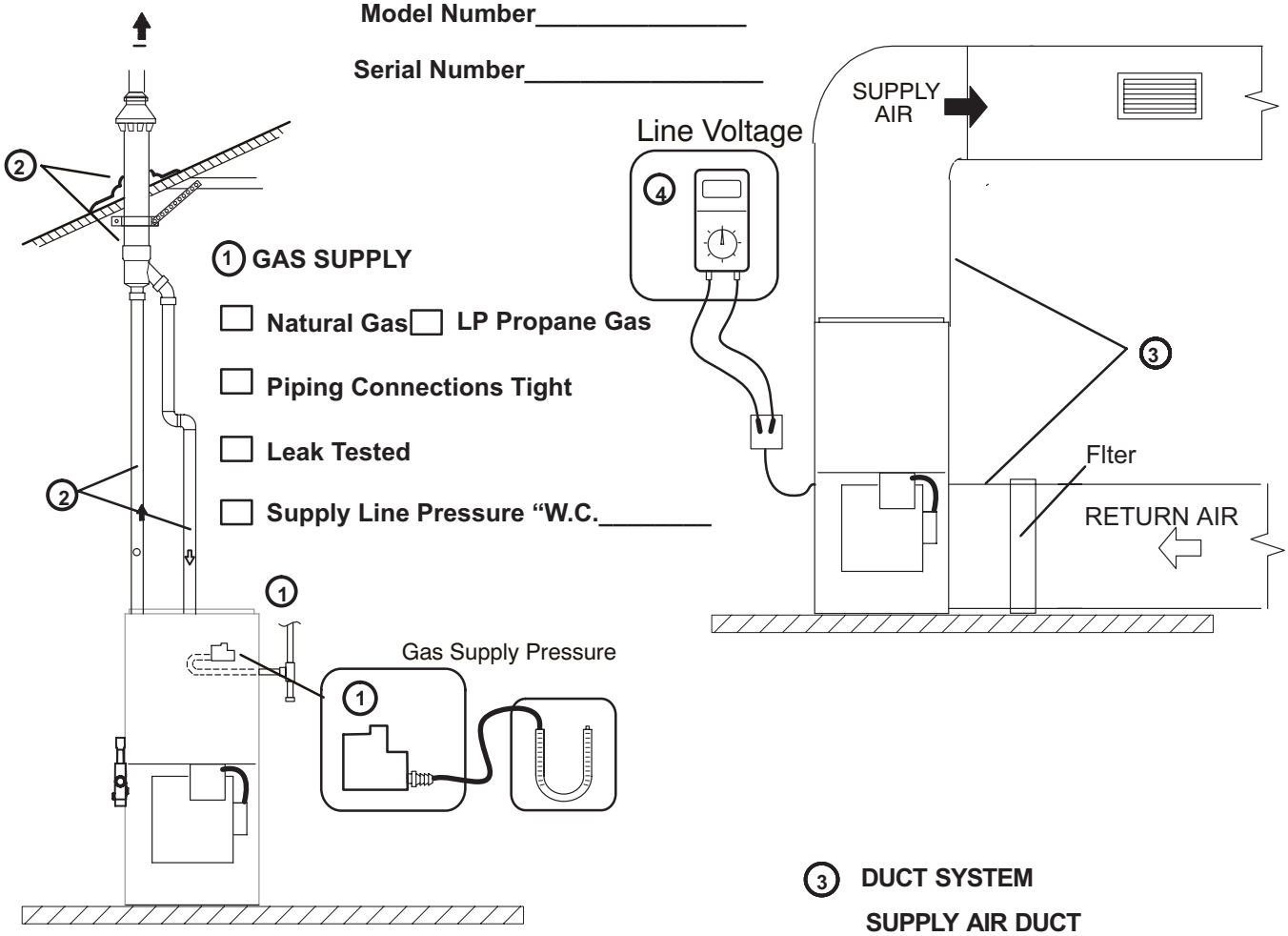

1 GAS SUPPLY

☐ **Natural Gas** ☐ **LP Propane Gas**

☐ **Piping Connections Tight**

☐ **Leak Tested**

☐ **Supply Line Pressure "W.C._____**

2 INTAKE / EXHAUST PIPE

☐ **All Joints Primed and Glued**

☐ **Terminations Installed Properly**

☐ **Horizontal Pipes Sloped (if applicable)**

☐ **Condensate Trap Primed / Line Sloped**

☐ **Pipes Supported**

☐ **Heat Cable Installed and Operable (if applicable)**

3 DUCT SYSTEM

SUPPLY AIR DUCT

☐ **Sealed**

☐ **Insulated (if necessary)**

RETURN DUCT

☐ **Sealed**

☐ **Filter Installed and Clean**

☐ **Grilles Unobstructed**

4 VOLTAGE CHECK
Supply Voltage _____

LENNOX

UNIT OPERATION

HEATING MODE

1. GAS MANIFOLD PRESSURE "W.C._____
2. COMBUSTION SAMPLE CO_2%_____CO PPM_____
3. INDOOR BLOWER AMPS_____
4. TEMPERATURE RISE
   - Supply Duct Temperature _____
   - Return Duct Temperature – _____
   - Temperature Rise = _____
5. TOTAL EXTERNAL STATIC
   - Supply External Static _____
   - Return External Static + _____
   - Total External Static = _____
6. CONDENSATE LINE
   - ☐ Leak Free
7. VENT PIPE
   - ☐ Leak Free

COOLING MODE

3. INDOOR BLOWER AMPS_____
4. TEMPERATURE DROP
   - Return Duct Temperature _____
   - Supply Duct Temperature – _____
   - Temperature Drop = _____
5. TOTAL EXTERNAL STATIC (dry coil)
   - Supply External Static _____
   - Return External Static + _____
   - Total External Static = _____
8. DRAIN LINE
   - ☐ Leak Free
9. THERMOSTAT
   - ☐ Adjusted and Programmed
   - ☐ Explained Operation to Owner

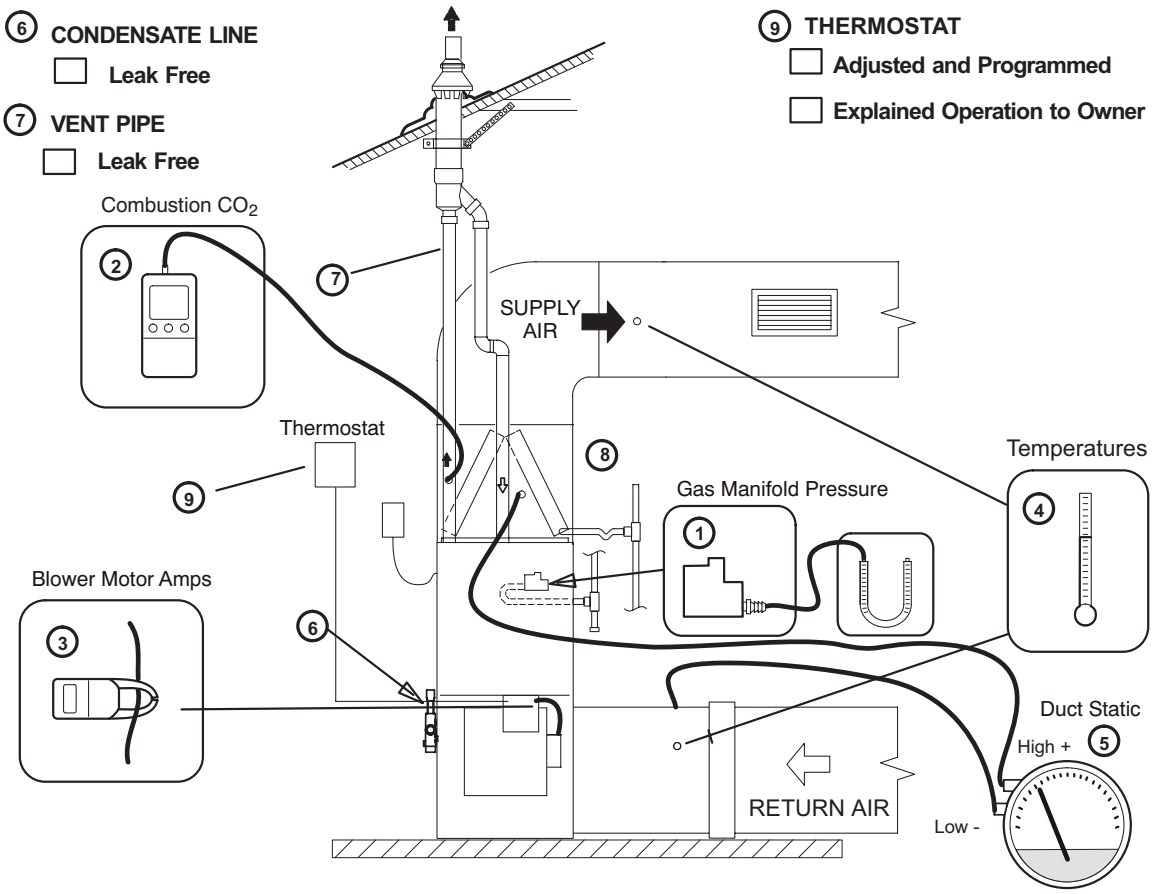

Contractor's: Name_____Telephone_____Checklist Completed_____

Job Address_____-_____Technician's Name_____