© 2026

506202-04
10/2026
Supersedes 2/2026

ENTHALPY SENSOR KIT

INSTALLATION INSTRUCTIONS FOR ENTHALPY SENSOR KIT (603364-35; 21Z09) USED WITH ECONOMIZERS

Shipping and Packing List

Package 1 of 1 contains:

1- Sensor

2- #6-32 X 7/8” Screws

1- P104 Wiring harness (used for outdoor air sensing only)

1- P105 Wiring harness (used for return air sensing only)

1- J105 Wiring harness (KG/KC/KH092-300S only)

1- Bracket (LG/LC/LH/LD/KG/KC/KH 078-152 units only)

1- A7 Bracket (LG/LC/LH/LD 078-152 units only)

1- Wire tie

2- #10-16 X 5/8” SDST screw

IMPORTANT - Two kits must be installed if differential enthalpy sensing is specified.

Check packaging for shipping damage. Contact the last carrier immediately if any shipping damage is found.

Application

Sensors provide input to determine free cooling suitability. The enthalpy sensor provided in this kit senses both sensible temperature and humidity. See TABLE 1 for usage.

This kit applies to LGM/LCM, LGT/LCT/LHT/LDT, LGH/LCH, LGX/LCX/LHX, KG/KC/KH, ZG/ZC/ZH, SCH/SGH/SHH/SDH, QG/QH/QC unit standard performance economizers and, LGM/LCM/LGH/LCH high performance economizers. A separate kit is used for KG/KC/KH, ZG/ZC/ZH and QG/QH/QC high performance economizers.

Refer to economizer installation instructions.

NOTE - *Differential sensor applications must use the same two sensors.*

TABLE 1

No. Of Sensors	Outdoor Air Is Enabled For Free Cooling When:
1	OA enthalpy, A7, is less than free cooling set point (single enthalpy).
2	OA enthalpy, A7, is less than RA enthalpy, A62 (differential enthalpy).*

Install Sensors

NOTE - *Install the return air sensor before installing optional power exhaust dampers and gravity exhaust dampers. If gravity exhaust, power exhaust, or hoods are already installed, remove from unit.*

1 - Disconnect all power to unit.

2 - Remove unit top back panel and retain screws. If economizer is already installed, remove hood.

3 - Install sensors as shown in TABLE 2.

TABLE 2

Sensors	Unit	Kit Harness Used:	Sensor Location
1	LG/LC/LH/LD 024-074	P104	FIGURE 1
	KG/KC/KH 024-090	None*	
2	LG/LC/LH/LD 024-074	P104, P105**	
	KG/KC/KH 024-090	*P105, J105	
1	LG/LC/LH/LD 078-152	P104	FIGURE 2 and FIGURE 4
	KG/KC/KH 090-150	None*	
2	LG/LC/LH/LD 078-152	P104, P105**	
	KG/KC/KH 090-150	*P105, J105	
1	LG/LC/LH/LD 156-300	P104	FIGURE 3
	KG/KC/KH 156-300	None**	
2	LG/LC/LH/LD 156-300	P104, P105*	
	KG/KC/KH 156-300	*P105, J105	
1	ZG/ZC/ZH	None*	FIGURE 5
2	***ZG/ZC/ZH	NA	NA
1	QG/QC/QH	None	FIGURE 6
2	***QG/QC/QH	N/A	NA
2	SC/SG/SH/SD 036-060	P104, P105	FIGURE 10
2	SC/SG/SH/SD 092-240	P104, P105	FIGURE 11

*P104 not used; disconnect S175, reconnect to A7.

**J105 provided in unit.

***Differential enthalpy not available with ZG/ZC/ZH/QG/QC/QH units.

⚠WARNING

To prevent serious injury or death:

1. Lock-out/tag-out before performing maintenance.

2. If system power is required (e.g., smoke detector maintenance), disable power to blower, remove fan belt where applicable, and ensure all controllers and thermostats are set to the "OFF" position before performing maintenance.

3. Always keep hands, hair, clothing, jewelry, tools, etc., away from moving parts.

⚠WARNING

Improper installation, adjustment, alteration, service or maintenance can cause property damage, personal injury or loss of life. Installation and service must be performed by a qualified installer, service agency or the gas supplier

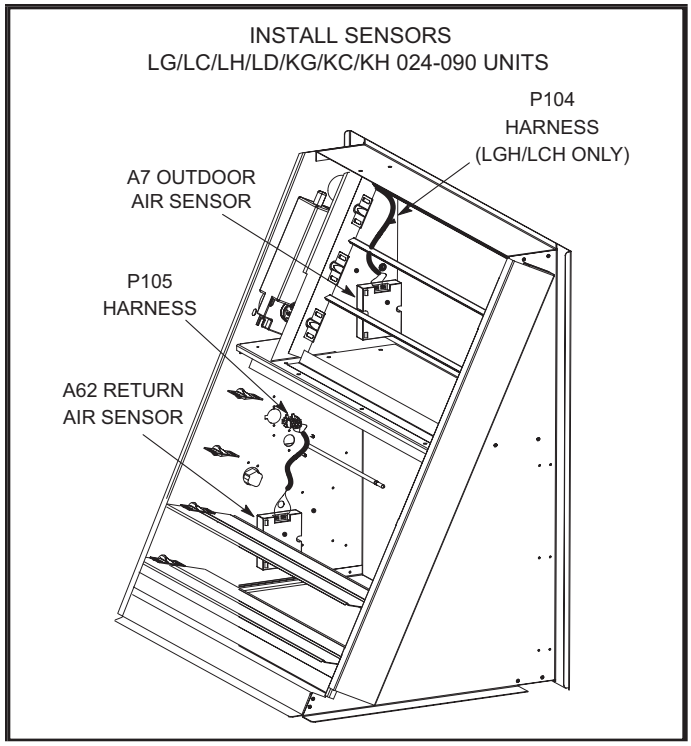

FIGURE 1

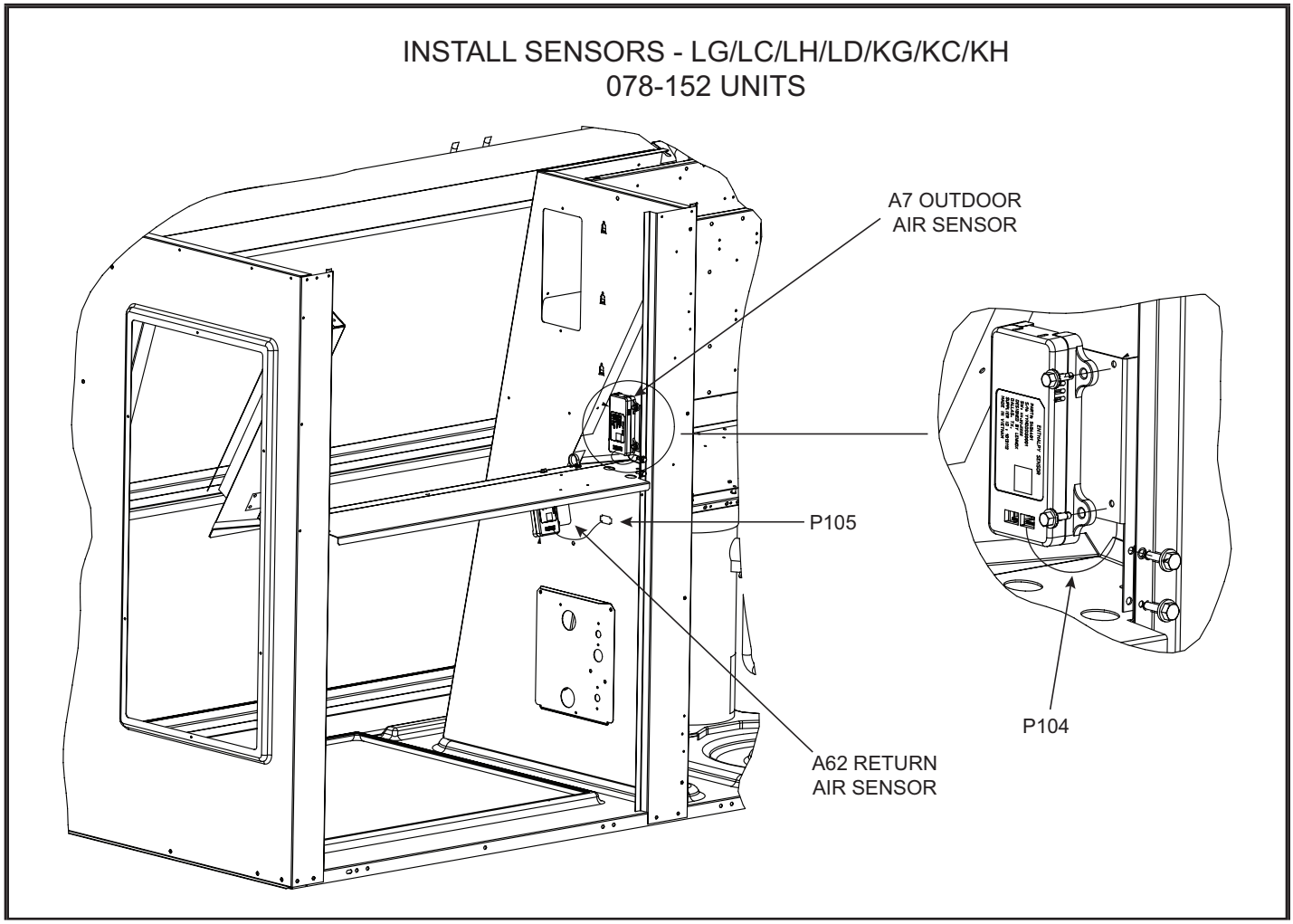

FIGURE 2

⚠CAUTION

As with any mechanical equipment, contact with sharp sheet metal edges can result in personal injury. Take care while handling this equipment and wear gloves and protective clothing.

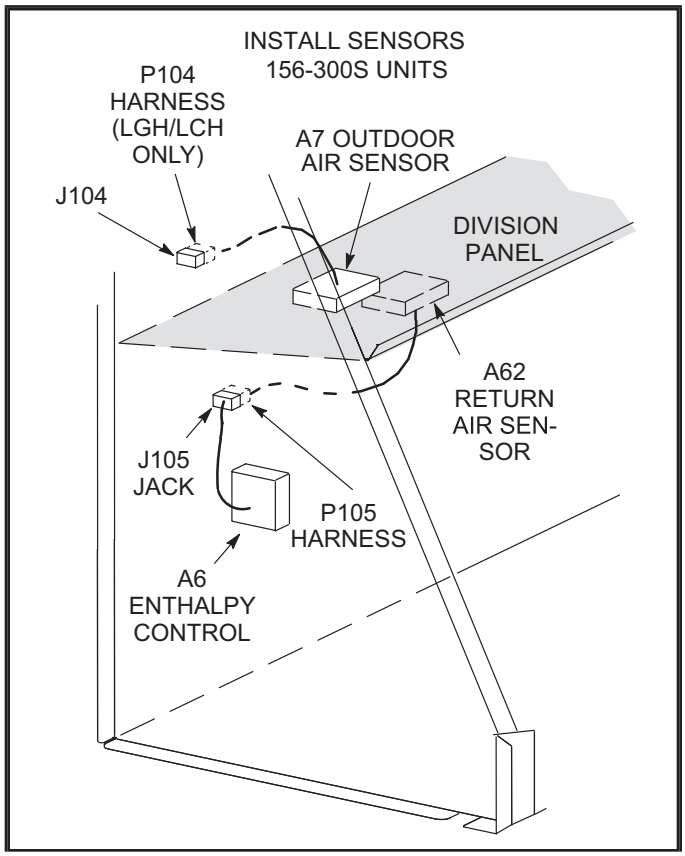

FIGURE 3

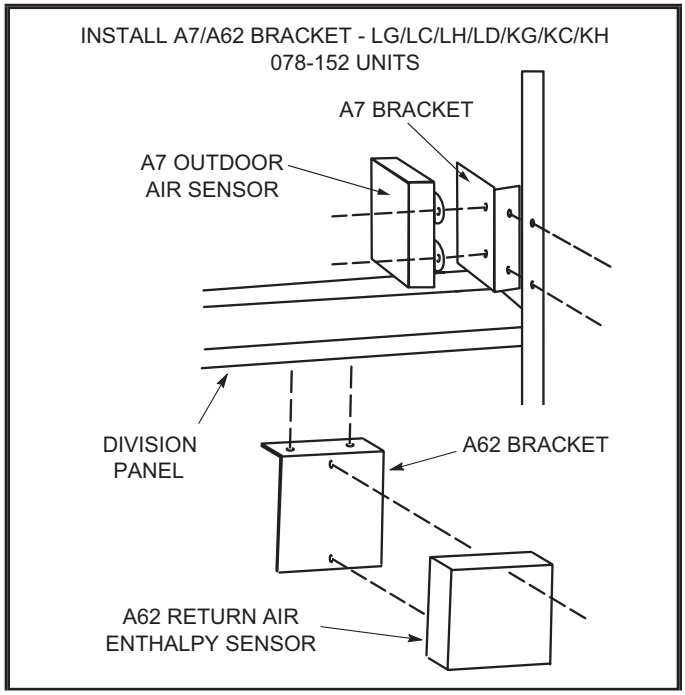

FIGURE 4

INSTALL SENSOR - ZG/ZC/ZH 036-150 UNITS

1- Remove factory-installed S175 outdoor air sensible sensor and bracket.*

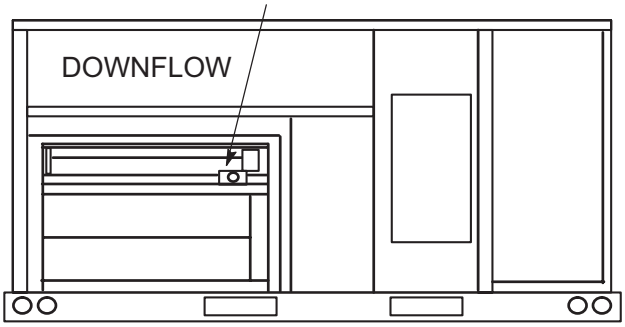

*036-060 SHOWN; 092-150 SIMILAR

2- Disconnect wiring to S175 and reconnect to A7 enthalpy sensor.

3- Install A7 enthalpy sensor using S175 bracket holes. Secure with screws provided in kit.

Note - All contents of kit may be discarded except for the sensor and screws. Harnesses are not used in this application.

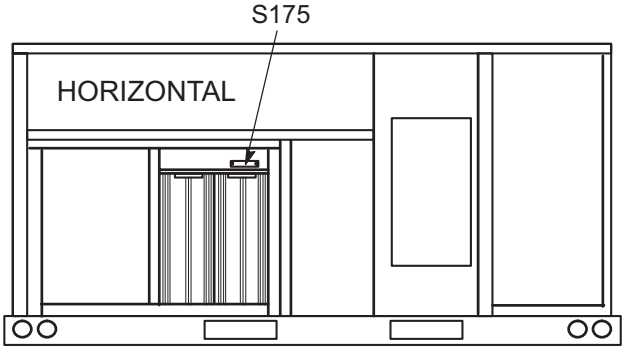

FIGURE 5

Wire A7 Sensor

NOTE - *S175 is factory-installed and wired in KG/KC/KH/ZG/ZC/ZH/LGX/LCX/LHX 024-300S economizers. Kit P104 harness is not used. When replacing S175 with an A7 enthalpy sensor, wire A7 with disconnected S175 wires.*

1 - Connect P104 harness plug to unit J104. See FIGURE 1 for 024-090 units, FIGURE 2 for 078-152 units, and FIGURE 3 for 156-300S units. On SC/SG/SH/SD see FIGURE 10 for 036-060, FIGURE 11 for 092-240.

NOTE - *Wiring to sensor is shown on D or D1 economizer wiring section. D or D1 is located on the compressor access panel or packaged with economizer.*

2 - Connect the wires on the other end of the harness to A7 terminals S and + as marked on the wires. Make sure polarity is correct.

INSTALL SENSOR - QG/QC/QH 036-150 UNITS

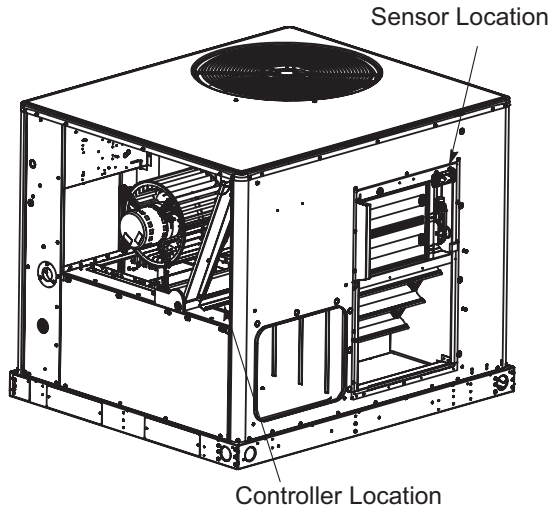

1- Install sensor in the location shown above.

2- Plug the red and black wires from the controllers "SO" and "SO+" terminals into the sensors + and - terminals.

3- Discard unused harnesses.

FIGURE 6

Wire A62 Sensor-LG/LC/LH/LD/KG/KC/KH/ SC/SG/SH/SD

NOTE - *Discard J105 harness provided in kit when installing LG/LC/LH/LD & SC/SG/SH/SD units.*

1 - Connect P105 harness plug to unit J105. See FIGURE 1 for 024-090 units, FIGURE 2 for 078-152 units, and FIGURE 3 for 156-300S units. On SC/SG/SH/SD see FIGURE 10 for 036-060, FIGURE 11 for 092-240.

On KG/KC/KH units refer to Wire A6 section in this instruction to install J105.

NOTE - *Wiring to sensor is shown on D or D1 economizer wiring section. D or D1 is located on the compressor access panel or packaged with economizer.*

2 - Connect the wires on the other end of the harness to A62 terminals S and + as marked on the wires. Make sure polarity is correct.

3 - Reinstall gravity exhaust damper, power exhaust, and outdoor air hood when applicable.

Wire A6 Control - KG/KC/KH Units Only

1 - Install J105 harness jack in panel as shown in FIGURE 8 for 024-090 units, FIGURE 9 for KG/KC/KH 090-150 units and FIGURE 3 for 180-300S units.

2 - Remove resistor between A6 enthalpy control terminals SR+ and SR. See FIGURE 7.

3 - Connect the two leads from the wire harness to SR+ and SR terminals on the A6 control. Note the labeling on the wires for correct wiring.

4 - Turn A6 control setpoint dial completely clockwise to position "D". See FIGURE 7.

Prodigy 2.0 M3 Unit Controller Configuration

Configure the Unit Controller for the enthalpy sensor using the following menu:

Go to SETUP / INSTALL and navigage through the various setup questions until Configuration ID 1 appears. Position two needs to be set to either S for economizer - single enthalpy or D for economizer - dual enthalpy.

Prodigy M4 Unit Controller Configuration

Configure the unit through the mobile app. Go to SETUP / RTU Menu > Setup Install and navigate through the various setup questions until Configuration ID 1 appears. Position two needs to be set to either S for economizer - single enthalpy or D for economizer - dual enthalpy

NOTE - *Refer to M4 Setup Guide provided with the unit for more info*

Operation

Refer to Unit Controller manual for start-up and operation.

A6 CONTROL - KG/KC/KH
APPLICATIONS ONLY

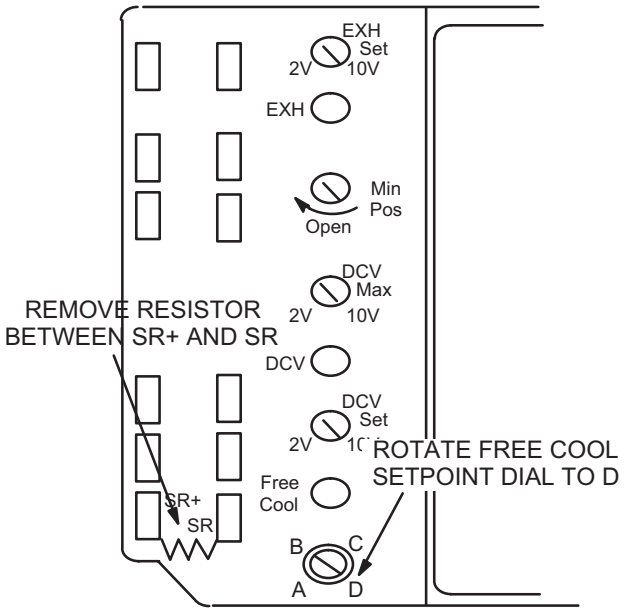

FIGURE 7

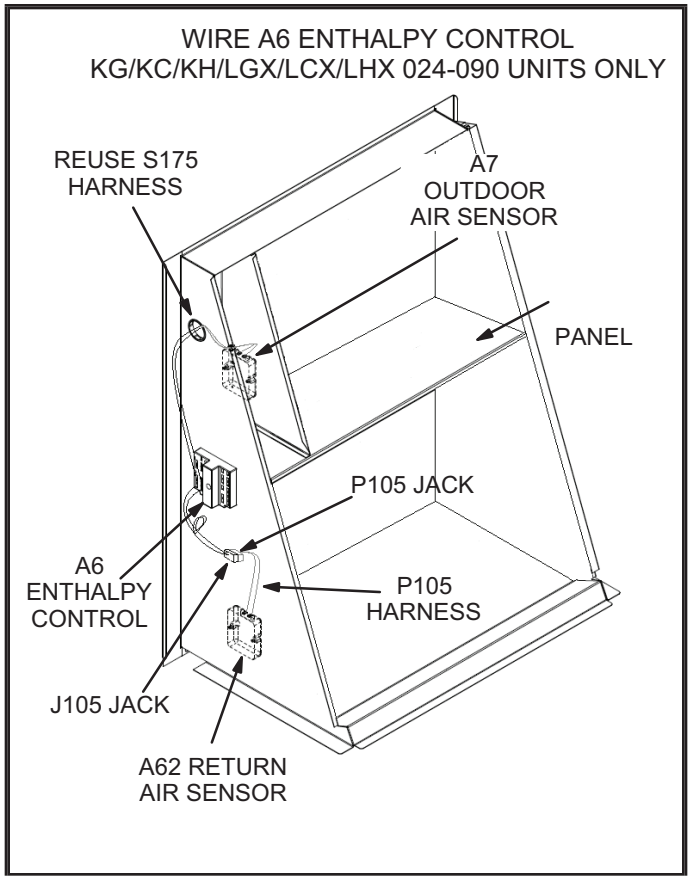

FIGURE 8

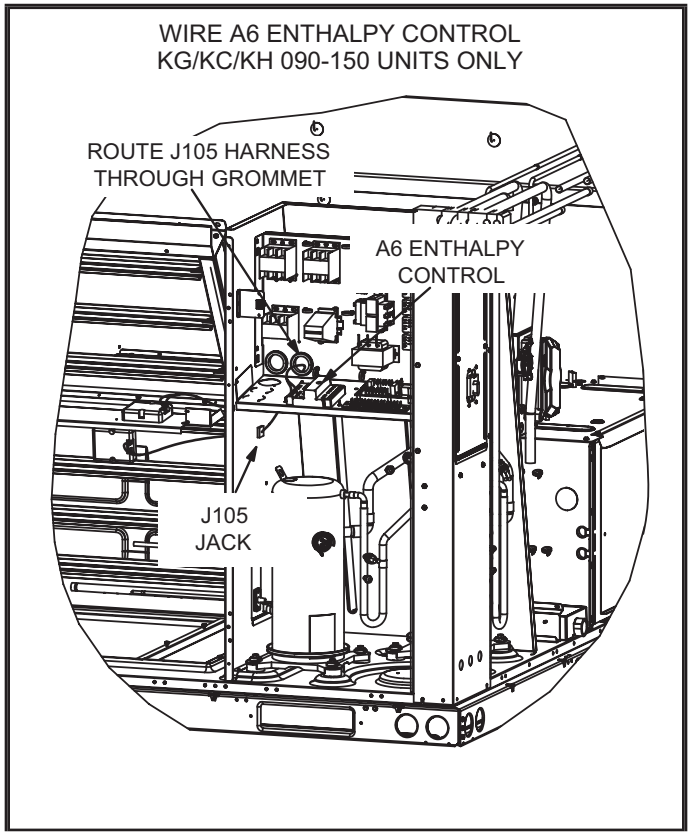

FIGURE 9

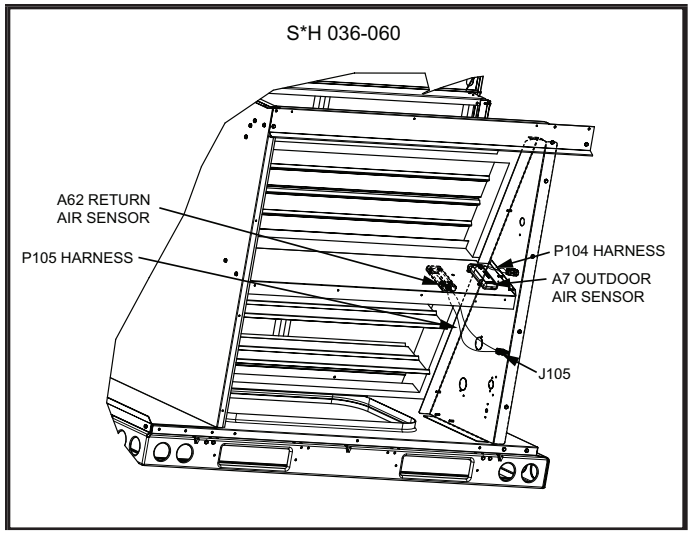

FIGURE 10

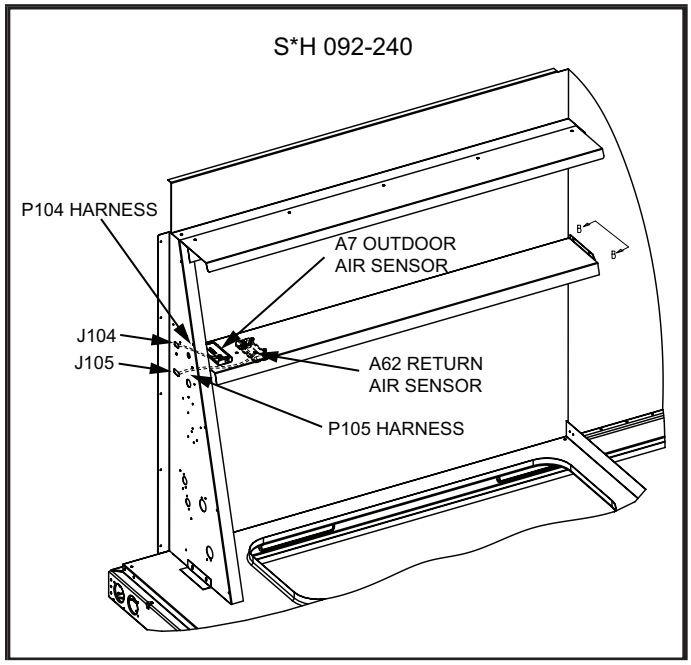

FIGURE 11