© 2025 Lennox Industries Inc.
Dallas, Texas USA

INSTALLATION INSTRUCTIONS SL280UHVK

DAVE LENNOX SIGNATURE®
GAS FURNACE UPFLOW / HORIZONTAL AIR DISCHARGE

508553-01
01/2025

THIS MANUAL MUST BE LEFT WITH THE HOME-OWNER FOR FUTURE REFERENCE

⚠ This is a safety alert symbol and should never be ignored. When you see this symbol on labels or in manuals, be alert to the potential for personal injury or death.

⚠ WARNING

This furnace is equipped with an ignition control factory enabled for use with Lennox A2L refrigerant systems. Disabling the refrigerant detection functionality on A2L system is prohibited by safety codes. Refer to furnace installation instructions for non-A2L and non-Lennox refrigerant system setup.

⚠ NOTICE

A thermostat is not included and must be ordered separately.

- A Lennox communicating thermostat must be used in communicating applications.
- In non-communicating applications, the Lennox ComfortSense® 7500 thermostat may be used, as well as other non-communicating thermostats.

In all cases, setup is critical to ensure proper system operation.

Field wiring for both communicating and non-communicating applications is illustrated in diagrams, which begin on Page 27.

⚠ IMPORTANT

DO NOT use the heat exchanger bracket to lift, drag or pull the furnace to its installation location. Doing so will loosen the bracket causing noise and or unsafe operation.

Contents

Unit Dimensions 2
Parts Arrangement 3
SL280UHVK Gas Furnace 4
Shipping and Packing List 4
Safety Information 4
Use of Furnace as a Construction Heater 5
General 5
Combustion, Dilution & Ventilation Air 6
Setting Equipment 9
Filters 12
Duct System 12
Venting 13
Gas Piping 21
Electrical 24
Ignition Control 30
Low GWP Application 43
Unit Start-Up 46
Gas Pressure Adjustment 45
Proper Combustion 47
High Altitude 47
Other Unit Adjustments 49
Heating Sequence of Operation 47
Service 51
Repair Parts List 53
Blower Data 54
Program Unit Capacity/Size Mode 57
Troubleshooting 58

0125
508553-01

Unit Dimensions - inches (mm)

[1] NOTE - 60C and 60D size units that require air volumes over 1800 cfm must have one of the following:
1. Single side return air and Optional Return Air Base with transition that must accommodate required 20 x 25 x 1 inch (508 x 635 x 25 mm) air filter to maintain proper velocity.
2. Bottom return air.
3. Return air from both sides.
4. Bottom and one side return air.

See Blower Performance Tables for additional information.

[2] Flue outlet may be horizontal but furnace must be vented vertically

[3] Optional External Side Return Air Filter Kit is not for use with the optional Return Air Base.

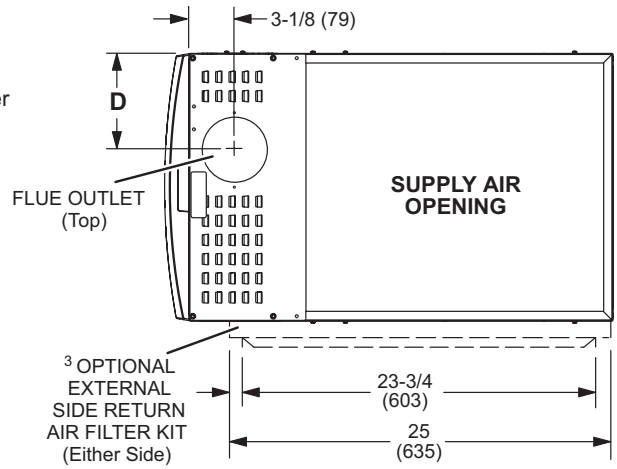

TOP VIEW

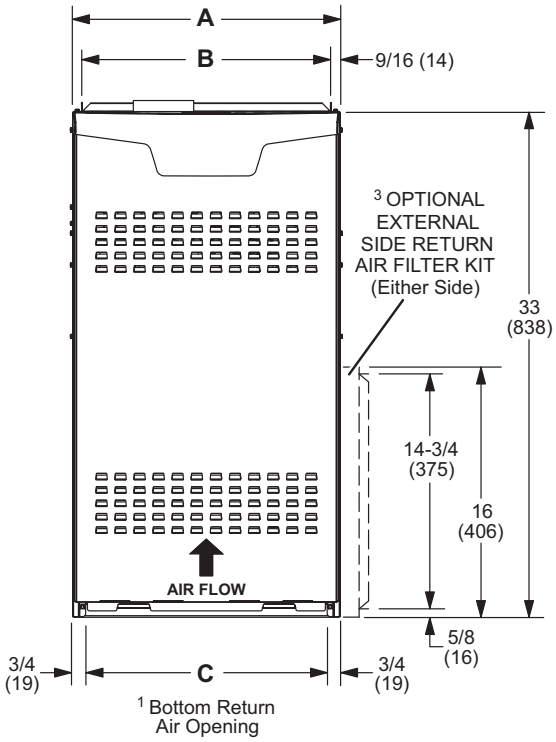

FRONT VIEW

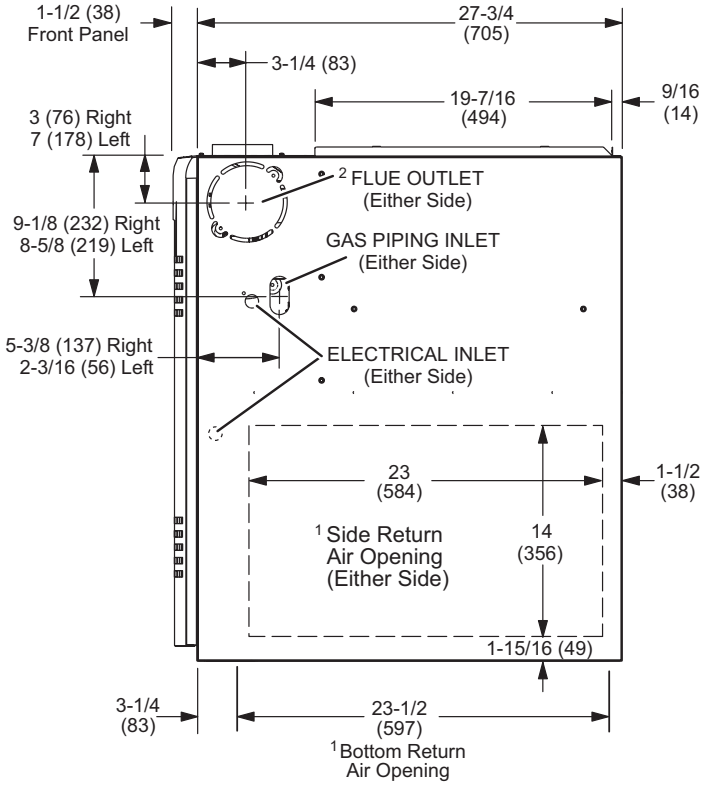

SIDE VIEW

Model No.	A		B		C		D	
	in.	mm	in	mm	in	mm	in	mm
SL280UH070V36AK	14	368	13-3/8	340	13	330	4-3/4	121
SL280UH090V36BK SL280UH090V48BK	17-1/2	446	16-3/8	416	16	406	6-1/4	159
SL280UH09060CK SL280UH110V60CK	21	533	19-7/8	504	19-1/2	495	8	203
SL280UH135V60DK	24-1/2	622	23-3/8	546	23	584	9-3/4	248

Parts Arrangement

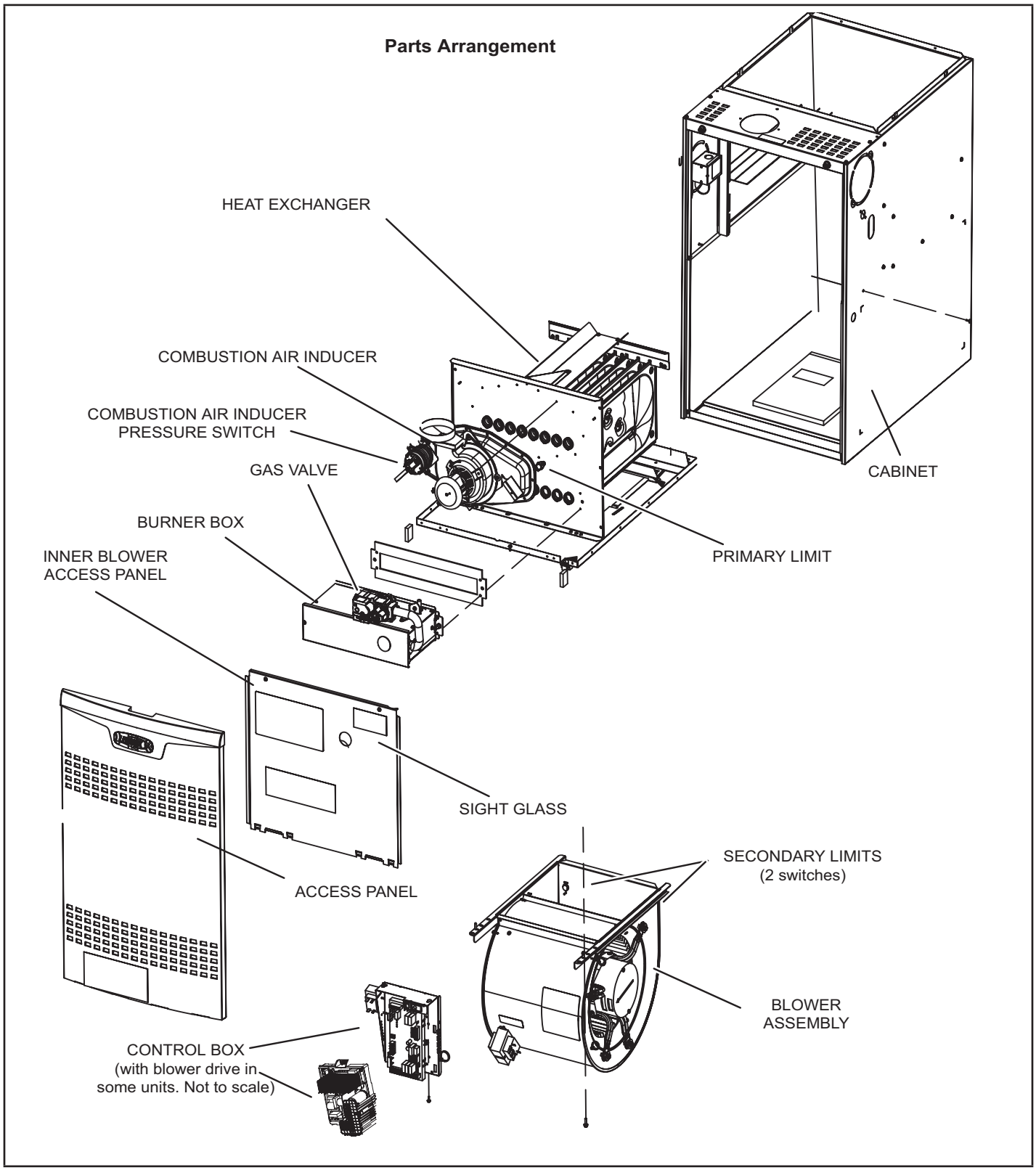

SL280UHVK Gas Furnace

The SL280UHVK unit is shipped ready for installation in the upflow or horizontal right position (for horizontal left position the combustion air pressure switch must be moved). The furnace is shipped with the bottom panel in place. The bottom panel must be removed if the unit is to be installed in a horizontal application. The panel may also be removed in upflow applications.

Shipping and Packing List

Package 1 of 1 contains

1 - Assembled SL280UHVK unit

1 - Bag assembly containing the following:

- 2 - Screws
- 1 - Snap bushing
- 1 - Snap plug
- 1 - Wire tie
- 1 -Vent warning label
- 1 - Owner's manual and warranty card

The following items may be ordered separately:

1 - Thermostat

1 - Suspension kit (for horizontal installations)

1 - Propane/LP changeover kit

1 - Return air base

1 - High altitude kit

1 - Side filter kit

1 - Sensor Kit (field installed)

Check equipment for shipping damage. If you find any damage, immediately contact the last carrier.

Safety Information

⚠ DANGER

Danger of explosion.

There are circumstances in which odorant used with LP/propane gas can lose its scent. In case of a leak, LP/propane gas will settle close to the floor and may be difficult to smell. An LP/propane leak detector should be installed in all LP applications.

⚠ WARNING

Improper installation, adjustment, alteration, service or maintenance can cause property damage, personal injury or loss of life. Installation and service must be performed by a licensed professional installer (or equivalent), service agency or the gas supplier.

⚠ CAUTION

As with any mechanical equipment, contact with sharp sheet metal edges can result in personal injury. Take care while handling this equipment and wear gloves and protective clothing.

Certifications

SL280UHVK units are CSA International certified to ANSI Z21.47.

In the USA, installation of gas furnaces must conform with local building codes. In the absence of local codes, units must be installed according to the current National Fuel Gas Code (ANSI-Z223.1). The National Fuel Gas Code is available from the following address:

American National Standards Institute, Inc.
11 West 42nd Street
New York, NY 10036

Clearances

Adequate clearance must be made around the air openings into the vestibule area. In order to ensure proper unit operation, combustion and ventilation air supply must be provided according to the current National Fuel Gas Code. Vent installations must be consistent with the venting tables (in this instruction) and applicable provisions of local building codes. This furnace is CSA International certified for installation clearances to combustible material as listed on the unit nameplate and in the tables in FIGURE 7 and FIGURE 11. Accessibility and service clearances must take precedence over fire protection clearances.

NOTE - *For installation on combustible floors, the furnace shall not be installed directly on carpeting, tile, or other combustible material other than wood flooring*.

Installed Locations

For installation in a residential garage, the furnace must be installed so that the burner(s) and the ignition source are located no less than 18 inches (457 mm) above the floor. The furnace must be located or protected to avoid physical damage by vehicles. When a furnace is installed in a public garage, hangar, or other building that has a hazardous atmosphere, the furnace must be installed according to recommended good practice requirements and current National Fuel Gas Code.

Temperature Rise

NOTE - *Furnace must be adjusted to obtain a temperature rise within the range specified on the unit nameplate. Failure to do*

so may cause erratic limit operation and may result in premature heat exchanger failure.

This SL280UHVK furnace must be installed so that its electrical components are protected from water.

Installed in Combination with a Cooling Coil

When this furnace is used with cooling units, it shall be installed in parallel with, or on the upstream side of, cooling units to avoid condensation in the heating compartment. See FIGURE 1. With a parallel flow arrangement, a damper (or other means to control the flow of air) must adequately prevent chilled air from entering the furnace. If the damper is manually operated, it must be equipped to prevent operation of either the heating or the cooling unit, unless it is in the full **HEAT** or **COOL** setting.

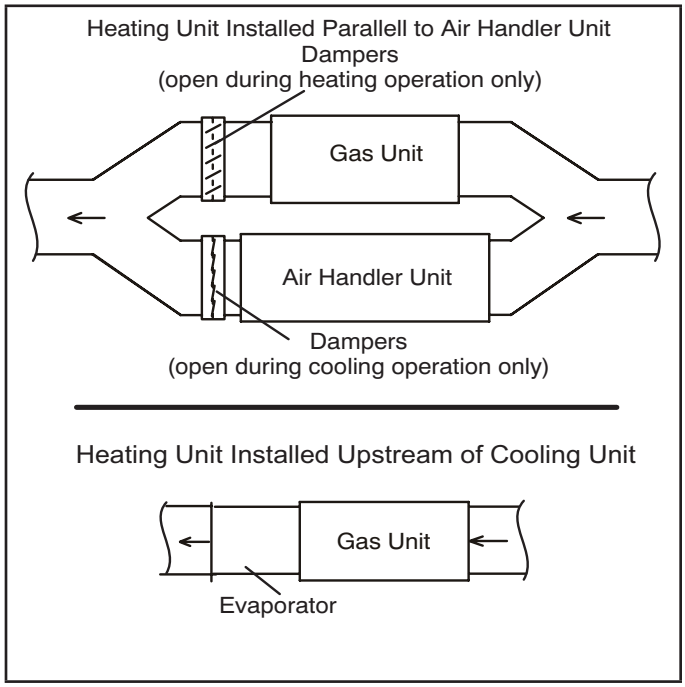

FIGURE 1

When installed, this furnace must be electrically grounded according to local codes. In addition, in the United States, installation must conform with the current National Electric Code, ANSI/NFPA No. 70. The National Electric Code (ANSI/NFPA No. 70) is available from the following address:

National Fire Protection Association
1 Battery March Park
Quincy, MA 02269

NOTE - *This furnace is designed for a minimum continuous return air temperature of 60°F (16°C) or an intermittent operation down to 55°F (13°C) dry bulb for cases where a night setback thermostat is used. Return air temperature must not exceed 85°F (29°C) dry bulb.*

The SL280UHVK furnace may be installed in alcoves, closets, attics, basements, garages, crawl spaces and utility rooms in the upflow or horizontal position.

This furnace design has not been CSA International certified for installation in mobile homes, recreational vehicles, or outdoors.

Use of Furnace as Construction Heater

Lennox does not recommend the use of SL280UHVK units as a construction heater during any phase of construction. Very low return air temperatures, harmful vapors and operation of the unit with clogged or misplaced filters will damage the unit.

SL280UHVK units may be used for heating of buildings or structures under construction, if the following conditions are met:

- *The vent system must be permanently installed per these installation instructions.*
- *A room thermostat must control the furnace. The use of fixed jumpers that will provide continuous heating is not allowed.*
- *The return air duct must be provided and sealed to the furnace.*
- *Return air temperature range between 60°F (16°C) and 80°F (27°C) must be maintained.*
- *Air filters must be installed in the system and must be maintained during construction.*
- *Air filters must be replaced upon construction completion.*
- *The input rate and temperature rise must be set per the furnace rating plate.*
- *One hundred percent (100%) outdoor air must be provided for combustion air requirements during construction. Temporary ducting may supply outdoor air to the furnace. Do not connect duct directly to the furnace. Size the temporary duct following these instructions in section for Combustion, Dilution and Ventilation Air in a confined space with air from outside.*
- *The furnace heat exchanger, components, duct system, air filters and evaporator coils must be thoroughly cleaned following final construction clean-up.*
- *The refrigerant leak detection sensor must be inspected for dust/debris deposits. Please refer to the evaporator coil and/or refrigerant detection sensor kit instructions for additional information.*
- *All furnace operating conditions (including ignition, input rate, temperature rise and venting) must be verified according to these installation instructions.*

General

These instructions are intended as a general guide and do not supersede local codes in any way. Consult authorities having jurisdiction before installation.

In addition to the requirements outlined previously, the following general recommendations must be considered when installing a SL280UHVK furnace:

- Place the furnace as close to the center of the air distribution system as possible. The furnace should also be located close to the chimney or vent termination point.

- Do not install the furnace where drafts might blow directly into it. This could cause improper combustion and unsafe operation.
- Do not block the furnace combustion air openings with clothing, boxes, doors, etc. Air is needed for proper combustion and safe unit operation.
- When the furnace is installed in an attic or other insulated space, keep insulation away from the furnace.
- Please consult the manufacturer of your evaporator coil for their recommendations on distance required between the heat exchanger and their drain pan. Adequate space must be provided between the drain pan and the furnace heat exchanger

NOTE - The Commonwealth of Massachusetts stipulates these additional requirements:

- ***Gas furnaces shall be installed by a licensed plumber or fitter only.***
- ***The gas cock must be "T handle" type.***
- ***When a furnace is installed in an attic, the passageway to and service area surrounding the equipment shall be floored.***

Combustion, Dilution & Ventilation Air

In the past, there was no problem in bringing in sufficient outdoor air for combustion. Infiltration provided all the air that was needed. In today's homes, tight construction practices make it necessary to bring in air from outside for combustion. Take into account that exhaust fans, appliance vents, chimneys, and fireplaces force additional air that could be used for combustion out of the house. Unless outside air is brought into the house for combustion, negative pressure (outside pressure is greater than inside pressure) will build to the point that a downdraft can occur in the furnace vent pipe or chimney. As a result, combustion gases enter the living space creating a potentially dangerous situation.

In the absence of local codes concerning air for combustion and ventilation, use the guidelines and procedures in this section to install SL280UHVK furnaces to ensure efficient and safe operation. You must consider combustion air needs and requirements for exhaust vents and gas piping. A portion of this information has been reprinted with permission from the National Fuel Gas Code (ANSI-Z223.1). This reprinted material is not the complete and official position of the ANSI on the referenced subject, which is represented only by the standard in its entirety

⚠ CAUTION

Do not install the furnace in a corrosive or contaminated atmosphere. Meet all combustion and ventilation air requirements, as well as all local codes.

⚠ CAUTION

Insufficient combustion air can cause headaches, nausea, dizziness or asphyxiation. It will also cause excess water in the heat exchanger resulting in rusting and premature heat exchanger failure. Excessive exposure to contaminated combustion air will result in safety and performance related problems. Avoid exposure to the following substances in the combustion air supply:

Permanent wave solutions
Chlorinated waxes and cleaners
Chlorine base swimming pool chemicals
Water softening chemicals
De-icing salts or chemicals
Carbon tetrachloride
Halogen type refrigerants
Cleaning solvents (such as perchloroethylene)
Printing inks, paint removers, varnishes, etc.
Hydrochloric acid
Cements and glues
Antistatic fabric softeners for clothes dryers
Masonry acid washing materials

All gas-fired appliances require air for the combustion process. If sufficient combustion air is not available, the furnace or other appliances will operate inefficiently and unsafely. Enough air must be provided to meet the needs of all fuel-burning appliances and appliances such as exhaust fans which force air out of the house. When fireplaces, exhaust fans, or clothes dryers are used at the same time as the furnace, much more air is necessary to ensure proper combustion and to prevent a downdraft. Insufficient air causes incomplete combustion which can result in carbon monoxide.

In addition to providing combustion air, fresh outdoor air dilutes contaminants in the indoor air. These contaminants may include bleaches, adhesives, detergents, solvents and other contaminants which can corrode furnace components.

The requirements for providing air for combustion and ventilation depend largely on whether the furnace is installed in an unconfined or a confined space.

Unconfined Space

An unconfined space is an area such as a basement or large equipment room with a volume greater than 50 cubic feet (1.42 m3) per 1,000 Btu (.29 kW) per hour of the combined input rating of all appliances installed in that space. This space also includes adjacent rooms which are not separated by a door.

Though an area may appear to be confined, it might be necessary to bring in outdoor air for combustion if the structure does not provide enough air by infiltration. If the furnace is located in a building of tight construction with weather stripping and caulking around the windows and doors, follow the procedures in the air from outside section.

Confined Space

A confined space is an area with a volume less than 50 cubic feet (1.42 m3) per 1,000 Btu (.29 kW) per hour of the combined input rating of all appliances installed in that space. This definition includes furnace closets or small equipment rooms.

When the furnace is installed so that supply ducts carry air circulated by the furnace to areas outside the space containing the furnace, the return air must be handled by ducts which are sealed to the furnace casing and which terminate outside the space containing the furnace. This is especially important when the furnace is mounted on a platform in a confined space such as a closet or small equipment room.

Even a small leak around the base of the unit at the platform or at the return air duct connection can cause a potentially dangerous negative pressure condition. Air for combustion and ventilation can be brought into the confined

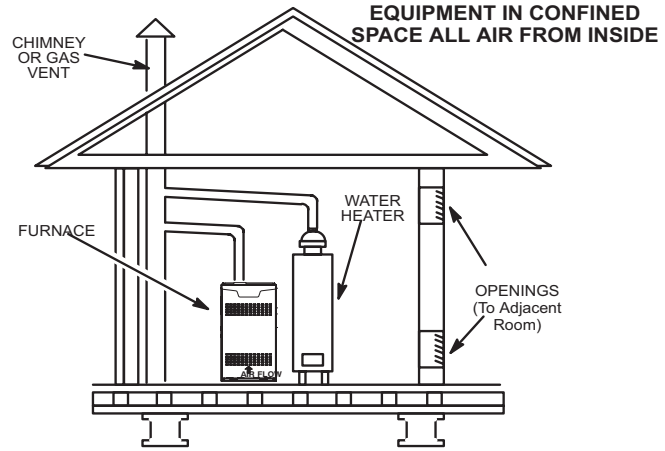

NOTE - Each opening shall have a free area of at least one square inch (645 mm^2) per 1,000 Btu (.29 kW) per hour of the total input rating of all equipment in the enclosure, but not less than 100 square inches (64516 mm^2).

FIGURE 2

Air from Inside

If the confined space that houses the furnace adjoins a space categorized as unconfined, air can be brought in by providing two permanent openings between the two spaces. Each opening must have a minimum free area of 1 square inch (645 mm2) per 1,000 Btu (.29 kW) per hour of total input rating of all gas-fired equipment in the confined space. Each opening must be at least 100 square inches (64516 mm2). One opening shall be within 12 inches (305 mm) of the top of the enclosure and one opening within 12 inches (305 mm) of the bottom. See FIGURE 2.

Air from Outside

If air from outside is brought in for combustion and ventilation, the confined space must have two permanent openings. One opening shall be within 12 inches (305 mm) of the top of the enclosure and one opening within 12 inches (305 mm) of the bottom. These openings must communicate directly or by ducts with the outdoors or spaces (crawl or attic) that freely communicate with the outdoors or indirectly through vertical ducts. Each opening shall have a minimum free area of 1 square inch (645 mm2) per 4,000 Btu (1.17 kW) per hour of total input rating of all equipment in the enclosure. See FIGURE 3 and FIGURE 4. When communicating with the outdoors through horizontal ducts, each opening shall have a minimum free area of 1 square inch (645 mm2) per 2,000 Btu (.56 kW) per total input rating of all equipment in the enclosure. See FIGURE 5.

When ducts are used, they shall be of the same cross-sectional area as the free area of the openings to which they connect. The minimum dimension of rectangular air ducts shall be no less than 3 inches (75 mm). In calculating free area, the blocking effect of louvers, grilles, or screens must be considered. If the design and free area of protective covering is not known for calculating the size opening required, it may be assumed that wood louvers will have 20 to 25 percent free area and metal louvers and grilles will have 60 to 75 percent free area. Louvers and grilles must be fixed in the open position or interlocked with the equipment so that they are opened automatically during equipment operation.

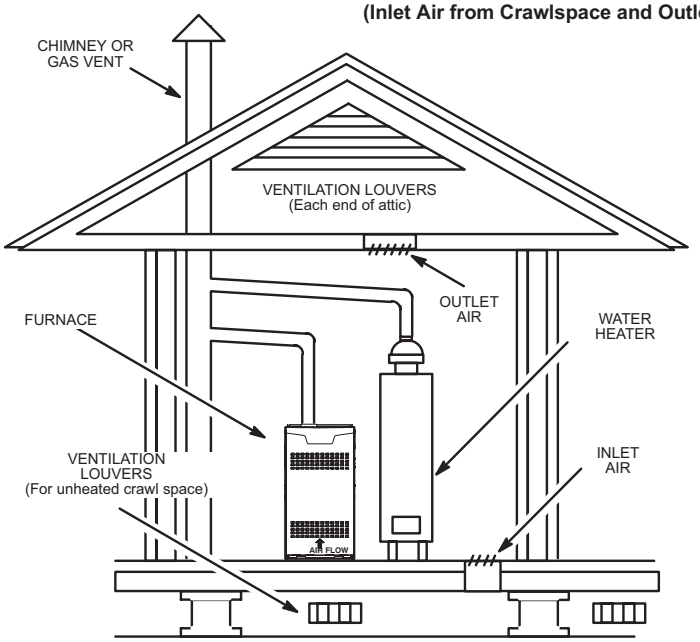

NOTE-The inlet and outlet air openings shall each have a free area of at least one square inch (645 mm^2) *per 4,000 Btu (1.17 kW) per hour of the total input rating of all equipment in the enclosure.*

FIGURE 3

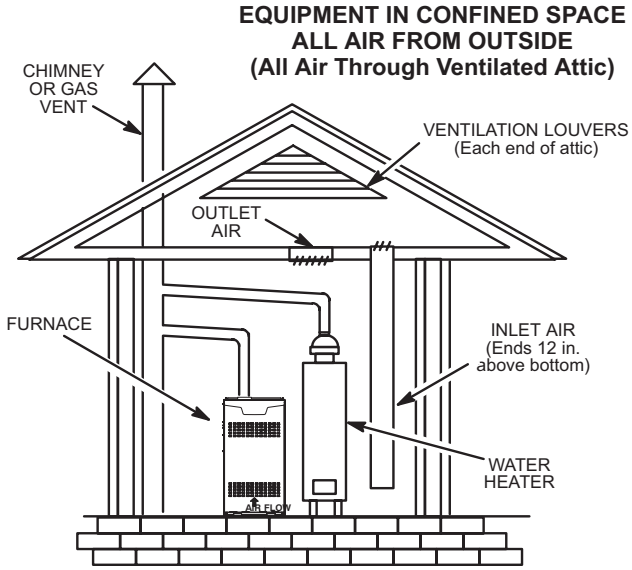

NOTE-The inlet and outlet air openings shall each have a free area of at least one square inch (645 mm^2) per 4,000 Btu (1.17 kW) per hour of the total input rating of all equipment in the enclosure.

FIGURE 4

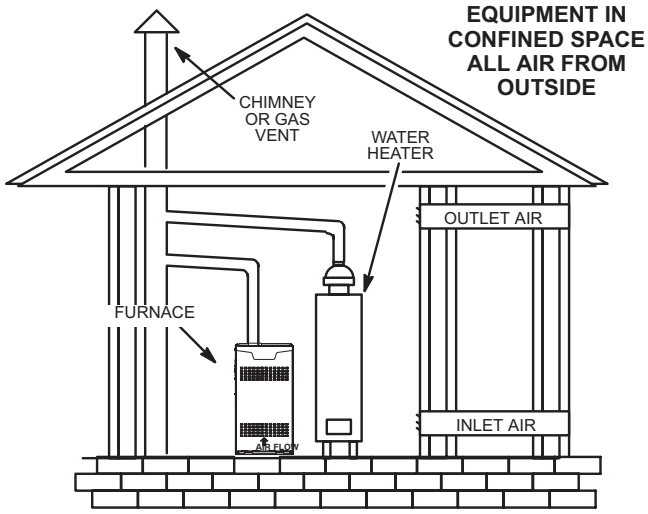

NOTE - Each air duct opening shall have a free area of at least one square inch (645 mm^2) per 2,000 Btu (.59 kW) per hour of the total input rating of all equipment in the enclosure. If the equipment room is located against an outside wall and the air openings communicate directly with the outdoors, each opening shall have a free area of at least one square inch (645 mm^2) per 4,000 Btu (1.17 kW) per hour of the total input rating of all other equipment in the enclosure.

FIGURE 5

Setting Equipmet

⚠ WARNING

Do not install the furnace on its front or its back. Do not connect the return air ducts to the back of the furnace. Doing so will adversely affect the operation of the safety control devices, which could result in personal injury or death.

.The SL280UHVK gas furnace can be installed as shipped in either the upflow position or the horizontal position.

Select a location that allows for the required clearances that are listed on the unit nameplate. Also consider gas supply connections, electrical supply, vent connection, and installation and service clearances [24 inches (610 mm) at unit front]. *The unit must be level*.

NOTE - *Units with 1/2 hp blower motors are equipped with three flexible legs and one rigid leg. See FIGURE 6. The rigid leg is equipped with a shipping bolt and a flat white plastic washer (rather than the rubber mounting grommet used with a flexible mounting leg).* ***The bolt and washer must be removed before the furnace is placed into operation.*** *After the bolt and washer have been removed, the rigid leg will not touch the blower housing.*

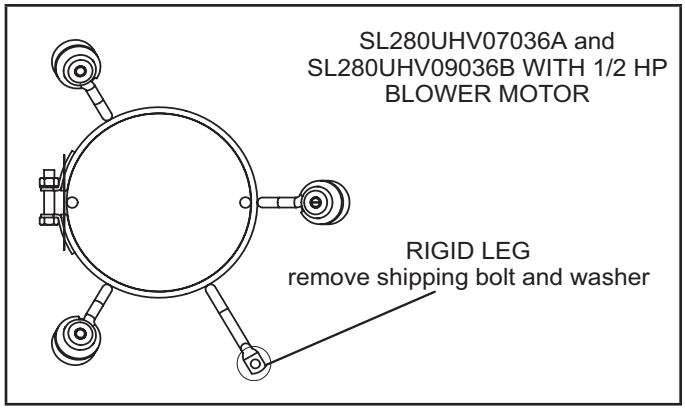

FIGURE 6

Upflow Applications

Allow for clearances to combustible materials as indicated on the unit nameplate. Minimum clearances for closet or alcove installations are shown in FIGURE 7.

Upflow Application Installation Clearances

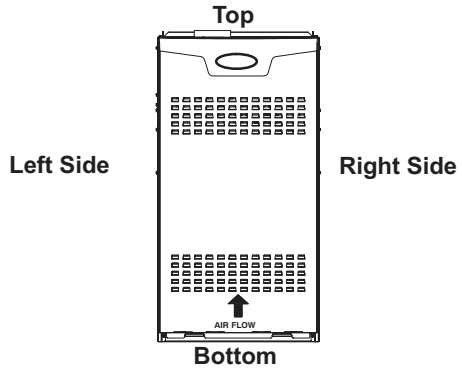

Type of Vent Connector	Type C	Type B1
Top	1 in. (25 mm)	1 in. (25 mm)
*Front	2-1/4 in. (57 mm)**	2-1/4 in. (57 mm)
Back	0	0
Sides	0†	0
Vent	6 in. (152 mm)	1 in. (25 mm)
Floor	0‡	0‡

***Front clearance in alcove installation must be 24 in. (610 mm). Maintain a minimum of 24 in. (610 mm) for front service access.**
**** 3-1/4 in. if single wall vent pipe is used.**
‡For installation on a combustible floor, do not install the furnace directly on carpeting, tile or other combustible materials other than wood flooring.
†Left side requires 3 inches if a single wall vent is used on 14-1/2 inch cabinets, or 2 in. if a single wall vent is used on 17-1/2 in. cabinets.

FIGURE 7

Return Air -- Upflow Applications

Return air can be brought in through the bottom or either side of the furnace installed in an upflow application. If the furnace is installed on a platform with bottom return, make an airtight seal between the bottom of the furnace and the platform to ensure that the furnace operates properly and safely. The furnace is equipped with a removable bottom panel to facilitate installation.

Markings are provided on both sides of the furnace cabinet for installations that require side return air. Cut the furnace cabinet at the maximum dimensions shown on page 2.

NOTE - *60C units that require air volumes over 1800 cfm (850 L/s) must have one of the following:*

1 - Single side return air with transition to accommodate 20 x 25 x 1 in. (508 x 635 x 25 mm) cleanable air filter. (Required to maintain proper air velocity.) See FIGURE 8.

2 - Single side return air with optional return airbase. See FIGURE 9.

3 - Bottom return air.

4 - Return air from both sides.

5 - Bottom and one side return air.

Refer to Engineering Handbook for additional information..

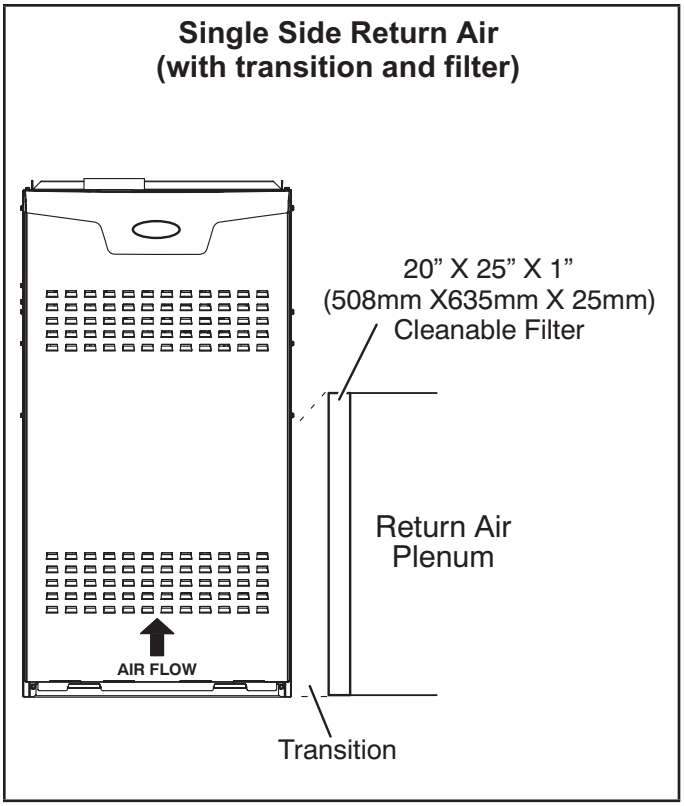

FIGURE 8

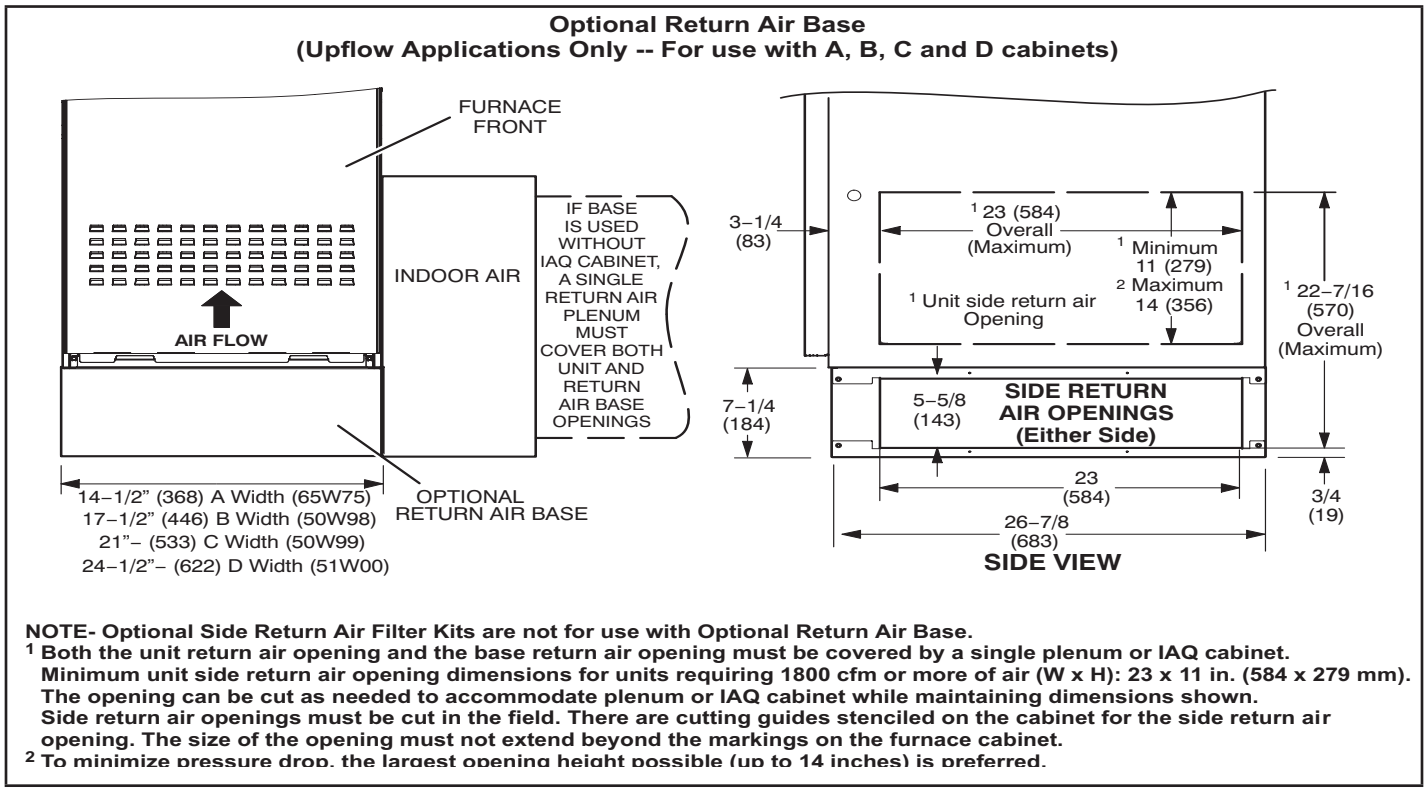

NOTE- Optional Side Return Air Filter Kits are not for use with Optional Return Air Base.

1 Both the unit return air opening and the base return air opening must be covered by a single plenum or IAQ cabinet. Minimum unit side return air opening dimensions for units requiring 1800 cfm or more of air (W x H): 23 x 11 in. (584 x 279 mm). The opening can be cut as needed to accommodate plenum or IAQ cabinet while maintaining dimensions shown. Side return air openings must be cut in the field. There are cutting guides stenciled on the cabinet for the side return air opening. The size of the opening must not extend beyond the markings on the furnace cabinet.

2 To minimize pressure drop, the largest opening height possible (up to 14 inches) is preferred.

FIGURE 9

Removing the Bottom Panel

Remove the two screws that secure the bottom cap to the furnace. Pivot the bottom cap down to release the bottom panel. Once the bottom panel has been removed, reinstall the bottom cap. See FIGURE 10.

Removing the Bottom Panel

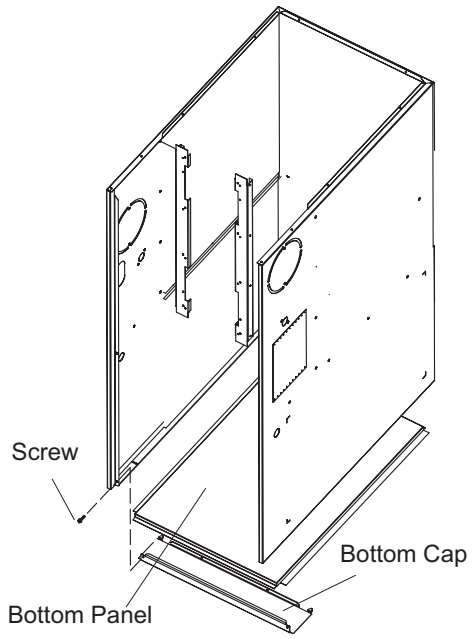

FIGURE 10

Horizontal Application Installation Clearances

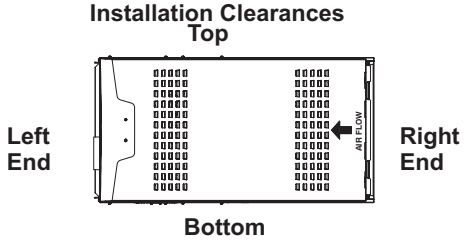

Vent Connector Type	Type C	Type B1
Top	0	0
*Front	2-1/4 in. (57 mm)**	2-14 in. (57 mm)
Back	0	0
Ends	2 in. (51 mm)	2 in. (51 mm)
Vent	6 in. (152 mm)	1 in. (25 mm)
Floor	0‡	0‡

*Front clearance in alcove installation must be 24 in. (610 mm). Maintain a minimum of 24 in. (610 mm) for front service access.
** 3-1/4 in. if single wall vent pipe is used.
‡For installations on a combustible floor, do not install the furnace directly on carpeting, tile or other combustible materials other than wood flooring.

FIGURE 11

Horizontal Applications

The SL280UHVK furnace can be installed in horizontal applications. Order horizontal suspension kit (51W10) from Lennox, or use equivalent suspension method.

Allow for clearances to combustible materials as indicated on the unit nameplate. Minimum clearances for closet or alcove installations are shown in FIGURE 11.

This furnace may be installed in either an attic or a crawlspace. Either suspend the furnace from roof rafters or floor joists, as shown in FIGURE 12, or install the furnace on a platform, as shown in FIGURE 13.

Typical Horizontal Application Unit Suspended in Attic or Crawlspace

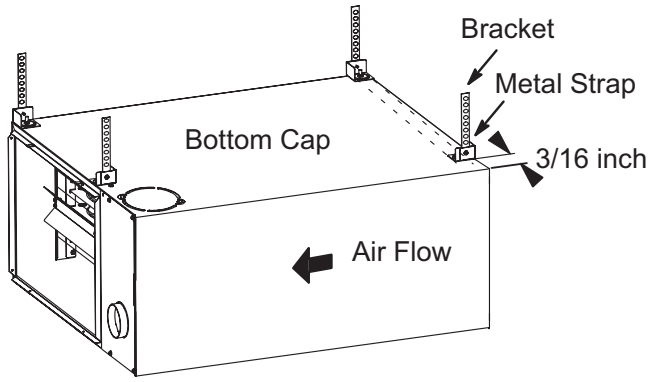

FIGURE 12

NOTE - *Heavy-gauge perforated sheet metal straps may be used to suspend the unit from roof rafters or ceiling joists. When straps are used to suspend the unit in this way, support must be provided for both the ends. The straps must not interfere with the plenum or exhaust piping installation. Cooling coils and supply and return air plenums must be supported separately.*

NOTE - *When the furnace is installed on a platform in a crawlspace, it must be elevated enough to avoid water damage and to allow the evaporator coil to drain.*

Return Air -- Horizontal Applications

Return air must be brought in through the end of a furnace installed in a horizontal application. The furnace is equipped with a removable bottom panel to facilitate installation. See FIGURE 10.

⚠ CAUTION

If this unit is being installed in a space serviced by an exhaust fan, power exhaust fan, or other device which may create a negative pressure in the space, take care when sizing the inlet air opening. The inlet air opening must be sized to accommodate the maximum volume of exhausted air as well as the maximum volume of combustion air required for all gas appliances serviced by this space.

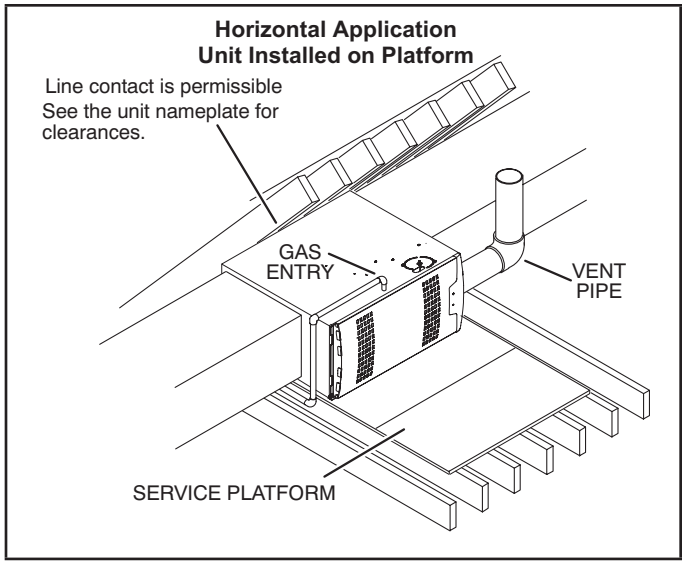

FIGURE 13

⚠ WARNING

Improper installation of the furnace can result in personal injury or death. Combustion and flue products must never be allowed to enter the return air system or the living space. Use screws and joint tape to seal the return air system to the furnace.

In platform installations with bottom return air, the furnace should be sealed airtight to the return air plenum. A door must never be used as a portion of the return air duct system. The base must provide a stable support and an airtight seal to the furnace. Allow absolutely no sagging, cracks, gaps, etc. The return and supply air duct systems must never be connected to or from other heating devices such as a fireplace or stove, etc. Fire, explosion, carbon monoxide poisoning, personal injury and/or property damage could result.

⚠ WARNING

The blower access panel must be securely in place when the blower and burners are operating. Gas fumes, which could contain carbon monoxide, can be drawn into living space resulting in personal injury or death.

Filters

This unit is not equipped with a filter or rack. A field-provided high-velocity filter is required for the unit to operate properly. TABLE 1 lists recommended filter sizes.

⚠ IMPORTANT

If a highefficiency filter is being installed as part of this system to ensure better indoor air quality, the filter must be properly sized. Highefficiency filters have a higher static pressure drop than standardefficiency glass/foam filters. If the pressure drop is too great, system capacity and performance may be reduced. The pressure drop may also cause the limit to trip more frequently during the winter and the indoor coil to freeze in the summer, resulting in an increase in the number of service calls.

Before using any filter with this system, check the specifications provided by the filter manufacturer against the data given in the appropriate Lennox Product Specifications bulletin. Additional information is provided in Service and Application Note ACC002 (August 2000).

TABLE 1

Furnace Cabinet Width	Filter Size	
	Side Return	Bottom Return
14-1/2”	16 X 25 X 1 (1)	14 X 25 X 1 (1)
17-1/2”	16 X 25 X 1 (1)	16 X 25 X 1 (1)
21”	16 X 25 X 1 (1)	20 X 25 X 1 (1)
24-1/2”	16 X 25 X 1 (2)	24 X 25 X 1 (1)

Duct System

Use industry-approved standards (such as those published by Air Conditioning Contractors of America or American Society of Heating, Refrigerating and Air Conditioning Engineers) to size and install the supply and return air duct system. See FIGURE 14. This will result in a quiet and low-static system that has uniform air distribution.

NOTE - *Do not operate the furnace in the heating mode with an external static pressure that exceeds 0.8 inche w.c. Higher external static pressures may cause erratic limit operation.*

Supply Air Plenum

If the furnace is installed without a cooling coil, a removable access panel must be installed in the supply air duct. The access panel should be large enough to permit inspection (either by smoke or reflected light) of the heat exchanger for leaks after the furnace is installed. The furnace access panel must always be in place when the furnace is operating and it must not allow leaks. In horizontal units, install self tapping screws in the three evaporator coil screw holes made for upflow applications to seal the top cap to the vestibule panel.

Return Air Plenum

NOTE - Return air must not be drawn from a room where this furnace, or any other gas-fueled appliance (i.e., water heater), or carbon monoxide- producing device (i.e., wood fireplace) is installed.

When return air is drawn from a room, a negative pressure is created in the room. If a gas appliance is operating in a room with negative pressure, the flue products can be pulled back down the vent pipe and into the room

Thisreverse flow of the flue gas may result in incomplete combustion and the formation of carbon monoxide gas. This toxic gas might then be distributed throughout the house by the furnace duct system.

In upflow applications, the return air can be brought in through the bottom or either side of the furnace. If a furnace with bottom return air is installed on a platform, make an airtight seal between the bottom of the furnace and the platform to ensure that the unit operates properly and safely. Use fiberglass sealing strips, caulking, or equivalent sealing method between the plenum and the furnace cabinet to ensure a tight seal. If a filter is installed, size the return air duct to fit the filter frame

.

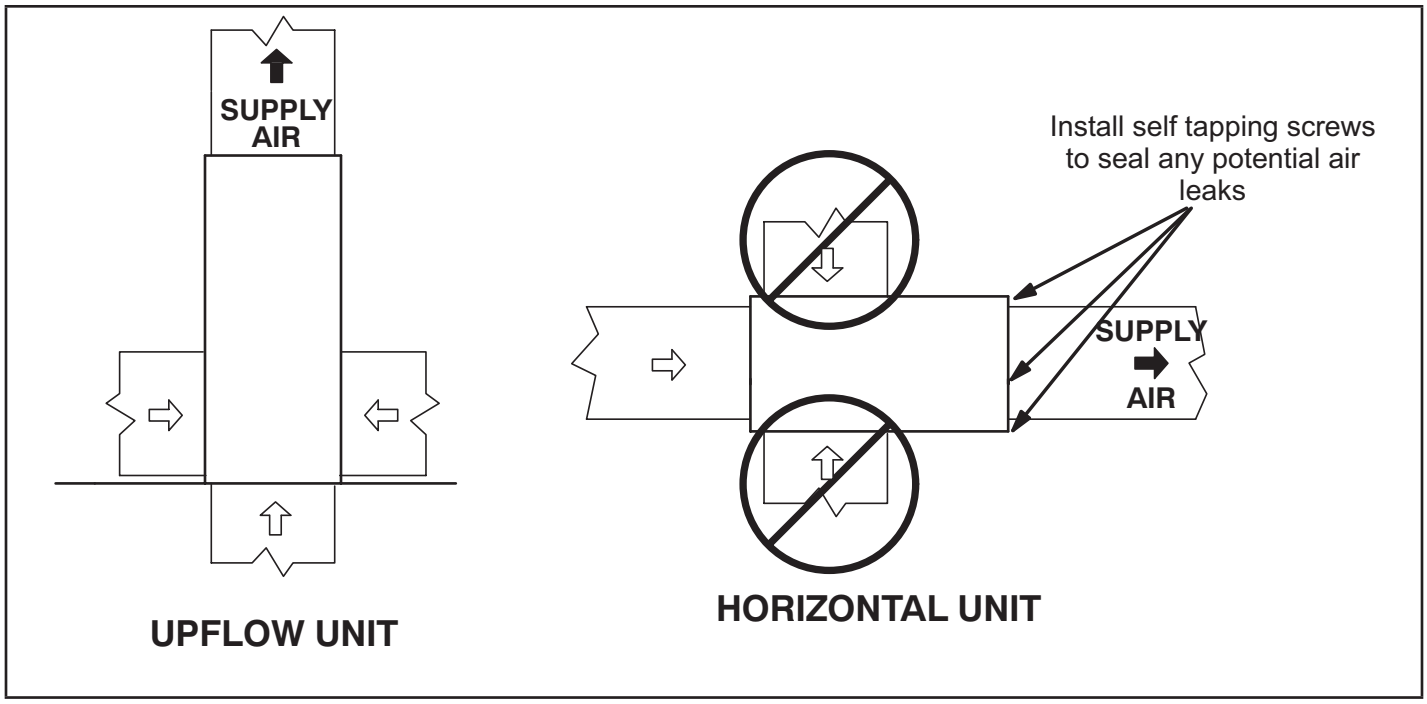

FIGURE 14

Venting

A 4-inch diameter flue transition is factory-installed on the combustion air inducer outlet of all models. FIGURE 15 shows the combustion air inducer as shipped from the factory.

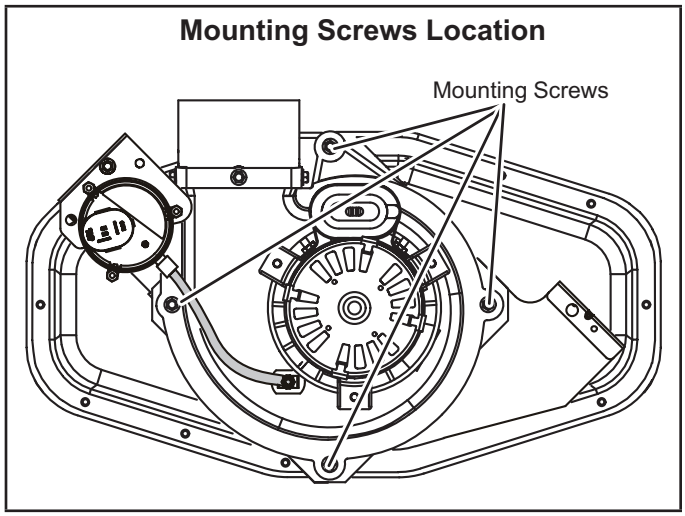

FIGURE 15

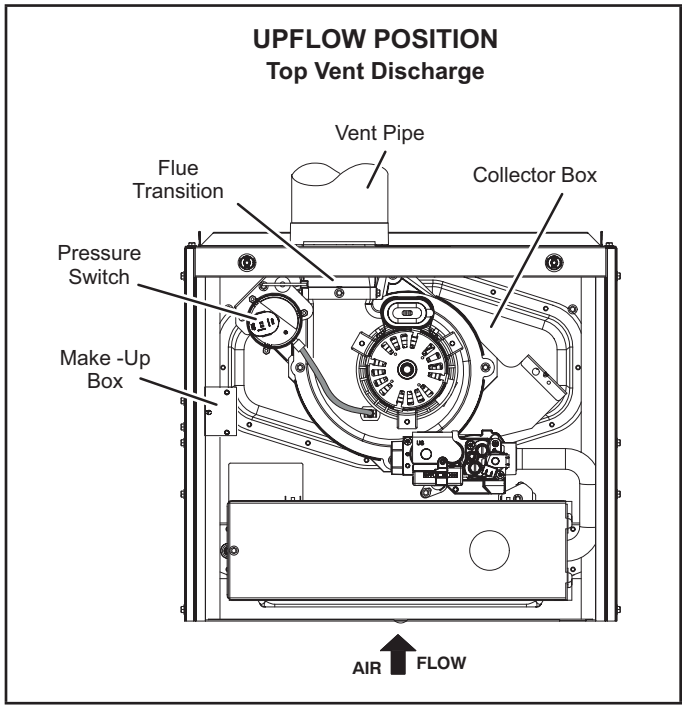

FIGURE 16

⚠ IMPORTANT

The unit will not vent properly with the flue transition pointed down in the 6 o'clock position. The combustion air inducer may be rotated clockwise or counterclockwise by 90° to allow for top or side vent discharge in all applications. When the unit is installed, the flue transition must be in the 9 o'clock, 12 o'clock or 3 o'clock position.

If necessary reposition the combustion air inducer, pressure switch and or make up box as needed per the following steps and see FIGURE 17 through FIGURE 22.

1 - Remove the four mounting screws which secure the combustion air inducer / pressure switch assembly to the orifice plate. See FIGURE 15. Lift and rotate the assembly 90 degrees clockwise or counter clockwise to either the 3 o'clock position or to 9 o'clock position and re-secure with four screws. Gasket should be left in place.

2 - Use tin snips to cut preferred opening on the cabinet for repositioning the flue outlet. Use the cut out piece as a cover plate to patch unused opening on cabine

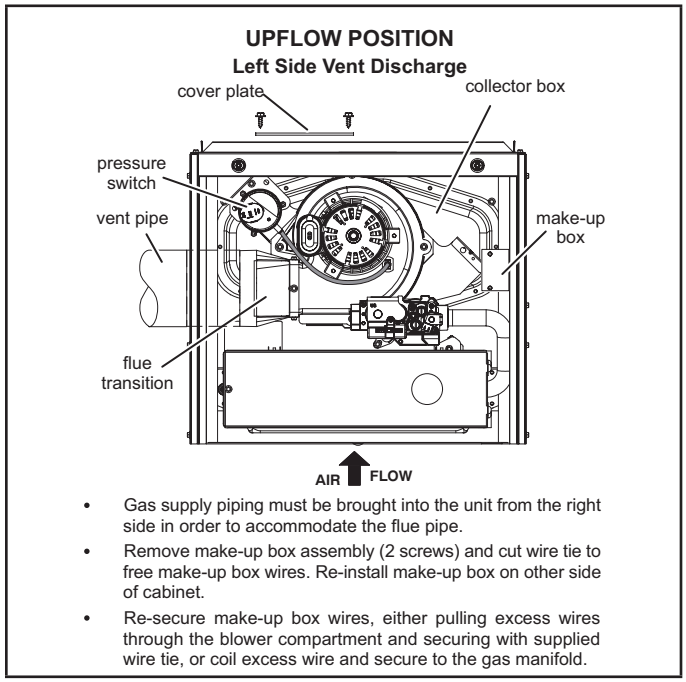

FIGURE 17

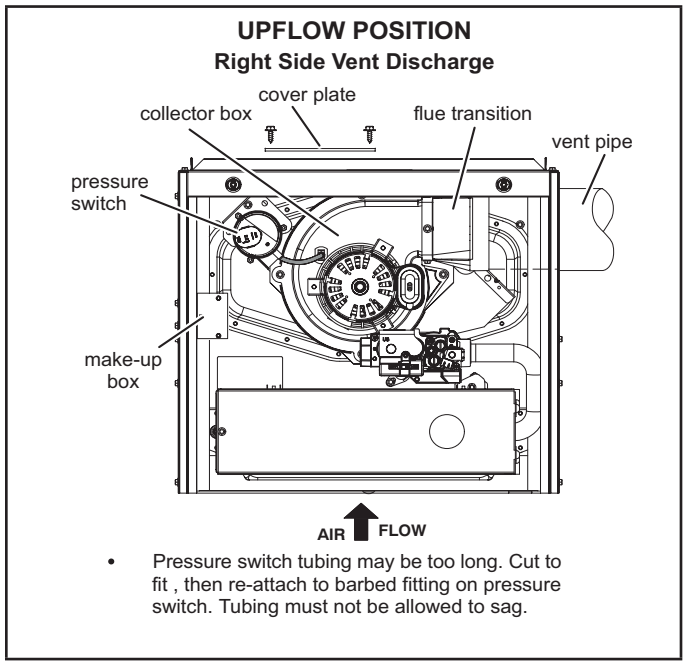

FIGURE 18

HORIZONTAL LEFT POSITION
Top Vent Discharge

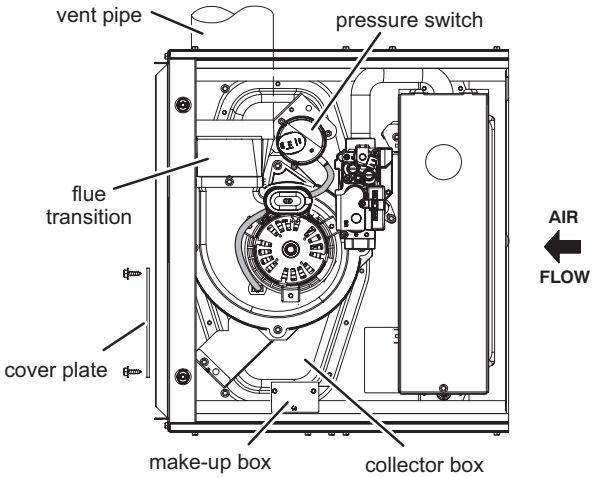

- Disconnect pressure switch hose from barbed fitting on the pressure switch assembly. Remove pressure switch assembly (1 screw) and cut wire tie to free pressure switch wires. Re-install pressure switch on the other side of orifice plate and re-connect pressure switch hose.
- Re-secure pressure switch wires by either pulling excess wires through the blower compartment and securing with supplied wire tie or coil excess wire and secure to the gas manifold.

FIGURE 19

HORIZONTAL LEFT POSITION
Side Vent Discharge

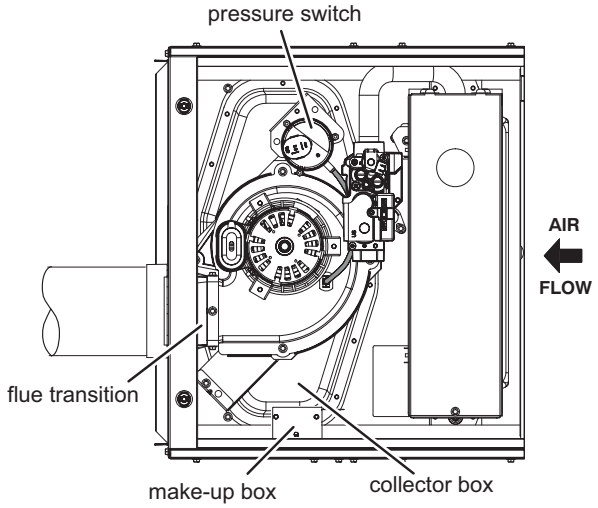

- Disconnect pressure switch hose from barbed fitting on the pressure switch assembly. Remove pressure switch assembly (1 screw) and cut wire tie to free pressure switch wires. Re-install pressure switch on the other side of orifice plate and re-connect pressure switch hose.
- Re-secure pressure switch wires by either pulling excess wires through the blower compartment and securing with supplied wire tie, or coil excess wire and secure to the gas manifold.

FIGURE 20

HORIZONTAL RIGHT POSITION
Top Vent Discharge

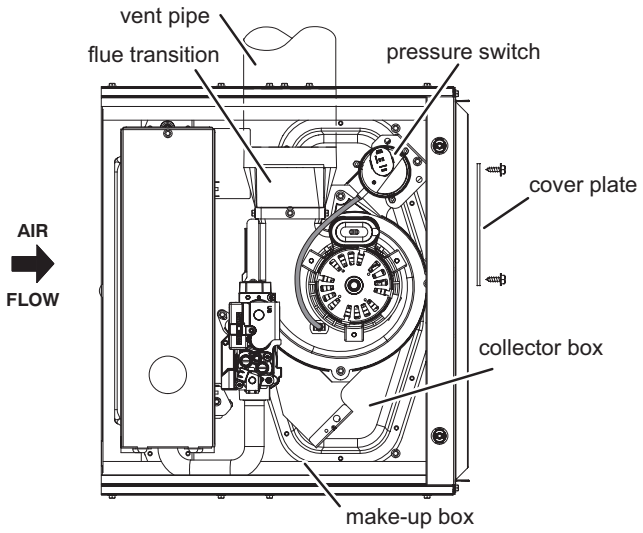

- Gas supply piping must be brought into the unit from the bottom in order to accommodate the flue pipe.
- Remove make-up box assembly (2 screws) and cut wire tie to free make-up box wires. Re-install make-up box on other side of cabinet.
- Re-secure make-up box wires by either pulling excess wires through the blower compartment and securing with supplied wire tie, or coil excess wire and secure to the gas manifold.

FIGURE 21

HORIZONTAL RIGHT POSITION
Side Vent Discharge

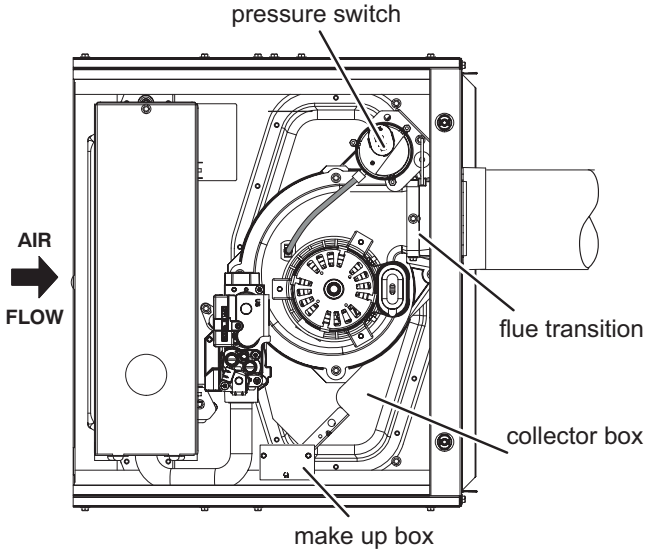

FIGURE 22

The SL280UHVK series units are classified as fan-assisted Category I furnaces when vertically vented according to the latest edition of National Fuel Gas Code (NFPA 54 / ANSI Z223.1) in the USA. A fan-assisted Category I furnace is an appliance equipped with an integral mechanical means to either draw or force combustion products through the combustion chamber and/or heat exchanger. The EL280UHEK is not approved for use with horizontal venting.

NOTE - *Use these instructions as a guide. They do not supersede local codes. This furnace must be vented according to all local codes these installation instructions, and the provided venting tables in these instructions*

The venting tables in this manual were extracted from the National Fuel Gas Code (NFPA 54 / ANSI Z223.1) and are provided as a guide for proper vent installation. Proper application, termination, construction and location of vents must conform to local codes having jurisdiction. In the absence of local codes, the NFGC serves as the defining document.

Refer to the tables and the venting information contained in these instructions to properly size and install the venting system.

Use self-drilling sheet metal screws or a mechanical fastener to firmly secure the vent pipe to the round collar of the flue transition. If self-drilling screws are used to attach the vent pipe, it is recommended that three be used. Drive one self-drilling screw through the front and one through each side of the vent pipe and collar. See FIGURE 23.

Install the first vent connector elbow at a minimum of six inches (152 mm) from the furnace vent outlet.

Venting Using a Masonry Chimney

The following additional requirements apply when a lined masonry chimney is used to vent this furnace.

Masonry chimneys used to vent Category I central furnaces must be either tile-lined or lined with a listed metal lining system or dedicated gas vent. Unlined masonry chimneys are prohibited. See FIGURE 24 and FIGURE 25 for common venting.

A chimney with one or more sides exposed to the outside of the structure is considered to be an exterior chimney. An exterior masonry chimney that is not tile-lined must be lined with B1 vent or a listed insulated flexible metal vent. An exterior tile-lined chimney that is sealed and capped may be lined with a listed uninsulated flexible metal vent. If the existing chimney will not accommodate a listed metal liner, either the chimney must be rebuilt to accommodate one of these liners or an alternate approved venting method must be found.

Insulation for the flexible vent pipe must be an encapsulated fiberglass sleeve recommended by the flexible vent pipe manufacturer. See FIGURE 24.

⚠ IMPORTANT

Once the venting system is installed, attach the "Disconnected Vent" warning sticker to a visible area of the plenum near the vent pipe. See FIGURE 23. The warning sticker is provided in the bag assembly. Order kit 66W04 for additional stickers.

⚠ WARNING

Asphyxiation hazard. The exhaust vent for this furnace must be securely connected to the furnace flue transition at all times.

VENT CONNECTION UPFLOW AND HORIZONTAL POSITION

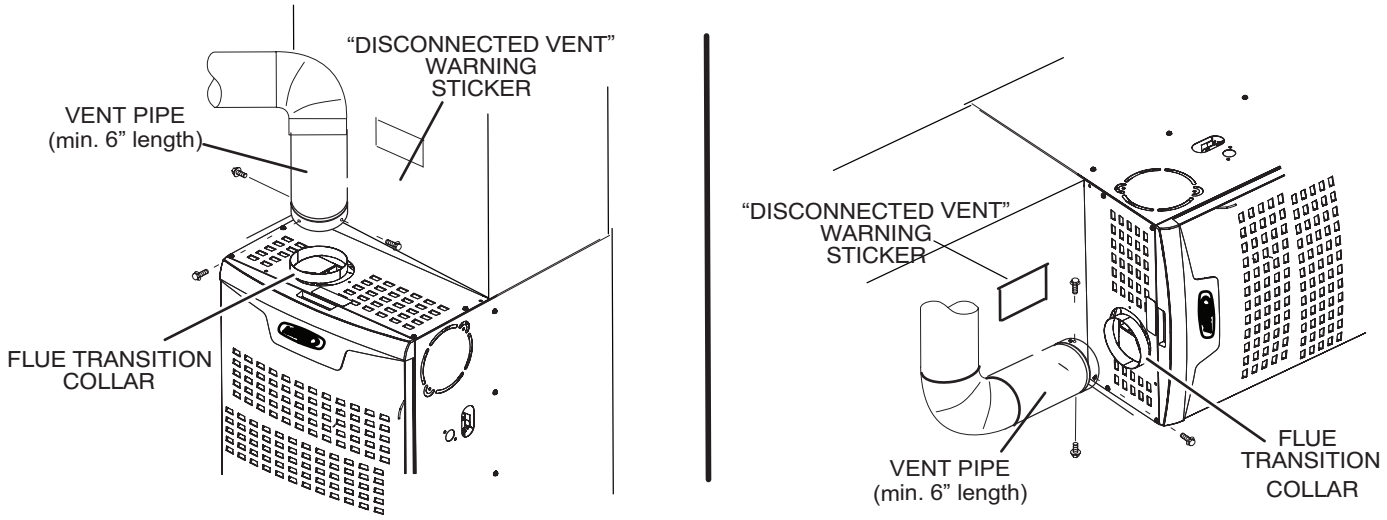

FIGURE 23

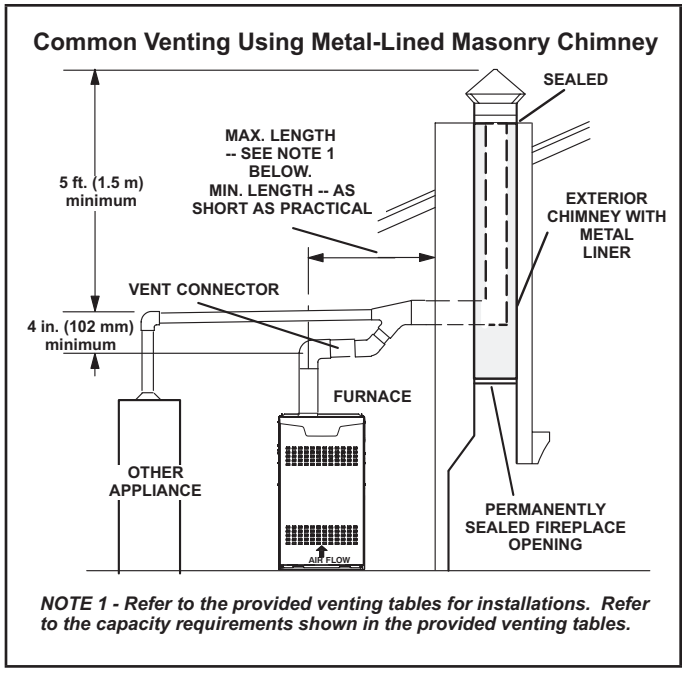

FIGURE 24

DO NOT insulate the space between the liner and the chimney wall with puffed mica or any other loose granular insulating material.

⚠ IMPORTANT

SINGLE appliance venting of a fan-assisted furnace into a tile-lined masonry chimney (interior or outside wall) is PROHIBITED. The chimney must first be lined with either type B1 vent or an insulated single wall flexible vent lining system which has been sized according to the provided venting tables and the vent pipe manufacturer's instructions.

A fan-assisted furnace may be commonly vented into an existing lined masonry chimney if the following conditions are met:

- The chimney is currently serving at least one drafthoodequipped appliance;
- The vent connectors and chimney are sized according to the provided venting tables.

If type B1 double-wall vent is used inside a chimney, no other appliance can be vented into the chimney. The outer wall of type B1 vent pipe must not be exposed to flue products. A type B1 vent or masonry chimney liner shall terminate above the roof surface with a listed cap or a listed roof assembly according to the terms of their respective listings and the vent manufacturer's instructions.

When inspection reveals that an existing chimney is not safe for the intended purpose, it shall be rebuilt to conform to nationally recognized standards, lined or relined with suitable materials, or replaced with a gas vent or chimney suitable for venting SL280UHVK series units. The chimney passageway must be checked periodically to ensure that it is clear and free of obstructions.

Do not install a manual damper, barometric draft regulator, or flue restrictor between the furnace and the chimney. Never connect a Category I appliance to a chimney that is servicing a solid-fuel appliance. If a fireplace chimney flue is used to vent this appliance, the fireplace opening must be permanently sealed.

A type B or listed chimney lining system that passes through an unused masonry chimney flue is not considered to be exposed to the outdoors.

General Venting Requirements

NOTE - *For any Low GWP refrigerant systems with exposed line set joints installed in the same space, each non-direct vent furnace system must have a refrigerant detection sensor installed below the level of the burners (See "SECONDARY SENSOR REQUIREMENTS" on page 43). Any direct vent furnace system is not subject to this requirement*

Vent all SL280UHVK furnaces according to these instructions:

1 - Vent diameter recommendations and maximum allowable piping runs are found in the provided venting tables.

2 - In no case should the vent or vent connector diameter be less than the diameter specified in the provided venting tables.

3 - The minimum vent capacity determined by the sizing tables must be less than the low fire input rating and the maximum vent capacity must be greater than the high fire input rating.

4 - Single appliance vents - If the vertical vent or tile-lined chimney has a larger diameter or flow area than the vent connector, use the vertical vent diameter to determine the minimum vent capacity and the vent connector diameter to determine the maximum vent capacity. The flow area of the vertical vent, however, shall not exceed 7 times the flow area of the listed appliance categorized vent area, drafthood outlet area or flue collar area unless designed according to approved engineering methods.

5 - Multiple appliance vents - The flow area of the largest section of vertical vent or chimney shall not exceed 7 times the smallest listed appliance categorized vent area, drafthood outlet area or flue collar area unless designed according to approved engineering methods.

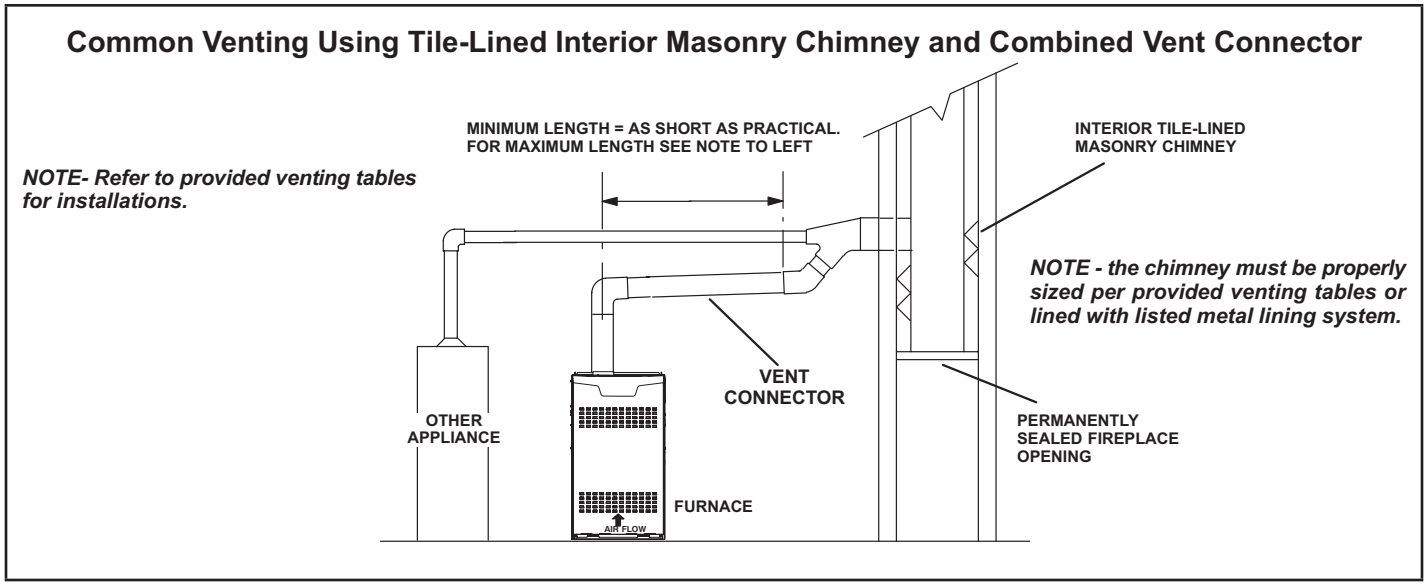

FIGURE 25

6 - The entire length of single wall metal vent connector shall be readily accessible for inspection, cleaning, and replacement.

7 - Single appliance venting configurations with zero lateral lengths (TABLE 3) is assumed to have no elbows in the vent system. For all other vent configurations, the vent system is assumed to have two 90° elbows. For each additional 90° elbow or equivalent (for example two 45° elbows equal one 90° elbow) beyond two, the maximum capacity listed in the venting table should be reduced by 10% (0.90 x maximum listed capacity).

8 - The common venting tables (TABLE 4 and TABLE 5) were generated using a maximum horizontal vent connector length of 1-1/2 feet (.46 m) for each inch (25 mm) of connector diameter as follows:

TABLE 2

Connector Diameter inches (mm)	Maximum Horizontal Connector Length feet (m)
3 (76)	4-1/2 (1.37)
4 (102)	6 (1.83)
5 (127)	7-1/2 (2.29)
6 (152)	9 (2.74)
7 (178)	10-1/2 (3.20)

9 - If the common vertical vent is offset, the maximum common vent capacity listed in the common venting tables should be reduced by 20%, the equivalent of two 90° elbows (0.80 x maximum common vent capacity). The horizontal length of the offset shall not exceed 1-1/2 feet (.46 m) for each inch (25 mm) of common vent diameter.

10 - The vent pipe should be as short as possible with the least number of elbows and angles required to complete the job. Route the vent connector to the vent using the shortest possible route.

11 - A vent connector shall be supported without any dips or sags and shall slope a minimum of 1/4 inch (6.4 mm) per linear foot (305 mm) of connector, back toward the appliance.

12 - Vent connectors shall be firmly attached to the furnace flue collar by self-drilling screws or other approved means, except vent connectors of listed type B vent material which shall be assembled according to the manufacturer's instructions. Joints between sections of single wall connector piping shall be fastened by screws or other approved means.

13 - When the vent connector used for Category I appliances must be located in or pass through a crawlspace, attic or other areas which may be cold, that portion of the vent connector shall be constructed of listed double-wall type B vent material or material having equivalent insulation qualities.

14 - All venting pipe passing through floors, walls, and ceilings must be installed with the listed clearance to combustible materials and be fire stopped according to local codes. In absence of local codes, refer to NFGC (Z223.1).

15 - No portion of the venting system can extend into, or pass through any circulation air duct or plenum.

16 - Vent connectors serving Category I appliances shall not be connected to any portion of mechanical draft systems operating under positive pressure such as Category III or IV venting systems.

17 - If vent connectors are combined prior to entering the common vent, the maximum common vent capacity listed in the common venting tables must be reduced by 10%, the equivalent of one 90° elbow (0.90 x maximum common vent capacity).

18 - The common vent diameter must always be at least as large as the largest vent connector diameter.

19 - In no case, shall the vent connector be sized more than two consecutive table size diameters over the size of the draft hood outlet or flue collar outlet.

20 - Do not install a manual damper, barometric draft regulator or flue restrictor between the furnace and the chimney.

21 - When connecting this appliance to an existing dedicated or common venting system, you must inspect the venting system's general condition and look for signs of corrosion. The existing vent pipe size must conform to these instructions and the provided venting tables. If the existing venting system does not meet these requirements, it must be resized.

TABLE 3

Capacity of Type B Double-Wall Vents with Type B Double-Wall Connectors
Serving a Single Category I Appliance

Height H (feet)	Lateral L (feet)	Vent and Connector Diameter - D (inches)							
		3 inch		4 inch		5 inch		6 inch	
		Appliance Input Rating in Thousands of Btu Per Hour							
		Min	Max	Min	Max	Min	Max	Min	Max
6	0	0	78	0	152	0	251	0	375
	2	13	51	18	97	27	157	32	232
	4	21	49	30	94	39	153	50	227
	6	25	46	36	91	47	149	59	223
8	0	0	84	0	165	0	276	0	415
	2	12	57	16	109	25	178	28	263
	5	23	53	32	103	42	171	53	255
	8	28	49	39	98	51	164	64	247
10	0	0	88	0	175	0	295	0	447
	2	12	61	17	118	23	194	26	289
	5	23	57	32	113	41	187	52	280
	10	30	51	41	104	54	176	67	267
15	0	0	94	0	191	0	327	0	502
	2	11	69	15	136	20	226	22	339
	5	22	65	30	130	39	219	49	330
	10	29	59	40	121	51	206	64	315
	15	35	53	48	112	61	195	76	301
20	0	0	97	0	202	0	349	0	540
	2	10	75	14	149	18	250	20	377
	5	21	71	29	143	38	242	47	367
	10	28	64	38	133	50	229	62	351
	15	34	58	46	124	59	217	73	337
	20	48	52	55	116	69	206	84	322
30	0	0	100	0	213	0	374	0	587
	2	9	81	13	166	14	283	18	432
	5	21	77	28	160	36	275	45	421
	10	27	70	37	150	48	262	59	405
	15	33	64	44	141	57	249	70	389
	20	56	58	53	132	66	237	80	374
	30	NA	NA	73	113	88	214	104	346

NOTE - *Single appliance venting configurations with zero lateral lengths are assumed to have no elbows in the vent system. For all other vent configurations, the vent system is assumed to have two 90° elbows. For each additional 90° elbow or equivalent (for example two 45° elbows equal one 90° elbow) beyond two, the maximum capacity listed in the venting table should be reduced by 10 percent (0.90 x maximum listed capacity).*

TABLE 4

Vent Connector Capacity

Type B Double-Wall Vents with Type B Double-Wall Connectors

Serving Two or More Category I Appliances

Height H (feet)	Lateral L (feet)	Vent and Connector Diameter - D (inches)							
		3 inch		4 inch		5 inch		6 inch	
		Appliance Input Rating in Thousands of Btu Per Hour							
		Min	Max	Min	Max	Min	Max	Min	Max
6	1	22	37	35	66	46	106	58	164
	2	23	41	37	75	48	121	60	183
	3	24	44	38	81	49	132	62	199
8	1	22	40	35	72	49	114	64	176
	2	23	44	36	80	51	128	66	195
	3	24	47	37	87	53	139	67	210
10	1	22	43	34	78	49	123	65	189
	2	23	47	36	86	51	136	67	206
	3	24	50	37	92	52	146	69	220
15	1	21	50	33	89	47	142	64	220
	2	22	53	35	96	49	153	66	235
	3	24	55	36	102	51	163	68	248
20	1	21	54	33	99	46	157	62	246
	2	2	57	34	105	48	167	64	259
	3	23	60	35	110	50	176	66	271
30	1	20	62	31	113	45	181	60	288
	2	21	64	33	118	47	190	62	299
	3	22	66	34	123	48	198	64	309

TABLE 5

Common Vent Capacity

Type B Double-Wall Vents with Type B Double-Wall Connectors

Serving Two or More Category I Appliances

Vent Height H (feet)	Vent and Connector Diameter - D (inches)							
	4 inch		5 inch		7 inch		7 inch	
	Appliance Input Rating in Thousands of Btu Per Hour							
	FAN + FAN	FAN + NAT	FAN + FAN	FAN + NAT	FAN + FAN	FAN + NAT	FAN + FAN	FAN + NAT
6	92	81	140	116	204	161	309	248
8	101	90	155	129	224	178	339	275
10	110	97	169	141	243	194	367	299
15	125	112	195	164	283	228	427	352
20	136	123	215	183	314	255	475	394
30	152	138	244	210	361	297	547	459

Removal of the Furnace from Common Vent

In the event that an existing furnace is removed from a venting system commonly run with separate gas appliances, the venting system is likely to be too large to properly vent the remaining attached appliances. Conduct the following test while each appliance is operating and the other appliances (which are not operating) remain connected to the common venting system. If the venting system has been installed improperly, you must correct the system as indicated in the general venting requirements section.

⚠ WARNING

CARBON MONOXIDE POISONING HAZARD

Failure to follow the steps outlined below for each appliance connected to the venting system being placed into operation could result in carbon monoxide poisoning or death.

The following steps shall be followed for each appliance connected to the venting system being placed into operation, while all other appliances connected to the venting system are not in operation:

1 - Seal any unused openings in the common venting system.

2 - Inspect the venting system for proper size and horizontal pitch. Determine that there is no blockage, restriction, leakage, corrosion, or other deficiencies which could cause an unsafe condition.

3 - Close all building doors and windows and all doors between the space in which the appliances remaining connected to the common venting system are located and other spaces of the building. Turn on clothes dryers and any appliances not connected to the common venting system. Turn on any exhaust fans, such as range hoods and bathroom exhausts, so they will operate at maximum speed. Do not operate a summer exhaus fan. Close fireplace dampers.

4 - Follow the lighting instructions. Turn on the appliance that is being inspected. Adjust the thermostat so that the appliance operates continuously.

5 - After the burner have operated for 5 minutes, test for leaks of flue gases at the draft hood relief opening. Use the flame of a match or candle.

6 - After determining that each appliance connected to the common venting system is venting properly, (step 3) return all doors, widows, exhaust fans, fireplace dampers, and any other gas-burning appliances to their previous mode of operation.

7 - If a venting problem is found during any of the preceding tests, the common venting system must be modified to correct the problem. Resize the common venting system to the minimum vent pipe size determined by using the appropriate tables in Appendix G. (These are in the current standards of the National Fuel Gas Code ANSI Z223.1.

Gas Piping

Gas supply piping should not allow more than 0.5”W.C. drop in pressure between gas meter and unit. Supply gas pipe must not be smaller than unit gas connection.

⚠ CAUTION

If a flexible gas connector is required or allowed by the authority that has jurisdiction, black iron pipe shall be installed at the gas valve and extend outside the furnace cabinet. The flexible connector can then be added between the black iron pipe and the gas supply line.

⚠ WARNING

Do not over torque (800 in-lbs) or under torque (350 in-lbs) when attaching the gas piping to the gas valve.

Gas Supply

1 - This unit is shipped standard for left or right side installation of gas piping (or top entry in horizontal applications) Connect the gas supply piping into the gas valve. The maximum torque is 800 in lbs and minimum torque is 350 in lbs when attaching the gas piping to the gas valve.

2 - When connecting the gas supply piping, consider factors such as length of run, number of fittings, and furnace rating to avoid excessive pressure drop. TABLE 6 lists recommended pipe sizes for typical applications.

3 - The gas piping must not run in or through air ducts, clothes chutes, gas vents or chimneys, dumb waiters, or elevator shafts.

4 - The piping should be sloped 1/4 inch (6.4 mm) per 15 feet (4.57 m) upward toward the meter from the furnace. The piping must be supported at proper intervals [every 8 to 10 feet (2.44 to 3.01 m)] with suitable hangers or straps. Install a drip leg in vertical pipe runs to the unit.

5 - A 1/8” N.P.T. plugged tap or pressure post is located on the gas valve to facilitate test gauge connection. See FIGURE 38.

6 - In some localities, codes may require the installation of a manual main shut-off valve and union (furnished by the installer) external to the unit. The union must be of the ground joint type’

⚠ IMPORTANT

Compounds used on threaded joints of gas piping must be resistant to the actions of liquified petroleum gases.

NOTE - *If emergency shutoff is necessary, shut off the main manual gas valve and disconnect main power to the furnace. The installer should properly label these devices.*

TABLE 6

Gas Pipe Capacity - ft3/hr (m3/hr)

Nominal Iron Pipe Size Inches (mm)	Internal Diameter inches (mm)	Length of Pipe - feet (m)									
		10 (3.048)	20 (6.096)	30 (9,144)	40 (12,192)	50 (15.240)	60 (18.288)	70 (21.336)	80 (24.384)	90 (27.432)	100 (30,480)
1/2 (12.7)	.622 (17.799)	172 (4.87)	118 (3.34)	95 (2.69)	81 (2.29)	72 (2.03)	65 (1.84)	60 (1.69)	56 (1.58)	52 (1.47)	50 (1.42)
3/4 (19.05)	.824 (20.930)	360 (10.19)	247 (7.000)	199 (5.63)	170 (4.81)	151 (4.23)	137 (3.87)	126 (3.56)	117 (3.31)	110 (3.11)	104 (2.94)
1 (25.4)	1.049 (26.645)	678 (19.19)	466 (13.19)	374 (10.59)	320 (9.06)	284 (8.04)	257 (7.27)	237 (6.71)	220 (6.23)	207 (5.86)	195 (5.52)
1-1/4 (31.75)	1.380 (35.052)	1350 (38.22)	957 (27.09)	768 (22.25)	657 (18.60)	583 (16.50)	528 (14.95)	486 (13.76)	452 (12.79)	424 (12.00)	400 (11.33)
1-1/2 (38.1)	1.610 (40.894)	2090 (59.18)	1430 (40.49)	1150 (32.56)	985 (27.89)	873 (24.72)	791 (22.39)	728 (20.61)	677 (19.17)	635 (17.98)	600 (17.00)
2 (50.8)	2.067 (52.502)	4020 (113.83)	2760 (78.15)	2220 (62.86)	1900 (53.80)	1680 (47.57)	1520 (43.04)	1400 (39.64)	1300 (36.81)	1220 (34.55)	1160 (32.844)
2-1/2 (63.5)	2.469 (67.713)	6400 (181.22)	4400 (124.59)	3530 (99.95)	3020 (85.51)	2680 (75.88)	2480 (70.22)	2230 (63.14)	2080 (58.89)	1950 (55.22)	1840 (52.10)

NOTE - *Capacity given in cubic feet (m3) of gas per hour and based on 0.60 specific gravity gas.*

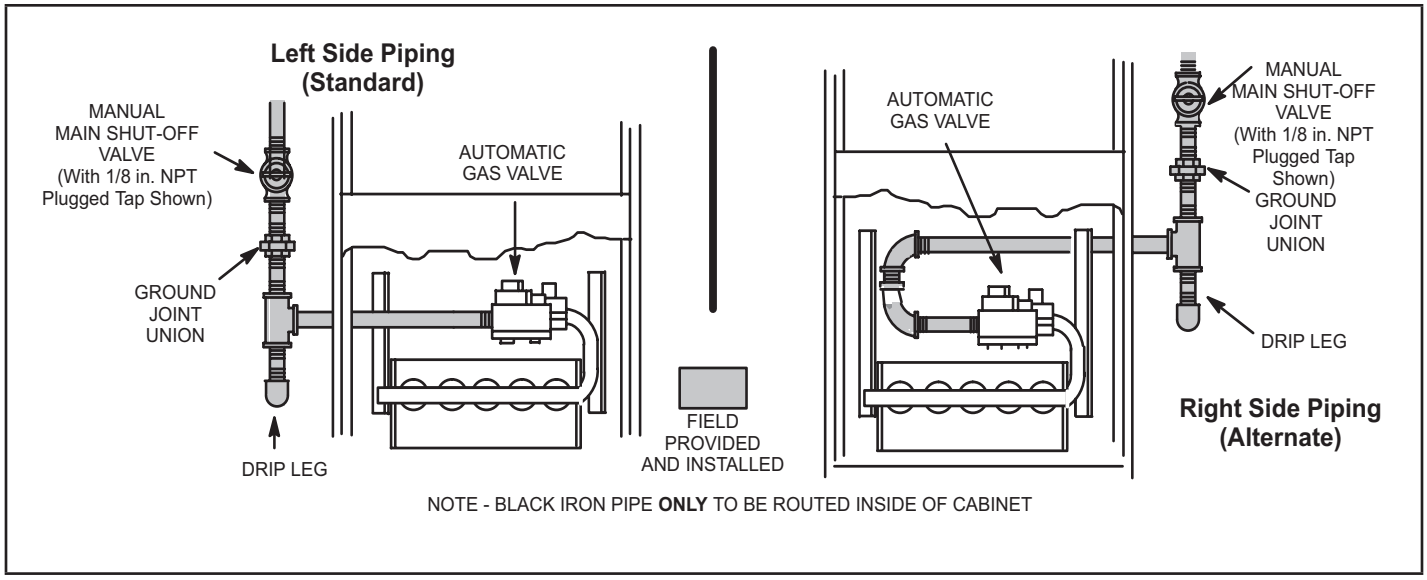

FIGURE 26

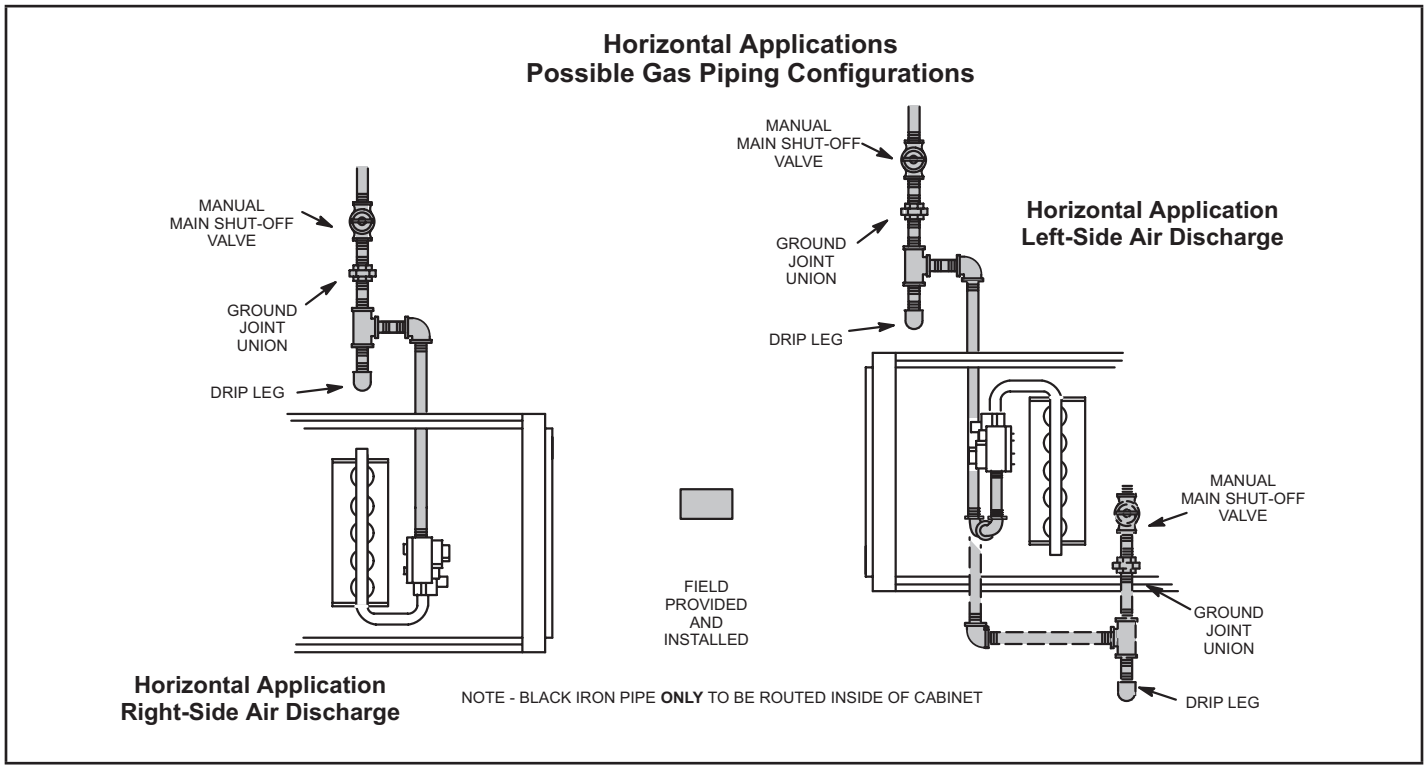

FIGURE 27

Leak Check

After gas piping is completed, carefully check all field-installed piping connections for gas leaks. Use a commercially available leak detecting solution specifically manufactured for leak detection. Never use an open flame to test for gas leaks.

NOTE - *If emergency shutoff is necessary, shut off the main manual gas valve and disconnect the main power to the furnace. The installer should properly label these devices.*

⚠ CAUTION

Some soaps used for leak detection are corrosive to certain metals. Carefully rinse piping thoroughly after leak test has been completed. Do not use matches, candles, flame or other sources of ignition to check for gas leaks.

The furnace must be isolated from the gas supply system by closing the individual manual shut-off valve during any gas supply system at pressures greater than or equal to ½ psig. (3.48 kPa, 14 inches w.c.). This furnace and its components are designed, manufactured and independently certified to comply with all applicable ANSI/CSA standards. A leak check of the furnace and its components is not required.

⚠ IMPORTANT

When testing pressure of gas lines, gas valve must be disconnected and isolated. See FIGURE 28. Gas valves can be damaged if subjected to pressures greater than 1/2 psig (3.48 kPa, 14 inches w.c.).

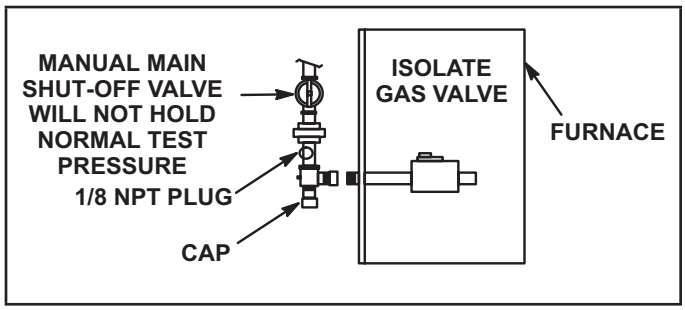

FIGURE 28

Electrical

⚠ WARNING

Electric Shock Hazard. Can cause injury or death. Unit must be properly grounded in accordance with national and local codes.

⚠ IMPORTANT

When matching this gas furnace with zoning, dual fuel or other 24V accessories, It is recommended to replace the factory installed transformer with kit 27J32.

Kit 27J32 contains a 75VA transformer, so you do not overload the original 40VA transformer.

⚠ WARNING

Fire Hazard. Use of aluminum wire with this product may result in a fire, causing property damage, severe injury or death. Use copper wire only with this product.

⚠ CAUTION

Failure to use properly sized wiring and circuit breaker may result in property damage. Size wiring and circuit breaker(s) per Product Specifications bulletin (EHB) and unit rating plate.

The unit is equipped with a field make-up box on the left and side of the cabinet. The make-up box may be moved to the right side of the furnace to facilitate installation. If the make-up box is moved to the right side, clip the wire ties that bundle the wires together. The excess wire must be pulled into the blower compartment. Secure the excess wire to the existing harness to protect it from damage.

INTERIOR MAKE-UP BOX INSTALLATION

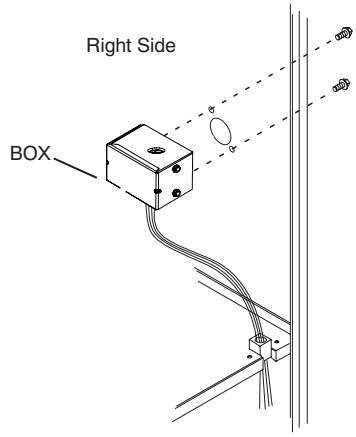

FIGURE 29

See FIGURE 30, FIGURE 31 and FIGURE 32 for communicating thermostat wiring in communicating applications. TABLE 12 shows DIP switch and on-board link settings for non-communicating thermostat applications. See FIGURE 34 for typical wiring schematic..

1 - The power supply wiring must meet Class I restrictions. Protected by either a fuse or circuit breaker, select circuit protection and wire size according to unit nameplate.

⚠ CAUTION

Failure to use properly sized wiring and circuit breaker may result in property damage. Size wiring and circuit breaker(s) per Product Specifications bulletin (EHB) and unit rating plate.

NOTE - Unit nameplate states maximum current draw. Maximum over-current protection allowed is shown in TABLE 7.

TABLE 7

SL280UHK	Maximum Over-Current Protection (Amps)
070V36A, 09036B	15
090V48B, 090V60C, 110V60C, 135V60D	20

2 - Holes are on both sides of the furnace cabinet to facilitate wiring.

3 - Install a separate (properly sized) disconnect switch near the furnace so that power can be turned off for servicing.

4 - Before connecting the thermostat or the power wiring, check to make sure the wires will be long enough for servicing at a later date. Remove the blower access panel to check the length of the wire.

5 - Complete the wiring connections to the equipment. Use the provided unit wiring diagram and the field wiring diagrams shown in TABLE 12. Use 18-gauge wire or larger that is suitable for Class II rating for thermostat connections.

6 - Electrically ground the unit according to local codes or, in the absence of local codes, according to the current National Electric Code (ANSI/NFPA No. 70). A green ground wire is provided in the field make-up box.

***NOTE -** The SL280UHVK furnace contains electronic components that are polarity sensitive. Make sure that the furnace is wired correctly and is properly grounded.*

⚠ WARNING

Electric Shock Hazard. Can cause injury or death. Unit must be properly grounded in accordance with national and local codes.

7 - One line voltage “ACC” 1/4” spade terminal is provided on the furnace integrated control. Any electronic air cleaner or other accessory rated up to one amp can be connected to this terminal with the neutral leg of the circuit being connected to the one of the provided neutral terminals. See FIGURE 33 for control configuration. This terminal is energized when the indoor blower is operating.

8 - An unpowered, normally open (dry) set of contacts with a 1/4” spade terminal “HUM” are provided for humidifier connections and may be connected to 24V or 120V. Any humidifier rated up to one amp can be connected to these terminals. In 120V humidifier applications the neutral leg of the circuit can be connected to one of the provided neutral terminals. This terminal is energized in the heating mode.

9 - Install the room thermostat according to the instructions provided with the thermostat. See TABLE 12 for field wiring connections in varying applications. If the furnace is being matched with a heat pump, refer to the instruction packaged with the dual fuel thermostat.

Thermostat Selection

⚠ CAUTION

Field wiring for both communicating and non-communicating applications is illustrated in diagrams, which begin on Page 275..

Non-Communicating

In non-communicating applications the SL280UHVK is designed to operate in a SINGLE-STAGE mode or TWOSTAGE mode using a conventional thermostat.

For optimal performance in non-communicating applications, Lennox recommends use of a ComfortSense® 7000 high quality electronic digital thermostat or any other with adjustable settings for 1st stage / 2nd stage on / off differentials and adjustable stage timers.

Lennox recommends the following two-stage thermostat settings:

First heat stage differential set to 1/2 to 1 degree F; second heat stage differential set to 1/2 or 1 degree F; second heat stage upstage timer disabled, or set to maximum (1 hr minimum).

Communicating

In communicating applications a communicating thermostat must be used. Refer to the instructions provided with the thermostat for installation, set-up and operation. In communicating system all unused thermostat wire in the wire bundle needs to be terminated inside and out. The extra wires can terminate on the ‘C” terminal of the thermostat communication terminal strip. (RSBus). Using an additiona wire come off ”C” terminal and wire nut all the extra wires together. Termination on the outdoor control must match the indoor control.

Indoor Blower Speeds

Non-Communicating

1 - When the thermostat is set to “FAN ON,” the indoor blower will run continuously at a field selectable percentage of the second-stage cooling speed when there is no cooling or heating demand. The factory defaul setting is 38% of cool speed.

2 - When the SL280UHVK is running in the heating mode, the indoor blower will run on the heating speed designated by the positions of DIP switches 11, 12 and 13. First stage heating will run at 91% heat speed.

3 - When there is a cooling demand, the indoor blower will run on the cooling speed designated by the positions of DIP switches 5 and 6. First stage cooling will run at 70% cool speed.

Communicating

NOTE - *When the SL280UHVK is used with a communicating thermostat, proper indoor blower speed selections are made by the thermostat*.

1 - When the thermostat is set to “FAN ON,” the indoor blower will run at setting determined during system configuration. See TABLE 30 on page 53 for allowable circulation speeds.

2 - When there is a heating demand the fan will run on heating speeds for firing rate.

3 - When there is a cooling demand, the fan will run on the first stage and second stage cooling speed set using the thermostat in the installer setup mode. The factory default is based upon 400 CFM a ton.

Generator Use - Voltage Requirements

The following requirements must be kept in mind when specifying a generator for use with this equipment:

- The furnace requires 120 volts (Range: 102 volts to 132 volts)
- The furnace operates at 60 Hz + 5% (Range: 57 Hz to 63 Hz)
- The furnace integrated control requires both correct polarity and proper ground. Both polarity and proper grounding should be checked before attempting to operate the furnace on either permanent or temporary power
- Generator should have a wave form distortion of less than 5% THD (total harmonic distortion

Communicating Enabled Furnace and Non-Communicating Outdoor Unit

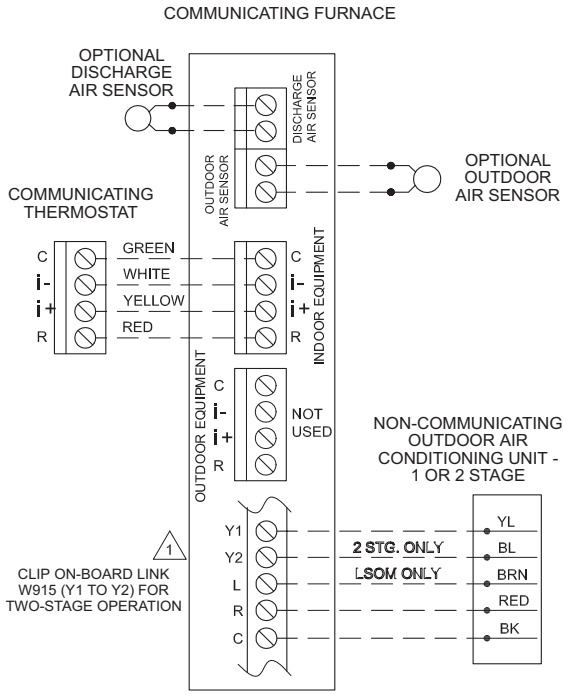

Communicating Enabled Furnace and Communicating Enabled Outdoor Unit

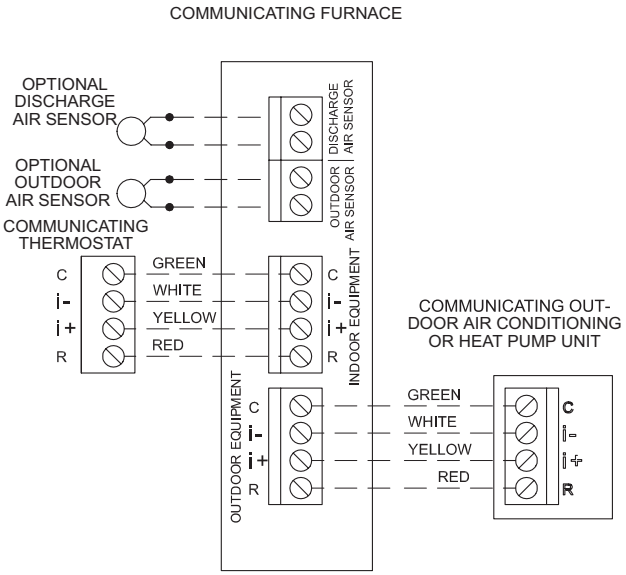

Communicating systems four thermostat wires between the thermostat and the furnace/air handler control and four wires between the outdoor unit and the furnace/air handler control. When a thermostat cable with more than four wires is used, the extra wires must be properly connected to avoid electrical noise. The wires must not be left disconnected.

Use wire nuts to bundle the four unused wires at each end of the cable. A single wire should then be connected to the indoor unit end of the wire bundle and attached to the “C” terminals as shown below.

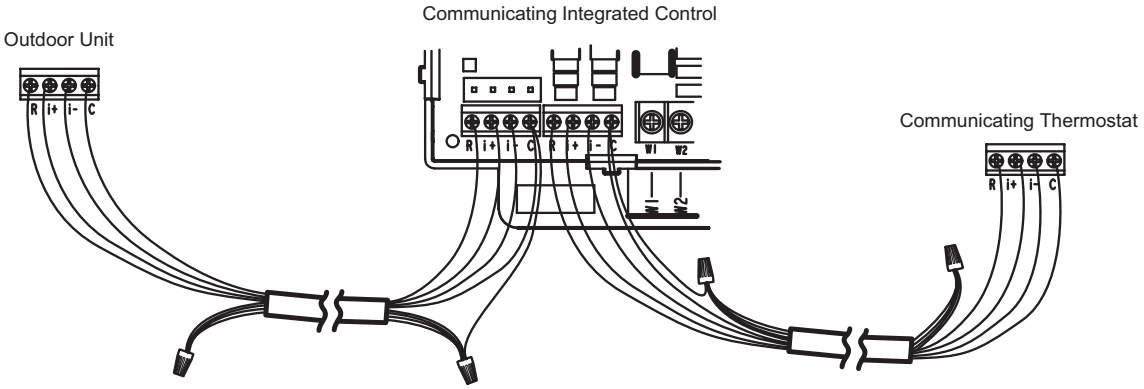

FIGURE 30

Optional Accessories for use with any Communicating System

NOTE: ICOMMUNICATING THERMOSTAT SENSES HUMIDITY & CONTROLS HUM CONTACTS TO CYCLE HUMIDIFIER BASED ON DEMAND. NO OTHER CONTROL OR HUMIDISTAT REQUIRED.

OPTIONAL OUTDOOR AIR SENSOR FOR USE WITH HUMIDIFIER (IF NOT ALREADY IN THE SYSTEM FOR OTHER FUNCTIONS. BUILT INTO ALL COMMUNICATING ENABLED OUT DOOR UNITS).

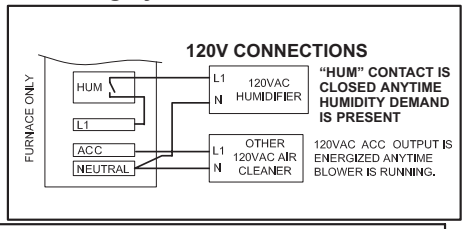

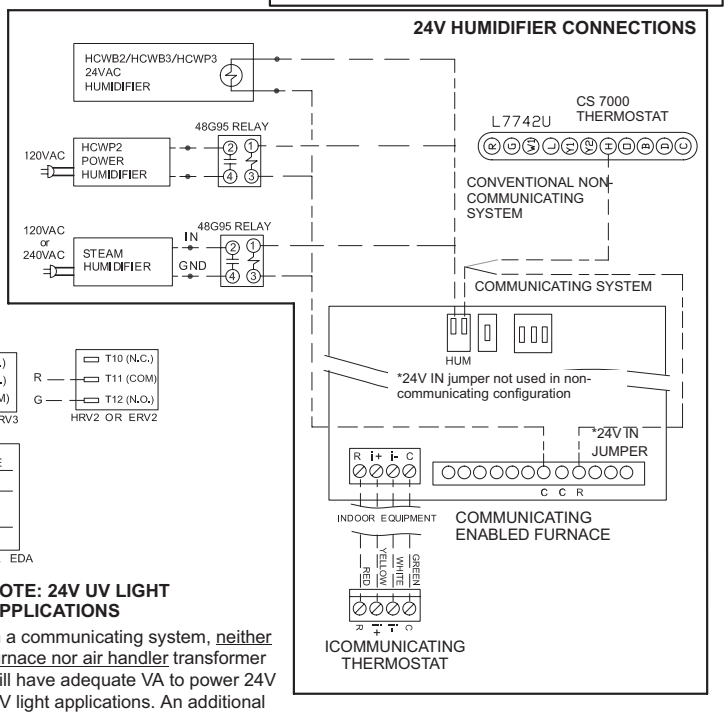

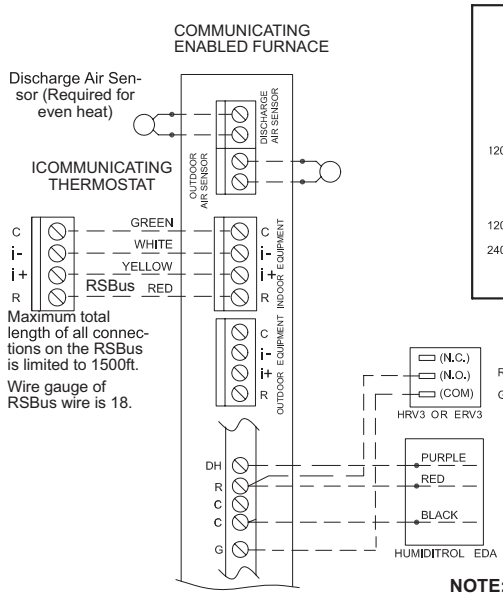

NOTE: 24V UV LIGHT APPLICATIONS

In a communicating system, neither furnace nor air handler transformer will have adequate VA to power 24V UV light applications. An additional transformer for UV light applications is required.

HEPA BYPASS FILTER X2680 HEPA INTERLOCK KIT

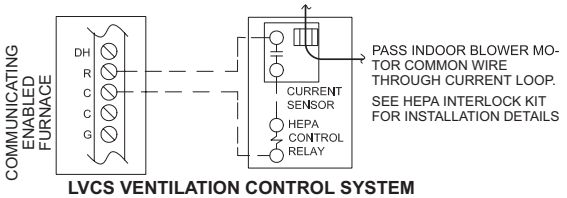

LVCS VENTILATION CONTROL SYSTEM

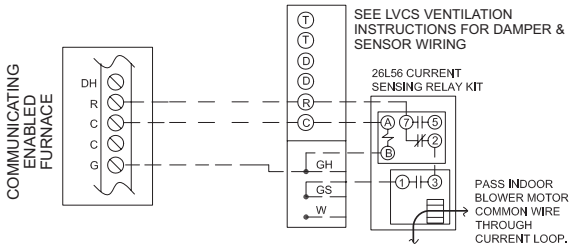

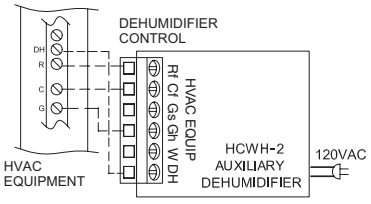

FIGURE 31

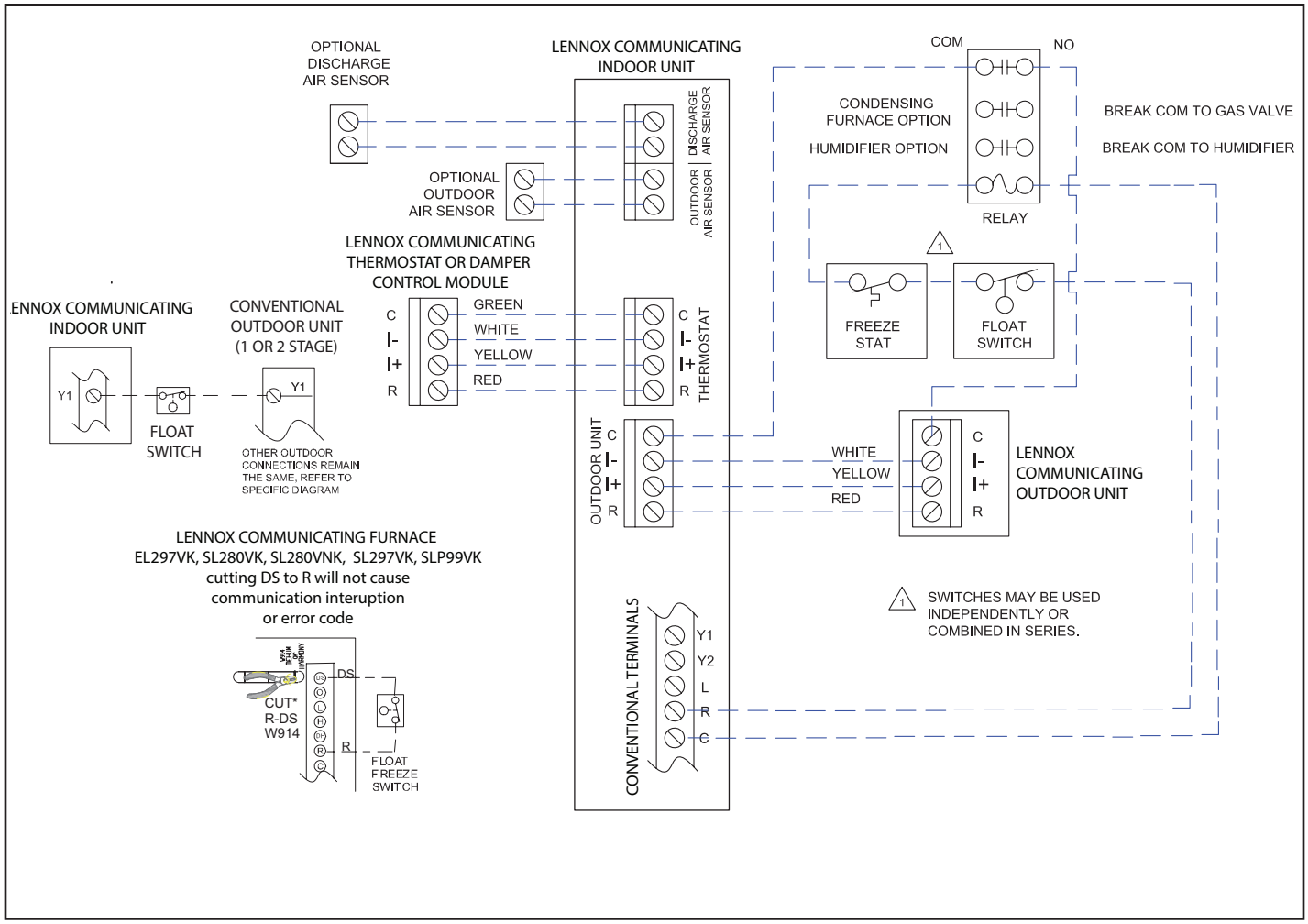
OPTIONAL
DISCHARGE
AIR SENSOR
LENNOX COMMUNICATING
INDOOR UNIT
DISCHARGE AIR SENSOR
OUTDOOR AIR SENSOR
OPTIONAL
OUTDOOR
AIR SENSOR
LENNOX COMMUNICATING
THERMOSTAT OR DAMPER
CONTROL MODULE
C
I-
I+
R
GREEN
WHITE
YELLOW
RED
THERMOSTAT
ENNOX COMMUNICATING
INDOOR UNIT
Y1
FLOAT
SWITCH
CONVENTIONAL
OUTDOOR UNIT
(1 OR 2 STAGE)
Y1
OTHER OUTDOOR
CONNECTIONS REMAIN
THE SAME, REFER TO
SPECIFIC DIAGRAM
OUTDOOR UNIT
LENNOX COMMUNICATING FURNACE
EL297VK, SL280VK, SL280VNK, SL297VK, SLP99VK
cutting DS to R will not cause
communication interuption
or error code
CUT*
R-DS
W914
DS
R
FLOAT
FREEZE
SWITCH
CONVENTIONAL TERMINALS
Y1
Y2
L
R
C
COM
NO
CONDENSING
FURNACE OPTION
HUMIDIFIER OPTION
RELAY
BREAK COM TO GAS VALVE
BREAK COM TO HUMIDIFIER
1
FREEZE
STAT
FLOAT
SWITCH
WHITE
YELLOW
RED
LENNOX
COMMUNICATING
OUTDOOR UNIT
1
SWITCHES MAY BE USED
INDEPENDENTLY OR
COMBINED IN SERIES.

FIGURE 32

Ignition Control

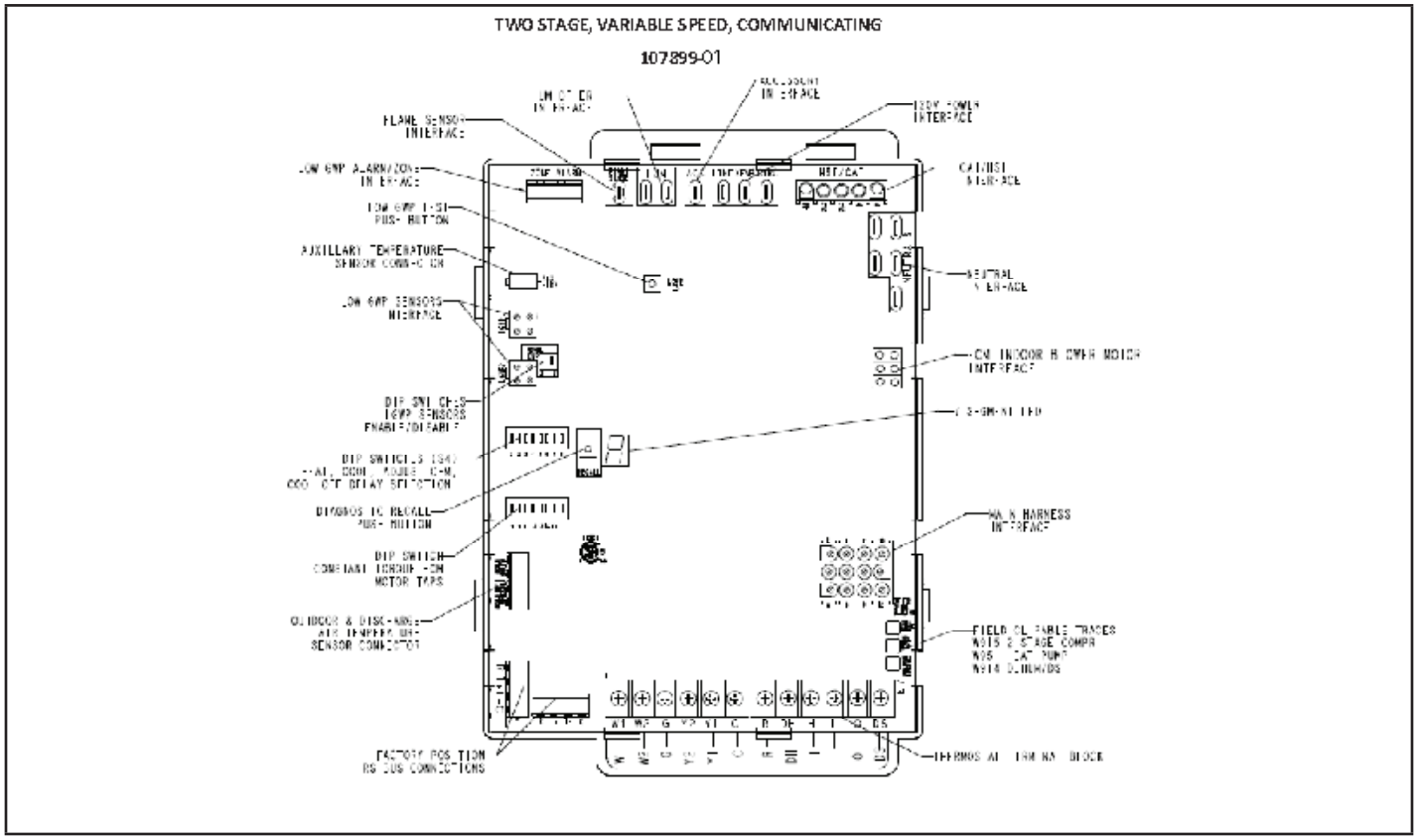

FIGURE 33

TABLE 8

1/4"QUICK CONNECT TERMINALS	
HUM	120 VAC OUTPUT TO HUMIDIFIER
XMFR	120 VAC OUTPUT TO TRANSFORMER
L1	120 VAC INPUT TO CONTROL
CIRC	120 VAC OUTPUT TO CIRCULATING BLLOWER
ACC	120 VAC TO ELECTRCAL AIR CLEANER
NEUTRALS (5)	120 VAC NEUTRAL

TABLE 9

12 PIN MAIN HARNESS	
1	MAIN VALVE HIGH
2	HIGH PRESSURE SWITCH
3	ROLLOUT INPUT
4	GROUND
5	24VAC HOT
6	HIGH LIMIT SWITCH
7	MAIN VALVE LOW
8	MAIN VALVE COMMON
9	24VAC RETURN
10	GROUND
11	ROLLOUT SWITCH OUTPUT
12	LOW PRESSURE SWITCH

TABLE 10

THERMOSTAT INPUT TERMINALS	
W1	LOW STAGE HEAT
W2	HIGH STAGE HEAT
G	FAN
Y1	LOW STAGE COOL
Y2	HIGH STAGE COOL24
C	THERMOSTAT COMMON / GROUND
R	24VAC POWER TO THE THERMOSTAT
DH	DEHUMIDFICATION (COMM ONLY)
H	24V HUMIDIFIER OUTPUT
L	LSOM (COMM ONLY)
O	HEAT PUMP REVERSING VALVE
DS	DEHUMIDIFICATION (NON-COMM ONLY)

TABLE 11

LOW GWP INTERFACE	
LGWP1	LOW GWP SENSOR #1 INTERFACE
LGWP2	LOW GWP SENSOR # 2 INTERFACE
ALARM	INTERFACE TO LOW GWP LEAK AUDIBLE ALARM (DRY CONTACT)
ZONE	INTERFACE TO ZONING CONTROL (DRY CONTACT)
LGWP TEST	PUSH BUTTON TO TEST LOW GWP FUNCTIONALITY

TABLE 12
Field Wiring Applications With Conventional Thermostat

Thermostat	DIP Switch Settings and On-Board Links		Wiring Connections
	DIP Switch 1 Thermostat Heating Stages	On Board Links Must Be Cut To Select System Options	
1 Heat / 1 Cool *NOTE - Use DIP switch 2 to set second-stage heat ON delay. OFF-7 minutes. ON-12 minutes.* (L40 T-stat)	ON	DO NOT CUT ANY ON-BOARD LINKS 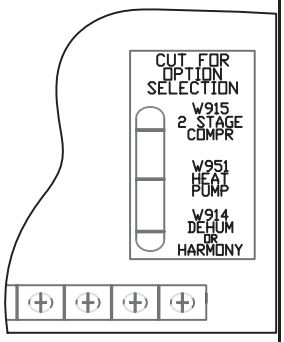	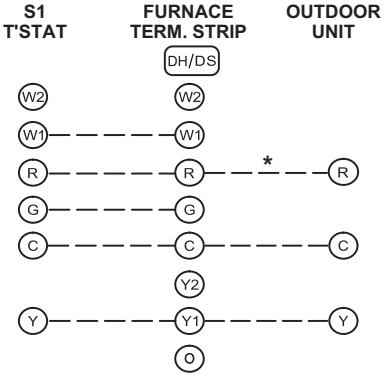
1 Heat / 2 Cool *NOTE - Use DIP switch 2 to set second-stage heat ON delay. OFF-7 minutes. ON-12 minutes.* (M30 T-stat)	ON	CUT ON-BOARD LINK W915 2 STAGE COMPR 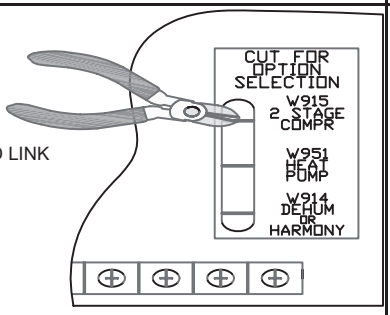	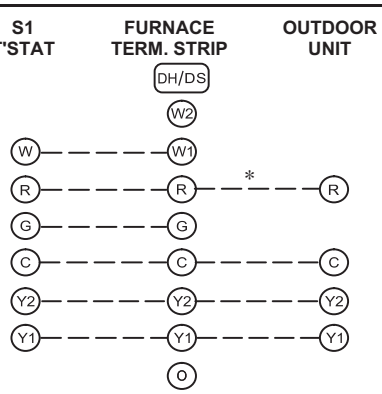
1 Heat / 2 Cool with t'stat with humidity control *NOTE - Use DIP switch 2 to set second-stage heat ON delay. OFF-7 minutes. ON-12 minutes.* (M30 T-stat)	ON	CUT ON-BOARD LINK W915 2 STAGE COMPR CUT ON-BOARD LINK W914 DEHUM OR HARMONY 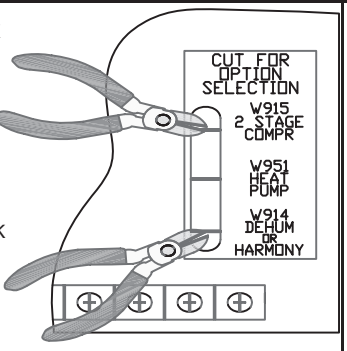	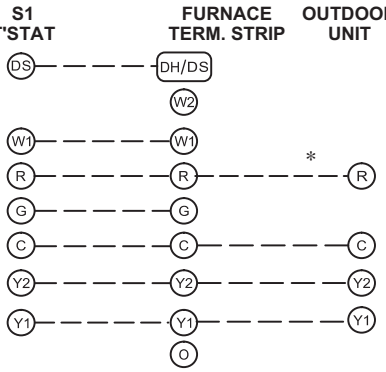

** Not required on all units.*

TABLE 12
Field Wiring Applications With Conventional Thermostat (Continued)

Thermostat	DIP Switch Settings and On-Board Links		Wiring Connections
	DIP Switch 1 Thermostat Heating Stages	On Board Links Must Be Cut To Select System Options	
2 Heat / 2 Cool (M30 T-stat)	OFF	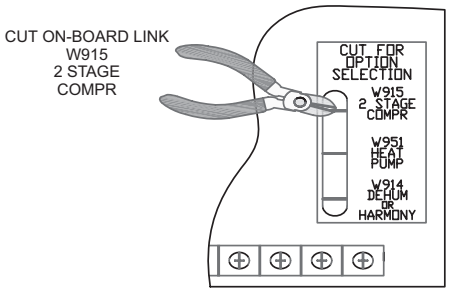	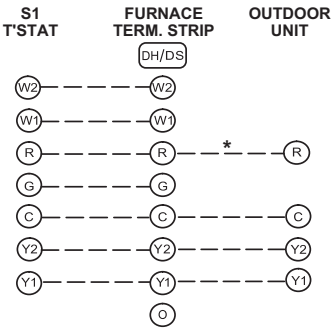
2 Heat / 2 Cool with t'stat with humidity control (M30 T-stat)	OFF	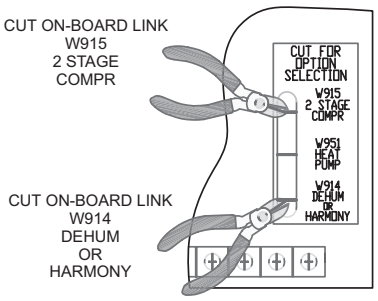	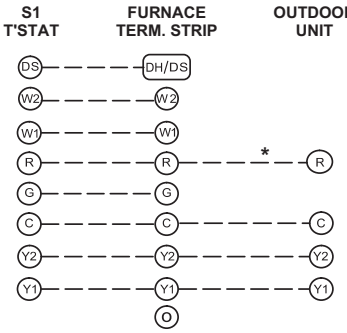
2 Heat / 1 Cool with t'stat with humidity control (M30 T-stat)	OFF	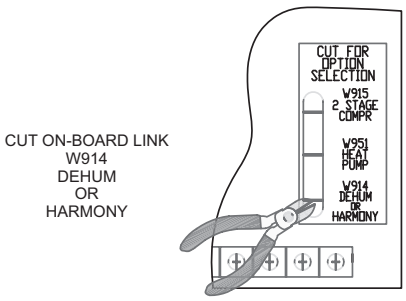	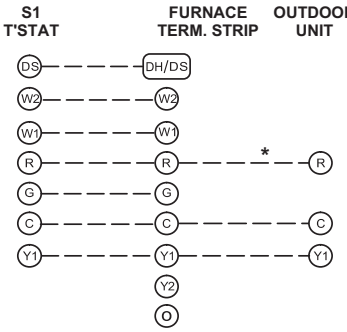
2 Heat / 1 Cool (M30 T-stat)	OFF	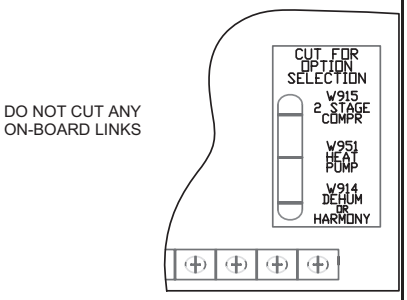	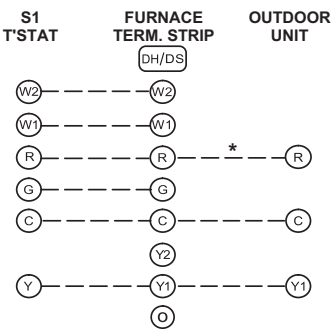

** Not required on all units.*

TABLE12

Field Wiring Applications With Conventional Thermostat (Continued)

Thermostat	DIP Switch Settings and On-Board Links		Wiring Connections
	DIP Switch 1 Thermostat Heating Stages	On Board Links Must Be Cut To Select System Options	
Dual Fuel Single Stage Heat Pump (M30 T-stat) thermostat w/ dual fuel capabilities Capable of 2 stage gas heat control	OFF	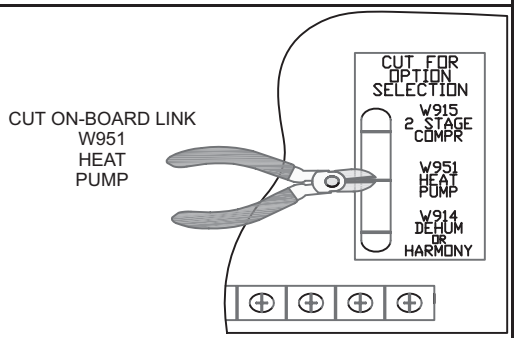	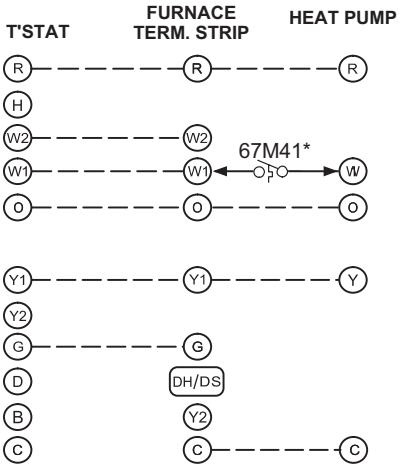
Dual Fuel Two Stage Heat Pump (M30 T-stat) thermostat w/ dual fuel capabilities Capable of 2 stage gas heat control	OFF	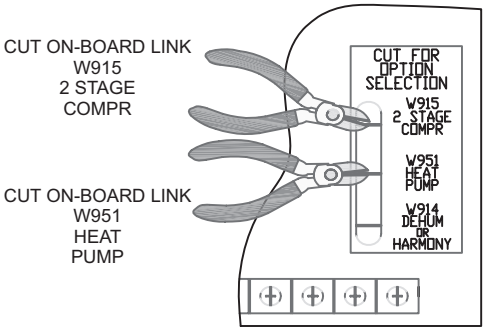	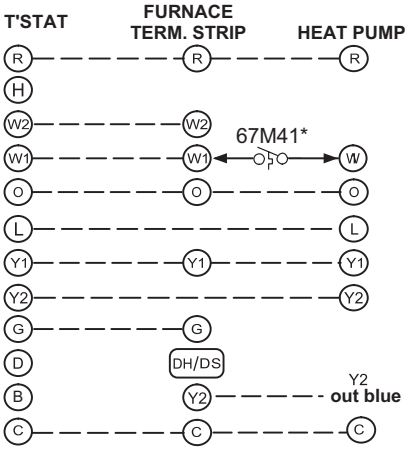

** Connect W1 to W1 ONLY if using defrost tempering kit 67M41*

*NOTE - **Do NOT** make a wire connection between the room thermostat L terminal and the L terminal of the furnace integrated control.*

TABLE 12

Field Wiring Applications With Conventional Thermostat (Continued)

Thermostat	DIP Switch Settings and On-Board Links		Wiring Connections
	DIP Switch 1 Thermostat Heating Stages	On Board Links Must Be Cut To Select System Options	
Dual Fuel Single Stage Heat Pump (M30 T-stat) thermostat w/ dual fuel capabilities Capable of 2 stage gas heat control w/dehumidification control	OFF	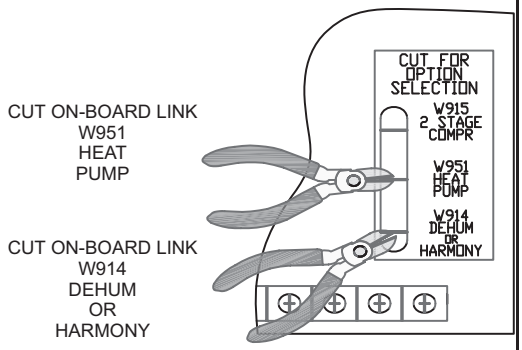	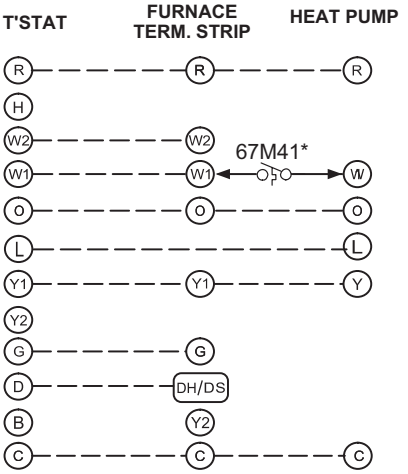
Dual Fuel Two Stage Heat Pump (M30 T-stat) thermostat w/ dual fuel capabilities Capable of 2 stage gas heat control w/dehumidification	OFF	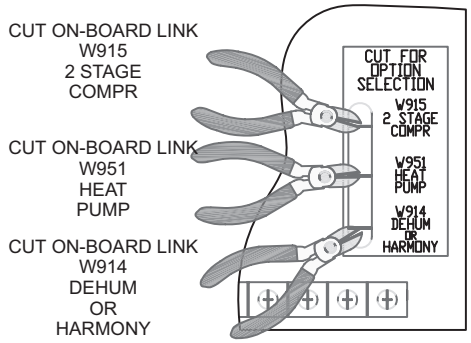	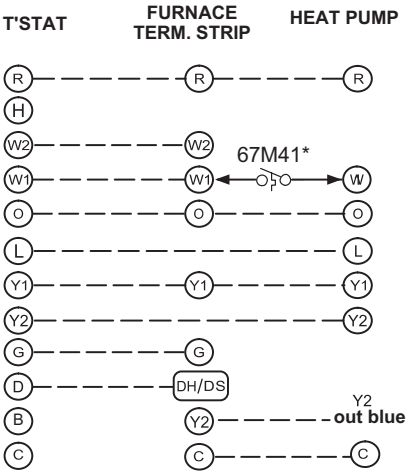

** Connect W1 to W1 ONLY if using defrost tempering kit 67M41*

*NOTE - **Do NOT** make a wire connection between the room thermostat L terminal and the L terminal of the furnace integrated control.*

Wiring Diagram

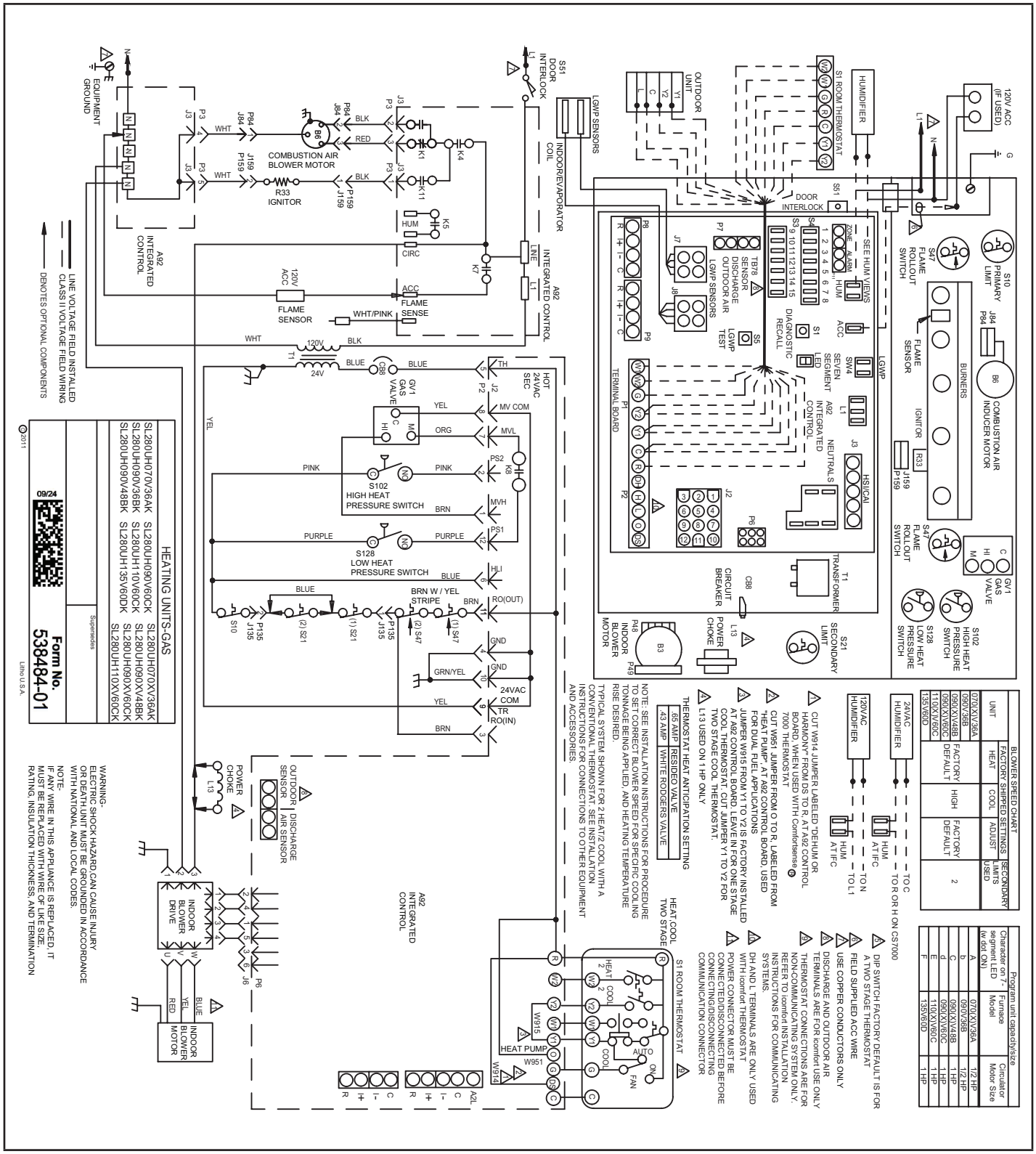

FIGURE 34

Ignition Control Diagnostic Codes

DIAGNOSTIC CODES / STATUS OF FURNACE	CODE
IDLE MODE (DECIMALBLINKS AT 1 HERTZ -- 0.5 SECONDS ON, 0.5 SECONDS OFF	.
INDOOR BLOWER OPERATION: CONTINUOUS FAN MODE (COSTANT TORQUE ONLY) INDOOR BLOWER OPERATION: FOLLOWED BY CFM SETTING FOR INDOOR BLOWER (1 SECOND ON, 0.5 SECOND OFF) / CFM SETTING FOR MODE DISPLAYED (VARIALBE SPEED ONLY)	A
COOLING STAGE (1 SECOND ON, 0.5 SECOND OFF) 1 OR 2 DISPLAYED / PAUSE / REPEAT CODES. VARIABLE SPEED ONLY	C
GAS HEAT (1 SECOND ON, 0.5 SECOND OFF) PAUSE / CFM DISPLAYED / PAUSE / REPEAT CODES BLINKING - IGNITION	H
HEAT PUMP STAGE (1 SECOND ON, 0.5 SECOND OFF) 1 OR 2 DISPLAYED / PAUSE / CFM SETTING DISPLAYED / PAUSE / REPEAT CODES	h
DEFROST MODE	dF
ERROR/FAULT CONDTION	**CODE**
NO ERROR IN THE MEMORY	E000
ELECTRICAL FAULTS (WAIT FOR RECOVERY)	
AC LINE VOLTAGE LOW	E110
LINE VOLTAGE POLARITY REVERSED	E111
EARTH GROUND NOT DETECTED	E112
AC LINE VOLTAGE HIGH	E113
LINE VOLTAGE FREQUENCY UOT OF RANGE	E114
LOW 24V - CONTROLWILL RESTART IF THE ERROR RECOVERS	E115
HARDWARE FAULT (5 MINUTES LOCKOUT)	
CONTROL HARDWARE (INCLUDE A/D ELECTRONICS AND FLAME TEST) FAILURE	E125
HARD LOCKOUT FAULT	
ROLLOUT OPEN OR PREVIOUSLY OPENED	E200
GAS VALVE/PRESSURE SWITCH/LIMT FAULTS (wait for recovery)	
GAS VALVE RELAY (1ST OR 2ND STAGE) PROBLEM	E204
GAS VALVE 2ND STAGE BRELAY PROBLEM	E206
LOW PRESSURE SW FAILED TO CLOSE (STUCK OPEN)	E223
LOW PRESSURE SW FAILED TO OPEN (STUCK CLOSED)	E224
HIGH PRESSURE SW FAILED TO CLOSE (STUCK OPEN)	E225
HIGH PRESSURE SW FAILED TO OPEN (STUCK CLOSED)	E226
LOW PRESSURE SWITCH OPENED IN RUN OR TFI	E227
FLAME SENSE OUT OF SEQUENCE-STILL PRESENT	E241
PRIMARY LIMIT SWITCH OPENED	E250
RSBUS COMMUNICATION CODES	
DEVICE COMMUNIATION PROBLEM - NO OTHER DEVICES ON BUS	E105
UNRESPONSIVE DEVICE	E120
ACTIVE SUBNETCONTROLLER MISSING FOR MORE THAN 3 MINUTES	E124
OUTDOOR UNITS CODES	
RELAY Y1 STUCK	E344
RELAY O FAILURE	E345
OUTDOOR AIR TEMPOERATURE SENSOR FAILURE	E180
RELAY Y1 FAILURE - RELAY ENERGIZED BUT NO INPUT SENSED	E347
RELAY Y2 FAILURE - RELAY ENERGIZED BUT NO INPUT SENSED	E348
INTERLOCK SWITCH (DS TERMINAL) SENSED OPEN (COMMUNCATING MODE ONLY)	E370

Ignition Control Diagnostic Codes (continued)

SOFT LOCKOUT FAULTS (60 MINUTES)	
UNABLE TO COMMUNICATE WITH CIRCULAR MOTOR	E201
GAS VALVE RELAY (1ST OR 2ND STAGE) CONTACT SHORTED	E205
HOT SURFACE IGNITOR (HSI) SENSED OPEN	E207
SOFT LOCKOUT-FLAME FAILURE ON IGNITION, IGNITION RETRY>MAX, LAST FAILED RETRY DUE TO FLAME FAILURE	E270
SOFT LOCKOUT-PRESSURE SWITCH OPEN, IGNITION RETRY>MAX, LAST FAILED RETRY DUE TO LPSW OPEN	E271
SOFT LOCKOUT-PRESSURE SWITCH OPEN, IN RUN MODE HEATING RECYCLES>MAX, LAST FAILED RETRY DUE TO LPSW OPEN	E272
SOFT LOCKOUT-FLAME FAILURE IN RUN MODE,HEATING RECYCLES>MAX, LAST FAILED RETRY DUE TO LOSS OF FLAME	E273
SOFT LOCKOUT-LIMIT OPEN > 3 MINUTES	E274
SOFT LOCKOUT-FLAME OUT OF SEQUENCE AND IS GONE	E275
IGNITOR CIRCUIT FAULT-FAILED IGNITOR OR TRIGGERING CIRCUITRY.	E290
INDOOR BLOWER UNABLE TO START	E292
PERFORMANCE WARNING	
POOR GROUND DETECTED	E117
IGNTION ON HIGH FIRE	E229
LOW FLAME CURRENT IN HEATING MODE	E240
NON-VOLATILE DATA CORRUPTION	E131
LOW FLAME CURRENT IN HEATING MODE	E240
INDOOR BLOWER MOTOR TEMPERATURE TOO HIGH	E295
DISCHARGE AIR SENSOR FAILURE - NO ERROR IF JUST DISCONNECTED, ONLY SHOW IF SHORTED OR OUT OF RANGE	E310
RESTRICTED AIRFLOW HEATING, HEAT FIRING RATE REDUCED TO MATCH CFM	E311
RESTRICTED AIRFLOW COOLING OR CONTINUOUS FAN MODE - INFORMATION ONLY	E312
INDOOR OUTDOOR UNIT CAPACITY MISMATCH	E313
LOW GWP REFRIGERANT FAULTS	
REFRIGERANT LEAK DETECTED, THERMOSTAT LOCKOUT	E150
REFRIGERANT LEAK DETECTOR SENSOR #1 FAULT	E151
REFRIGERANT LEAK DETECTOR SENSOR #2 FAULT	E152
REFRIGERANT LEAK DETECTOR SENSOR #1 COMM. LOST	E154
REFRIGERANT LEAK DETECTOR SENSOR #2 COMM. LOST	E155
REFRIGERANT LEAK DETECTOR SENSOR #1 TYPE INCORRECT	E160
REFRIGERANT LEAK DETECTOR SENSOR #2 TYPE INCORRECT	E161
REFRIGERANT LEAK DETECTOR CONTROL FAILURE	E163
LOW GWP TEST	E164
LOW GWP RELAY STUCK	E390

Ignition Control DIP Switch Settings - Conventional Thermostat (non-communicating)

SL280UHVK units are equipped with a two-stage, variable speed integrated control. This control manages ignition timing, heating mode fan off delays and indoor blower speeds based on selections made using the control dip switches and jumpers. The control includes an internal watchguard feature which automatically resets the ignition control when it has been locked out. After one hour of continuous thermostat demand for heat, the watchguard will break and remake thermostat demand to the furnace and automatically reset the control to relight the furnace.

Note: *All communicating settings are set at the thermostat. See thermostat installation instruction. In a communication system all DIP switch and clippable link settings are ignored. For conventional thermostats proceed with DIP switch and clippable link settings as outlined in the following*.

Heating Operation DIP Switch Settings

Switch 1 -- Thermostat Selection -- This unit may be used with either a single-stage or two-stage thermostat. The thermostat selection is made using a DIP switch which must be properly positioned for the particular application. The DIP switch is factory-positioned for use with a twostage thermostat. If a single-stage thermostat is to be used, the DIP switch must be repositioned.

- Select “OFF” for two-stage heating operation controlled by a two-stage heating thermostat (factory setting);
- Select “ON” for two-stage heating operation controlled by a single-stage heating thermostat. This setting provides a timed delay before second-stage heat is initiated.

Switch 2 -- Second Stage Delay (Used with Single-Stage Thermostat Only) -- This switch is used to determine the second stage on delay when a single-stage thermostat is being used. The switch is factory-set in the OFF position, which provides a 7-minute delay before second-stage heat is initiated. If the switch is toggled to the ON position, it will provide a 12-minute delay before second-stage heat is initiated. This switch is only activated when the thermostat selector jumper is positioned for SINGLE-stage thermostat use.

Switches 3 and 4 -- Blower-Off Delay -- The blower-on delay of 30 seconds is not adjustable. The blower-off delay (time that the blower operates after the heating demand has been satisfied) can be adjusted by moving switches 3 and 4 on the integrated control. The unit is shipped from the factory with a blower-off delay of 90 seconds. The blower off delay affects comfort and is adjustable to satisfy individual applications. Adjust the blower off delay to achieve a supply air temperature between 90° and 110°F at the exact moment that the blower is de-energized. Longer off delay settings provide lower supply air temperatures; shorter settings provide higher supply air temperatures. TABLE 13 provides the blower off timings that will result from different switch settings.

TABLE 13

Blower Off Delay Seconds	Switch 3	Switch 4
60	On	Off
90 (factory)	Off	Off
120	Off	On
180	On	On

Indoor Blower Operation DIP Switch Settings

Switches 5 and 6 -- Cooling Mode Blower Speed -- The unit is shipped from the factory with the dip switches positioned for high speed (4) indoor blower motor operation during the cooling mode. TABLE 14 provides the cooling mode blower speeds that will result from different switch settings. Switches 5 and 6 set the blower cfm for second-stage cool. The integrated control automatically ramps down to 70% of the second-stage cfm for first-stage cfm. Refer to tables for corresponding cfm values.

TABLE 14

Speed	Switch 5	Switch 6
Low	On	On
Medium Low	Off	On
Medium High	On	Off
High (factory)	Off	Off

Switches 7 and 8 -- Cooling Blower Speed Adjustment -- The unit is shipped from the factory with the dip switches positioned for NORMAL (no) adjustment. The dip switches may be positioned to adjust the blower speed by +10% or -10% to better suit the application. TABLE 15 below provides blower speed adjustments that will result from different switch settings. Refer to tables for corresponding cfm values.

TABLE 15

Adjustment	Switch 7	Switch 8
+10% (approx)	On	Off
Factory Default	Off	Off
-10% (approx)	Off	On

Switches 9 and 10 -- Cooling Mode Blower Speed Ramping -- Blower speed ramping may be used to enhance dehumidification performance. The switches are factory set at option A which has the greatest effect on dehumidification performance. TABLE 16 provides the cooling mode blower speed ramping options that will result from different switch settings. The cooling mode blower speed ramping options are detailed on the next page.

NOTE - *The off portion of the selected ramp profile also applies during heat pump operation in dual fuel applications.*

TABLE 16
Cooling Mode Blower Speed Ramping

Ramping	Switch 9	Switch 10
A (Factory)	Off	Off
B	Off	On
C	On	Off
D	On	On

Ramping Option A (Factory Selection)

- Motor runs at 50% for 30 seconds.
- Motor then runs at 82% for approximately 7-1/2 minutes.
- If demand has not been satisfied after 7-1/2 minutes, motor runs at 100% until demand is satisfied.
- Once demand is met, motor runs at 50% for 30 seconds then ramps down to stop.

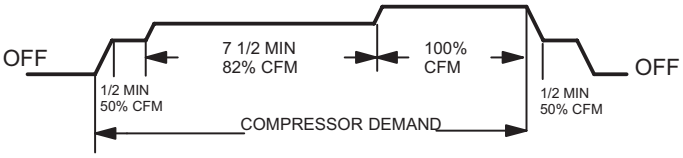

Ramping Option B

- Motor runs at 82% for approximately 7-1/2 minutes. If demand has not been satisfied after 7-1/2 minutes,motor runs at 100% until demand is satisfied.
- Once demand is met, motor ramps down to stop.

Ramping Option C

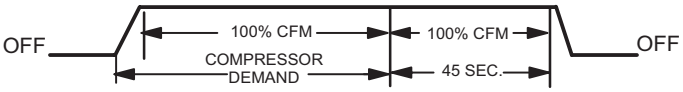

- Motor runs at 100% until demand is satisfied.
- Once demand is met, motor runs at 100% for 45 seconds then ramps down to stop.

Ramping Option D

- Motor runs at 100% until demand is satisfied.
- Once demand is met, motor ramps down to stop.

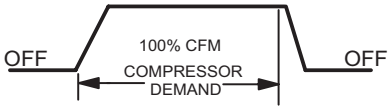

Switches 11, 12 and 13 -- Heating Mode Blower Speed
The switches are factory set to the OFF position which provides factory default heat speed. Refer to TABLE 17 for switches 11, 12 and 13 that provided the corresponding increases or decrease to both high and low heat demand.

TABLE 17
Heating Mode Blower Speeds

Heat Speed	Switch 11	Switch 12	Switch 13
Increase 24%	On	On	On
Increase 18%	On	On	Off
Increase 12%	On	Off	On
Increae 6%	On	Off	Off
Factory Default	Off	Off	Off
Decrease 6%	Off	Off	On
Decrease 12%	Off	On	Off
Decrease 18%	Off	On	On

Switches 14 and 15 -- Continuous Blower Speed
TABLE 18 provides continuous blower speed adjustments that will result from different switch settings.

TABLE 18
Continuous Blower Speed

Coninuous Blower Speed	Switch 14	Switch 15
28% of High Cool Speed	Off	On
38% of High Cool Speed (Factory)	Off	Off

NOTE - *This instruction provides indoor blower CFM tables for bottom return air only. Refer to the Product Specifications document for a complete list of CFM tables for all applications.*

Unnumbered DIP switch not used.

On-Board Links

Note: *In a communication system with a conventional outdoor unit (non-communicating), the on-board clippable links must be set to properly configure the system.*

⚠ WARNING

Carefully review all configuration information provided. Failure to properly set DIP switches, jumpers and on-board links can result in improper operation!

On-Board Link W914 Dehum or Harmony (R to DS)

On-board link W914, is a clippable connection between terminals R and DS on the integrated control. W914 must be cut when the furnace is installed with either the Harmony III zone control or a thermostat which features humidity control. If the link is left intact the PMW signal from the Harmony III control will be blocked and also lead to control damage. Refer to TABLE 19 for operation sequence in applications including SL280UHVK, a thermostat which features humidity control and a single-speed outdoor unit. TABLE 20 gives the operation sequence in applications with a two-speed outdoor unit.

On-Board Link W951 Heat Pump (R to O)

On-board link W951 is a clippable connection between terminals R and O on the integrated control. W951 must be cut when the furnace is installed in applications which include a heat pump unit and a thermostat which features dual fuel use. If the link is left intact, terminal "O" will remain energized eliminating the HEAT MODE in the heat pump.

On-Board Link W915 2 Stage Compr (Y1 to Y2)

On-board link W915 is a clippable connection between terminals Y1 and Y2 on the integrated control. W915 must be cut if two-stage cooling will be used. If the Y1 to Y2 link is not cut the outdoor unit will operate in second-stage cooling only.

Diagnostic LED (FIGURE 33)

The seven-segment diagnostic LED displays operating status, target airflow, error codes and other information. The table beginning on Page 36 lists diagnostic LED codes.

Diagnostic Push Button (FIGURE 33)

The diagnostic push button is located adjacent to the seven-segment diagnostic LED. This button is used to enable the Error Code Recall "E" mode and the Flame Signal "F" mode. Press the button and hold it to cycle through a menu of options. Every five seconds a new menu item will be displayed. When the button is released, the displayed item will be selected. Once all items in the menu have been displayed, the menu resumes from the beginning until the button is released.

Error Code Recall Mode

Select "E" from the menu to access the most recent 10 error codes. Select "c" from the Error Code Recall menu to clear all error codes. Button must be pressed a second time while "c" is flashing to confirm command to delete codes. Press the button until a solid "≡" is displayed to exit the Error Code Recall mode.

Flame Signal Mode

Select "F" from the menu to access the flame signal mode. The integrated control will display the flame current on 7 segment LED in micro amps (uA).

Flame signal mode is exited after the following:

- *Power is reset*
- *Pressing and holding push button until 3 horizontal lines "≡" are displayed*
- *10 minutes of entering the flame sense mode.*

TABLE 19
OPERATING SEQUENCE
SL280UHVK, Non-Communicating Thermostat with Humidity Control Feature and Single-Speed Outdoor Unit

OPERATING SEQUENCE		SYSTEM DEMAND				SYSTEM RESPONSE				
System Condition	Step	Thermostat Demand				Relative Humidity		Compressor	Blower CFM (cool)	Comments
		Y1	O	G	W1	Status	D			
NO CALL FOR DEHUMIDIFICATION										
Normal Operation	1	On	On	On		Acceptable	24 VAC	High	100%	Compressor and indoor blower follow thermostat demand
BASIC MODE (only active on a Y1 thermostat demand)										
Normal Operation	1	On	On	On		Acceptable	24 VAC	High	100%	CS7500 thermostat energizes Y1 and de-energizes D on a call for de-humidification
Dehumidification call	2	On	On	On		Demand	0 VAC	High	70%*	
PRECISION MODE (operates independent of a Y1 demand)										
Normal Operation	1	On	On	On		Acceptable	24 VAC	High	100%	Dehumidification mode begins when humidity is greater than set point
Dehumidification Call	2	On	On	On		Demand	0 VAC	High	70%*	
Dehumidification Call Only	1	On	On	On		Demand	0 VAC	High	70%*	CS7500 thermostat will try to maintain room humidity setpoint by allowing the room space to maintain a cooler room thermostat setpoint**
	Jumpers at indoor unit with a single stage outdoor unit. With Condensing unit - Cut W914 (R to DS) on SureLight® control With Heat Pump - Cut W914 (R to DS) & W951 (R to O) on SureLight® control									

CS7500 thermostat to use for this application - Y2081 4 heat / 2 cool

**Dehumidification blower speed is 70% of COOL speed for all units .*

***In Precision mode, CS7000 thermostat will maintain room temperature up to 2 °F (1.2°C) cooler than room setting.*

TABLE 20
OPERATING SEQUENCE
SL280UHVK, Non-Communicating Thermostat with Humidity Control Feature and Two-Speed Outdoor Unit

OPERATING SEQUENCE		SYSTEM DEMAND						SYSTEM RESPONSE				
System Condition	Step	Thermostat Demand						Relative Humidity		Compressor	Blower CFM (cool)	Comments
		Y1	Y2	O	G	W1	W2	Status	D			
NO CALL FOR DEHUMIDIFICATION												
Normal Operation Y1	1	On		On	On			Acceptable	24 VAC	Low	70%*	Compressor and indoor blower follow thermostat demand
Normal Operation Y2	2	On	On	On	On			Acceptable	24 VAC	High	100%	
ROOM THERMOSTAT CALLS FOR FIRST STAGE COOLING												
BASIC MODE (only active on a Y1 thermostat demand)												
Normal Operation	1	On		On	On			Acceptable	24 VAC	Low	70%*	CS7500 thermostat energizes Y1 and de-energizes D on a call for de-humidification
Dehumidification call	2	On	On	On	On			Demand	0 VAC	High	70%**	
PRECISION MODE (operates independent of a Y1 demand)												
Normal Operation	1	On		On	On			Acceptable	24 VAC	Low	70%*	Dehumidification mode begins when humidity is greater than set point
Dehumidification Call	2	On	On	On	On			Demand	0 VAC	High	70%**	
Dehumidification Call Only	1	On	On	On	On			Demand	0 VAC	High	70%**	CS7500 thermostat will try to maintain room humidity setpoint by allowing the room space to maintain a cooler room thermostat setpoint**
ROOM THERMOSTAT CALLS FOR FIRST AND SECOND STAGE COOLING												
BASIC MODE (only active on a Y1 thermostat demand)												
Normal Operation	1	On	On	On	On			Acceptable	24 VAC	High	100%	CS7500 thermostat energizes Y2 and de-energizes D on a call for de-humidification
Dehumidification Call	2	On	On	On	On			Demand	0 VAC	High	70%**	
PRECISION MODE (operates independent of a Y1 thermostat demand)												
Normal Operation	1	On		On	On			Acceptable	24 VAC	Low	70%*	Dehumidification mode begins when humidity is greater than set point
Dehumidification Call	2	On	On	On	On			Demand	0 VAC	High	70%**	
Dehumidification Call ONLY	1	On	On	On	On			Demand	0 VAC	High	70%**	CS7500 thermostat will try to maintain room humidity setpoint by allowing the room space to maintain a cooler room thermostat setpoint***
	Jumpers at indoor unit with a two stage outdoor unit Cut factory jumper from Y1 to Y2 or cut W915 (Y1 to Y2) With Condensing unit - Cut W914 (R to DS) on SureLight® control With Heat Pump - Cut W914 (R to DS) & W951 (R to O) on SureLight® control											

CS7500 thermostat to use for this application - Y2081 4 heat / 2 cool

**Normal operation first stage cooling blower speed is 70% COOL speed.*

***Dehumidification blower speed is, reduced to 70% of COOL.*

****In Precision mode, CS7000 thermostat will maintain room temperature up to 2 °F (1.2°C) cooler than room setting.*

Low GWP Application

⚠ WARNING

For use with Lennox approved evaporator coil and LGWP sensors only. Use original manufacturer recommended LGWP sensors if using non Lennox approved evaporator coil.

CONNECTING THE FURNACE CONTROL BOARD SENSOR.

See FIGURE 37 and follow steps below:

1 - Route sensor wire #1 through provided grommet. Form a drip loop below the control board on upflow installations to prevent condensate dripping on the control board.

2 - Avoid sharp edges when routing sensor wire during installation.

3 - Sensor wire must not block view of 7 segment LED .

Ensure the cable is properly seated into the SENSOR 1 plug (LGWP1). The Molex plug clip should lock into the Molex connection point for a secured connection, as shown below in FIGURE 35. Verify the connection is free of dust, debris, and moisture.

NOTE - *In confined space applications, connect the second sensor to the SENSOR 2 plug (LGWP2). Refer to evaporator coil installation instructions for more detail.*

Two Stage Variable Speed Control

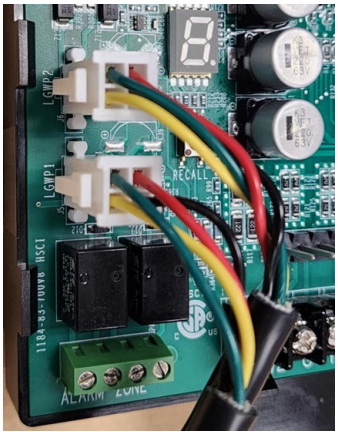

FIGURE 35

LOW GWP DIP SWITCH SETTINGS

Adjust the DIP switch settings to the sensor configuration. Failure to do so will cause faults on power-up. See FIGURE 36 and TABLE 21.

FIGURE 36

TABLE 21

DIP Switch Settings

Configuration	Switch 1	Switch 2
One (1) sensor, connected to SENSOR 1 plug	OFF (enable)	ON (disable)
Two (2) sensors, connected to SENSOR 1 plug and SENSOR 2 plug	OFF (enable)	OFF (enable)

In single sensor configurations, the sensor must be connected to the SENSOR 1 plug (LGWP1). Configurations other than the ones shown in TABLE 21 will cause a servicing fault.

Each DIP switch corresponds to a sensor position (i.e., DIP switch 1 to sensor 1; DIP switch 2 to sensor 2). The default factory switch positions are set to OFF (ENABLED)

The furnace control board software reads the OFF position as an active sensor. A sensor should be present for the corresponding sensor connector. Setting the DIP switch to ON disables the sensor position.

SECONDARY SENSOR REQUIREMENTS

Additional Line Sets

If additional refrigerant line joints are present outside of the line set sleeve and a secondary refrigerant detection sensor is required, its installation must comply with the requirements listed in Refrigerant Detection Sensor Kit (27V53). See FIGURE 37 for routing the secondary sensor cable through the furnace cabinet.

Non-Low GWP Applications

⚠ WARNING

For Furnace only applications or Furnace replacement in a Non-Low GWP applications, the LOW GWP sensors should be disabled, otherwise the blower will operate continuously. To do this, the Low GWP Dip switches setting for both – Sensor 1 and the Sensor 2 must be moved to the ON position.

FURNACE CONTROL BOARD LOW GWP MODES OF OPERATION

The modes of operation for the furnace control board are Initializing, Normal, Leak Detected, and Fault.

Initializing

The furnace control board is establishing connection with the refrigerant detection sensor and is completing an initial five-minute purge sequence.

Normal

The HVAC system is functioning normally. The furnace control board has not detected a refrigerant leak.

Leak Detected

When the furnace control board detects a refrigerant leak:

1. The furnace control board shuts off the (R) input (24VAC power) to the thermostat, which de-energizes the outdoor unit compressor and heat sources, such as gas and/or electric strip heat. No heating or cooling demands will be me
2. The furnace control board activates the blower (high speed). The blower purges refrigerant from the cabinet, plenum, and ductwork.
3. After the furnace control board determines the refrigerant levels are below the safety threshold, the blower will continue to operate for the remainder of the seven (7) -minute cycle.
4. After the blower sequence is complete, the HVAC system resumes normal operation.

NOTE - *The HVAC system may not maintain a cooling or heating setpoint if a significant leak exists. Any refrigerant leaks that remain unaddressed for an extended time may cause the HVAC system to shut down on a low refrigerant pressure limit condition.*

Fault

When a Low GWP fault is detected by the furnace control board, the indoor unit blower engages and remains engaged at a constant air flow output until the fault is cleared.

NOTE - *See "Ignition Control Diagnostic Codes (continued)" on page 37 for Low GWP diagnostic error codes.*

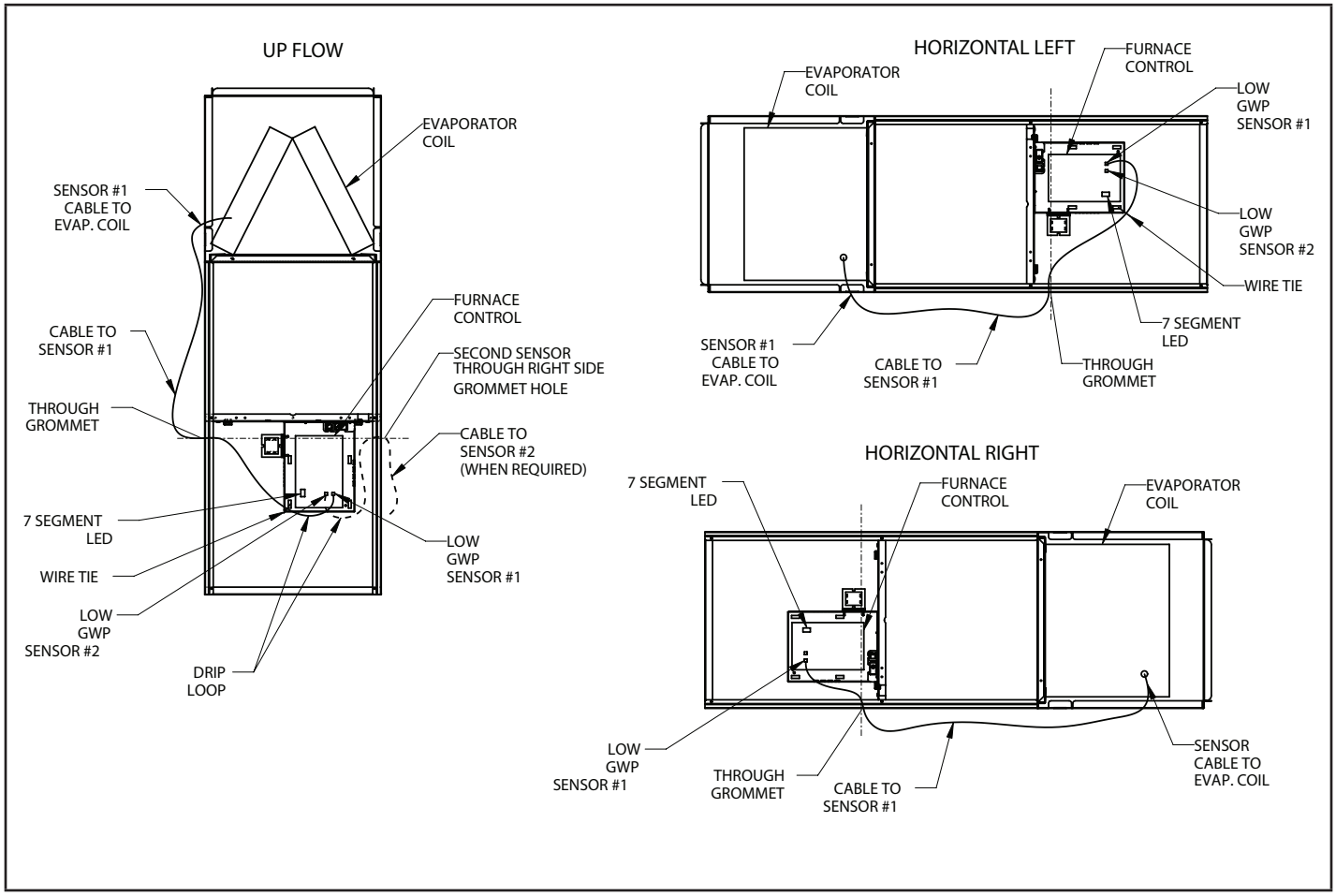

FIGURE 37

LGWP TEST BUTTON FUNCTIONALITY

The furnace control board is equipped with a Test/Reset push button. The Test button can be used to perform several functions, depending on the mode of operation of the furnace control board.

TABLE 22 lists the functions of the Test button during each mode of operation.

TABLE 22

LGWP Test Button Function

Mode of Operation	Press the Test Button to:
Normal	Trigger a leak detection response. Verify all equipment is wired correctly into the furnace blower control board (after installation).
Leak Detected	Reset the furnace control board to a normal mode of operation after a previous leak has been detected and purged from the HVAC system
Fault	Reset the furnace control board after troubleshooting and resolving a fault condition. If the fault is not resolved, the furnace control board will enter the Fault mode again.

LGWP Test Button - Additional Functions

TABLE 23 lists the additional functions of the Test Button while the furnace control board is functioning within the states of Initializing, Monitoring, Leak Detection, Servicing and Fault.

TABLE 23

Additional Button Functions

State	Press	Action
Initializing	Short	Skips remaining pre-purge after sensors are recognized by the furnace control board
Initializing	Long	Reset control
Monitoring	Short	Clear purge-counter if prior mitigation has occurred; Test mitigation
Monitoring	Long	Reset control
Mitigating	Short	If testing mitigation, end test
Servicing	Short	Reevaluate fault condition - if cleared return to monitoring, otherwise update indicator
Servicing	Long	Reset control
Fault	Short	Reevaluate fault condition - if cleared return to monitoring, otherwise update indicator
Fault	Long	Reset control

External Alarm

(*For applications with external alarms wired directly to the furnace control board*)

The furnace control board triggers the external alarm system when it enters Leak Detected mode. For alarm notifications, the furnace control board provides a dry relay contact that is rated 3A at 30 VAC/DC.

THERMOSTAT COMPATIBILITY

Thermostats that preserve memory settings are compatible with the furnace control board. Examples include:

- Battery-powered thermostats
- Analog Thermostat
- Late-model programmable thermostats

NOTE - *Early-generation digital and programmable thermostats may not retain the operation mode and temperature setpoints after a power outage.*

The following scenarios are likely to occur when home occupants are not available to adjust the thermostat setpoints as the system is recovering from leak detection and resuming normal operation:

- Heating could be lost during a cold night
- Cooling could be lost during a hot day
- The thermostat could reset to an incorrect temperature setpoint

START UP PROCEDURE

The furnace control board is equipped with a LGWP Test/Reset button, see Test Button Functionality. After the furnace control board has been mounted and wired, restore power to the HVAC system. The system will then run through a purge sequence for five minutes. After the purge sequence is complete, proceed to testing cooling demand and heating demand.

Cooling Demand

1. Prompt a cooling demand at the thermostat.
2. Press the LGWP Test button on the furnace control board.

   The system then executes a leak detection response.
3. Observe the following sequence:
   a. The LED indicator for leak detection. *See "Ignition Control Diagnostic Codes (continued)" on page 37 for Low GWP diagnostic error codes.*
   b. The blower powers up.
   c. The outdoor compressor powers down.
4. Press the LGWP Test button to terminate the simulated Leak Detected mode upon test completion
5. ***Heating Demand***

1. Prompt a heating demand at the thermostat.
2. Observe the following sequence:
   a. The LED indicator for leak detection. *See "Ignition Control Diagnostic Codes (continued)" on page 37 for Low GWP diagnostic error codes..*
   b. The blower powers up.
   c. The gas burners power down.
   d. The outdoor compressor powers down.
3. Press the LGWP Test button to terminate the simulated Leak Detected mode upon test completion.

The installation of the furnace control board is complete after both sequences are successfully completed.

Unit Start-Up

FOR YOUR SAFETY READ BEFORE LIGHTING

⚠ WARNING

Do not use this furnace if any part has been underwater. A flood-damaged furnace is extremely dangerous. Attempts to use the furnace can result in fire or explosion. Immediately call a qualified service technician to inspect the furnace and to replace all gas controls, control system parts, and electrical parts that have been wet or to replace the furnace, if deemed necessary.

⚠ WARNING

If overheating occurs or if gas supply fails to shut off, shut off the manual gas valve to the appliance before shutting off electrical supply.

⚠ CAUTION

Before attempting to perform any service or maintenance, turn the electrical power to unit OFF at disconnect switch.

BEFORE LIGHTING smell all around the appliance area for gas. Be sure to smell next to the floor because some gas is heavier than air and will settle on the floor.

The gas valve on the EL280UHEK unit will be equipped with a gas control switch. Use only your hand to move the switch. Never use tools. If the switch will not turn or if the control switch will not move by hand, do not try to repair it.

Placing the furnace into operation:

EL280UHEK units are equipped with an automatic ignition system. Do not attempt to manually light burners on these furnaces. Each time the thermostat calls for heat, the burners will automatically light. The ignitor does not get hot when there is no call for heat on units with an automatic ignition system.

⚠ WARNING

If you do not follow these instructions exactly, a fire or explosion may result causing property damage, personal injury or death.

Gas Valve Operation (FIGURE 38)

1 - **STOP!** Read the safety information at the beginning of this section.

2 - Set the thermostat to the lowest setting.

3 - Turn off all electrical power to the unit.

4 - This furnace is equipped with an ignition device which automatically lights the burners. Do not try to light the burners by hand.

5 - Remove the upper access panel.

6 - Move switch on gas valve to OFF. Do not force. See FIGURE 38.

7 - Wait five minutes to clear out any gas. If you then smell gas, STOP! Immediately call your gas supplier from a neighbor's phone. Follow the gas supplier's instructions.

8 - Move switch on gas valve to ON. Do not force. See FIGURE 38.

9 - Replace the upper access panel.

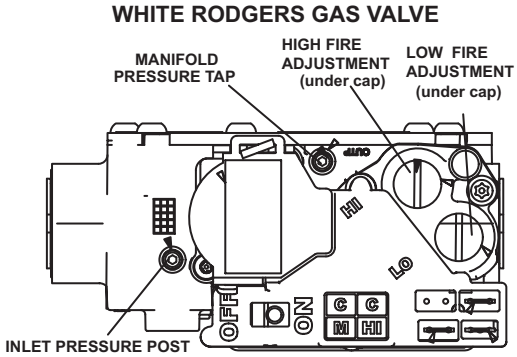

GAS VALVE SHOWN IN ON POSITION

FIGURE 38

10- Turn on all electrical power to to the unit.

11- Set the thermostat to desired setting.

NOTE - *When unit is initially started, steps 1 through 11 may need to be repeated to purge air from gas line.*

12- If the appliance will not operate, follow the instructions "Turning Off Gas to Unit" and call your service technician or gas supplier.

Turning Off Gas to Unit

1 - Set the thermostat to the lowest setting.

2 - Turn off all electrical power to the unit if service is to be performed.

3 - Remove the upper access panel.

4 - Move switch on gas valve to OFF. Do not force.

5 - Replace the upper access panel.

Failure To Operate

If the unit fails to operate, check the following:

1 - Is the thermostat calling for heat?

2 - Are access panels securely in place?

3 - Is the main disconnect switch closed?

4 - Is there a blown fuse or tripped circuit breaker?

5 - Is the filter dirty or plugged? Dirty or plugged filters will cause the limit control to shut the unit off.

6 - Is gas turned on at the meter?

7 - Is the manual main shut-off valve open?

8 - Is the gas valve ON/OFF switch in the ON position?

9 - Is the unit ignition system in lock out? If the unit locks out again, call the service technician to inspect the unit for blockages.

10 - Is pressure switch closed? Obstructed flue will cause unit to shut off at pressure switch. Check flue and outlet for blockages.

11 - Are flame rollout switches tripped? If flame rollout switches are tripped, call the service technician for inspection.

Gas Pressure Adjustment

Gas Flow (Approximate)

TABLE 24

GAS METERING CLOCKING CHART				
Unit	Natural 1000 btu/cu ft		LP 2500 btu cu/cu ft	
	Seconds For One Revolution			
	1 cu ft dial	2 cu fr dial	1 cu ft Dial	2 cu ft Dial
-045	80	160	200	400
-070	55	110	136	272
-090	41	82	102	204
-110	33	66	82	164
-135	27	54	68	136

Furnace should operate at least 5 minutes before checking gas flow. Determine time in seconds for two revolutions of gas through the meter. (Two revolutions assures a more accurate time.) Divide by two and compare to time in TABLE 24. If manifold pressure matches TABLE 28 and rate is incorrect, check gas orifices for proper size and restriction. Remove temporary gas meter if installed.

NOTE - *To obtain accurate reading, shut off all other gas appliances connected to meter.*

Supply Pressure Measurement

An inlet post located on the gas valve provides access to the supply pressure. See FIGURE 38. Back out the 3/32” hex screw one turn, connect a piece of 5/16” tubing and connect to a manometer to measure supply pressure. See TABLE 28 for supply line pressure.

Manifold Pressure

A manifold pressure tap located on the gas valve provides access to the manifold pressure. See FIGURE 38. Back out the 3/32 hex screw one turn, connect a piece of 5/16” tubing and connect to a manometer to measure manifold pressure.

NOTE - *Pressure test adapter kit (10L34) is available from Lennox to facilitate manifold pressure measurement.*

1 - Connect test gauge to manifold pressure tap on gas valve.

2 - Ignite unit on **low fire** and let run for 5 minutes to allow for steady state conditions.

3 - After allowing unit to stabilize for 5 minutes, record manifold pressure and compare to value given in TABLE 28.

4 - If necessary, make adjustments. FIGURE 38 shows location of high fire and low fire adjustment screw.

5 - Repeat steps 2, 3 and 4 on high fire.

6 - Shut unit off and remove manometer as soon as an accurate reading has been obtained. Turn the supply and manifold 3/32” hex screw one revolution back into the gas valve.

7 - Start unit and check for gas leaks. Seal if any found

⚠ IMPORTANT

For safety, shut unit off and remove manometer as soon as an accurate reading has been obtained. Take care to replace pressure tap plug.

.

High Altitude

The manifold pressure, gas orifice and pressure switch may require adjustment or replacement to ensure proper operation at higher altitudes. TABLE 26, TABLE 27 and TABLE 28 show manifold pressure, pressures switch and gas conversion kits at all altitudes

Proper Combustion

Furnace should operate minimum 15 minutes with correct manifold pressure and gas flow rate before checking combustion. TABLE 25 shows acceptable combustion for ALL EL280UHEK models. **The maximum carbon monoxide reading should not exceed 100 ppm**

TABLE 25

Firing Rate	CO_2% For Nat	CO_2% For LP
High Fire	6.8 - 7.4	7.5 - 9.0
Low Fire	4.2 - 5.7	5.0 - 6.0

TABLE 26

Gas Valve Conversion Kits

Unit Input	High Altitude Natural Gas Orifice Kit	Natural Gas to LP/ Propane Kit		LP/ Propane to Natural Gas Kit
	7501 - 10,000 ft	0 - 7500 ft	7501 - 10,000 ft	0 - 7500 ft
070	73W37	11K51	11K46	77W09
090				
110				
135				

TABLE 27

Unit Input	**High Altitude Pressure Switch Kit**		
	0 - 4500 ft.	4501 - 7500 ft.	7501 - 10,000 ft.
070	No Change	No Change	73W35
090	No Change	69W56	73W35
110	No Change	69W56	73W35
135	No Change	73W33	73W34

TABLE 28

Manifold Pressure Settings

Unit Input	Gas	Orifice Size 0 - 7500 ft.	Orifice Size 0 - 7500 ft[1]	Manifold Pressure in. wg. 0 - 4500 ft		Manifold Pressure in. wg. 4500 - 7500 ft		Manifold Pressure in. wg. 7500 - 10,000 ft[2]		Supply Line Pressure in. w.g.	
				Low Firer	High Fire	Low Fire	High Fire	Low Fire	High Fire	Min	Max
070	Natural	.063	.055.	1.7	3.5	1.6	3.4	1.7	3.5	4.5	13.0
	LP/propane [3]	.034	.032	4.5	10.0	4.5	10.0	4.5	10.5	11.0	13.0
090	Natuarl	.063	.055	1.7	3.5	1.5	3.2	1.7	3.5	4.5	13.0
	LP/propane [3]	.034	.032	4.5	10.0	4.5	10.0	4.5	10.0	11.0	13.0
110	Natural	.063	.055	1.7	3.5	1.5	3.2	1.7	3.5	4.5	13.0
	LP/propane [3]	.034	.032	4.5	10.0	4.5	10.0	4.5	10.0	11.0	13.0
135	Natuarl	.063	.055	1.7	3.5	1.6	2.8	1.7	3.5	4.5	13.0
	LP/propane [3]	.034	.032	4.5	10.0	4.5	10.0	4.5	10.0	11.0	

[1] This is the only permissible derate for these units.

[2] Natural gas high altitude orifice kit required.

[3] A natural to L.P. propane gas changeover kit is necessary to convert this unit. Refer to the changeover kit installation instruction for the conversion procedure.

NOTE - Units may be installed at altitudes up to 4500 ft. above sea level without modifications.

Other Unit Adjustments

Primary and Secondary Limits

The primary limit is located on the heating compartment vestibule panel. The secondary limits (if equipped) are located in the blower compartment, attached to the back side of the blower. These auto reset limits are factory-set and require no adjustment.

Flame Rollout Switches

This manually reset switches are located on the baffle plate in the burner assembly.

Pressure Switch

The pressure switch is located in the heating compartment adjacent to the combustion air inducer. The switch checks for proper combustion air inducer operation before allowing ignition trial. The switch is factory-set and requires no adjustment.

Temperature Rise

After the furnace has been started, and supply and return air temperatures have been allowed to stabilize, check the temperature rise. If necessary, adjust the blower speed to maintain the temperature rise within the range shown on the unit nameplate. See TABLE 29 for allowable heating speeds.Increase the blower speed to decrease the temperature. Decrease the blower speed to increase the temperature rise. Failure to adjust the temperature rise may cause erratic limit operation.

Electrical

1 - Check all wiring for loose connections.

2 - Check for the correct voltage at the furnace (furnace operating). Correct voltage is 120VAC + 10%.

3 - Check amp-draw on the blower motor with inner blower panel in place.

Unit Nameplate_____Actual_____

Blower Speeds

Follow the steps below to change the blower speeds.

1 - Turn off electrical power to furnace.

2 - Remove blower access panel.

3 - Disconnect existing speed tap at integrated control speed terminal.

NOTE - *Termination of any unused motor leads must be insulated.*

4 - Place unused blower speed tap on integrated control “PARK” terminal or insulate.

5 - Refer to blower speed selection chart on unit wiring diagram for desired heating or cooling speed. See Blower performance data at the end of this manual and TABLE 29 for allowable heating speeds.

6 - Connect selected speed tap at integrated control speed terminal.

7 - Resecure blower access panel.

8 - Turn on electrical power to furnace.

9 - Recheck temperature rise.

Heating Sequence of Operation

Applications Using a Two-Stage Thermostat See FIGURE 39 for ignition control sequence

A - Heating Sequence Integrated Control Thermostat Selection DIP Switch 1 OFF in “Two-Stage”Position (Factory Setting)

1 - On a call for heat, thermostat first-stage contacts close sending a signal to the integrated control. The integrated control runs a self-diagnostic program and checks high temperature limit switches for normally closed contacts and pressure switches for normally open contacts. The combustion air inducer is energized at low speed.

2 - Once the control receives a signal that the low pressure switch has closed, the combustion air inducer begins a 15-second pre-purge in low speed.

NOTE - If the low fire pressure switch does not close the combustion air inducer will switch to high fire. After a 15 second pre-purge the high fire pressure switch will close and the unit will begin operation on high fire. After 10 to 20 seconds of high fire operation the unit will switch to low fire.

3 - After the pre-purge is complete, a 20-second initial ignitor warm-up period begins. The combustion air inducer continues to operate at low speed.

4 - After the 20-second warm-up period has ended, the gas valve is energized on low fire (first stage) and ignition occurs. At the same time, the control module sends a signal to begin an indoor blower 30-second ON-delay. When the delay ends, the indoor blower motor is energized on the low fire heating speed, the HUM contacts close energizing the humidifier and 120V ACC terminal is energized. The furnace will continue this operation as long as the thermostat has a first-stage heating demand.

5 - If second-stage heat is required, the thermostat second- stage heat contacts close and send a signal to the integrated control. The integrated control initiates a 30-second second-stage recognition delay.

6 - At the end of the recognition delay, the integrated control energizes the combustion air inducer at high speed. The control also checks the high fire (second stage) pressure switch to make sure it is closed. The high fire (second stage) gas valve is energized and the indoor blower motor is energized for operation at the high fire heating speed.

7 - When the demand for high fire (second stage) heat is satisfied, the combustion air inducer is switched to the low-fire heating speed and the high-fire (second stage) gas valve is de-energized. The low-fire (first stage) gas valve continues operation. The indoor blower motor is switched to the low-fire heating speed.

8 - When the thermostat demand for low-fire (first stage) heat is satisfied, the gas valve is de-energized and the field-selected indoor blower off delay begins. The combustion air inducer begins a 5-second post-purge period.

9 - When the combustion air post-purge period is complete, the inducer, the HUM contacts as well as the 120V ACC.

Applications Using A Single-Stage Thermostat See FIGURE 40 for ignition control sequence

B - Heating Sequence -- Integrated Control Thermostat Selection DIP Switch 1 ON in "Single-Stage" Position

NOTE - *In these applications, two-stage heat will be initiated by the integrated control if heating demand has not been satisfied after the field adjustable period (7 or 12 minutes).*

1 - On a call for heat, thermostat first-stage contacts close sending a signal to the integrated control. The integrated control runs a self-diagnostic program and checks high temperature limit switches for normally closed contacts and pressure switches for normally open contacts. The combustion air inducer is energized at low speed.

2 - Once the control receives a signal that the low pressure switch has closed, the combustion air inducer begins a 15-second pre-purge in low speed

N*OTE - If the low fire pressure switch does not close the combustion air inducer will switch to high fire. After a 15 second pre-purge the high fire pressure switch will close and the unit will begin operation on high fire. After 10 to 20 seconds of high fire operation the unit will switch to low fire*.

3 - After the pre-purge is complete, a 20-second initial ignitor warm-up period begins. The combustion air inducer continues to operate at low speed

4 - After the 20-second warm-up period has ended, the gas valve is energized on low fire (first stage) and ignition occurs. At the same time, the control module sends a signal to begin an indoor blower 30-second ON-delay. When the delay ends, the indoor blower motor is energized on the low fire heating speed and the HUM contacts are energized. The integrated control also initiates a second-stage on delay (factory-set at 7 minutes; adjustable to 12 minutes).

5 - If the heating demand continues beyond the secondstage on delay, the integrated control energizes the combustion air inducer at high speed. The control also checks the high fire (second stage) pressure switch to make sure it is closed. The high fire (second stage) gas valve is energized and the indoor blower motor is energized for operation at the high fire heating speed.

6 - When the thermostat heating demand is satisfied, the combustion air inducer begins a 5-second low speed post-purge. The field-selected indoor blower off delay begins. The indoor blower operates at the low-fire heating speed.

7 - When the combustion air post-purge period is complete, the inducer, the HUM contacts as well as the 120V ACC terminals are de-energized. The indoor blower is de-energized at the end of the off delay

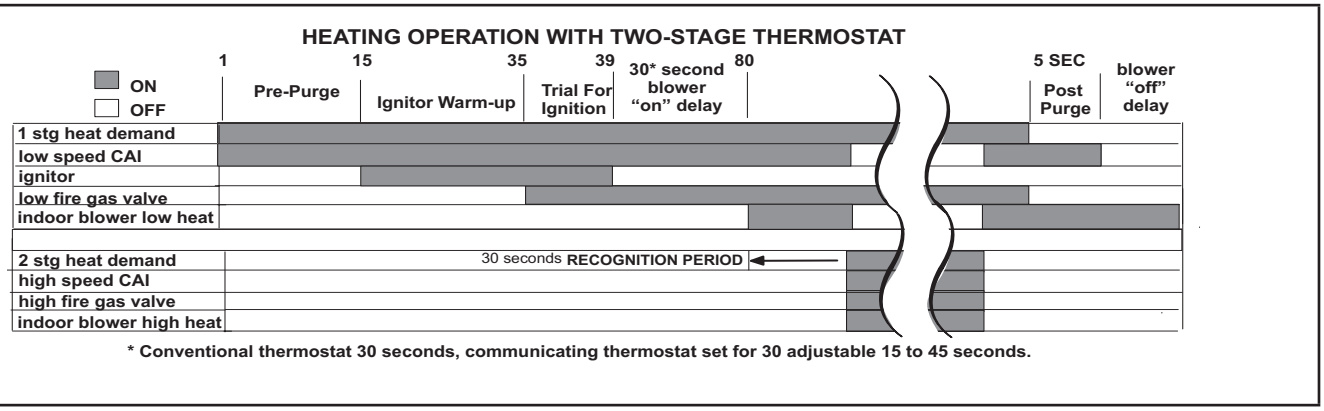

FIGURE 39

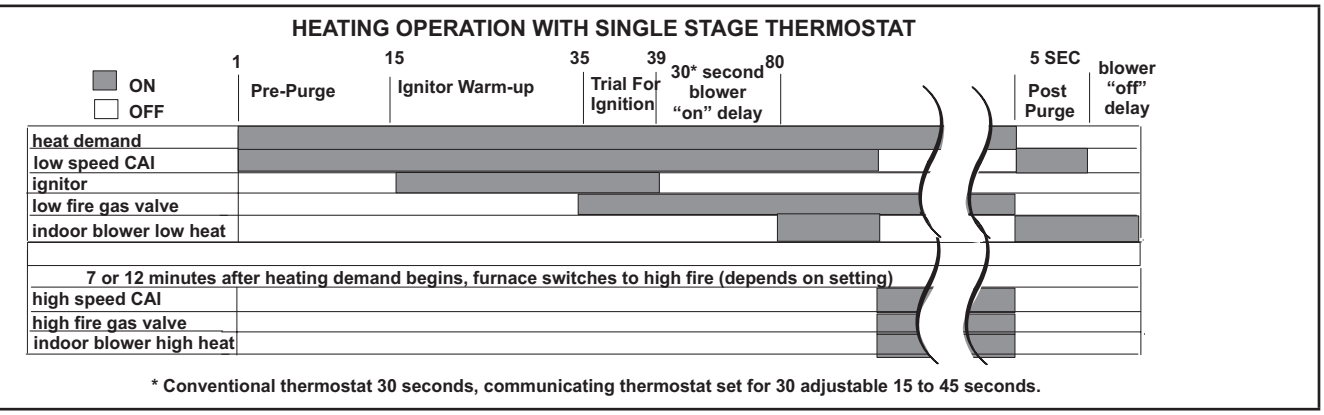

FIGURE 40

⚠ WARNING

ELECTRICAL SHOCK, FIRE, OR EXPLOSION HAZARD.

Failure to follow safety warnings exactly could result in dangerous operation, serious injury, death or property damage.

Improper servicing could result in dangerous operation, serious injury, death, or property damage. Before servicing, disconnect all electrical power to furnace.

When servicing controls, label all wires prior to disconnecting. Take care to reconnect wires correctly.

Verify proper operation after servicing.

⚠ WARNING

The blower access panel must be securely in place when the blower and burners are operating. Gas fumes, which could contain carbon monoxide, can be drawn into living space resulting in personal injury or death.

Annual Furnace Maintenance

At the beginning of each heating season, and to comply with the Lennox Limited Warranty, your system should be checked as follows:

1 - Check wiring for loose connections, voltage at indoor unit and amperage of indoor motor.

2- Check the condition of the belt and shaft bearings if applicable.

3- Inspect all gas pipe and connections for leaks.

4- Check the cleanliness of filters and change if necessary (monthly).

5- Check the condition and cleanliness of burners and heat exchanger and clean if necessary.

6- Check the cleanliness of blower assembly and clean the housing, blower wheel and blower motor if necessary.

7- Inspect the combustion air inducer and clean if necessary.

8- Evaluate the heat exchanger integrity by inspecting the heat exchanger per the AHRI heat exchanger inspection procedure. This procedure can be viewed at www.ahrinet.org.

9- Ensure sufficient combustion air is available to the furnace. Fresh air grilles and louvers (on the unit and in the room where the furnace is installed) must be properly sized, open and unobstructed to provide combustion air.

10- Inspect the furnace venting system to make sure it is in place, structurally sound, and without holes, corrosion, or blockage. Vent system must be free and clear of obstructions and must slope upward away from the furnace . Vent system should be installed per the National Fuel Gas Code.

11- Inspect the furnace return air duct connection to ensure the duct is sealed to the furnace. Check for air leaks on supply and return ducts and seal where necessary.

12- Check the condition of the furnace cabinet insulation and repair if necessary.

13- Perform a complete combustion analysis during the furnace inspection to ensure proper combustion and operation. Consult Service Literature for proper combustion values.

14- Verify operation of CO detectors and replace batteries as required.

15 - Inspect the Low GWP sensor(s) and rubber sleeve.

Perform a general system test. Turn on the furnace to check operating functions such as the start-up and shut-off operation.

1 - Check the operation of the ignition system, inspect and clean flame sensor. Check microamps before and after. Check controls and safety devices (gas valve, flame sensor, temperature limits). Consult Service Manual for proper operating range. Thermal Limits should be checked by restricting airflow and not disconnecting the indoor blower. For additional details, please see Service and Application Note H049.

2 - Verify that system total static pressure and airflow settings are within specific operating parameters.

3 - Clock gas meter to ensure that the unit is operating at the specified firing rate. Check the supply pressure and the manifold pressure. On two-stage gas furnaces check the manifold pressure on high fire and low fire. If manifold pressure adjustment is necessary, consult the Service Literature for unit specific information on adjusting gas pressure. Not all gas valves are adjustable. Verify correct temperature rise.

Cleaning the Burners

NOTE - Use papers or protective covering in front of the furnace during cleaning.

1 - Turn off both electrical and gas power supplies to furnace.

2 - Label the wires from gas valve, rollout switches, primary limit switch and make-up box then disconnect them.

3 - Disconnect gas supply piping. Remove the screw securing the burner box cover and remove cover. Remove the four screws securing the burner manifold assembly to the vestibule panel and remove theassembly from the unit.

4 - To clean burners, run a vacuum cleaner with a soft brush attachment over the face of burners. Visually inspect inside the burners and crossovers for any blockage caused by foreign matter. Remove any blockage. shows burner detail.

5 - Reinstall burner box, manifold assembly and burner box cover.

6 - Re-install gas supply and turn on electrical pwer to furnace.

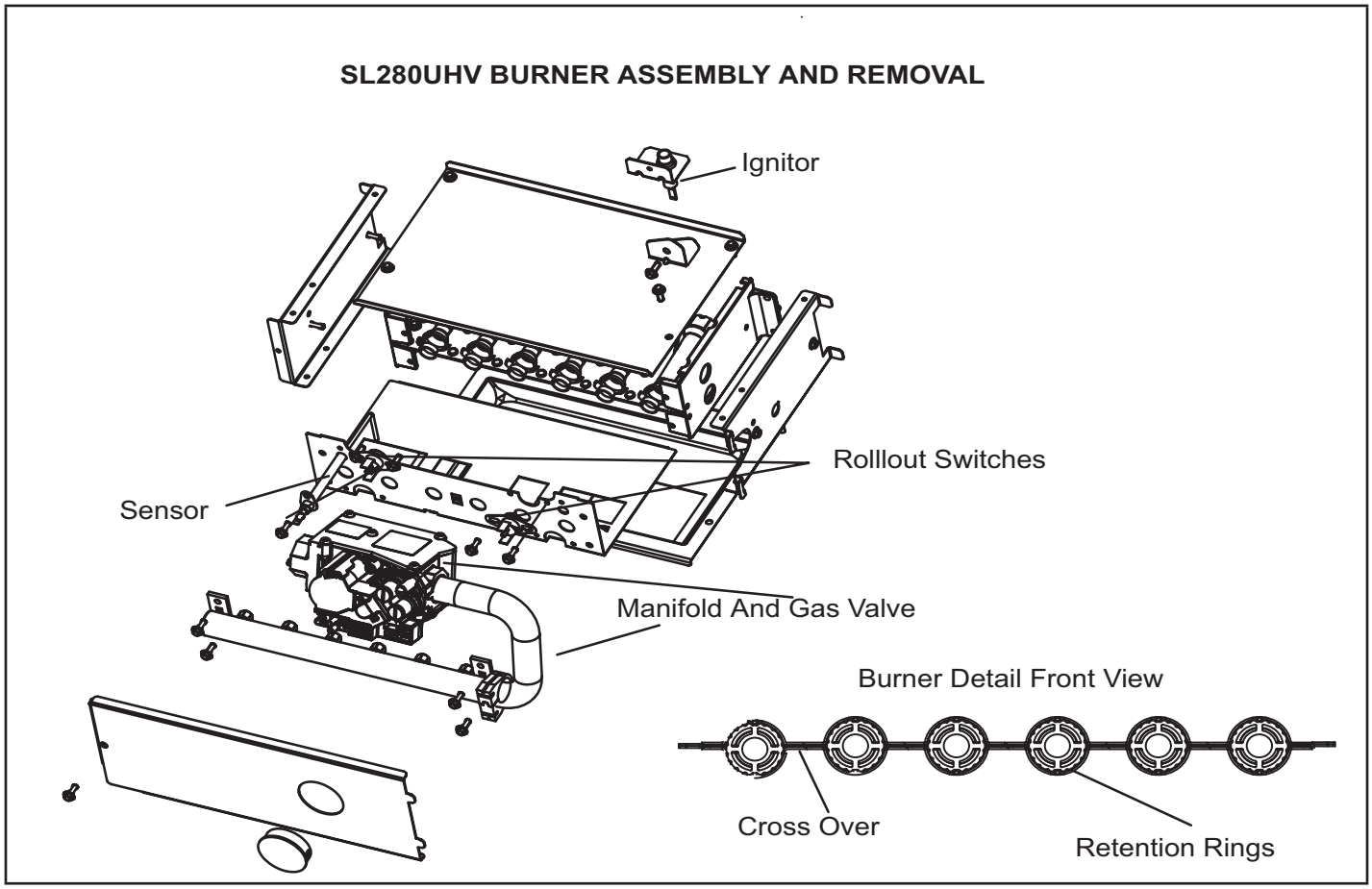

FIGURE 41

Repair Parts

The following repair parts are available through independent Lennox dealers. When ordering parts, include the complete

furnace model number listed on the CSA International nameplate -- Example: SL280UH070V36AK. **All service must be performed by a licensed professional installer (or equivalent), service agency, or gas supplier**

Cabinet Parts

- Upper access panel
- Blower panel
- Top cap

Control Panel Parts

- Transformer
- Two-stage, variable speed integrated control
- Door interlock switch
- Circuit breaker

Blower Parts

- Blower wheel
- Blower housing
- Motor
- Motor electronics
- Power choke (1 hp only)
- Motor mounting frame
- Motor capacitor
- Blower housing cutoff plate

Heating Parts

- Flame Sensor
- Heat exchanger assembly
- Gas manifold
- Two-speed combustion air inducer
- Two-stage gas valve
- Main burner cluster
- Main burner orifices
- Pressure switch
- Ignitor
- Primary limit control
- Flame rollout switch
- Secondary limit

Refrigerant Detection System Parts

- Refrigerant Detection Sensor
- Refrigerant Line Set Sleeve

TABLE 29

<table>
<tr><th colspan="9">Allowable Heating Speeds</th></tr>
<tr><th>SL280UH Model</th><th>-18%</th><th>-12%</th><th>-6%</th><th>Default</th><th>+6%</th><th>+12%</th><th>+18%</th><th>+24%</th></tr>
<tr><td>070V36AK</td><td rowspan="6">Allowed</td><td rowspan="6">Allowed</td><td rowspan="6">Allowed</td><td rowspan="6">Factory Setting</td><td rowspan="6">Allowed</td><td rowspan="6">Allowed</td><td>Allowed</td><td>Allowed</td></tr>
<tr><td>090V36BK</td><td>Not Allowed</td><td>Not Allowed</td></tr>
<tr><td>090V48BK</td><td rowspan="4">Allowed</td><td rowspan="2">Allowed</td></tr>
<tr><td>090V60CK</td></tr>
<tr><td>110V60CK</td><td rowspan="2">Not Allowed</td></tr>
<tr><td>135V60DK</td></tr>
</table>

TABLE 30

Allowable Circulation Speeds		
Model Number	28% (second stage cool)	38% (second stage cool)
All Models	Allowed	Factory Setting

BLOWER DATA

SL280UH070V36AK BLOWER PERFORMANCE (less filter)
BOTTOM RETURN AIR
0 through 0.8 in. w.g. (Heating) and 0 through 1.0 in. w.g. (Cooling) External Static Pressure Range

HEATING		
[1] Heating Speed DIP Switch Settings	First Stage Heating Speed - cfm	Second Stage Heating Speed - cfm
+24%	1045	1145
+18%	985	1080
+12%	940	1035
+6%	880	960
Factory Default	850	925
–6%	785	875
–12%	745	815
–18%	680	745

COOLING								
[1] Cooling Speed DIP Switch Settings	First Stage Cooling Speed - cfm				Second Stage Cooling Speed - cfm			
	Low	Medium-Low	Medium-High	[2] High	Low	Medium-Low	Medium-High	[2] High
+	755	805	865	975	1015	1095	1190	1330
Factory Default	700	740	790	885	940	1005	1100	1205
–	645	680	725	800	850	920	1000	1100

SL280UH090V36BK BLOWER PERFORMANCE (less filter)
BOTTOM RETURN AIR
0 through 0.8 in. w.g. (Heating) and 0 through 1.0 in. w.g. (Cooling) External Static Pressure Range

HEATING		
[1] Heating Speed DIP Switch Settings	First Stage Heating Speed - cfm	Second Stage Heating Speed - cfm
+24%	1300	1420
+18%	1250	1335
+12%	1185	1285
+6%	1145	1240
Factory Default	1070	1170
–6%	1015	1100
–12%	970	1035
–18%	880	980

COOLING								
[1] Cooling Speed DIP Switch Settings	First Stage Cooling Speed - cfm				Second Stage Cooling Speed - cfm			
	Low	Medium-Low	Medium-High	[2] High	Low	Medium-Low	Medium-High	[2] High
+	665	795	875	1020	1030	1210	1315	1435
Factory Default	605	740	815	925	940	1105	1210	1305
–	530	685	745	845	855	1005	1095	1185

[1] Cooling and heating speeds are based on a combination of DIP switch settings on the furnace control. Refer to Installation Instructions for specific DIP Switch Settings.
[2] Factory default setting.

NOTES - The effect of static pressure is included in air volumes shown.
First stage HEAT is approximately 91% of the same second stage HEAT.
First stage COOL (two-stage air conditioning units only) is approximately 70% of the same second stage COOL speed position.
Continuous Fan Only speed is selectable at 28% and 38% of the selected second stage cooling speed - minimum 250 cfm.
Lennox® Smart Zoning System Applications - Minimum blower speed is 250 cfm.

BLOWER DATA

SL280UH090V48BK BLOWER PERFORMANCE (less filter)
BOTTOM RETURN AIR
0 through 0.8 in. w.g. (Heating) and 0 through 1.0 in. w.g. (Cooling) External Static Pressure Range

HEATING		
[1] Heating Speed DIP Switch Settings	First Stage Heating Speed - cfm	Second Stage Heating Speed - cfm
+24%	1280	1410
+18%	1220	1340
+12%	1155	1270
+6%	1095	1205
Factory Default	1035	1135
–6%	970	1070
–12%	910	1000
–18%	845	930

COOLING								
[1] Cooling Speed DIP Switch Settings	First Stage Cooling Speed - cfm				Second Stage Cooling Speed - cfm			
	Low	Medium-Low	Medium-High	[2] High	Low	Medium-Low	Medium-High	[2] High
+	735	920	1030	1170	1010	1320	1520	1710
Factory Default	670	840	965	1070	920	1175	1400	1560
–	590	755	865	995	820	1045	1255	1440

SL280UH090V60CK BLOWER PERFORMANCE (less filter)
BOTTOM RETURN AIR, RETURN AIR FROM BOTH SIDES OR RETURN AIR FROM BOTTOM AND ONE SIDE
0 through 0.8 in. w.g. (Heating) and 0 through 1.0 in. w.g. (Cooling) External Static Pressure Range

HEATING		
[1] Heating Speed DIP Switch Settings	First Stage Heating Speed - cfm	Second Stage Heating Speed - cfm
+24%	1420	1565
+18%	1355	1490
+12%	1285	1415
+6%	1215	1335
Factory Default	1145	1260
–6%	1080	1185
–12%	1010	1110
–18%	940	1035

COOLING								
[1] Cooling Speed DIP Switch Settings	First Stage Cooling Speed - cfm				Second Stage Cooling Speed - cfm			
	Low	Medium-Low	Medium-High	[2] High	Low	Medium-Low	Medium-High	[2] High
+	1080	1210	1385	1615	1505	1710	1950	2260
Factory Default	985	1105	1260	1470	1375	1540	1800	2055
–	880	1000	1140	1335	1235	1395	1590	1890

[1] Cooling and heating speeds are based on a combination of DIP switch settings on the furnace control. Refer to Installation Instructions for specific DIP Switch Settings.
[2] Factory default setting.

NOTES - The effect of static pressure is included in air volumes shown.
First stage HEAT is approximately 91% of the same second stage HEAT.
First stage COOL (two-stage air conditioning units only) is approximately 70% of the same second stage COOL speed position.
Continuous Fan Only speed is selectable at 28% and 38% of the selected second stage cooling speed - min 380 cfm 090V48B, min 450 cfm 090V60C.
Lennox® Smart Zoning System Applications - Minimum blower speed is 380 cfm 090v48C, 450 cfm. 090V60C

BLOWER DATA

SL280UH110V60CK BLOWER PERFORMANCE (less filter)
BOTTOM RETURN AIR, RETURN AIR FROM BOTH SIDES OR RETURN AIR FROM BOTTOM AND ONE SIDE
0 through 0.8 in. w.g. (Heating) and 0 through 1.0 in. w.g. (Cooling) External Static Pressure Range

HEATING		
[1] Heating Speed DIP Switch Settings	First Stage Heating Speed - cfm	Second Stage Heating Speed - cfm
+24%	1690	1855
+18%	1605	1765
+12%	1525	1675
+6%	1445	1585
Factory Default	1360	1495
–6%	1280	1405
–12%	1200	1315
–18%	1115	1230

COOLING								
[1] Cooling Speed DIP Switch Settings	First Stage Cooling Speed - cfm				Second Stage Cooling Speed - cfm			
	Low	Medium-Low	Medium-High	[2] High	Low	Medium-Low	Medium-High	[2] High
+	1150	1215	1340	1550	1635	1705	1855	2220
Factory Default	1045	1095	1220	1420	1510	1565	1710	1955
–	935	985	1095	1275	1375	1440	1555	1765

SL280UH135V60DK BLOWER PERFORMANCE (less filter)
BOTTOM RETURN AIR, RETURN AIR FROM BOTH SIDES OR RETURN AIR FROM BOTTOM AND ONE SIDE
0 through 0.8 in. w.g. (Heating) and 0 through 1.0 in. w.g. (Cooling) External Static Pressure Range

HEATING		
[1] Heating Speed DIP Switch Settings	First Stage Heating Speed - cfm	Second Stage Heating Speed - cfm
+24%	1875	2065
+18%	1785	1965
+12%	1695	1865
+6%	1605	1765
Factory Default	1515	1665
–6%	1425	1565
–12%	1330	1465
–18%	1240	1365

COOLING								
[1] Cooling Speed DIP Switch Settings	First Stage Cooling Speed - cfm				Second Stage Cooling Speed - cfm			
	Low	Medium-Low	Medium-High	[2] High	Low	Medium-Low	Medium-High	[2] High
+	1075	1165	1280	1605	1455	1600	1745	2245
Factory Default	975	1070	1210	1470	1325	1455	1660	2005
–	905	975	1105	1345	1240	1325	1515	1825

[1] Cooling and heating speeds are based on a combination of DIP switch settings on the furnace control. Refer to Installation Instructions for specific DIP Switch Settings.
[2] Factory default setting.

NOTES - The effect of static pressure is included in air volumes shown.
First stage HEAT is approximately 91% of the same second stage HEAT.
First stage COOL (two-stage air conditioning units only) is approximately 70% of the same second stage COOL speed position.
Continuous Fan Only speed is selectable at 28% and 38% of the selected second stage cooling speed - minimum 450 cfm.
Lennox® Smart Zoning System Applications - Minimum blower speed is 450 cfm.

Program Unit Capacity / Size Mode

Power-Up - Number displayed represents by integrated control unit size code (furnace model and capacity). If three horizontal bars are displayed followed by continuous E203, furnace control does not recognize **unit size code.** Configure per the following:

Furnace control in **IDLE** mode No heating, cooling or indoor fan operation)

Yes

To enter **Program Unit Capacity/Size:** push and hold button next to 7-segment LED display until **solid "P"** symbol appears. Release button.

***IMPORTANT**: Field replacement controls may need to be manually configured to validate furnace unit size code.*

Solid **P** starts blinking on 7-Segment LED

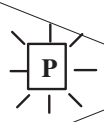

Push and hold button. Integrated control will display unit size code number for each furnace model for three seconds.

No

Turn room thermostat to **OFF**

UNIT SIZE CODE	FURNACE MODEL	UNIT SIZE CODE	FURNACE MODEL
A	SL280UH070V36A	H	SL280DF070V36A
b	SL280UH090V36B	J	SL280DF090V48B
C	SL280UH090V48B	L	SL280DF090V60C
d	SL280UH090V60C	n	SL280DF110V60C
E	SL280UH110V60C		
F	SL280UH135V60D		

When the correct unit size code is displayed, release button. Selected code will flash for 10-second period. During that period, press and hold push button for 5 seconds. Integrated control will store code in memory and will automatically exit **Program Unit Capacity/Size Mode** and reset. (If second period expires or push button is held less than five seconds, control will automatically exit **Program Capacity/Size Mode** and go into **IDLE** mode without storing unit size code. If this happens, programming function must be repeated).

Verify that the selected unit size code is correct and stored in non-volatile memory by cycling the 24 volt power to the furnace control. (At 24 volt power-up of the furnace control, the 7-segment LED will display a unit size code. If three horizontal bars display, board does not recognize unit size code. Programming function must be repeated)

FINISHED

CALL FOR FIRST-STAGE HEAT

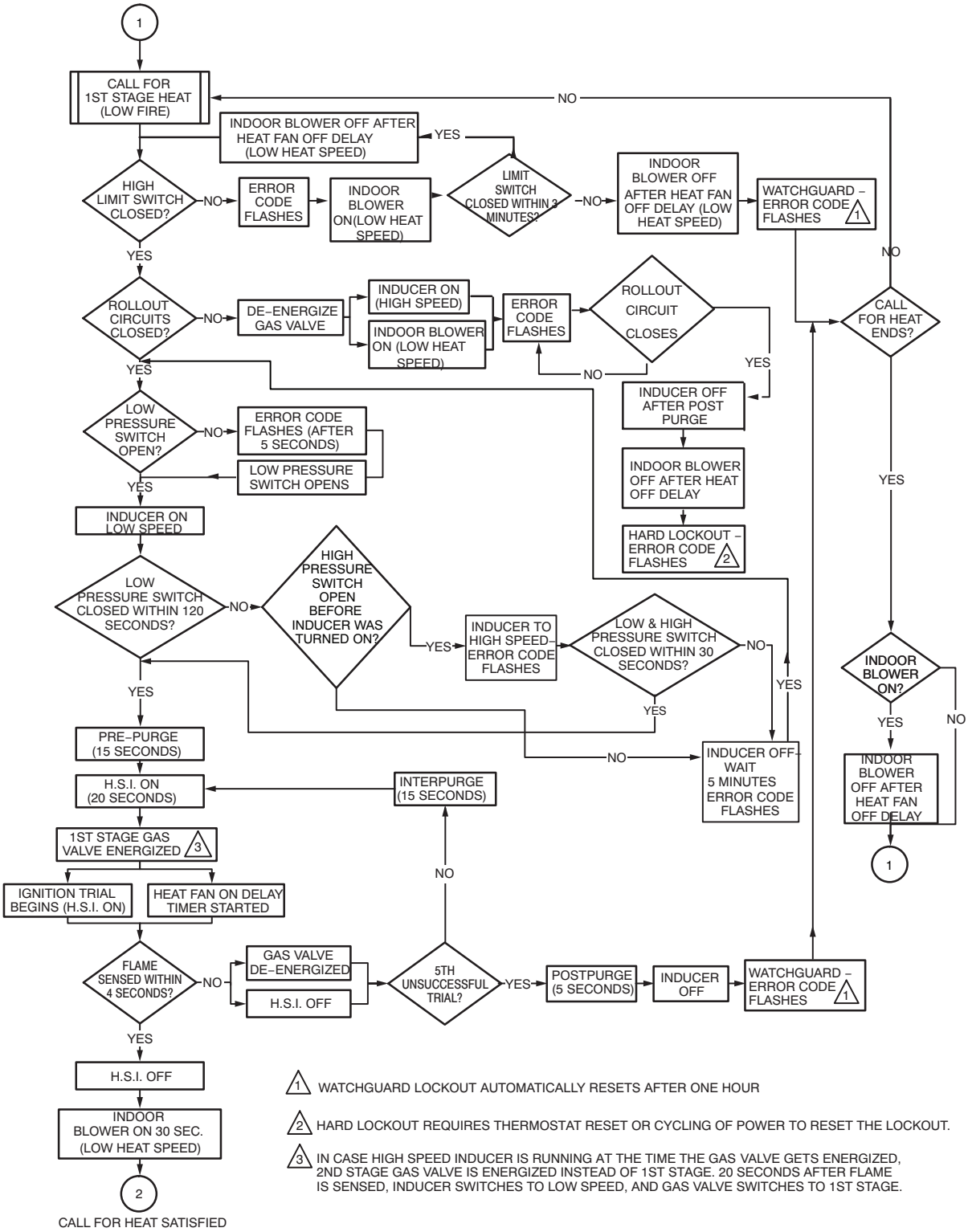

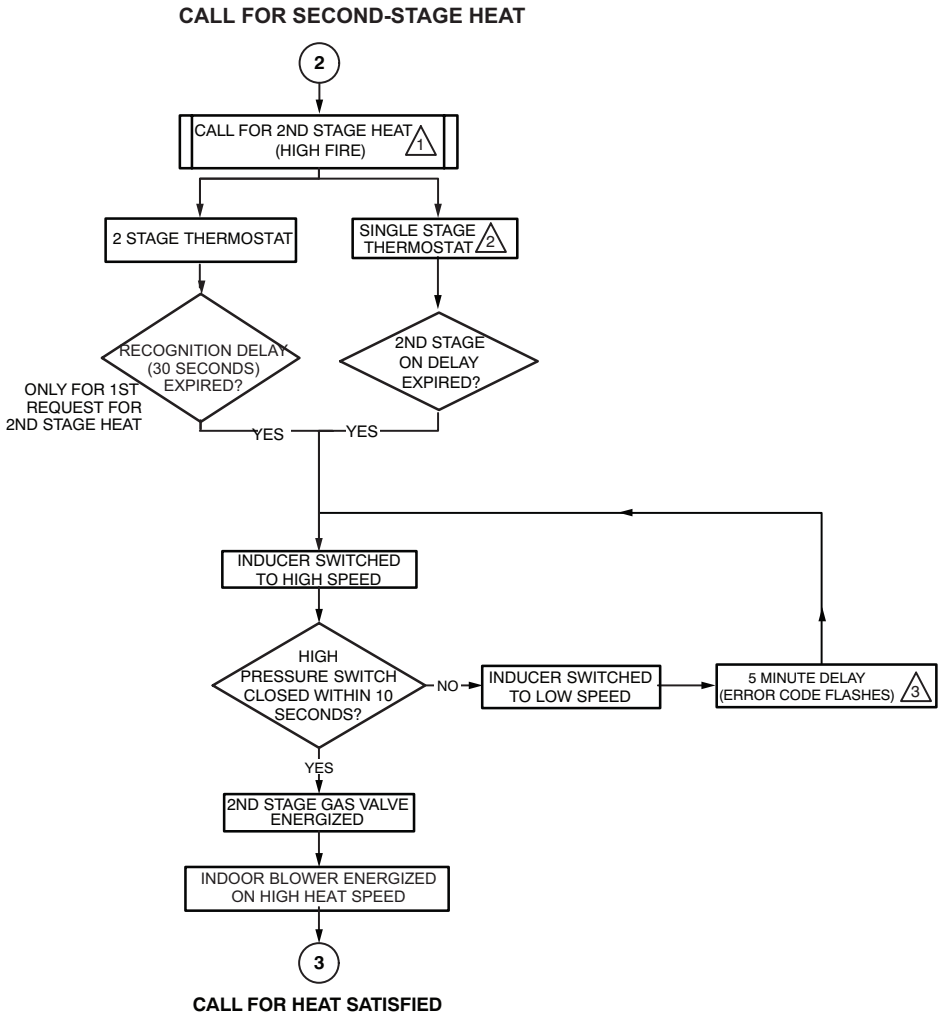

1 SYSTEM WILL ALWAYS LIGHT ON LOW FIIRE, EVEN IF 2ND STAGE HEAT IS IN PLACE.

2 WHEN USED WITH A SINGLE STAGE THERMOSTAT, SET SW1 TO THE ON POSITION IN DIP SWITCH S4.

3 IF THE HIGH FIRE PRESSURE SWITCH DOES NOT CLOSE WITHIN 5 ATTEMPTS, THE SYSTEM WILL OPERATE AT LOW FIRE FOR THE REMAINDER OF THE CALL FOR HEAT REQUEST.

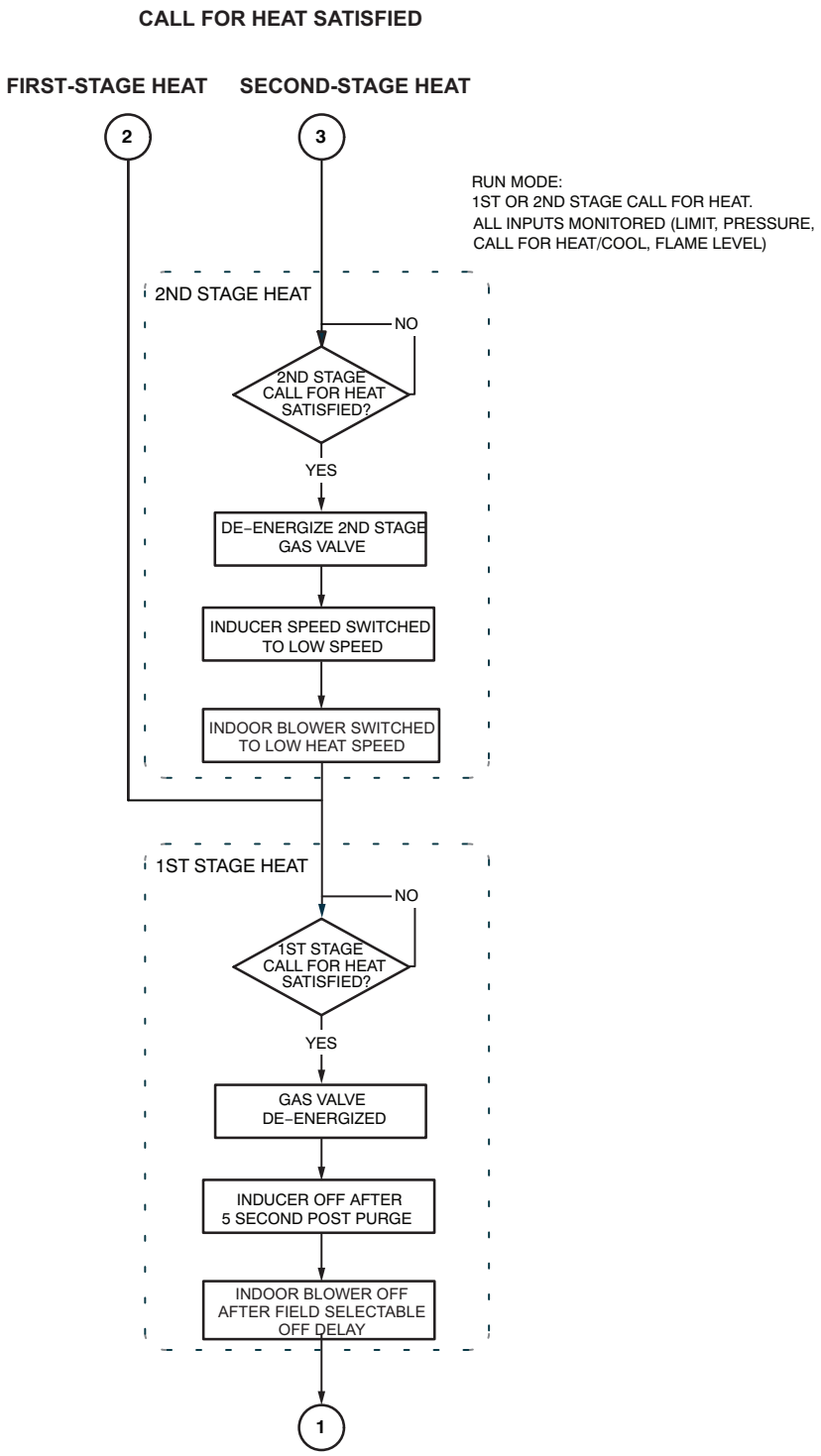
CALL FOR HEAT SATISFIED
FIRST-STAGE HEAT
SECOND-STAGE HEAT
2
3
RUN MODE:
1ST OR 2ND STAGE CALL FOR HEAT.
ALL INPUTS MONITORED (LIMIT, PRESSURE, CALL FOR HEAT/COOL, FLAME LEVEL)
2ND STAGE HEAT
NO
2ND STAGE CALL FOR HEAT SATISFIED?
YES
DE–ENERGIZE 2ND STAGE GAS VALVE
INDUCER SPEED SWITCHED TO LOW SPEED
INDOOR BLOWER SWITCHED TO LOW HEAT SPEED
1ST STAGE HEAT
NO
1ST STAGE CALL FOR HEAT SATISFIED?
YES
GAS VALVE DE–ENERGIZED
INDUCER OFF AFTER 5 SECOND POST PURGE
INDOOR BLOWER OFF AFTER FIELD SELECTABLE OFF DELAY
1

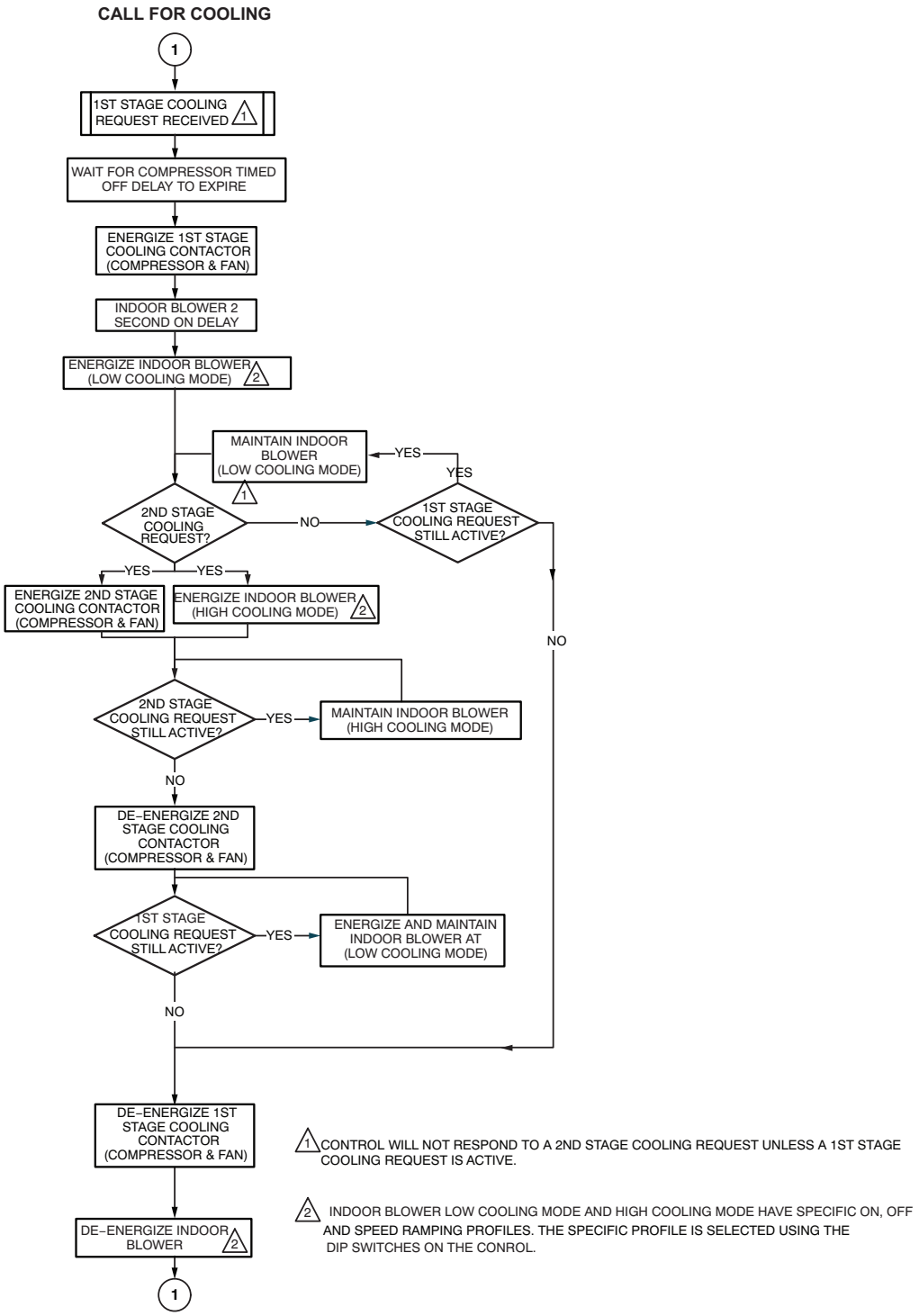
CALL FOR COOLING
1
1ST STAGE COOLING REQUEST RECEIVED 1
WAIT FOR COMPRESSOR TIMED OFF DELAY TO EXPIRE
ENERGIZE 1ST STAGE COOLING CONTACTOR (COMPRESSOR & FAN)
INDOOR BLOWER 2 SECOND ON DELAY
ENERGIZE INDOOR BLOWER (LOW COOLING MODE) 2
MAINTAIN INDOOR BLOWER (LOW COOLING MODE) 1
YES
YES
2ND STAGE COOLING REQUEST?
NO
1ST STAGE COOLING REQUEST STILL ACTIVE?
YES
YES
ENERGIZE 2ND STAGE COOLING CONTACTOR (COMPRESSOR & FAN)
ENERGIZE INDOOR BLOWER (HIGH COOLING MODE) 2
NO
2ND STAGE COOLING REQUEST STILL ACTIVE?
YES
MAINTAIN INDOOR BLOWER (HIGH COOLING MODE)
NO
DE–ENERGIZE 2ND STAGE COOLING CONTACTOR (COMPRESSOR & FAN)
1ST STAGE COOLING REQUEST STILL ACTIVE?
YES
ENERGIZE AND MAINTAIN INDOOR BLOWER AT (LOW COOLING MODE)
NO
DE–ENERGIZE 1ST STAGE COOLING CONTACTOR (COMPRESSOR & FAN)
DE–ENERGIZE INDOOR BLOWER 2
1
1 CONTROL WILL NOT RESPOND TO A 2ND STAGE COOLING REQUEST UNLESS A 1ST STAGE COOLING REQUEST IS ACTIVE.
2 INDOOR BLOWER LOW COOLING MODE AND HIGH COOLING MODE HAVE SPECIFIC ON, OFF AND SPEED RAMPING PROFILES. THE SPECIFIC PROFILE IS SELECTED USING THE DIP SWITCHES ON THE CONROL.

CALL FOR FAN

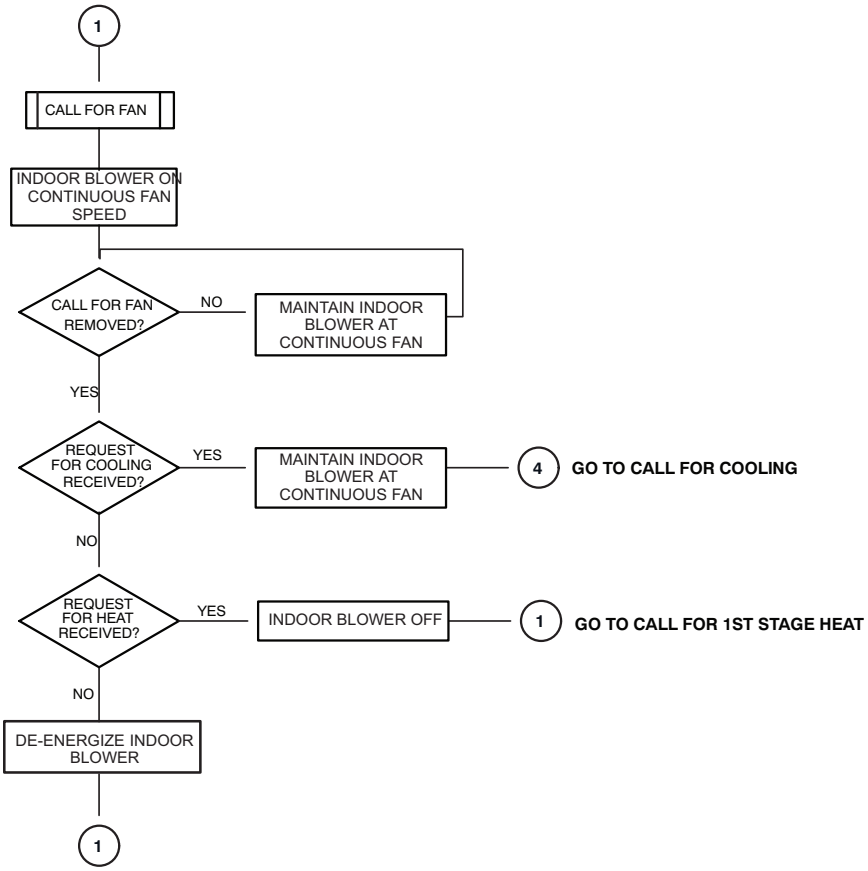
1
CALL FOR FAN
INDOOR BLOWER ON CONTINUOUS FAN SPEED
CALL FOR FAN REMOVED?
NO
MAINTAIN INDOOR BLOWER AT CONTINUOUS FAN
YES
REQUEST FOR COOLING RECEIVED?
YES
MAINTAIN INDOOR BLOWER AT CONTINUOUS FAN
4
GO TO CALL FOR COOLING
NO
REQUEST FOR HEAT RECEIVED?
YES
INDOOR BLOWER OFF
1
GO TO CALL FOR 1ST STAGE HEAT
NO
DE-ENERGIZE INDOOR BLOWER
1