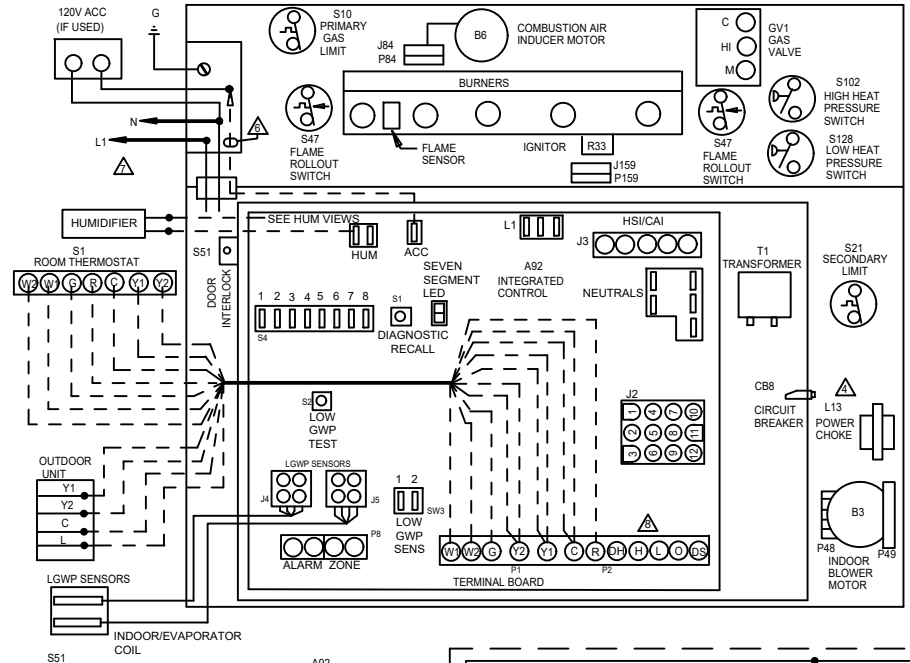

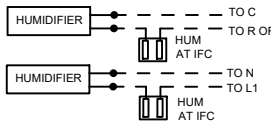

JACKPLUG CHART	
J,P48	JACK/PLUG-INDOOR BLOWER-POWER
J,P49	JACK/PLUG-INDOOR BLOWER-SPD TAP
J,P2	JACK/PLUG-BURNER CONTROL
J,P84	JACK/PLUG-COMB AIR INDUCER
J,P3	JACK/PLUG-INDUCER/IGNITER
J,P159	JACK/PLUG-IGNITION

1. CUT W914 JUMPER LABELED DEHUM FROM DS TO R, AT A92 CONTROL BOARD, WHEN USED WITH ComfortSense® 7000 THERMOSTAT
2. CUT W951 JUMPER FROM O TO R, LABELED "HEAT PUMP", AT A92 CONTROL BOARD, WHEN USED FOR DUAL FUEL APPLICATIONS
3. CUT W915 JUMPER LABELED "2 STAGE COMPR." FROM Y1 TO Y2 AT A92 CONTROL WHEN USED WITH A 2 STAGE COOL THERMOSTAT.
4. L13 USED ON 3/4 AND 1 HP ONLY
5. DIP SWITCH FACTORY DEFAULT IS FOR A TWO STAGE THERMOSTAT
6. FIELD SUPPLIED ACC WIRE
7. USE COPPER CONDUCTORS ONLY
8. DH AND L TERMINALS NOT USED.
9. DO NOT USE RED (LOW SPEED) FOR HIGH HEAT ON ALL MODELS.

THERMOSTAT HEAT ANTICIPATION SETTING	
.65 AMP	HONEYWELL VALVE
.43 AMP	WHITE RODGERS VALVE

NOTE: SEE INSTALLATION INSTRUCTIONS FOR PROCEDURE TO SET CORRECT BLOWER SPEED FOR SPECIFIC COOLING TONNAGE BEING APPLIED, AND HEATING TEMPERATURE RISE REQUIRED.

TYPICAL SYSTEM SHOWN FOR 2 HEAT/2 COOL WITH A CONVENTIONAL THERMOSTAT. SEE INSTALLATION INSTRUCTIONS FOR CONNECTIONS TO OTHER EQUIPMENT AND ACCESSORIES.

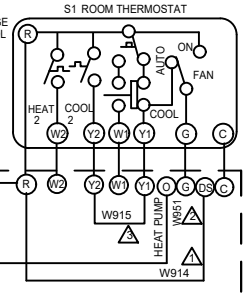

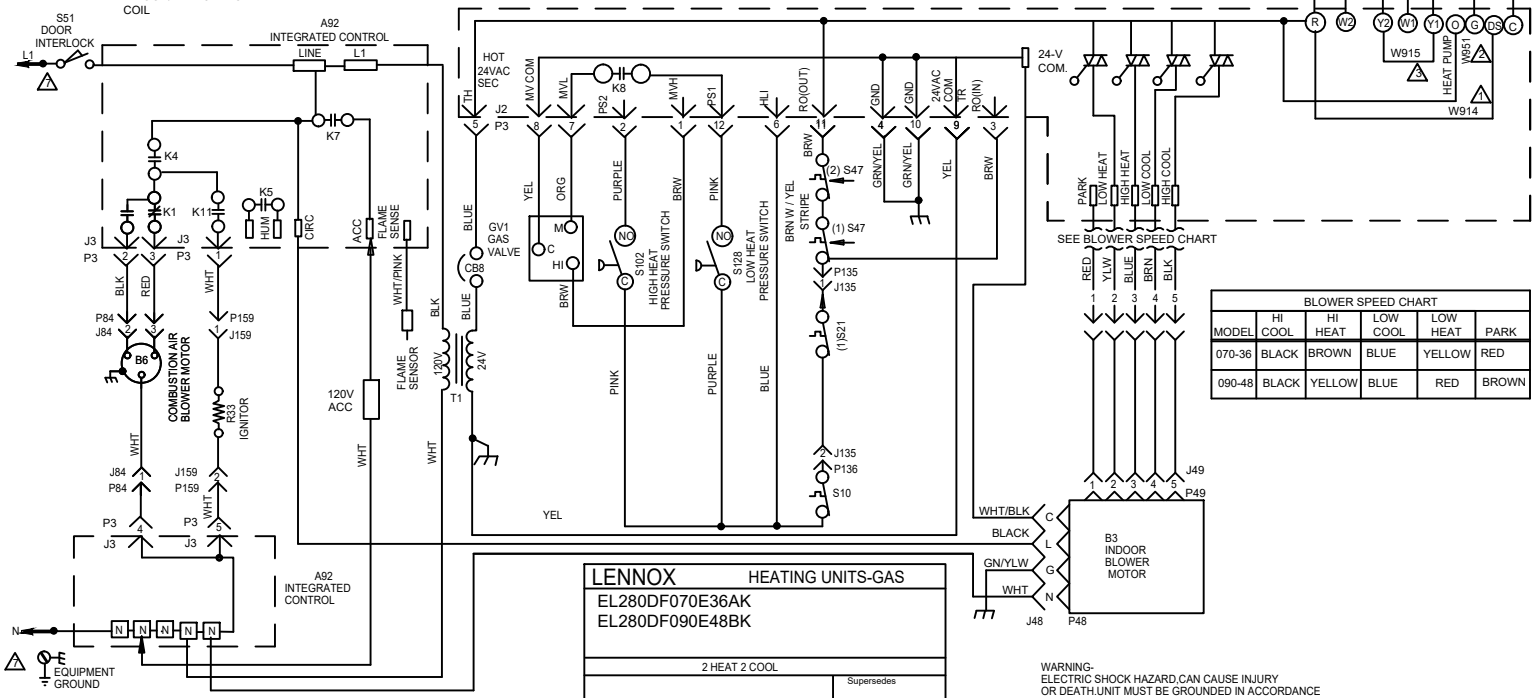

BLOWER SPEED CHART					
MODEL	HI COOL	HI HEAT	LOW COOL	LOW HEAT	PARK
070-36	BLACK	BROWN	BLUE	YELLOW	RED
090-48	BLACK	YELLOW	BLUE	RED	BROWN

LINE VOLTAGE FIELD INSTALLED
CLASS II VOLTAGE FIELD WIRING
DENOTES OPTIONAL COMPONENTS

LENNOX HEATING UNITS-GAS

EL280DF070E36AK
EL280DF090E48BK

2 HEAT 2 COOL

Supersedes

07/25

Form No. 538483-01

© 2011

Litho U.S.A.

WARNING-
ELECTRIC SHOCK HAZARD,CAN CAUSE INJURY OR DEATH.UNIT MUST BE GROUNDED IN ACCORDANCE WITH NATIONAL AND LOCAL CODES.

NOTE-
IF ANY WIRE IN THIS APPLIANCE IS REPLACED,IT MUST BE REPLACED WITH WIRE OF LIKE SIZE, RATING, INSULATION THICKNESS, AND TERMINATION

CUT SIZE: 9" WIDE x 8-1/4" HEIGHT