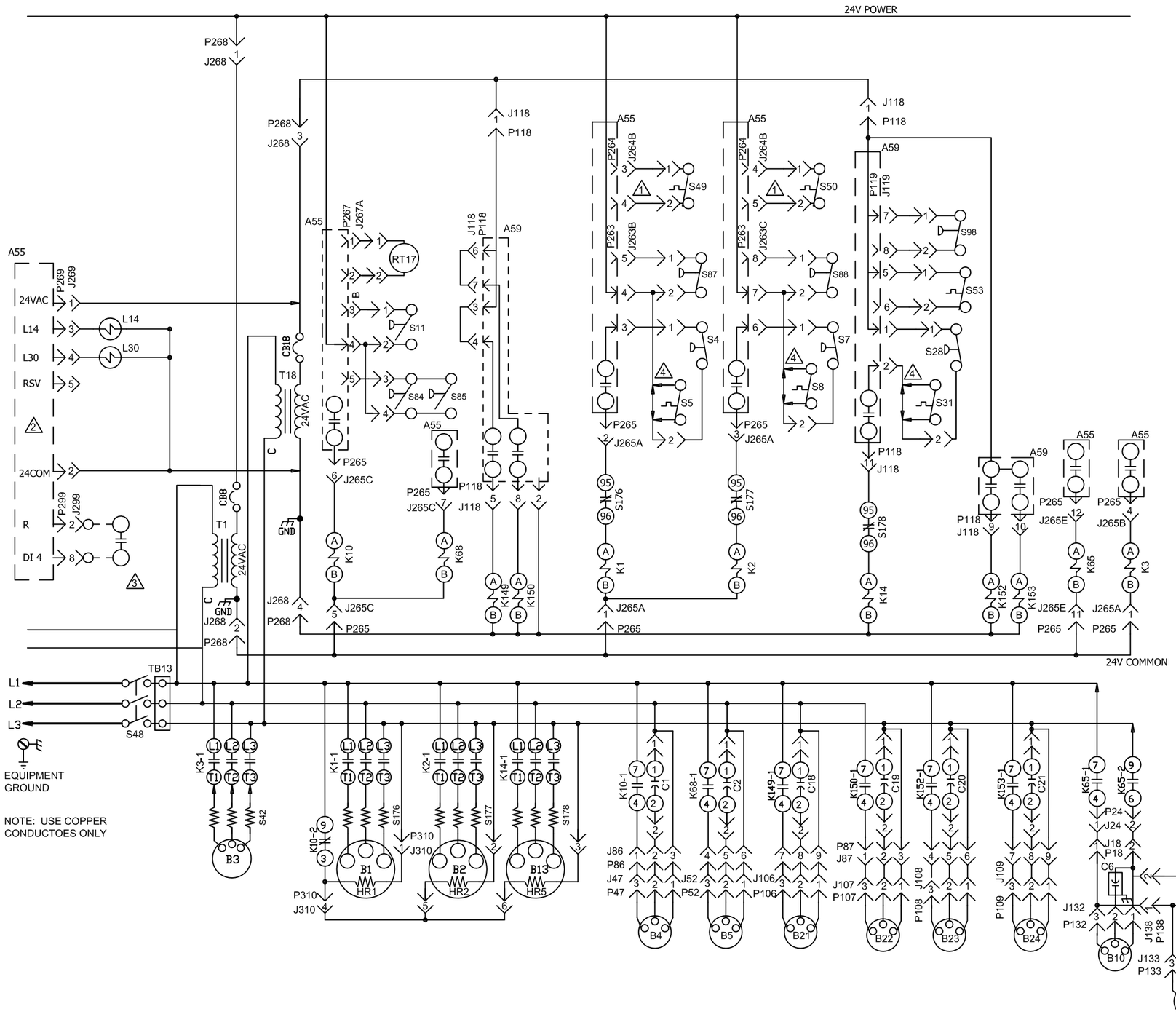

KEY	COMPONENT
A55	PANEL, MAIN
A59	PANEL, COMPRESSORS 3 AND 4
B1	COMPRESSOR 1
B2	COMPRESSOR 2
B3	MOTOR, BLOWER
B4	MOTOR, OUTDOOR FAN 1
B5	MOTOR, OUTDOOR FAN 2
B10	MOTOR, EXHAUST FAN 1
B11	MOTOR, EXHAUST FAN 2
B13	COMPRESSOR 3
B21	MOTOR, OUTDOOR FAN 3
B22	MOTOR, OUTDOOR FAN 4
B23	MOTOR, OUTDOOR FAN 5
B24	MOTOR, OUTDOOR FAN 6
C1	CAPACITOR, OUTDOOR FAN 1
C2	CAPACITOR, OUTDOOR FAN 2
C6	CAPACITOR, EXHAUST FAN 1
C8	CAPACITOR, EXHAUST FAN 2
C18	CAPACITOR, OUTDOOR FAN 3
C19	CAPACITOR, OUTDOOR FAN 4
C20	CAPACITOR, OUTDOOR FAN 5
C21	CAPACITOR, OUTDOOR FAN 6
CB8	CIRCUIT, BREAKER T1
CB18	CIRCUIT, BREAKER T18
HR1	HEATER COMPRESSOR 1
HR2	HEATER COMPRESSOR 2
HR5	HEATER COMPRESSOR 3
J18	JACK, EXHAUST FAN COMP
J24	JACK, EXHAUST FAN
J47	JACK, OUTDOOR FAN 1
J52	JACK, OUTDOOR FAN 2
J86	JACK, OUTDOOR FAN INTERFACE
J87	JACK, OUTDOOR FAN INTERFACE 2
J106	JACK, OUTDOOR FAN 3
J107	JACK, OUTDOOR FAN 4
J108	JACK, OUTDOOR FAN 5
J109	JACK, OUTDOOR FAN 6
J118	JACK, COMPRESSOR 3 AND 4, CONTROL
J119	JACK, COMPRESSOR 3 AND 4, INPUT
J132	JACK, BLOWER , EXHAUST FAN MOTOR 1
J133	JACK, BLOWER , EXHAUST FAN MOTOR 2
J138	JACK, EXHAUST FAN 2
J139	JACK, EXHAUST FAN 3
J263	JACK, HIGH AND LOW PRESSURE SWITCHES
J264	JACK, BLOWER DECK
J265	JACK, CONTACTORS AND RELAYS
J267	JACK, OUTDOOR FAN AREA
J268	JACK, TRANSFORMER 1 POWER
J269	JACK, HUMIDITROL
J299	JACK, HUMIDITROL INTERFACE
J310	JACK, CRANKCASE HEATERS
K1,-1	CONTACTOR, COMPRESSOR 1
K2,-1	CONTACTOR, COMPRESSOR 2
K3, -1	CONTACTOR, BLOWER
K10,-1	RELAY, OUTDOOR FAN 1
K14,-1	CONTACTOR, COMPRESSOR 3
K65-1,2	RELAY, EXHAUST FAN
K68,-1	RELAY, OUTDOOR FAN 2
K149,-1	RELAY, OUTDOOR FAN 3
K150,-1	RELAY, OUTDOOR FAN 4

K152,-1	RELAY, OUTDOOR FAN 5
K153,-1	RELAY, OUTDOOR FAN 6
L14	VALVE, SOLENOID REHEAT COIL 1
L30	VALVE, SOLENOID REHEAT COIL 2
P18	PLUG, EXHAUST FAN COMP
P24	PLUG, EXHAUST FAN
P47	PLUG, OUTDOOR FAN 1
P52	PLUG, OUTDOOR FAN 2
P86	PLUG, OUTDOOR FAN INTERFACE
P87	PLUG, OUTDOOR FAN INTERFACE 2
P106	PLUG, OUTDOOR FAN 3
P107	PLUG, OUTDOOR FAN 4
P108	PLUG, OUTDOOR FAN 5
P109	PLUG, OUTDOOR FAN 6
P118	PLUG, COMPRESSOR 3 AND 4, CONTROL
P119	PLUG, COMPRESSOR 3 AND 4, INPUT
P132	PLUG, EXHAUST FAN MOTOR 1
P133	PLUG, EXHAUST FAN MOTOR 2
P138	PLUG, EXHAUST FAN 2
P263	PLUG, HIGH AND LOW PRESSURE SWITCHES
P264	PLUG, BLOWER DECK
P265	PLUG, CONTACTORS AND RELAYS
P267	PLUG, OUTDOOR FAN AREA
P268	PLUG, TRANSFORMERS
P269	PLUG, HUMIDITROL
P299	PLUG, SAFETY
P310	PLUG, CRANKCASE HEATERS
RT17	SENSOR, OUTDOOR AIR
S4	SWITCH, LIMIT HI PRESS COMPRESS 1
S5	SWITCH, LIMIT HI TEMP COMPRESS 1
S7	SWITCH, LIMIT HI PRESS COMPRESS 2
S8	SWITCH, LIMIT HI TEMP COMPRESS 2
S11	SWITCH, LOW PRESS, LOW AMBIENT KIT COMP 1
S28	SWITCH, LIMIT HI PRESS COMPRESS 3
S31	SWITCH, LIMIT HI TEMP COMPRESS 3
S42	SWITCH, OVERLOAD RELAY BLOWER MOTOR
S48	SWITCH, DISCONNECT
S49	SWITCH, FREEZE STAT COMPRESS 1
S50	SWITCH, FREEZE STAT COMPRESS 2
S53	SWITCH, FREEZE STAT COMPRESS 3
S84	SWITCH, LOW PRESS, LOW AMBIENT KIT COMP 2
S85	SWITCH, LOW PRESS, LOW AMBIENT KIT COMP 3
S87	SWITCH, LOW PRESS, COMP 1
S88	SWITCH, LOW PRESS, COMP 2
S98	SWITCH, LOW PRESS, COMP 3
S176	SWITCH, OVERLOAD COMPRESSOR 1
S177	SWITCH, OVERLOAD COMPRESSOR 2
S178	SWITCH, OVERLOAD COMPRESSOR 3
T1	TRANSFORMER, CONTROL
T18	TRANSFORMER, CONTACTOR
TB13	TERMINAL STRIP, POWER DISTRIBUTION

NOTE - IF ANY WIRE IN THIS APPLIANCE IS REPLACED IT MUST BE REPLACED WITH WIRE OF LIKE SIZE, RATING, TERMINATION AND INSULATION THICKNESS.

WARNING - ELECTRIC SHOCK HAZARD, CAN CAUSE INJURY OR DEATH . UNIT MUST BE GROUNDED IN ACCORDANCE WITH NATIONAL AND LOCAL CODES.

DISCONNECT ALL POWER BEFORE SERVICING.

1. S49 AND S50 ARE PART OF 5VDC CIRCUIT
2. ONLY IN UNITS WITH HUMIDITROL OPTION
3. EXTERNAL HUMIDITROL CONTACTS
4. S5, S8, S31 USED ON UNITS WITH INTERLINK COMPRESSORS ONLY

DENOTES OPTIONAL COMPONENTS

LINE VOLTAGE FIELD INSTALLED

WIRING DIAGRAM		02/11
COOLING - CE		
LCH, LGH 210 M		
SECTION B		REV 1.0
Supersedes	New Form No. 537326-01	

© 2011 Lennox Commercial

3/1/2011 2:55:37 PM, 10 x 17