GAS FURNACES

ML296DFV

MERIT® SERIES

Downflow - Two-Stage Heating - Variable Speed Blower - 60 Hz

RESIDENTIAL PRODUCT SPECIFICATIONS

Bulletin No. 210870
July 2026
Supersedes all previous versions

MERIT® SERIES

ENERGY STAR

QUALIFIED ONLY IN

U.S. SOUTH: AL, AZ, AR, CA, DC, DE, FL, GA, HI, KY, LA, MD, MS, NV, NM, NC, OK, SC, TN, TX, VA

AFUE - 96%
Input - 44,000 to 88,000 Btuh
Nominal Add-on Cooling - 3 to 5 Tons

MODEL NUMBER IDENTIFICATION

ML 2 96 DF 070 X V 48 B

Unit Type
ML = Merit® Series

Stages
2 = Two-Stage

AFUE
96 = 96%

Configuration
DF = Downflow

Nominal Gas Heat Input
045 = 44,000 Btuh
070 = 66,000 Btuh
090 = 88,000 Btuh

Low NOX
X = Units meet California Nitrogen Oxides Standard (40ng/J)

Blower
V = Variable Speed Blower Motor

Nominal Add-On Cooling Capacity
36 = 2 - 3 tons
48 = 2.5 - 4 tons
60 = 3 - 5 tons

[1] **Cabinet Width**
B = 17-1/2 in.
C = 21 in.

[1] Downflow indoor coils with the same letter designation will physically match the furnace **supply air opening**.

FEATURE HIGHLIGHTS

1. Lennox Duralok Plus™ Heat Exchanger
2. Secondary Heat Exchanger
3. Inshot Burners
4. Two-Stage Gas Control Valve
5. Two-Speed Combustion Air Inducer
6. SureLight® Integrated Furnace Control
7. Variable Speed Direct Drive Blower
8. Insulated Cabinet
9. Safety Interlock Switch
10. Gas Piping And Electrical Inlets

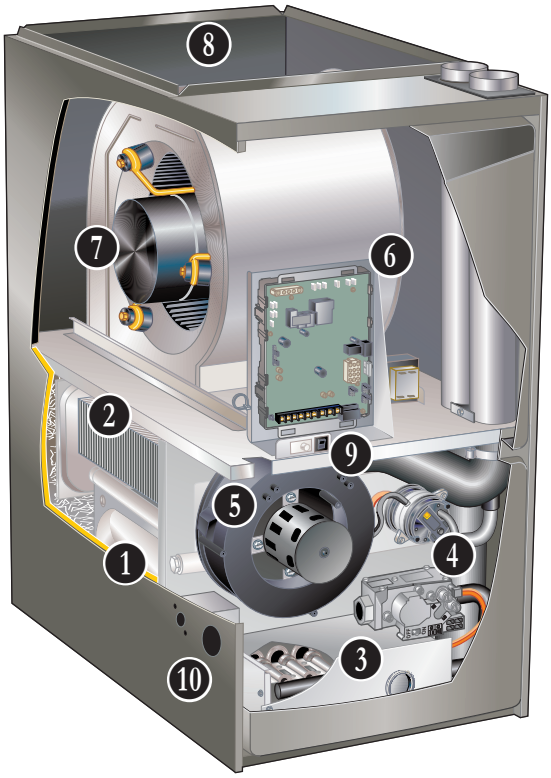

NOTE - ML296DFV FURNACES CANNOT BE TWINNED!

CONTENTS

Blower Data 19
Approvals And Warranty 3
Dimensions 13
- Furnace/Coil Combined Dimensions 15
- Optional Accessories 14
- Optional Accessories - Venting. 16
- Unit 13
Features 3
Gas Heat Accessories 12
High Altitude Derate 12
Installation Clearances 8
Model Number Identification. 1
Optional Accessories 9
Specifications 8
Vent Lengths - Exhaust Using Ventilated Attic/Crawlspace Intake Air. 12
Vent Lengths - Uninsulated Exhaust Pipe In Unconditioned Space 10

APPROVALS AND WARRANTY

APPROVALS

- AHRI Certified
- Certified by CSA International
- Tested and rated according to US DOE test procedures and FTC labeling regulations
- ENERGY STAR® units are certified only in the U.S. South in certain states and are designed to use less energy, help save money on utility bills, and help protect the environment
- ISO 9001 Registered Manufacturing Quality System
- Blower data from unit tests conducted in Lennox Laboratory air test chamber

NOTE - This furnace has not been CSA International design certified for installation in mobile homes, recreational vehicles, or outdoors.

California Only

- These furnaces **do not meet** the South Coast Air Quality Management District (SCAQMD) Rule 1111 and San Joaquin Valley Air Pollution Control District (SJVAPCD) Rule 4905 NOx emission limit (14 ng/J) and cannot be installed within the SCAQMD, SJVAPCD and Bay Area
- These furnaces are approved by the California Energy Commission and meets California Nitrogen Oxides Standard (NOx) limits of 40 ng/J

WARRANTY

- Duralok Plus™ Aluminized Steel Heat Exchanger:
  - Limited twenty years in residential applications
  - Limited ten years in non-residential applications
- All other covered components:
  - Limited five years in residential installations
  - Limited one year in non-residential installations

NOTE - Refer to Lennox® Basic Limited Warrenty at www.Lennox.com for additional details.

FEATURES

APPLICATIONS

- Input capacities of 44,000, 66,000 and 88,000 Btuh
- Energy efficiency (AFUE) - 96%
- Compact cabinet for downflow applications without any internal modifications
- Lennox add-on indoor coils, high-efficiency air cleaners and humidifiers can easily be added to furnace
- Variable speed blower is ideal for zoning applications
- Shipped factory assembled with controls installed and wired
- Each unit factory test operated to ensure proper operation

ZONING APPLICATIONS

- Units may be used with certain zoning systems
- Zone control panel must be able to interface and communicate with the variable speed blower motor in the unit
- Lennox® LZSV Variable Zoning System has this capability

HEATING SYSTEM

1 Lennox Duralok Plus™ Heat Exchanger Assembly

- Lennox developed heat exchanger assembly consists of primary heat exchanger and secondary condenser coil assembly
- Main multi-pass crimped seam design clamshell type heat exchanger
- Constructed of heavy-gauge, aluminized steel
- Designed for normal expansion and contraction with maximum efficiency and minimum resistance to air flow
- 2 Secondary heat exchanger condenser coil constructed of aluminum fins fitted to stainless steel tubes
- Coil is factory tested for leaks
- Condensate drain header box assembly located on front of coil
- Compact size of complete heat exchanger assembly permits low overall design of furnace cabinet
- Heat exchanger assembly has been laboratory life cycle tested in excess of industry standards

HEATING SYSTEM (continued)

Lennox Designed Header Box
- Header box on end of condenser coil collects flue condensate for disposal through condensate drains
- The drains are located on each side of the cabinet for easy field installation of condensate drain trap
- Only one drain is used, the other drain is sealed
- Condensate drain trap is included with unit for field installation

Lennox Designed Flue Condensate Trap Assembly
- Condensate trap assembly is mounted outside the conditioned air stream
- Assembly can be mounted on either side of cabinet. See Installation Instructions
- 90° street elbow furnished for ease of drain trap installation
- Drain connection can be made with field provided PVC pipe, PVC coupling, or vinyl tubing with hose clamp
- Drain cap on trap allows easy cleaning and winterizing

3 Inshot Burners
- Aluminized steel inshot burners provide efficient, trouble-free operation
- Burner venturi mixes air and gas in correct proportion for proper combustion
- Burner assembly is removable from the unit as a single component for ease of service

SureLight® Hot Surface Ignitor
- Tough, reliable, long-life, trouble-free performance
- Silicon nitride ignitor
- Cemented to steatite block for protection against current leakage
- Ignition leads are constructed of nickel plated copper and are enclosed in high temperature Teflon® insulation for dependable operation

4 Two-Stage Gas Control Valve
- 24 volt redundant combination two-stage gas control valve combines manual shut off switch (On-Off), automatic electric valve (dual) and gas pressure regulation into a compact combination control

5 Two-Speed Combustion Air Inducer
- Permanent split capacitor (PSC) motor
- Heavy duty blower prepurges heat exchanger and safely vents flue products
- Dual pressure switches (low fire/high fire) prove blower operation before allowing gas valve to open
- Operates only during heating cycle

Flame Rollout Switches (2)
- Factory installed on burner box
- Switch provides protection from abnormal operating conditions
- Manual reset

Limit Control
- Primary limit is accurately located on vestibule panel on all units
- Automatic reset

Optional Accessories

High Altitude Orifice Kits
- Required on all units for proper unit operation at altitudes from 7501 to 10,000 ft.
- Kits are available for natural gas and LPG/propane

High Altitude Pressure Switch Kit
- Required for proper unit operation on installations above 4500 ft.

Natural Gas to LPG/Propane Conversion Kit
- Required for field changeover from natural gas to LPG/Propane

LPG/Propane to Natural Gas Conversion Kit
- Required for field changeover from LPG/Propane to natural gas

Muffler (US Only)
- Significantly reduces outdoor operating sound levels
- Two-inch diameter muffler is optional for 045 through 90 input models
- See Optional Accessory Dimension Drawing

DIRECT VENT / NON-DIRECT VENT SEALED COMBUSTION SYSTEM

- Furnace features a “sealed combustion” system and can be installed in either Direct Vent or Non-Direct applications
- In Direct Vent applications, combustion air is supplied from outdoors and flue gases are discharged outdoors
- In Non-Direct Vent applications, combustion air is supplied from indoors and flue gases are discharged outdoors

NOTE - Lennox has approved the use of DuraVent® PolyPro® and Centrotherm InnoFlue® manufactured vent pipe and terminations as an alternative to PVC vent pipe. Must be ordered separately.

- Tested and listed to the ULC S636 standard in Canada
- The polypropylene venting system must follow the uninsulated and unconditioned space vent lengths listed in the table on 11
- Refer to the Installation Instructions for additional details

Flue Coupling
- Assists with exhaust flue piping connection and servicing
- Includes flexible one 2 inch rubber coupling and two adjustable bands
- Approved for all Lennox 90% furnaces

DIRECT VENT / NON-DIRECT VENT SEALED COMBUSTION SYSTEM (continued)

Termination Kits

- Facilitates installation of combustion air intake pipe and flue exhaust pipe
- Refer to venting table in this bulletin to determine pipe size needed and proper termination kit required
- Certain Termination Kits are certified to ULC S636 standard for use in Canada only
- See Optional Accessories table and dimension drawings

Concentric - Direct Vent Applications

- 2 or 3 inch kit contains concentric termination assembly, reducer bushing and 45 degree elbow
- 2 inch kit for -045-070 models contains an outdoor exhaust accelerator
- Kit requires single hole penetration of roof or wall for installation
- Roof Termination Flashing Kit is available for use with 2 inch Kits
- CSA certified

Flush-Mount

- Kit contains flush-mount termination, accelerator, mounting template and hardware
- Kit may be used with 2, 2-1/2 or 3 in. pipe

Wall Assembly
Close Couple (US Only) - Direct Vent Applications

- 2 or 3 inch kit consists of close-couple, side-by-side PVC piping with galvanized steel wall cover plate for sealing and isolating piping penetration of the wall
- Piping spacing and length is sized for proper wall installations
- CSA certified

Close Couple WTK (Canada Only) - Direct Vent Applications

- 2 or 3 inch kit contains one insulated faceplate, one insulated exhaust pipe, elbow and fittings. Certified to ULC S636 standard

NOTE - Maintain a maximum of 6 inches between the inlet and outlet openings in the installation of the pipes

Roof Termination Flashing Kit

- For vertical venting through a roof
- 2 or 3 inch kit contains two neoprene rubber roof flashings
- Vent pipe and insulation not furnished
- Flashing Kit can also be used with Concentric Vent Termination Kits used in vertical venting rooftop applications

Left Side Vent Kit

- Allows venting out the left side of the cabinet
- Kit contains left vent tube and seal plate

CONTROLS

6 SureLight® Integrated Two-Stage / Variable Speed Blower Furnace Control

- Contains all necessary controls and relays to operate furnace
- Combustion air inducer is operated by the integrated furnace control. Prior to ignition, a low speed pre-purge cycle for 15 seconds is initiated. After the main burners are turned off, a post-purge cycle for 5 seconds is run
- Flame sensor utilizes flame rectification for safe and reliable operation
- Should flame fail to ignite, control will initiate 5 re-attempts at ignition before locking out unit operation for 60 minutes
- Watchguard type circuit automatically resets ignition controls after one hour of continuous thermostat demand after unit lockout, eliminating nuisance calls for service
- Jumper settings for single or two-stage thermostat operation
  - Two selectable second stage recognition times (5 and 10 minutes) are available when the furnace is used with a single stage thermostat
  - When used with a two-stage thermostat, furnace will only initiate second stage operation with a second stage thermostat demand
- Three LED's indicate unit status and aid in troubleshooting:
  - CFM LED (amber) - Indicates blower cfm
  - STATUS LED (red) - Flashes diagnostic codes
  - HIGH HEAT LED (green) - On indicates high heat demand
- Two accessory terminals are furnished for additional power supply requirements for 120 volt (less than 1 amp) powered IAQ accessories
- Two blower speeds, second stage heat and second stage cool (with four air volume selections for each (A, B, C, D) are selected by jumpers on control
- Heat speed can be adjusted to optimize discharge temperature
- Cool speed can be adjusted to correct optional cooling capacity
- See Blower Performance tables
- First stage blower speed is a percentage of second stage speed
- The ADJUST jumper allows normal (NORM), 10% higher (+ plus) or 10% lower (– minus) motor speed selection within the HEAT and COOL speeds selected for fine tuning air volume
- Controls humidity by controlling blower and compressor speed on two-stage outdoor units when used with Lennox M30 Smart Wi-Fi Thermostat or separate humidity control

FEATURES

CONTROLS (continued)

- Passive Dehumidification - For situations where humidity control is a desired, a dehumidification feature is built into the variable speed motor
- Motor runs at 82% for 7-1/2 minutes and then at 100% (if needed) until demand is satisfied. Once demand is met, motor ramps down to 82% for one minute before shut off
- Active or Humiditrol® Dehumidification - A jumper on the control must be clipped to enable active dehumidification and/or operation with a Humiditrol® Whole-Home Dehumidification System
- A humidity controlling thermostat or separate humidity control is also required
  - 1st Stage Demand - Motor runs at 57% for 7-1/2 minutes of 1st stage cooling demand and then at 70% until demand is satisfied
  - 2nd Stage Demand - Motor runs at 100% of the selected cooling air flow. When the demand for cooling is met, the blower runs at 57% for 1 minute before shut off
- In heat mode, blower on time is fixed at 30 seconds (non-adjustable), blower off time is integral to ECM blower motor
- For air-conditioning applications, blower on time is 2 seconds (non-adjustable) following thermostat demand for cooling
- Control is factory installed in the unit control box

24 Volt Transformer (40VA)

- Furnished and factory installed on outside of control box
- Circuit breaker (furnished) is wired in series

Field Wiring Make-Up Box

- Furnished for line voltage wiring
- Factory installed internally on left side of furnace
- Box may be installed internally on right side of furnace

Optional Accessories

M30 Smart Wi-Fi Thermostat

- Wi-Fi-enabled, electronic 7-day, universal, multi-stage, programmable, touchscreen thermostat
- 4 Heat/2 Cool
- Auto-changeover
- Dual-fuel control with optional outdoor sensor
- Controls dehumidification during cooling mode and humidification during heating mode

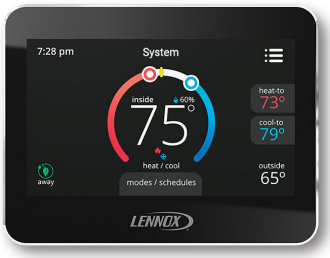

- Offers enhanced capabilities including humidification / dehumidification / dewpoint measurement and control, Humiditrol® control, and equipment maintenance reminders
- Easy to read 4.3 in. color touchscreen (measured diagonally)
- LCD display with backlight shows the current and set temperature, time, inside relative humidity, system status (operating mode and schedules) and outside temperature (optional outdoor sensor required)
- Smooth Setback Recovery starts system early to achieve setpoint at start of program period
- Compressor short-cycle protection (5 minutes)
- Up to four separate schedules are available plus Schedule IQ™
- One-Touch Away Mode - A quick and easy way to set the cooling and heating setpoints while away
- Smart Away™ - Uses geo-fencing technology to determine when the homeowner is within a predetermined distance from the home to operate the system when leaving, away and arriving
- Wi-Fi remote monitoring and adjustment through a home wireless network for desktop PCs, laptops and apps for smartphones or tablets
- Smart home automation compatible with Amazon Alexa®, Google Assistant and IFTTT
- Service Dashboard features online real-time monitoring of installed thermostats

NOTE - See the Lennox® M30 Smart Wi-Fi Thermostat Product Specifications bulletin for more information.

Remote Outdoor Temperature Sensor

- Used with the Lennox® M30 Smart Wi-Fi Thermostat
- Outdoor sensor allows thermostat to display outdoor temperature
- Automatically detected when connected to thermostat

NOTE - Sensor is required for the Enhanced Dehumidification Accessory (EDA)

Thermostat

- Thermostat is not furnished with unit
- Lennox Price Book for selection

Transformer (75VA)

- Recommended when furnace is used with zoning or defrost thermostats and other 24V accessories requiring a higher VA rating
- Circuit breaker (furnished) is wired in series
- Replaces the standard 40VA transformer

FEATURES

BLOWER

7 Variable Speed Direct Drive Blower
- Each blower assembly statically and dynamically balanced
- Blower assembly easily removed for servicing

Variable Speed Blower Motor
- Variable speed motor maintains specified air volume from 0 though 0.8 in. w.g. (heating) and 0 through 1.0 in. w.g. (Cooling) static range
- Variable speed operation is achieved by the use of an ECM (Electronically Commutated Motor) motor
- Motor is controlled by furnace control
- Change in blower speed is easily accomplished by simple jumper change on the furnace control
- During start-up the blower motor slowly ramps up to normal operating speed to minimize noise and increase comfort
- At the end of a cooling or heating cycle the motor slowly ramps down after a short blower "off" delay
- If continuous blower operation has been selected, the variable speed motor will slowly ramp down until it reaches the airflow for that condition
- Motor is resiliently mounted
- See Blower Data tables

CABINET

- Low-profile, narrow width cabinet allows easy installation
- Heavy-gauge, cold rolled steel construction
- Pre-painted cabinet finish
- Flanges provided on supply air opening for ease of plenum connection or alignment with indoor coil
- 8 Insulated with foil faced insulation on sides and back of heating compartment
- Sealed blower compartment
- Cabinet door can be removed without any tools
- Complete service access
- 9 Safety interlock switch automatically shuts off power to unit when blower compartment access door is removed
- 10 Gas piping and electrical inlets are provided in both sides of cabinet

Coil Match-Up
- All Lennox downflow indoor coils will physically match the furnace supply air opening with the same letter designation (A, B, C, D) as in the furnace model number

Low Leakage Cabinet
- All models have less than 2% air leakage and meet ANSI/ASHRAE Standard 193-2010 "Method of Test for Determining the Air Tightness of HVAC Equipment"

Optional Accessories

Condensate Drain Heat Cable Kits
- Self-limiting wattage heat cable prevents condensate drain from freezing in unconditioned areas
- Available in 6 or 24 ft. lengths

Crawl Space Vent Drain Kit
- Allows venting through a crawl space for downflow applications
- Includes 2 or 3 in. sanitary tee, 2 in. PVC assembly, PVC boot and clamp
- Kit for Canada is certified to ULC S636

Downflow Combustible Flooring Base
- Required for heating only units installed on combustible floors
- Not required in add-on cooling applications
- See Dimension Drawing

FILTER (not furnished)

- Filter and provisions for external mounting must be field provided

Optional Accessories

Downflow Filter Cabinet
- Filter cabinet mounts directly on top of furnace
- "B and "C" width cabinets have two filters
- Filter rails are furnished
- Front access for servicing
- Cleanable filter(s) are furnished

REFRIGERATION DETECTION SYSTEM (RDS)

Optional Accessories

Refrigerant Detection System (RDS) Coil Sensor Kit

- Complies with UL 60335-2-40 approved standard
- Required for field installation for all systems using R-454B refrigerant if sensor is not furnished with coil
- Consists of Refrigerant Detection System (RDS) sensor, lineset sleeves, mounting brackets and A2L labeling
- Sensor ensures safe operation for systems equipped with R-454B refrigerant
- Sensor will detect anu R-454B refrigerant

Refrigerant Detection System (RDS) Blower Control Board

Communicating Blower Control Board (Universal)

- Communicating Blower Control Board and Sensor can be used universally with any Lennox® communicating furnace or any non-communicating 24 volt furnace

Non-Communicating Blower Control Board

- Non-Communicating Blower Control Board and Sensor can be used with any non-communicating 24 volt furnace

Standard Features

- Complies with UL 60335-2-40 approved standard
- Required for all systems using R-454B refrigerant
- Connects to the RDS sensor furnished with the RDS Coil Sensor Kit
- Supports up to two RDS Sensors (factory setting)
- Used as an interface between indoor unit and thermostat to control system
- Ensures safe operation for systems equipped with R-454B refrigerant
- If R-454B refrigerant is detected, the refrigerant detection system will stop compressor and/or heating operating and operate the blower to reduce concentrations in the conditioned space
- Once safe levels are reached the HVAC system will resume normal operation
- Multi-color LED for system status and as an aid in troubleshooting
  - Flashing LED codes for system status (Green/Blue) and diagnosing Sensor errors (Red)
- Alarm relay can trigger an external alarm if R-454B refrigerant is detected
- Zone relay opens all zone dampers (if part of a zoning system) if R-454B refrigerant is detected
- Power is disabled to non-communicating thermostats to prevent demand if R-454B refrigerant is detected
- On system start-up blower will run for five minutes and any thermostat demands are disabled
- Dimensions (H x W x D): 7-7/16 x 7-7/16 x 2-1/2 (189 x 189 x 127 mm)

NOTE - See Refrigerant Detection System (RDS) Components Table on page 13.

See the CK40 Indoor Coil Product Specifications bulletins for more information.

Refer to the Installation Instructions for additional information.

SPECIFICATIONS

			Model No.	ML296DF045XV36B	ML296DF070XV48B	ML296DF090XV60C
Gas Heating Performance			AHRI Reference No.	202575917	202575918	202575919
			[1] AFUE	96%	96%	96%
	High Fire		Input - Btuh	44,000	66,000	88,000
			Output - Btuh	43,000	64,000	85,000
			Temperature rise range - °F	35-65	35-65	40-70
			Gas Manifold Pressure (in. w.g.) Nat. Gas / LPG/Propane	3.5 / 10.0	3.5 / 10.0	3.5 / 10.0
	Low Fire		Input - Btuh	29,000	43,000	57,000
			Output - Btuh	28,000	42,000	56,000
			Temperature rise range - °F	20 - 50	25 - 55	30 - 60
			Gas Manifold Pressure (in. w.g.) Nat. Gas / LPG/Propane	1.7 / 4.5	1.7 / 4.5	1.7 / 4.5
High static - in. w.g.			Heating	0.8	0.8	0.8
			Cooling	1.0	1.0	1.0
Connections in.			Intake / Exhaust Pipe (PVC)	2 / 2	2 / 2	2 / 2
			Gas pipe size IPS	1/2	1/2	1/2
			Condensate Drain Trap (PVC pipe) - i.d.	3/4	3/4	3/4
			with furnished 90° street elbow	3/4 slip x 3/4 Mipt	3/4 slip x 3/4 Mipt	3/4 slip x 3/4 Mipt
			with field supplied (PVC coupling) - o.d.	3/4 slip x 3/4 MPT	3/4 slip x 3/4 MPT	3/4 slip x 3/4 MPT
Indoor Blower			Wheel nom. diameter x width - in.	10 x 9	11 x10	11 x 11
			Motor output - hp	1/2	3/4	1.0
			Tons of add-on cooling	3	4	5
			Air Volume Range - cfm	545 - 1360	575 - 1800	753 - 1982
Electrical Data			Voltage	120 volts - 60 hertz - 1 phase		
			Blower motor full load amps	7.7	10.1	12.8
			Maximum overcurrent protection	15	20	20
Shipping Data			lbs. - 1 package	131	138	166

NOTE - Filters and provisions for mounting are not furnished and must be field provided.

[1] Annual Fuel Utilization Efficiency based on DOE test procedures and according to FTC labeling regulations. Isolated combustion system rating for non-weatherized furnaces.

INSTALLATION CLEARANCES

Sides	[1] 0 inches (0 mm)
Rear	0 inches (0 mm)
Top/Plenum	1 inch (25 mm)
Front	0 inches (0 mm)
Front (service/alcove)	24 inches (610 mm)
Floor	[2] Combustible

NOTE - Air for combustion must conform to the methods outlined in the National Fuel Gas Code (NFPA 54/ ANSI-Z223.1) or the National Standard of Canada CAN/CSA-B149.1 “Natural Gas and Propane Installation Code”.

NOTE - In the U.S. flue sizing must conform to the methods outlined in the current National Fuel Gas Code (NFPA 54/ANSI-Z223.1) or applicable provisions of local building codes. In Canada flue sizing must conform to the methods outlined in National Standard of Canada CAN/CSA-B149.1.

[1] Allow proper clearances to accommodate condensate trap and vent pipe installation.

[2] Clearance for installation on combustible floor if Optional Downflow Combustible Flooring Base is installed between furnace and combustible floor. Not required in add-on cooling applications if installed in accordance with local codes or National Fuel Gas Code ANSI-Z223.1 or CAN/CGA-149.1,.2. Do not install the furnace directly on carpeting, tile, or other combustible materials other than wood flooring.

OPTIONAL ACCESSORIES

NOTE - FURNACES CANNOT BE TWINNED!

			"B" Width Models	"C" Width Models
CABINET ACCESSORIES				
Downflow Combustible Flooring Base			**11M60**	**11M61**
CONDENSATE DRAIN KITS				
Condensate Drain Heat Cable		6 ft.	**26K68**	**26K68**
		24 ft.	**26K69**	**26K69**
Crawl Space Vent Drain Kit		US	**51W18**	**51W18**
		Canada	**15Z70**	**15Z70**
CONTROLS				
M30 Smart Wi-Fi Thermostat			**15Z69**	**15Z69**
Remote Outdoor Temperature Sensor			**X2658**	**X2658**
Transformer (75VA)			**27J32**	**27J32**
FILTERS				
[1] Downflow Filter Cabinet			**51W07**	**51W08**
		No. and Size of filter - in.	(2) 16 x 20 x 1	(2) 16 x 20 x 1
TERMINATION KITS				
See Installation Instructions for specific venting information.				
Direct Vent	Concentric	US - 2 in.	**71M80**	**69M29**
		3 in.	**- - -**	**60L46**
		Canada - 2 in.	**44W92**	**44W92**
		3 in.	**- - -**	**44W93**
	Flush-Mount	US - 2, 2-1/2 or 3 in.	**51W11**	**51W11**
		Canada - 2, 2-1/2 or 3 in.	**51W12**	**51W12**
	Wall - Close Couple	US - 2 in.	**22G44**	**- - -**
		3 in.	**44J40**	**44J40**
		Canada - 2 in.	**30G28**	**- - -**
		3 in.	**81J20**	**81J20**
	Roof Termination Flashing Kit (no vent pipe - 2 flashings)	2 in.	**15F75**	**15F75**
		3 in.	**44J41**	**44J41**
VENTING				
Flue Coupling		2 in.	**17H92**	**17H92**
[2] Left Side Vent Kit		2 or 3 in.	**87W73**	**87W73**

[1] Cleanable polyurethane, frame-type filter.

[2] NOTE - The curved exhaust pipe furnished with the Left Side Vent Kit counts as one additional 2 in. diameter 90° elbow. When using 3 in. diameter pipe, the furnished curved exhaust pipe and field provided fittings to transition from 2 in. to 3 in. count as 20 feet of equivalent pipe on all units.

NOTE - Termination Kits (**44W92**, **44W93**, **30G28**, **51W12**, **81J20**) and Crawl Space Vent Drain Kit (**15Z70**) are certified to ULC S636 standard for use in Canada only.

OUTDOOR TERMINATION KIT USAGE

Input Size	Vent Pipe Diameter (in.)	Standard Terminations				Concentric Terminations		
		Flush Mount Kit	Wall Kit		Field Fabricated Exhaust Accelerator Size Required	Concentric Kit		
			2 inch	3 inch		1-1/2 inch	2 inch	3 inch
		51W11 (US) [5] 51W12 (CA)	22G44 (US) [5] 30G28 (CA)	44J40 (US) [5] 81J20 (CA)		71M80 (US) [5] 44W92 (CA)	69M29 (US) [5] 44W92 (CA)	60L46 (US) [5] 44W93 (CA)
045	[1] 1-1/2	[4] YES	YES	[2] YES	1-1/2 in.	[3] YES	- - -	- - -
	2	[4] YES	YES	[2] YES	1-1/2 in.	[3] YES	- - -	- - -
	2-1/2	[4] YES	YES	[2] YES	1-1/2 in.	[3] YES	- - -	- - -
	3	[4] YES	YES	[2] YES	1-1/2 in.	[3] YES	- - -	- - -
070	[1] 1-1/2	[4] YES	YES	[2] YES	1-1/2 in.	[3] YES	- - -	- - -
	2	[4] YES	YES	[2] YES	1-1/2 in.	[3] YES	- - -	- - -
	2-1/2	[4] YES	YES	[2] YES	1-1/2 in.	[3] YES	- - -	- - -
	3	[4] YES	YES	[2] YES	1-1/2 in.	[3] YES	- - -	- - -
090	2	[4] YES	- - -	YES	2 in.	- - -	YES	YES
	2-1/2	[4] YES	- - -	YES	2 in.	- - -	YES	YES
	3	[4] YES	- - -	YES	2 in.	- - -	YES	YES

NOTE - Standard Terminations do not include any vent pipe or elbows external to the structure.
Any vent pipe or elbows external to the structure must be included in total vent length calculations. See Vent Length Tables.

[1] 2 inch to 1-1/2 inch reducer required, must be field provided.

[2] Requires field provided 1-1/2 in. outdoor exhaust accelerator.

[3] Concentric Kits **71M80** and **44W92** include 1-1/2 in. outdoor exhaust accelerator, required when used with 030, 045 and 070 input models. Accelerator is not used with 090 or 110 input models. When using 1-1/2 in. piping, the pipe must be transitioned to 2 in. pipe when used with the Concentric Kit.

[4] Flush Mount Kit **51W11** and **51W12** includes 1-1/2 in. outdoor exhaust accelerator, required when used with 030, 045, 070 and 090 input models. Accelerator is not used with 110 input models. When using 1-1/2 in. piping, the pipe must be transitioned to 2 in. pipe when used with the Flush Mount Kit.

[5] Termination Kits **30G28**, **44W92**, **44W93**, **51W12** and **81J20** are certified to ULC S636 standard for use in Canada only.

VENT LENGTHS - UNINSULATED EXHAUST PIPE IN UNCONDITIONED SPACE

[1] Winter Design Temperatures	Vent Pipe Diameter	Unit Input Size					
		045		070		090	
		[2] Maximum Uninsulated Exhaust Vent Length (ft.)					
		PVC	PolyPro InnoFlue	PVC	PolyPro InnoFlue	PVC	PolyPro InnoFlue
32 to 21°F	1-1/2 in.	22	N/A	20	N/A	N/A	N/A
	2 in.	21	18	33	30	46	42
	2-1/2 in.	16	N/A	26	N/A	37	N/A
	3 in.	12	12	21	21	30	30
20 to 1°F	1-1/2 in.	12	N/A	20	N/A	N/A	N/A
	2 in.	11	9	19	17	28	25
	2-1/2 in.	7	N/A	14	N/A	21	N/A
	3 in.	N/A	N/A	9	9	16	16
0 to –20°F	1-1/2 in.	8	N/A	13	N/A	N/A	N/A
	2 in.	6	4	12	10	19	16
	2-1/2 in.	N/A	N/A	7	N/A	13	N/A
	3 in.	N/A	N/A	N/A	N/A	8	8

NOTE - Concentric terminations are equivalent to 5 ft. of straight pipe and should be included when measuring total pipe length.

[1] Refer to 99% Minimum Design Temperature table provided in the current edition of ASHRAE Handbook-Fundamentals.

[2] Maximum Equivalent Vent Length permitted is defined as Total Length (linear feet) of vent pipe, plus equivalent length (ft.) of fittings, plus equivalent length (ft.) of termination.

VENTING NOTES - Concentric Terminations are equivalent to 5 ft. of straight pipe and should be included when measuring total pipe length.
One 90° elbow is equivalent to 5 feet of straight vent pipe.
Two 45° elbows are equal to one 90° elbow.
One 45° elbow is equivalent to 2.5 feet of straight vent pipe.

PolyPro® poly-propylene vent pipe is a registered trademark of DuraVent®.

Innoflue® is a registered trademark of Centrotherm Eco Systems.

VENT LENGTHS - FEET

STANDARD TERMINATION AT ELEVATION 0 - 4500 ft.

	Pipe Size	1-1/2 in.			2 in.			2-1/2 in.			3 in.		
	Input	045	070	090	045	070	090	045	070	090	045	070	090
No. of 90 ELL	1	20	15	N/A	71	56	34	105	105	83	128	127	108
	2	15	10	N/A	66	51	29	100	100	78	123	122	103
	3	10	N/A	N/A	61	46	24	95	95	73	118	117	98
	4	N/A	N/A	N/A	56	41	19	90	90	68	113	112	93
	5	N/A	N/A	N/A	51	36	14	85	85	63	108	107	88
	6	N/A	N/A	N/A	46	31	9	80	80	58	101	102	83
	7	N/A	N/A	N/A	41	26	4	75	75	53	98	97	78
	8	N/A	N/A	N/A	36	21	N/A	70	70	48	93	92	73
	9	N/A	N/A	N/A	31	16	N/A	65	65	43	88	87	68
	10	N/A	N/A	N/A	26	11	N/A	60	60	38	83	82	63

STANDARD TERMINATION ELEVATION 4501 - 10,000 ft.

	Pipe Size	1-1/2 in.			2 in.			2-1/2 in.			3 in.		
	Input	045	070	090	045	070	090	045	070	090	045	070	090
No. of 90 ELL	1	20	15	N/A	71	56	34	105	105	83	128	127	108
	2	15	10	N/A	66	51	29	100	100	78	123	122	103
	3	10	N/A	N/A	61	46	24	95	95	73	118	117	98
	4	N/A	N/A	N/A	56	41	19	90	90	68	113	112	93
	5	N/A	N/A	N/A	51	36	14	85	85	63	108	107	88
	6	N/A	N/A	N/A	46	31	9	80	80	58	103	102	83
	7	N/A	N/A	N/A	41	26	4	75	75	53	98	97	78
	8	N/A	N/A	N/A	36	21	N/A	70	70	48	93	92	73
	9	N/A	N/A	N/A	31	16	N/A	65	65	43	88	87	68
	10	N/A	N/A	N/A	26	11	N/A	60	60	38	83	82	63

CONCENTRIC TERMINATION AT ELEVATION 0 - 4500 ft.

	Pipe Size	1-1/2 in.			2 in.			2-1/2 in.			3 in.		
	Input	045	070	090	045	070	090	045	070	090	045	070	090
No. of 90 ELL	1	15	10	N/A	63	48	32	95	95	79	111	111	104
	2	10	N/A	N/A	58	43	27	90	90	74	106	106	99
	3	N/A	N/A	N/A	53	38	22	85	85	69	101	91	94
	4	N/A	N/A	N/A	48	33	17	80	80	64	96	96	89
	5	N/A	N/A	N/A	43	28	12	75	75	59	91	91	84
	6	N/A	N/A	N/A	38	23	7	70	70	54	96	86	79
	7	N/A	N/A	N/A	33	18	2	65	65	49	81	81	74
	8	N/A	N/A	N/A	28	13	N/A	60	60	44	76	76	69
	9	N/A	N/A	N/A	23	8	N/A	55	55	39	71	71	64
	10	N/A	N/A	N/A	18	3	N/A	50	50	34	66	66	59

CONCENTRIC TERMINATION ELEVATION 4501 - 10,000 ft.

	Pipe Size	1-1/2 in.			2 in.			2-1/2 in.			3 in.		
	Input	045	070	090	045	070	090	045	070	090	045	070	090
No. of 90 ELL	1	15	10	N/A	63	48	32	95	95	79	111	111	104
	2	10	N/A	N/A	58	43	27	90	90	74	106	106	99
	3	N/A	N/A	N/A	53	38	22	85	85	69	101	101	94
	4	N/A	N/A	N/A	48	33	17	80	80	64	96	96	89
	5	N/A	N/A	N/A	43	28	12	75	75	59	91	91	84
	6	N/A	N/A	N/A	38	23	7	70	70	54	86	86	79
	7	N/A	N/A	N/A	33	18	2	65	65	49	81	81	74
	8	N/A	N/A	N/A	28	13	N/A	60	60	44	76	76	69
	9	N/A	N/A	N/A	23	8	N/A	55	55	39	71	71	64
	10	N/A	N/A	N/A	18	3	N/A	50	50	34	66	66	59

VENT LENGTHS - EXHAUST USING VENTILATED ATTIC/CRAWLSPACE INTAKE AIR

STANDARD TERMINATION AT ELEVATION 0 - 10,000 ft.

Pipe Size		1-1/2 in.			2 in.			2-1/2 in.			3 in.		
Input		045	070	090	045	070	090	045	070	090	045	070	090
No. of 90 ELL	1	15	10	N/A	61	46	24	90	90	68	108	107	88
	2	10	N/A	N/A	56	41	19	85	85	63	103	102	83
	3	N/A	N/A	N/A	51	36	14	80	80	58	98	97	78
	4	N/A	N/A	N/A	46	31	9	85	75	63	93	92	73
	5	N/A	N/A	N/A	41	26	4	70	70	48	88	87	68
	6	N/A	N/A	N/A	36	21	N/A	65	65	43	83	82	63
	7	N/A	N/A	N/A	31	16	N/A	60	60	38	78	77	58
	8	N/A	N/A	N/A	26	11	N/A	55	55	33	73	72	53
	9	N/A	N/A	N/A	21	6	N/A	50	50	28	68	67	48
	10	N/A	N/A	N/A	16	1	N/A	45	45	23	63	62	43

GAS HEAT ACCESSORIES

Input	High Altitude Pressure Switch Kit		Natural Gas to LPG/Propane Kit	LPG/Propane to Natural Gas Kit	Natural Gas High Altitude Orifice Kit	LPG/Propane High Altitude Orifice Kit	Muffler (US Only)
	4501 - 7500 ft.	7501 - 10,000 ft.	0 - 7500 ft.	0 - 7500 ft.	7501- 10,000 ft.	7501- 10,000 ft.	
045	**14A47**	**14A50**	**11K51**	**77W09**	**73W37**	**11K46**	**15Y66 (2-inch)**
070	**14A55**	**14A56**	**11K51**	**77W09**	**73W37**	**11K46**	**15Y66 (2-inch)**
090	**14A54**	**14A53**	**11K51**	**77W09**	**73W37**	**11K46**	**15Y66 (2-inch)**

REFRIGERANT DETECTION SYSTEM (RDS) COMPONENTS

Description		Order No.
Refrigerant Detection System (RDS) Coil Sensor Kit		**26Z69**
Refrigerant Detection System (RDS) Blower Control Board	Any Lennox® Communicating Furnace or any Non-Communicating 24V Furnace (Universal)	**27A03**
	Any Non-Communicating 24V Furnace	**27A02**

NOTE - Communicating Blower Control Board and Sensor can be used universally with Lennox® communicating furnace or any non-communicating 24 volt furnace.
Non-Communicating Blower Control Board and Sensor can be used with any non-communicating 24 volt furnace.

HIGH ALTITUDE DERATE

NOTE - Units may be installed at altitudes up to 10,000 ft.
At altitudes above 4501 ft. the unit must be derated to match the manifold pressure information shown below.
Units installed at altitudes of 4501 to 10,000 ft. require a pressure switch change.
Units installed at altitudes of 7501 to 10,000 ft. require an orifice change.
See the Gas Heat Accessories table for ordering information.

NOTE - This is the only permissible derate for these units.

NOTE - In Canada, certification for installations at elevations over 4500 feet is the jurisdiction of local authorities.

Input	Gas	Manifold Pressure in. w.g.										Supply Line Pressure in. w.g. 0 - 10,000 ft.	
		0 - 4500 ft.		4501 - 5500 ft.		5501 - 6500 ft.		6501 - 7500 ft.		7501 - 10,000 ft.			
		Low Fire	High Fire	Low Fire	High Fire	Low Fire	High Fire	Low Fire	High Fire	Low Fire	High Fire	Min.	Max.
All Sizes	Natural	1.7	3.5	1.6	3.3	1.5	3.2	1.5	3.1	1.7	3.5	4.5	13.0
	LPG/Propane	4.5	10.0	4.2	9.4	4.0	9.1	3.9	8.9	4.5	10.0	11.0	13.0

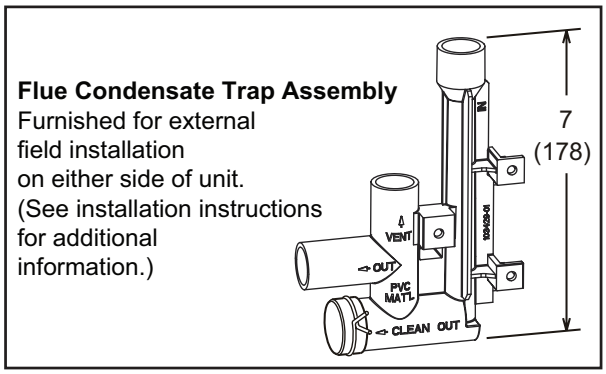

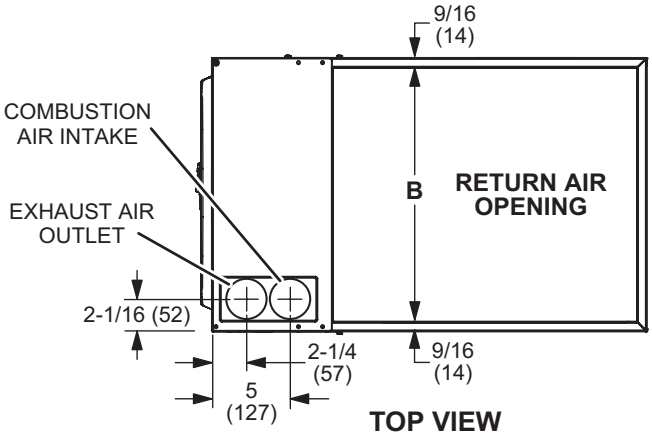

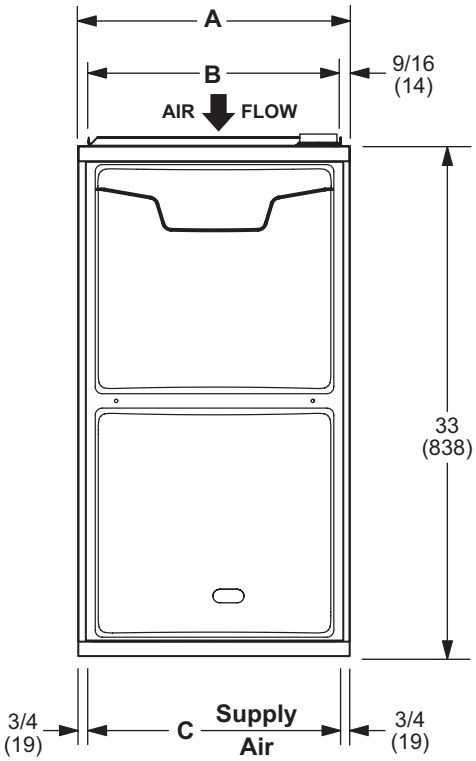

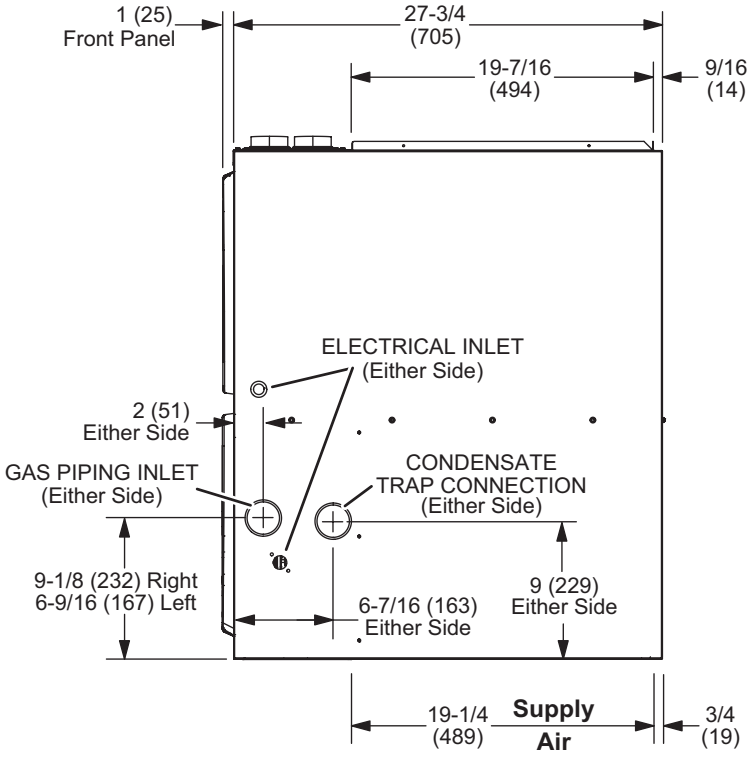

Model No.	A		B		C	
	in.	mm	in.	mm	in.	mm
ML296DF045XV36B ML296DF070XV48B	17-1/2	446	16-3/8	416	16	406
ML296DF090XV60C	21	533	19-7/8	505	19-1/2	495

DOWNFLOW FILTER CABINET

"B AND "C" WIDTH FURNACES
(Two Filters)

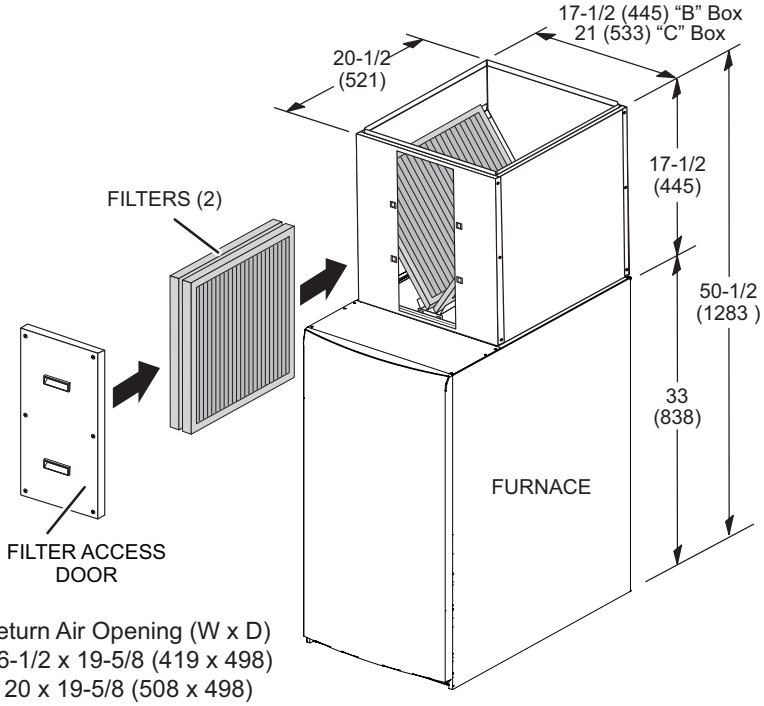

NOTE: Return Air Opening (W x D)
"B" Box 16-1/2 x 19-5/8 (419 x 498)
"C" Box 20 x 19-5/8 (508 x 498)

DOWNFLOW COMBUSTIBLE FLOORING BASE

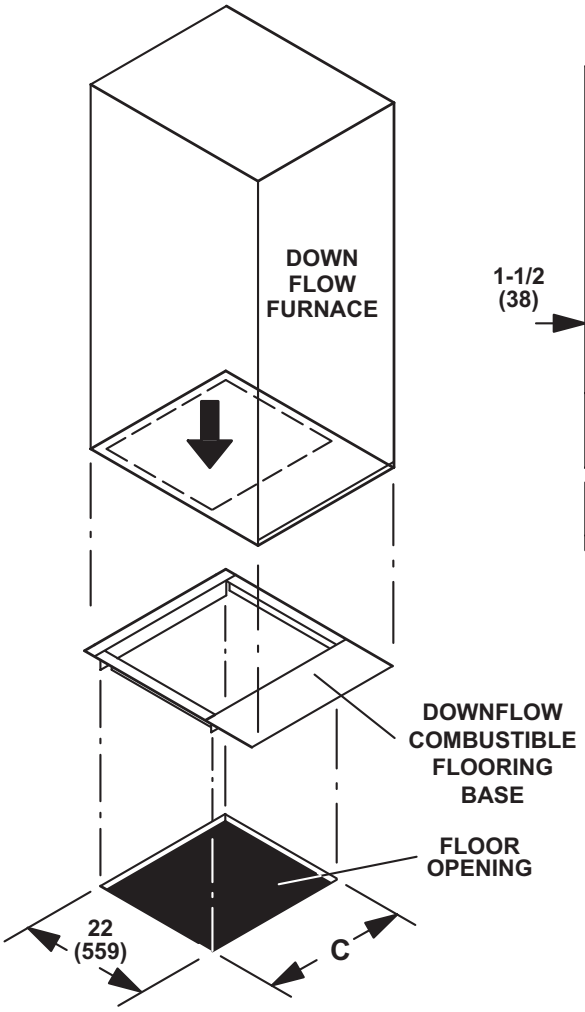

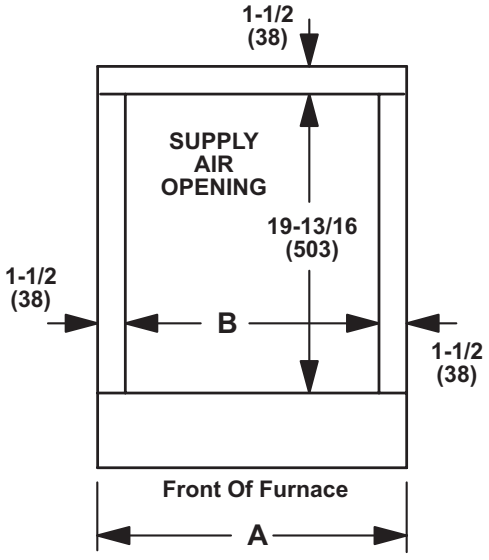

TOP VIEW

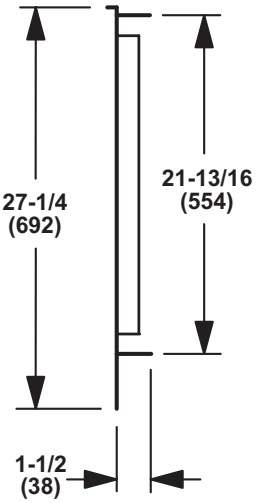

SIDE VIEW

Cabinet Width	Catalog Number	A		B		C	
		in.	mm	in.	mm	in.	mm
B	11M60	19-9/16	497	16-9/16	421	18-3/4	476
C	11M61	23-1/16	586	20-1/16	510	22-1/4	565

Model		Coil/Furnace Width		Coil Height		Overall Height	
CK40DT	**CRX35**	**in.**	**mm**	**in.**	**mm**	**in.**	**mm**
CK40DT-24B	CRX35-24B	17-1/2	445	18	457	51	1295
CK40DT-30/36B	CRX35-30/36B	17-1/2	445	23-1/2	597	56-1/2	1435
CK40DT-30/36C	CRX35-30/36C	21	533	23-1/2	597	56-1/2	1435
CK40DT-42B	CRX35-42B	17-1/2	445	23-1/2	597	56-1/2	1435
CK40DT-48C	CRX35-48C	21	533	27-1/2	699	60-1/2	1537
CK40CT-50/60C	CRX35-50/60C	21	533	27-1/2	699	60-1/2	1537

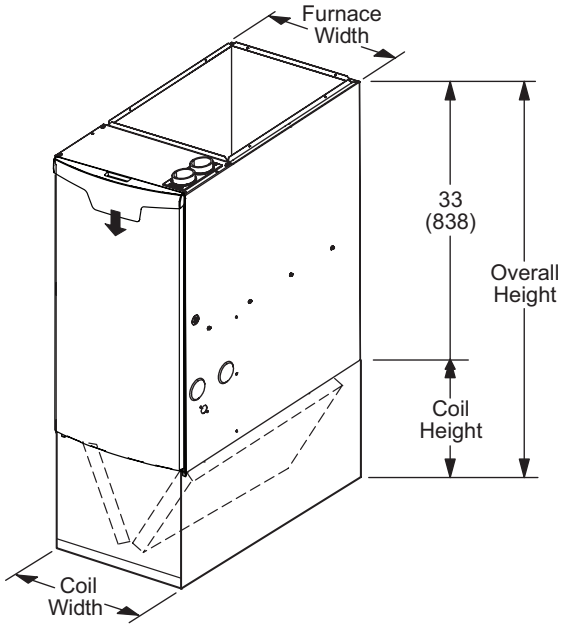

FLUSH-MOUNT VENT TERMINATION KIT 51W11 (US) or 51W12 (CANADA)

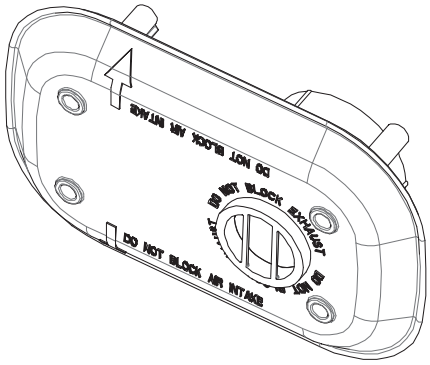

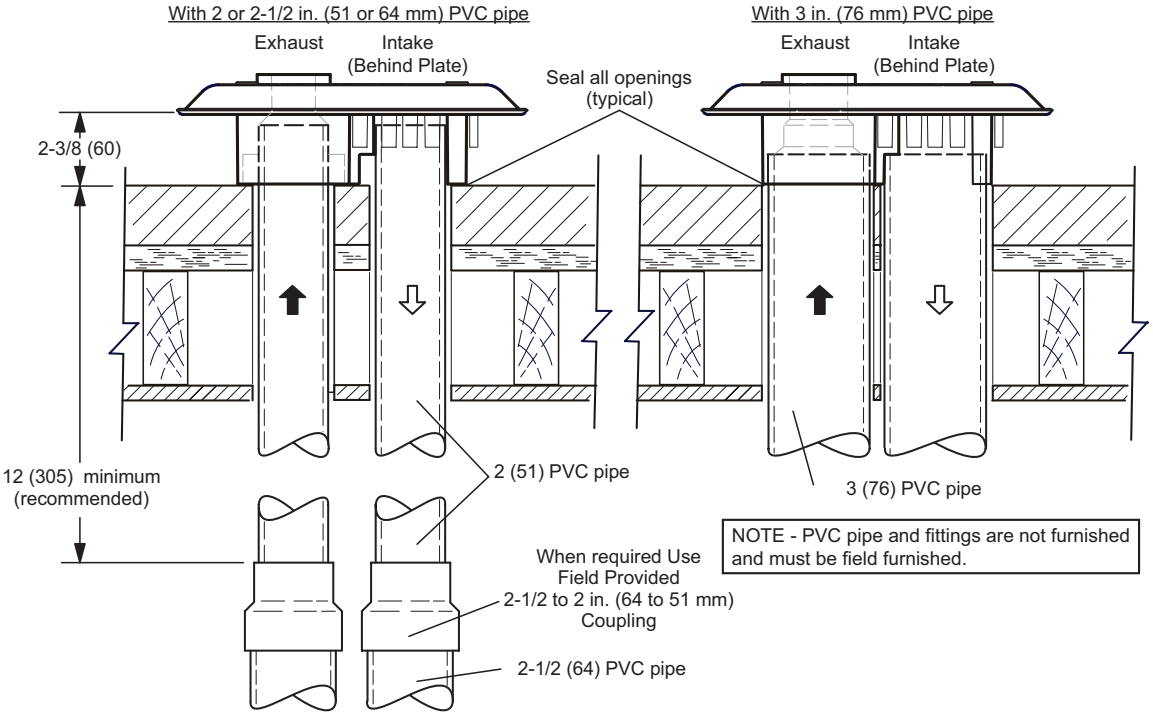

NOTE - PVC pipe and fittings are not furnished and must be field furnished.

MUFFLERS
15Y66 - 2-inch
16A56 - 3-inch

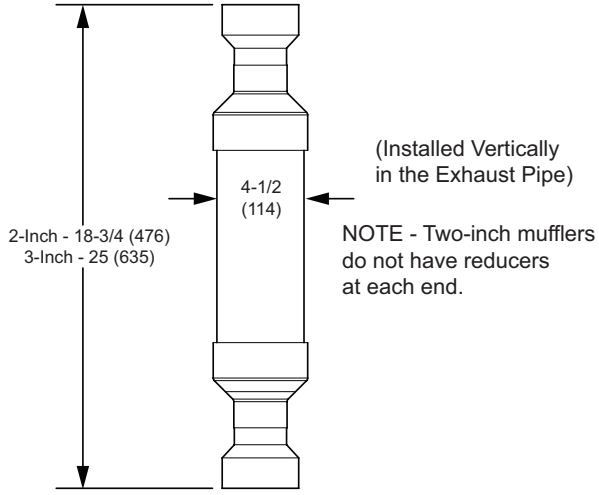

(Installed Vertically in the Exhaust Pipe)

NOTE - Two-inch mufflers do not have reducers at each end.

CONCENTRIC WALL TERMINATION APPLICATIONS

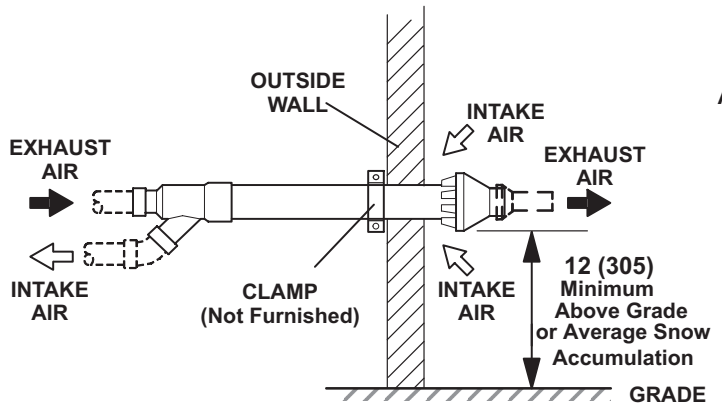

CONCENTRIC ROOF TERMINATION APPLICATIONS

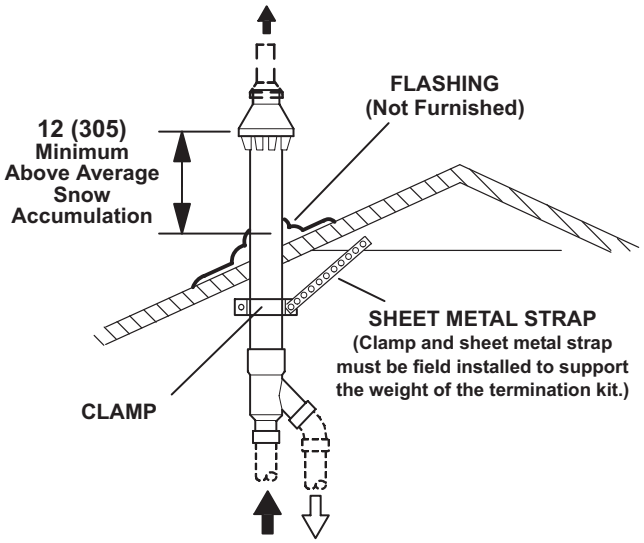

71M80 / 69M29 / 44W92 − 2 inch kits
60L46 / 44W93 − 3 inch kits
See Installation Instructions for additional information.

Note - Field provided reducer may be required to adapt different vent pipe sizes to termination.

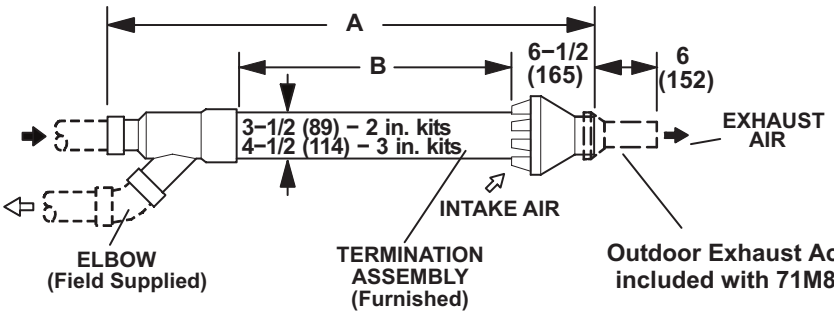

Cat. No.	A		B	
	in.	mm	in.	mm
71M80 69M29	33−3/8	848	16−3/4	425
44W92 (Canada)	29	737	15−1/2	394
60L46	38−7/8	987	21−3/16	538
44W93 (Canada)	36−1/8	918	19−1/2	495

NOTE − Typical illustration for dimensions only. Design may vary depending on kit ordered.

WALL TERMINATION KITS (CLOSE-COUPLE)
EXTENDED VENT FOR GRADE CLEARANCE
2 inch (51 mm) 22G44 (US)
3 inch (76 mm) 44J40 (US)
See Installation Instructions for additional information.

Note - Field provided reducer may be required to adapt different vent pipe sizes to termination.

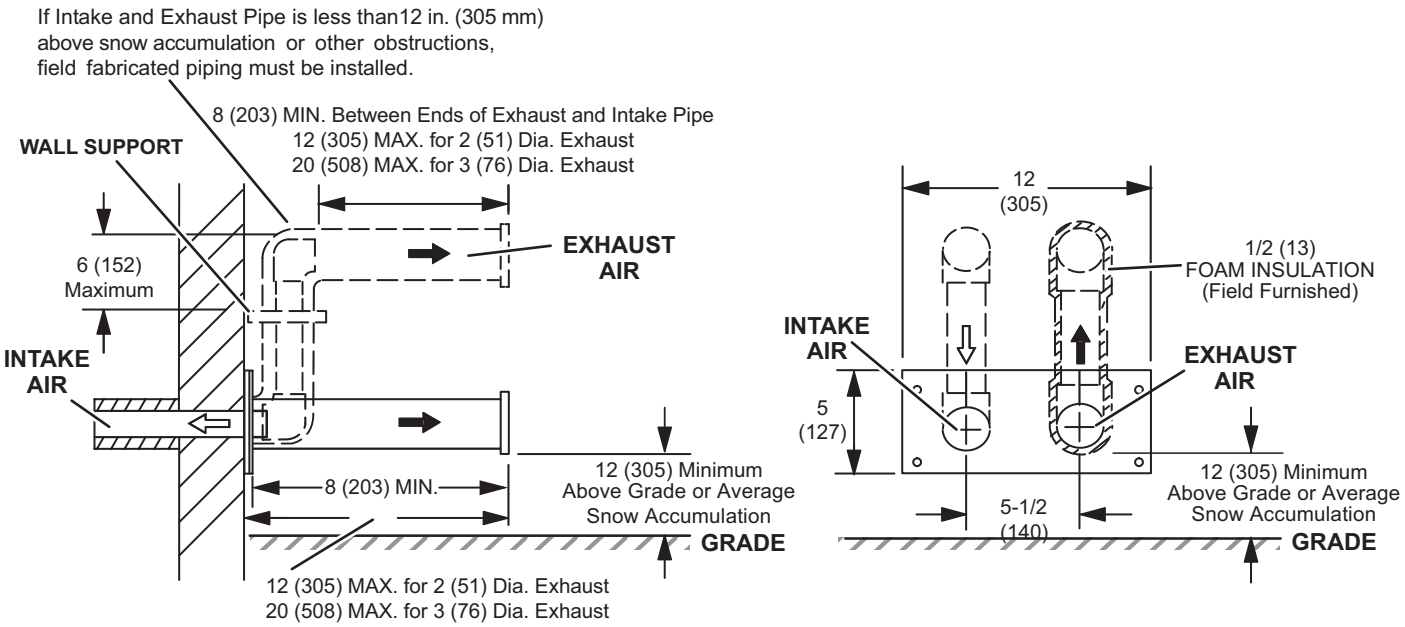

WALL TERMINATION KITS (CLOSE-COUPLE)
EXTENDED VENT FOR GRADE CLEARANCE
2 inch (51 mm) 30G28 (WTK Canada)
3 inch (76 mm) 81J20 (WTK Canada)
See Installation Instructions for additional information.

Note - Field provided reducer may be required to adapt different vent pipe sizes to termination.

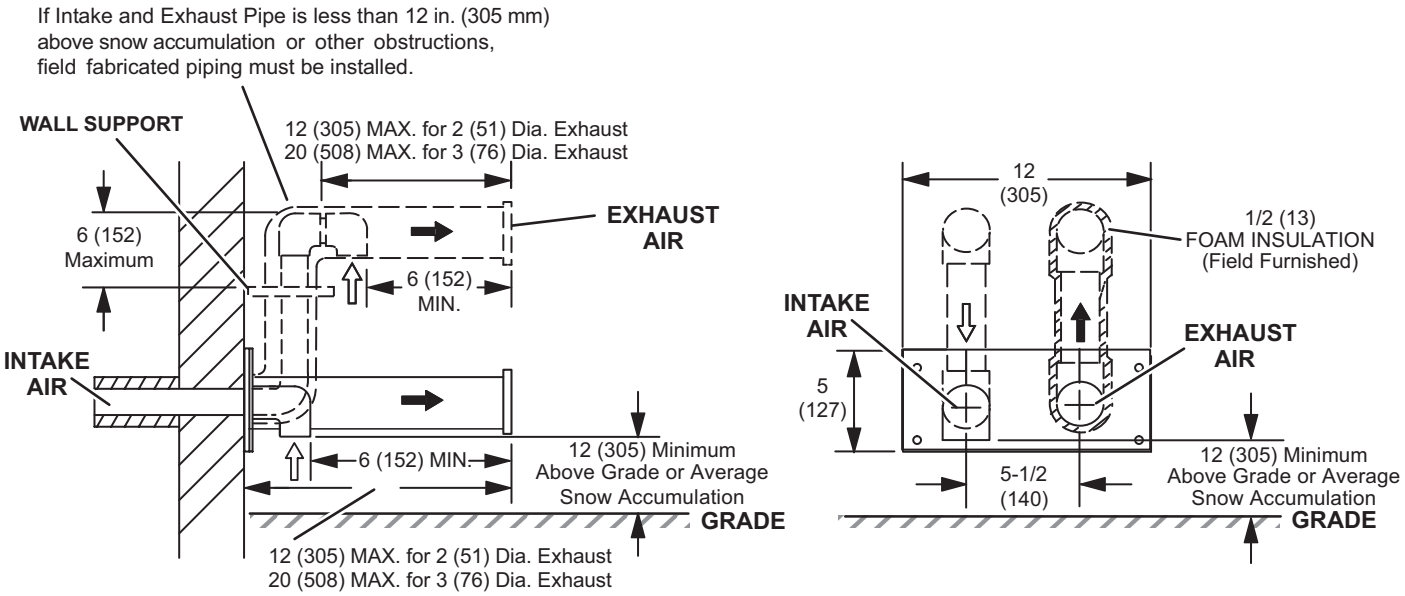

BLOWER DATA

ML296DF045XV36B BLOWER PERFORMANCE (less filter)

0 through 0.8 in. w.g. (Heating) and 0 through 1.0 in. w.g. (Cooling) External Static Pressure Range

"ADJUST" Switch Positions	Speed Switch Positions							
	Second Stage "HEAT" Speed - cfm				Second Stage "COOL" Speed - cfm			
	D	C	[1] B	A	D	C	B	[1] A
+	770	860	945	1045	915	1100	1200	1320
[1] NORM	710	780	860	960	845	1010	1110	1215
—	635	710	775	855	750	905	995	1100
"ADJUST" Switch Positions	First Stage "HEAT" Speed - cfm				First Stage "COOL" Speed - cfm			
	D	C	[1] B	A	D	C	B	[1] A
+	700	760	855	940	625	785	860	965
[1] NORM	645	690	775	855	585	710	770	870
—	590	630	700	765	545	660	705	780

[1] Factory default jumper setting.

NOTES - The effect of static pressure is included in air volumes shown.
First stage HEAT is approximately **91%** of the same second stage HEAT speed position.
First stage COOL (two-stage air conditioning units only) is approximately **70%** of the same second stage COOL speed position.
Continuous Fan Only speed is approximately **38%** of the same second stage COOL speed position.
Lennox® LZSV Variable Zoning System Applications - Minimum blower speed is 300 cfm.

ML296DF045XV36B BLOWER MOTOR WATTS (COOLING)

Jumper Speed Positions		Motor Watts @ Various External Static Pressures - in. wg.																			
		First Stage									Second Stage										
		0	0.1	0.2	0.3	0.4	0.5	0.6	0.7	0.8	0	0.1	0.2	0.3	0.4	0.5	0.6	0.7	0.8	0.9	1.0
"+" (Plus) SETTING ("Adjust" Jumper at "+" Setting)																					
"COOL" Speed	Tap D	38	61	83	98	121	145	166	191	212	108	134	156	184	208	238	261	281	305	325	350
	Tap C	69	91	120	144	166	192	212	233	250	178	210	231	262	293	316	350	376	409	432	458
	Tap B	88	111	141	162	191	212	234	260	281	220	250	287	320	347	388	419	438	473	506	524
	Tap A	122	148	176	205	232	258	282	304	332	300	330	368	402	429	463	500	529	532	537	531
"NORM" (Normal) SETTING ("Adjust" Jumper at "NORM" Setting)																					
"COOL" Speed	Tap D	34	55	71	92	107	133	148	174	187	85	107	132	160	187	202	232	256	278	300	322
	Tap C	48	72	94	121	148	164	185	208	229	146	167	198	228	256	277	300	329	357	384	398
	Tap B	63	84	116	139	158	185	196	230	250	186	208	243	280	304	330	356	381	406	438	466
	Tap A	86	112	143	168	196	222	239	267	283	242	268	302	338	364	399	417	453	476	503	526
"—" (Minus) SETTING ("Adjust" Jumper at "—" Setting)																					
"COOL" Speed	Tap D	34	51	71	86	106	123	144	161	177	57	79	105	127	153	175	196	220	239	264	283
	Tap C	35	53	82	105	123	147	168	191	207	101	121	157	182	206	234	251	283	299	332	346
	Tap B	44	66	91	120	138	159	179	200	219	133	162	185	212	239	268	294	323	348	365	388
	Tap A	61	85	114	143	164	189	207	235	252	170	200	226	255	292	316	347	377	398	424	453

BLOWER DATA

ML296DF070XV48B BLOWER PERFORMANCE (less filter)

BOTTOM RETURN AIR

0 through 0.8 in. w.g. (Heating) and 0 through 1.0 in. w.g. (Cooling) External Static Pressure Range

"ADJUST" Switch Positions	Speed Switch Positions							
	Second Stage "HEAT" Speed - cfm				Second Stage "COOL" Speed - cfm			
	D	C	[1] B	A	D	C	B	[1] A
+	1135	1300	1450	1620	1125	1360	1580	1805
[1] NORM	1025	1175	1325	1475	1020	1220	1435	1650
—	930	1060	1185	1315	920	1110	1290	1500
"ADJUST" Switch Positions	First Stage "HEAT" Speed - cfm				First Stage "COOL" Speed - cfm			
	D	C	[1] B	A	D	C	B	[1] A
+	855	945	1050	1185	770	970	1105	1275
[1] NORM	770	810	960	1085	700	850	1010	1160
—	680	725	820	970	615	755	875	1045

[1] Factory default jumper setting.

NOTES - The effect of static pressure is included in air volumes shown.
First stage HEAT is approximately **73%** of the same second stage HEAT speed position.
First stage COOL (two-stage air conditioning units only) is approximately **70%** of the same second stage COOL speed position.
Continuous Fan Only speed is approximately **38%** of the same second stage COOL speed position.
Lennox® LZSV Variable Zoning System Applications - Minimum blower speed is 380 cfm.

ML296DF070XV48B BLOWER MOTOR WATTS (COOLING)

Jumper Speed Positions		Motor Watts @ Various External Static Pressures - in. wg.																			
		First Stage									Second Stage										
		0	0.1	0.2	0.3	0.4	0.5	0.6	0.7	0.8	0	0.1	0.2	0.3	0.4	0.5	0.6	0.7	0.8	0.9	1.0
"+" (Plus) SETTING ("Adjust" Jumper at "+" Setting)																					
"COOL" Speed	Tap D	57	79	102	124	147	169	194	208	237	138	166	196	224	251	286	313	339	362	389	417
	Tap C	89	118	144	175	202	228	253	273	291	241	273	305	338	368	397	425	457	490	519	548
	Tap B	136	163	196	224	251	281	307	332	356	381	417	456	492	527	553	596	626	654	695	734
	Tap A	204	233	265	290	323	353	383	414	441	560	603	648	699	735	747	744	749	737	738	736
"NORM" (Normal) SETTING ("Adjust" Jumper at "NORM" Setting)																					
"COOL" Speed	Tap D	46	66	87	106	127	145	165	186	216	108	139	159	188	221	242	275	297	315	341	364
	Tap C	65	93	114	138	169	190	215	238	266	183	211	241	269	296	325	359	387	416	439	465
	Tap B	99	127	155	185	210	237	261	293	308	290	322	356	392	421	452	486	520	552	577	616
	Tap A	158	184	211	238	263	299	326	352	376	431	469	510	545	586	618	649	682	713	734	738
"—" (Minus) SETTING ("Adjust" Jumper at "—" Setting)																					
"COOL" Speed	Tap D	37	54	74	91	109	125	148	170	194	84	111	136	165	191	212	237	260	286	312	342
	Tap C	53	75	96	119	140	161	181	206	231	129	157	190	217	245	274	304	331	355	381	404
	Tap B	73	98	123	146	171	199	223	250	276	200	233	266	302	332	358	396	424	451	481	503
	Tap A	111	138	166	197	220	245	275	296	323	324	360	390	427	461	496	522	553	588	618	650

BLOWER DATA

ML296DF090XV60C BLOWER PERFORMANCE (less filter)

BOTTOM RETURN AIR, RETURN AIR FROM BOTH SIDES OR RETURN AIR FROM BOTTOM AND ONE SIDE

0 through 0.8 in. w.g. (Heating) and 0 through 1.0 in. w.g. (Cooling) External Static Pressure Range

"ADJUST" Switch Positions	Speed Switch Positions							
	Second Stage "HEAT" Speed - cfm				Second Stage "COOL" Speed - cfm			
	D	C	[1] B	A	D	C	B	[1] A
+	1430	1555	1725	1865	1350	1550	1755	1985
[1] NORM	1300	1415	1570	1685	1240	1445	1635	1815
—	1195	1275	1415	1515	1120	1290	1455	1630
"ADJUST" Switch Positions	First Stage "HEAT" Speed - cfm				First Stage "COOL" Speed - cfm			
	D	C	[1] B	A	D	C	B	[1] A
+	1175	1275	1415	1505	985	1130	1280	1440
[1] NORM	1075	1165	1295	1375	905	1035	1180	1315
—	980	1045	1160	1240	835	940	1070	1195

[1] Factory default jumper setting.

NOTES - The effect of static pressure is included in air volumes shown.
First stage HEAT is approximately **80%** of the same second stage HEAT speed position.
First stage COOL (two-stage air conditioning units only) is approximately **70%** of the same second stage COOL speed position.
Continuous Fan Only speed is approximately **38%** of the same second stage COOL speed position.
Lennox® LZSV Variable Zoning System Applications - Minimum blower speed is 460 cfm.

ML296DF090XV60C BLOWER MOTOR WATTS (COOLING)

Jumper Speed Positions		Motor Watts @ Various External Static Pressures - in. wg.																			
		First Stage									Second Stage										
		0	0.1	0.2	0.3	0.4	0.5	0.6	0.7	0.8	0	0.1	0.2	0.3	0.4	0.5	0.6	0.7	0.8	0.9	1.0
"+" (Plus) SETTING ("Adjust" Jumper at "+" Setting)																					
"COOL" Speed	Tap D	90	113	139	156	181	206	228	248	267	208	235	264	294	321	347	372	396	430	453	483
	Tap C	127	151	178	204	222	254	275	295	324	302	334	364	396	429	454	482	516	546	580	611
	Tap B	179	205	233	255	284	310	333	368	388	430	464	504	536	576	598	640	672	703	744	768
	Tap A	245	271	302	325	349	381	409	432	464	620	659	715	764	791	819	849	896	917	944	963
"NORM" (Normal) SETTING ("Adjust" Jumper at "NORM" Setting)																					
"COOL" Speed	Tap D	72	93	116	139	158	180	202	226	244	179	203	228	250	276	300	318	353	381	400	430
	Tap C	105	128	150	174	197	218	244	265	287	258	290	312	344	374	399	423	449	474	506	536
	Tap B	138	161	189	217	241	262	288	310	340	368	392	436	456	485	513	543	574	594	631	667
	Tap A	190	216	245	269	291	324	343	372	403	466	501	547	581	617	648	686	717	749	782	808
"—" (Minus) SETTING ("Adjust" Jumper at "—" Setting)																					
"COOL" Speed	Tap D	61	80	104	125	146	164	187	202	224	134	159	182	211	233	254	279	305	326	348	375
	Tap C	81	103	126	147	168	193	217	238	257	190	213	245	269	291	318	348	378	400	427	444
	Tap B	114	137	161	182	205	230	256	273	298	261	287	322	347	372	403	428	453	489	516	544
	Tap A	148	174	199	227	249	276	298	328	353	341	375	417	449	484	514	544	573	608	639	662

REVISIONS

Sections	Description of Change
Approvals	Updated ENERGY STAR® usage.

Visit us at www.Lennox.com
For the latest technical information, www.LennoxPros.com
Contact us at 1-800-4-LENNOX

NOTE - Due to Lennox' ongoing commitment to quality, Specifications, Ratings and Dimensions subject to change without notice and without incurring liability.
Improper installation, adjustment, alteration, service or maintenance can cause property damage or personal injury.
Installation and service must be performed by a qualified installer and servicing agency.

©2026 Lennox Industries, Inc.