LENNOX

Service Literature

UNIT INFORMATION

100232

ML297DFVK(X)

ML297DFVK(X) With R-454B SERIES UNITS

ML297DFVK(X) series units are 90% efficiency gas furnaces used for downflow applications only, manufactured with Lennox Duralok heat exchangers formed of aluminized steel. ML297DFVK(X) units are available in heating capacities of 66,000 to 110,000 Btuh and cooling applications up to 5 tons. Refer to Engineering Handbook for proper sizing.

Units are factory equipped for use with natural gas. Kits are available for conversion to LPG operation. ML297DFVK(X) unit meets the California Nitrogen Oxides (NOx) Standards and California Seasonal Efficiency requirements. All units use a redundant gas valve to assure safety shut-off as required by C.S.A.

All specifications in this manual are subject to change. Procedures outlined in this manual are presented as a recommendation only and do not supersede or replace local or state codes. In the absence of local or state codes, the guidelines and procedures outlined in this manual (except where noted) are recommendations only and do not constitute code.

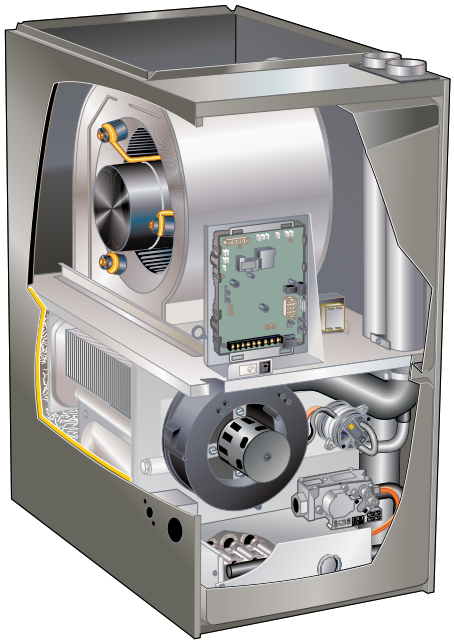

⚠ WARNING

This furnace is equipped with an ignition control factory enabled for use with Lennox A2L refrigerant systems. Disabling the refrigerant detection functionality on A2L system is prohibited by safety codes. Refer to furnace installation instructions for non-A2L and non-Lennox refrigerant system setup.

⚠ WARNING

Improper installation, adjustment, alteration, service or maintenance can cause property damage, personal injury or loss of life. Installation and service must be performed by a licensed professional HVAC installer (or equivalent), service agency or the gas supplier.

⚠ CAUTION

As with any mechanical equipment, contact with sharp sheet metal edges can result in personal injury. Take care while handling this equipment and wear gloves and protective clothing.

ELECTROSTATIC DISCHARGE (ESD)
Precautions and Procedures

⚠ CAUTION

Electrostatic discharge can affect electronic components. Take precautions to neutralize electrostatic charge by touching your hand and tools to metal prior to handling the control.

TABLE OF CONTENTS

Specifications . . . . . Page 2
Blower Data . . . . . Page 4
I Unit Components . . . . . Page 7
II Installation . . . . . Page 27
III Start Up . . . . . Page 50
IV Heating System Service Checks . . . . . Page 51
V Typical Operating Characteristics . . . . . Page 54
VI Maintenance . . . . . Page 54
VII Low GWP Application. . . . . Page 57
VIII- Diagram and DIP Switch Settings. . . . . .Page 60

SPECIFICATIONS

		Model	ML297DF070XV48BK	ML297DF090XV60CK	ML297DF110XV60CK
Gas Heating Performance		[1] AFUE	97%	97%	97%
	High Fire	Input - Btuh	66,000	88,000	110,000
		Output - Btuh	64,000	86,000	108,000
		Temperature rise range - °F	35 - 65	40 - 70	45 - 75
		Gas Manifold Pressure (in. w.g.) Nat. Gas / LPG/Propane	3.5 / 10.0	3.5 / 10.0	3.5 / 10.0
	Low Fire	Input - Btuh	43,000	57,000	72,000
		Output - Btuh	42,000	56,000	70,000
		Temperature rise range - °F	25 - 55	30 - 60	35 - 65
		Gas Manifold Pressure (in. w.g.) Nat. Gas / LPG/Propane	1.7 / 4.5	1.7 / 4.5	1.7 / 4.5
High static - in. w.g.		Heating	0.8	0.8	0.8
		Cooling	1.0	1.0	1.0
Connections		Intake / Exhaust Pipe (PVC)	2 / 2	2 / 2	2 / 2
		Gas pipe size IPS	1/2	1/2	1/2
		Condensate Drain Trap (PVC pipe) - i.d.	3/4	3/4	3/4
		with furnished 90° street elbow	3/4 slip x 3/4 MIPT	3/4 slip x 3/4 MIPT	3/4 slip x 3/4 MIPT
		with field supplied (PVC coupling) - o.d.	3/4 slip x 3/4 MPT	3/4 slip x 3/4 MPT	3/4 slip x 3/4 MPT
Indoor Blower		Wheel diameter x width - in.	11.5 x10	11 x 11	11 x 11
		Motor output - hp	3/4	1.0	1.0
		Tons of add-on cooling	4	5	5
		Air Volume Range - cfm	575 - 1800	750 - 1980	735 - 2010
Electrical Data		Voltage	120 volts - 60 hertz - 1 phase		
		Blower motor full load amps	10.1	12.8	12.8
		Maximum overcurrent protection	15	20	20
Shipping Data		lbs. - 1 package	136	152	163

NOTE - Filters and provisions for mounting are not furnished and must be field provided.

[1] Annual Fuel Utilization Efficiency based on DOE test procedures and according to FTC labeling regulations. Isolated combustion system rating for non-weatherized furnaces.

OPTIONAL ACCESSORIES

NOTE - FURNACES CANNOT BE TWINNED!

			"B" Width Models	"C" Width Models
CABINET ACCESSORIES				
Downflow Combustible Flooring Base			**11M60**	**11M61**
CONDENSATE DRAIN KITS				
Condensate Drain Heat Cable		6 ft.	**26K68**	**26K68**
		24 ft.	**26K69**	**26K69**
Crawl Space Vent Drain Kit		US	**51W18**	**51W18**
		Canada	**15Z70**	**15Z70**
CONTROLS				
Transformer (75VA)			**27J32**	**27J32**
FILTERS				
[1] Downflow Filter Cabinet			**51W07**	**51W08**
		No. and Size of filter - in.	(2) 16 x 20 x 1	(2) 16 x 20 x 1
TERMINATION KITS				
See Installation Instructions for specific venting information.				
Direct Vent	Concentric	US - 2 in.	**71M80**	**69M29**
		3 in.	**- - -**	**60L46**
		Canada - 2 in.	**44W92**	**44W92**
		3 in.	**- - -**	**44W93**
	Flush-Mount	US - 2, 2-1/2 or 3 in.	**51W11**	**51W11**
		Canada - 2, 2-1/2 or 3 in.	**51W12**	**51W12**
	Wall - Close Couple	US - 2 in.	**22G44**	**- - -**
		3 in.	**44J40**	**44J40**
		Canada - 2 in.	**30G28**	**- - -**
		3 in.	**81J20**	**81J20**
	Roof Termination Flashing Kit (no vent pipe - 2 flashings)	2 in.	**15F75**	**15F75**
		3 in.	**44J41**	**44J41**
VENTING				
Flue Coupling		2 in.	**17H92**	**17H92**
[2] Left Side Vent Kit		2 or 3 in.	**87W73**	**87W73**

[1] Cleanable polyurethane, frame-type filter.

[2] NOTE - The curved exhaust pipe furnished with the Left Side Vent Kit counts as one additional 2 in. diameter 90° elbow. When using 3 in. diameter pipe, the furnished curved exhaust pipe and field provided fittings to transition from 2 in. to 3 in. count as 20 feet of equivalent pipe on all units.

NOTE - Termination Kits (**44W92**, **44W93**, **30G28**, **51W12**, **81J20**) and Crawl Space Vent Drain Kit (**15Z70**) are certified to ULC S636 standard for use in Canada only.

BLOWER DATA

ML297DF070XV48BK BLOWER PERFORMANCE (less filter)

BOTTOM RETURN AIR

0 through 0.8 in. w.g. (Heating) and 0 through 1.0 in. w.g. (Cooling) External Static Pressure Range

"ADJUST" Switch Positions	Speed Switch Positions							
	Second Stage "HEAT" Speed - cfm				Second Stage "COOL" Speed - cfm			
	Low	Med-Low	[1] Med-High	High	Low	Med-Low	Med-High	[1] High
+	1110	1305	1430	1700	1110	1340	1575	1800
[1] NORM	995	1175	1315	1520	995	1230	1420	1650
—	880	1055	1170	1365	880	1085	1290	1460
"ADJUST" Switch Positions	First Stage "HEAT" Speed - cfm				First Stage "COOL" Speed - cfm			
	Low	Med-Low	[1] Med-High	High	Low	Med-Low	Med-High	[1] High
+	860	1020	1140	1340	740	915	1055	1255
[1] NORM	795	910	1030	1230	660	820	940	1120
—	680	825	910	1085	575	735	850	995

[1] Factory default jumper setting.

NOTES - The effect of static pressure is included in air volumes shown.
First stage HEAT is approximately **73%** of the same second stage HEAT speed position.
First stage COOL (two-stage air conditioning units only) is approximately **70%** of the same second stage COOL speed position.
Continuous Fan Only speed is approximately **38%** of the same second stage COOL speed position.
Lennox® LZSV Variable Zoning System Applications - Minimum blower speed is 380 cfm.

BLOWER DATA

ML297DF090XV60CK BLOWER PERFORMANCE (less filter)

BOTTOM RETURN AIR, RETURN AIR FROM BOTH SIDES OR RETURN AIR FROM BOTTOM AND ONE SIDE

0 through 0.8 in. w.g. (Heating) and 0 through 1.0 in. w.g. (Cooling) External Static Pressure Range

"ADJUST" Switch Positions	Speed Switch Positions							
	Second Stage "HEAT" Speed - cfm				Second Stage "COOL" Speed - cfm			
	Low	Med-Low	[1] Med-High	High	Low	Med-Low	Med-High	[1] High
+	1395	1555	1695	1825	1335	1600	1750	1980
[1] NORM	1275	1395	1585	1670	1225	1450	1630	1830
—	1145	1265	1405	1525	1120	1270	1450	1660
"ADJUST" Switch Positions	First Stage "HEAT" Speed - cfm				First Stage "COOL" Speed - cfm			
	Low	Med-Low	[1] Med-High	High	Low	Med-Low	Med-High	[1] High
+	1130	1230	1365	1475	955	1115	1265	1450
[1] NORM	1040	1130	1250	1340	855	1005	1150	1285
—	910	1025	1130	1210	750	890	1060	1170

[1] Factory default jumper setting.

NOTES - The effect of static pressure is included in air volumes shown.
First stage HEAT is approximately **80%** of the same second stage HEAT speed position.
First stage COOL (two-stage air conditioning units only) is approximately **70%** of the same second stage COOL speed position.
Continuous Fan Only speed is approximately **38%** of the same second stage COOL speed position.
Lennox® LZSV Variable Zoning System Applications - Minimum blower speed is 460 cfm.

BLOWER DATA

ML297DF110XV60CK BLOWER PERFORMANCE (less filter)

BOTTOM RETURN AIR

0 through 0.8 in. w.g. (Heating) and 0 through 1.0 in. w.g. (Cooling) External Static Pressure Range

"ADJUST" Switch Positions	Speed Switch Positions							
	Second Stage "HEAT" Speed - cfm				Second Stage "COOL" Speed - cfm			
	Low	Med-Low	[1] Med-High	High	Low	Med-Low	Med-High	[1] High
+	1595	1795	1955	2010	1335	1585	1790	2010
[1] NORM	1450	1615	1795	1865	1220	1440	1630	1865
—	1290	1460	1610	1680	1100	1275	1475	1680
"ADJUST" Switch Positions	First Stage "HEAT" Speed - cfm				First Stage "COOL" Speed - cfm			
	Low	Med-Low	[1] Med-High	High	Low	Med-Low	Med-High	[1] High
+	1165	1305	1465	1547	920	1095	1265	1440
[1] NORM	1055	1185	1315	1404	830	965	1130	1290
—	930	1070	1180	1272	735	860	1035	1155

[1] Factory default jumper setting.

NOTES - The effect of static pressure is included in air volumes shown.
First stage HEAT is approximately **73%** of the same second stage HEAT speed position.
First stage COOL (two-stage air conditioning units only) is approximately **70%** of the same second stage COOL speed position.
Continuous Fan Only speed is approximately **38%** of the same second stage COOL speed position.
Lennox® LZSV Variable Zoning System Applications - Minimum blower speed is 380 cfm.

PARTS IDENTIFICATION

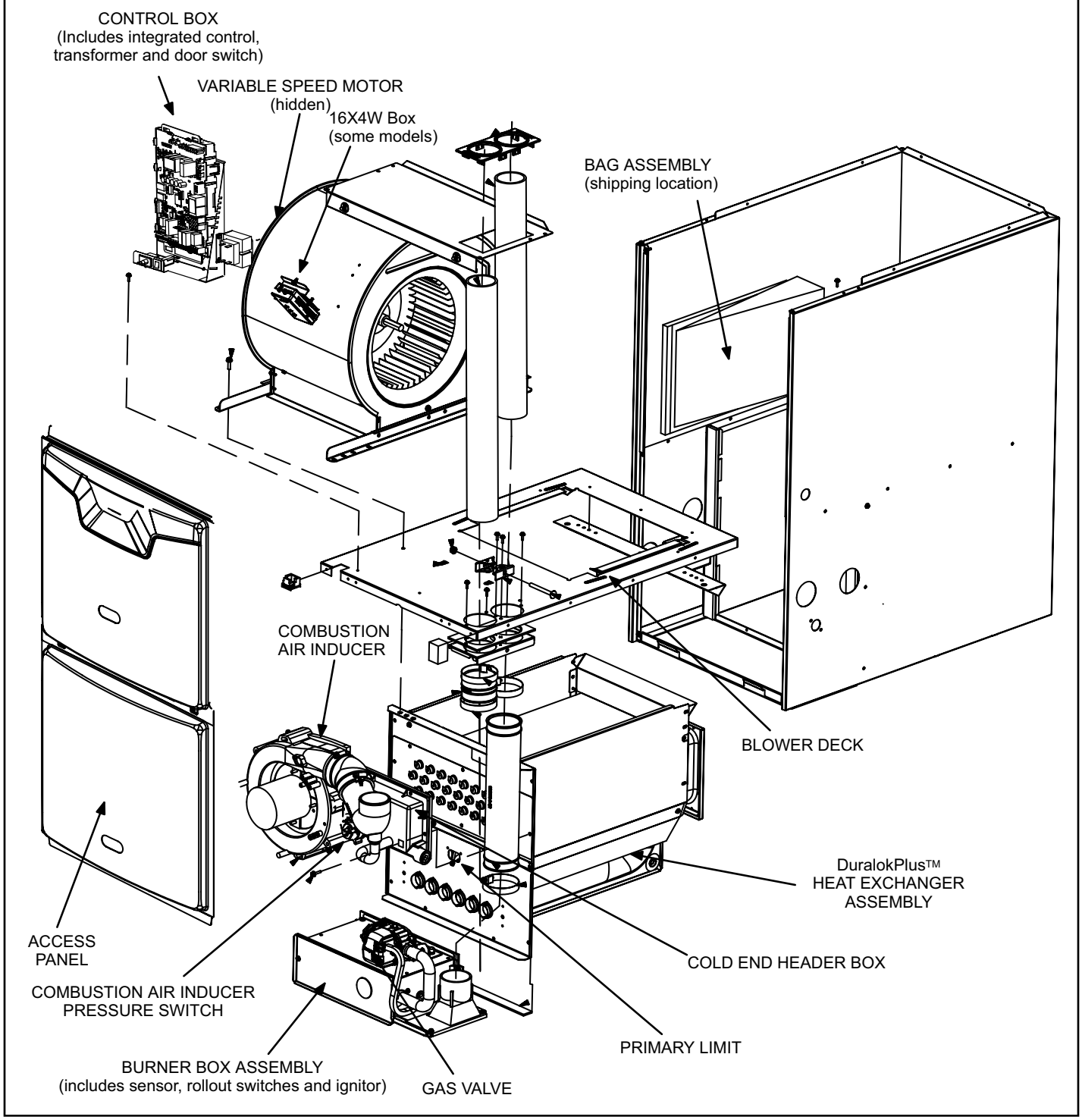

FIGURE 1

I-UNIT COMPONENTS

ML297DFVK(X) unit components are shown in FIGURE 1. The gas valve, combustion air inducer and burners can be accessed by removing the access panel. Electrical components are in the control box (FIGURE 2) found in the blower section.

⚠ IMPORTANT

When matching this gas furnace with zoning, dual fuel or other 24V accessories, It is recommended to replace the factory installed transformer with kit 27J32.

Kit 27J32 contains a 75VA transformer, so you do not overload the original 40VA transformer.

A- Control Box

1. Control Transformer (T1)

A transformer located in the control box provides power to the low voltage section of the unit. Transformers on all models are rated 40VA with a 120V primary and a 24V secondary.

2. Door Interlock Switch (S51)

A door interlock switch rated 14A at 125VAC is wired in series with line voltage. When the inner blower access panel is removed the unit will shut down.

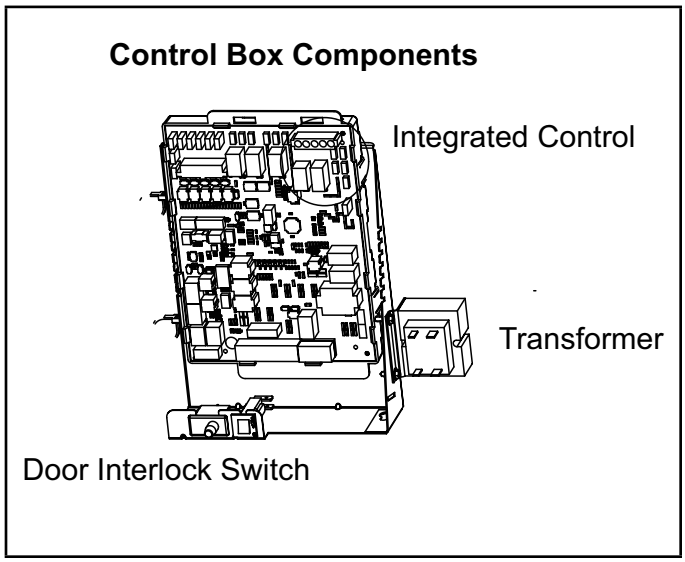

FIGURE 2

⚠ WARNING

Shock hazard.

Disconnect power before servicing. Integrated control is not field repairable. If control is inoperable, simply replace entire control. Can cause injury or death. Unsafe operation will result if repair is attempted.

3. Integrated Control (A92)

Units are equipped with a two-stage, variable speed integrated control. The system consists of a ignition / blower control (FIGURE 4) with control pin designations in TABLE 1, TABLE 2, TABLE 3 and ignitor. The control and ignitor work in combination to ensure furnace ignition and ignitor durability. The control provides gas ignition, safety checks and indoor blower control with two-stage gas heating. The furnace combustion air inducer, gas valve and indoor blower are controlled in response to various system inputs such as thermostat signal, pressure and limit switch signal and flame signal.

The furnace has a built-in, self-diagnostic capability. If a system problem occurs, a fault code is shown by a red LED on the control. The control continuously monitors its own operation and the operation of the system. If a failure occurs, the LED will indicate the failure code. The flash codes are presented in TABLE 4.

4. Circuit Breaker (CB8)

A 24V circuit breaker is also located in the control box. The switch provides overcurrent protection to the transformer (T1). The breaker is rated 3A at 32V. If the current exceeds this limit the breaker will trip and all unit operation will shutdown. The breaker can be manually reset by pressing the button on the face. See FIGURE 3.

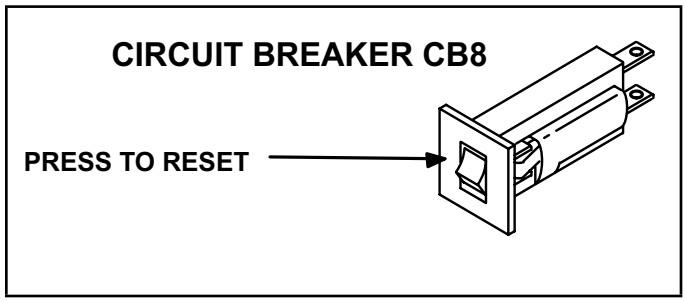

FIGURE 3

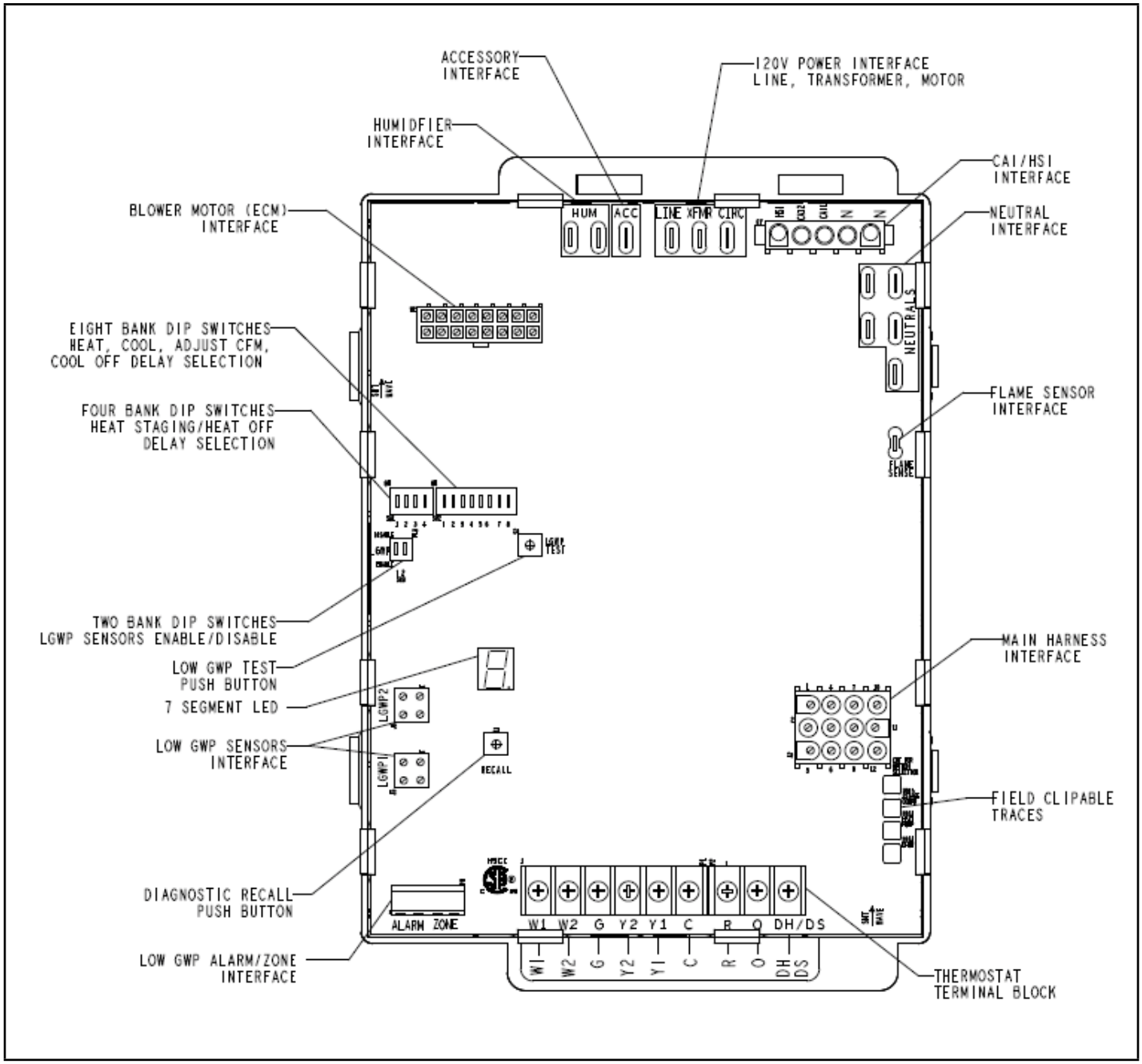
ACCESSORY INTERFACE
120V POWER INTERFACE LINE, TRANSFORMER, MOTOR
HUMIDFIER INTERFACE
CAI/HSI INTERFACE
BLOWER MOTOR (ECM) INTERFACE
NEUTRAL INTERFACE
EIGHT BANK DIP SWITCHES HEAT, COOL, ADJUST CFM, COOL OFF DELAY SELECTION
FOUR BANK DIP SWITCHES HEAT STAGING/HEAT OFF DELAY SELECTION
FLAME SENSOR INTERFACE
TWO BANK DIP SWITCHES LGWP SENSORS ENABLE/DISABLE
LOW GWP TEST PUSH BUTTON
7 SEGMENT LED
MAIN HARNESS INTERFACE
LOW GWP SENSORS INTERFACE
FIELD CLIPABLE TRACES
DIAGNOSTIC RECALL PUSH BUTTON
LOW GWP ALARM/ZONE INTERFACE
THERMOSTAT TERMINAL BLOCK
HUM
ACC
LINE
XFMR
CIRC
NEUTRALS
LGWP2
LGWP1
RECALL
ALARM ZONE
W1 W2 G Y2 Y1 C R O DH/DS

FIGURE 4

TABLE 1

1/4” QUICK CONNECT TERMINALS	
LINE	120VAC INPUT TO THE CONTROL
XFMR	120VAC OUTPUT TO THE TRANSFORMER
CIRC	120VAC OUTPUT TO THE INDOOR BLOWER BLOWER
HUM	UNPOWERED NORMALLY OPEN (DRY) CONTACTS
ACC	120VAC OUTPUT TO THE OPTIONAL ACCESSORY
NEUTRALS	120VAC NEUTRALS (5)
3/16” QUICK CONNECT TERMINALS	
FLAME SENSE	FLAME SENSESOR INTERFACE

TABLE 2

THERMOSTAT INPUT TERMINALS	
W1	LOW STAGE HEAT
W2	HIGH STAGE HEAT
G	FAN
Y1	LOW STAGE COOL (when W915 is clipped)
Y2	HIGH STAGE COOL (when W915 is clipped)
C	THERMOSTAT COMMON / GROUND
R	24VAC POWER TO THE THERMOSTAT
O	HEAT PUMP REVERSING VALVE (when W951 is clipped)
DH / DS	DEHUM / HARMONY(when W914 is clipped)

TABLE 3

LOW GWP INTERFACE	
LGWP1	LOW GWP SENSOR #1 INTERFACE
LGWP2	LOW GWP SENSOR # 2 INTERFACE
ALARM	INTERFACE TO LOW GWP LEAK AUDIBLE ALARM (DRY CONTACT)
ZONE	INTERFACE TO ZONING CONTROL FOR LOW GWP APPLICATIONS
LGWP TEST	PUSH BUTTON TO TEST LOW GWP FUNCTIONALITY

Diagnostic LED

The seven-segment diagnostic LED displays operating status, error codes and other information. The table beginning on TABLE 4 lists diagnostic LED codes.

Diagnostic Push Button

The diagnostic push button is located adjacent to the seven-segment diagnostic LED. This button is used to enable the Error Code Recall “E” mode and the Flame Signal “F” mode. Press the button and hold it to cycle through a menu of options. Every five seconds a new menu item will be displayed. When the button is released, the displayed item will be selected. Once all items in the menu have been displayed, the menu resumes from the beginning until the button is released.

Error Code Recall Mode

Select ”E” from the menu to access the most recent 10 error codes. Select “c” from the Error Code Recall menu to clear all error codes. Button must be pressed a second time while “c” is flashing to confirm command to delete codes. Press the button until a solid “≡” is displayed to exit the Error Code Recall mode.

Flame Signal Mode

Select ”F” from the menu to access the flame signal mode. The integrated control will display the flame current on seven-segment LED in in micro amps (uA). Flame signal mode is exited after any of the following:

- Power is reset
- Pressing and holding push button until 3 horizontal
- lines “≡” are displayed
- 10 minutes after entering the flame sense mode

TABLE 4

CODE	DIAGNOSTIC CODES/STATUS OF FURNACE
.	Idle mode (Decimal blinks at 1 Hertz -- 0.5 second ON, 0.5 second OFF).
A	Cubic feet per minute(cfm) setting for indoor blower (1 second ON, 0.5 second OFF) / cfm setting for current mode displayed.
C	Cooling stage (1 sec. ON, 0.5 sec. OFF) 1 or 2 displayed / Pause / cfm setting displayed / Pause / Repeat codes.
d	Dehumidification mode (1 second ON, 1 second OFF) CFM setting displayed / Pause/ Repeat Codes.
H	Gas Heat Stage (1 sec. ON, 0.5 sec. OFF) 1 or 2 displayed / Pause/ cfm displayed / Pause / Repeat codes. Blinking - Ignition.
h	Heat Pump Stage. (1 second ON, 0.5 sec OFF) 1 or 2 displayed / Pause / cfm setting displayed / Pause / Repeat codes)
dF	Defrost mode.
E 000	No error in memory
E 110	Low line voltage.
E 111	Line voltage polarity reversed
E 112	Ground not detected
E 113	High line voltage.
E 117	Poor ground detected (Warning only).
E 125	Control failed self-check, internal error, failed hardware. Will restart if error recovers. Covers hardware errors (flame sense circuit faults, pin shorts) etc.
E 150	Refrigerant leak detected
E 151	Refrigerant Leak Detector Sensor #1 Fault
E 152	Refrigerant Leak Detector Sensor #2 Fault
E 154	Refrigerant Leak Detector Sensor #1 Comm. Lost or invalid sensor dip switch configuration (ON/OFF)
E 155	Refrigerant Leak Detector Sensor #2 Comm. Lost
E 160	Refrigerant Leak Detector Sensor #1 Type Incorrect
E 161	Refrigerant Leak Detector Sensor #2 Type Incorrect
E 163	Refrigerant Leak Detector Control Failure
E 164	Low GWP Test
E 200	Hard lockout - Rollout circuit open or previously open.
E 204	Gas valve mis-wired.
E 205	Control gas valve relay contact shorted.
E 207	Hot surface ignitor sensed open - Refer to troubleshooting in installation instruction.
E 223	Low pressure switch failed open - Refer to troubleshooting in installation instruction.
E 224	Low pressure switch failed closed - Refer to troubleshooting in installation instruction.
E 225	High pressure switch failed open - Refer to troubleshooting in installation instruction.
E 226	High pressure switch failed closed - Refer to troubleshooting in installation instruction.
E 227	Low pressure switch opened during trial for ignition or run mode - Refer to troubleshooting in installation instruction.
E 229	Ignition on high fire
E 240	Low flame current - Run mode - Refer to troubleshooting in installation instruction.
E 241	Flame sensed out of sequence - Flame still present.
E 250	Limit switch circuit open - Refer to troubleshooting in installation instruction.
E 270	Soft lockout - Exceeded maximum number of retries. No flame current sensed.
E 271	Soft lockout - Exceeded maximum number of retries. Last retry failed due to pressure switch opening.
E 272	Soft lockout - Exceeded maximum number of recycles. Last recycle failed due to pressure switch opening.
E 273	Soft lockout - Exceeded maximum number of recycles. Last recycle failed due to a flame failure.
E 274	Soft lockout - Exceeded maximum number of recycles. Last recycle failed due to the limit circuit opening or the limit remained open longer than 3 minutes.
E 275	Soft lockout - Flame sensed out of sequence from code 241 fault. Flame signal is gone.
E 292	Indoor blower motor unable to start or unable to communicate with the control.
E 311	Heat rate reduced to match indoor blower air flow. Replace filter or repair duct restriction.
E 390	Low GWP Relay Stuck

Ignition Control Diagnostic Codes

Code	Diagnostic Codes/Status of Equipment	Action Required to Clear and Recover
.	Idle mode (Decimal blinks at 1 Hertz -- 0.5 second ON, 0.5 second OFF).	
A	Continuous Fan Mode Only	
C	Cooling stage (1 second ON, 0.5 second OFF) / 1 or 2 displayed / Pause / cfm setting displayed / Pause / Repeat codes).	
d	Dehumidification mode (1 second ON) / 1 second OFF) / cfm setting displayed / Pause / Repeat Codes).	
h	Heat pump stage (1 second ON, 0.5 second OFF) / % of input rate displayed / Pause / cfm setting / Pause / Repeat codes.	
H	Gas Heat Stage (1 second ON, 0.5 second OFF) / 1 or 2 displayed / Pause / cfm setting displayed / Pause / Repeat codes. Blinking during ignition.	
dF	Defrost mode.	
E000	No error in memory	
E110	Low line voltage.	Line Voltage Low (Voltage lower than nameplate rating). Check power line voltage and correct. Alarm clears 5 seconds after fault recovered.
E111	Low line voltage.	Reverse line power voltage wiring. System resumes normal operation 5 seconds after fault recovered.
E112	Ground not detected	System shuts down. Provide proper earth ground. System resumes normal operation 5 seconds after fault recovered.
E113	High line voltage.	Line Voltage High (Voltage higher than nameplate rating). Provide power voltage within proper range. System resumes normal operation 5 seconds after fault recovered.
E117	Poor ground detected (Warning only)	Provide proper grounding for unit. Check for proper earth ground to the system. Warning only will clear 30 seconds after fault recovered.
E125	Control failed self-check, internal error, failed hardware. Will restart if error recovers. Integrated control not communicating. Covers hardware errors (flame sense circuit faults, pin shorts, etc.).	Hardware problem on the control. Cycle power on control. Replace if problem prevents service and is persistent. Critical alert. Cleared 300 seconds after fault recovered.

Ignition Control Diagnostic Codes Continued

Code	Diagnostic Codes/Status of Equipment	Action Required to Clear and Recover
E150	A2L Refrigerant leak alarm	This may indicate the presence of a leak at or in the indoor unit coil of the equipment, that will need to be repaired for proper and safe operation. Additionally, it may indicate that proper refrigerant charge will need to be verified. The fault cannot be cleared while the refrigerant detection system sensor is reporting the presence of a leak.
E151	Refrigerant Leak Detector Sensor #1 fault	The refrigerant detection sensor #1 in the unit is reporting an issue that prevents it from functioning properly and replacement of the sensor may be necessary. This fault clears when the sensor no longer reports the presence of a fault condition.
E152	Refrigerant Leak Detector #2 Fault	The refrigerant detection sensor #1 in the unit is reporting an issue that prevents it from functioning properly and replacement of the sensor may be necessary. This fault clears when the sensor no longer reports the presence of a fault condition.
E154	Refrigerant Leak Detector #1 Communication lost or invalid sensor dip switch configuration (Disable/Enable)	There may be an issue with the wiring harness connecting the sensor #1 to the furnace control board, either with the wiring itself or with the connector. Check the wiring and connector for damage or improper connectivity. Check the sensor for damage or obstruction on the harness plug. This fault clears when communicati9ons with the senor has been reestablished, but blower latches for a minimum 5 minutes. Retest of the presence of fault can be effected by pressing the LOW GWP test button on the furnace unit control board. This may also indicate incorrect LOW GWP dip switch settings. See installation instructions.
E155	Refrigerant Leak Detector #2 Communication lost	There may be an issue with the wiring harness connecting the sensor #1 to the furnace control board, either with the wiring itself or with the connector. Check the wiring and connector for damage or improper connectivity. Check the sensor for damage or obstruction on the harness plug. This fault clears when communicati9ons with the senor has been reestablished, but blower latches for a minimum 5 minutes. Retest of the presence of fault can be effected by pressing the LOW GWP test button on the furnace unit control board.
E160	Refrigerant Leak Detector Sensor #1 type incorrect	The sensor #1 is of a type not suitable for use in the application. Replace the sensor with a Lennox approved replacement part. This fault clears when a sensor suitable for the application is detected by the furnace control board, but blower will latch for a minimum of 5 minutes. Retest of the presence of the fault can be effected by pressing the LOW GWP test button on the furnace unit control board.
E161	Refrigerant Leak Detector Sensor #2 type incorrect	The sensor #2 is of a type not suitable for use in the application. Replace the sensor with a Lennox approved replacement part. This fault clears when a sensor suitable for the application is detected by the furnace control board, but blower will latch for a minimum of 5 minutes. Retest of the presence of the fault can be effected by pressing the LOW GWP test button on the furnace unit control board.
E163	Furnace Control Board Failure	There is an issue with the furnace control board, preventing the furnace from operating properly. This may require the replacement of the indoor unit control board. This fault clears when the furnace controller operates normally.

Ignition Control Diagnostic Codes Continued		
Code	Diagnostic Codes/Status of Equipment	Action Required to Clear and Recover
E164	Low GWP Test	Low GWP Test mode activates by manually engaging Low GWP test button. Normal operations resumes and codes clear automatically after 1-minute.
E200	Hard lockout - Rollout circuit open or previously open.	Correct cause of rollout trip, or replace flame rollout switch. Test furnace operation. Cleared after fault recovered.
E204	Gas valve mis-wired.	Check gas valve operation and wiring. Clears when repaired.
E205	Gas valve control relay contact shorted.	Check wiring on control and gas valve. If wiring is correct, replace control.
E207	Hot surface ignitor sensed open	Measure resistance of hot surface ignitor. Replace if open or not within specified range found in IOM. Resumes normal operation after fault is cleared.
E223	Low pressure switch failed open.	Check pressure (inches w.c.) of low pressure switch closing on heat call. Measure operating pressure (inches w.c.). Inspect vent and combustion air inducer for correct operation and restriction. Resumes normal operation after fault is cleared.
E224	Low pressure switch failed closed	Check operation of low pressure switch to see if it is stuck closed on heat call longer than 150 seconds. Measure operating pressure (inches w.c.). Inspect vent and combustion air inducer for correct operation and restriction. Resumes normal operation after fault is cleared.
E225	High pressure switch failed open.	Check pressure (inches w.c.) of high pressure switch closing on heat call. Measure operating pressure (inches w.c.). Inspect vent and combustion air inducer for correct operation and restriction. Resumes normal operation after fault is cleared.
E226	High pressure switch failed closed	Check operation of high pressure switch closing on heat call. Measure operating pressure (inches w.c.). Inspect vent and combustion air inducer for correct operation and restriction. Resumes normal operation after fault is cleared.
E227	Low pressure switch open during trial for ignition or run mode.	Check pressure (inches w.c.) of low pressure switch closing on heat call. Measure operating pressure (inches w.c.). Inspect vent and combustion air inducer for correct operation and restriction. Resumes normal operation after fault is cleared.
E229	Ignition on high fire	IFC switched to high fire ignition because low fire pressure switch did not close in allowed time. No action is needed.
E240	Low flame current - Run mode.	Check micro-amperes of flame sensor using control diagnostics or field-installed mode. Clean or replace sensor. Measure voltage of neutral to ground to ensure good unit ground. Alert clears after current heat call has been completed. See TABLE 12 for flame signal.

Ignition Control Diagnostic Codes Continued

Code	Diagnostic Codes/Status of Equipment	Action Required to Clear and Recover
E241	Flame sensed out of sequence - Flame still present.	Shut off gas. Check for gas valve leak. Replace, if necessary. Alert clears when fault is recovered.
E250	Limit switch circuit open.	Check for proper firing rate on furnace. Ensure there is no blockage in heater. Check for proper air flow. If limit not closed within 3 minutes, unit will go into 1-hour soft lockout. Resumes normal operation after fault is cleared.
E270	Soft lockout - Exceeded maximum number of retries. No flame current sensed.	Check for proper gas flow. Ensure that ignitor is lighting burner. Check flame sensor current. Clears when heat call finishes successfully.
E271	Soft lockout - Exceeded maximum number of retries. Last retry failed due to the pressure switch opening.	Check pressure (inches w.c.) of low pressure switch closing on heat call. Measure operating pressure (inches w.c.). Inspect vent and combustion air inducer for correct operation and restriction. Clears when heat call finishes successfully.
E272	Soft lockout - Exceeded maximum number of recycles. Last recycle due to the pressure switch opening.	Check operation of low pressure switch to see if it is stuck closed on heat call. Check pressure (inches w.c.) of high pressure switch closing on heat call. Measure operating pressure (inches w.c.). Inspect vent and combustion air inducer for correct operation and restriction. Clears when heat call finishes successfully.
E273	Soft lockout - Exceeded maximum number of recycles. Last recycle due to flame failure.	Check micro-amperes of flame sensor using control diagnostics or field-installed mode. Clean or replace sensor. Measure voltage of neutral to ground to ensure good unit ground. Clears when heat call finishes successfully.
E274	Soft lockout - Exceeded maximum number of recycles. Last recycle failed due to the limit circuit opening or limit remained open longer than 3 minutes	Shut down system. 1-hour soft lockout. Check firing rate and air flow. Check for blockage. Clears when heat call finishes successfully.
E275	Soft lockout - Flame sensed out of sequence. Flame signal is gone.	Shut off gas. Check for gas valve leak. 1-hour soft lockout. Clears when flame has been proven stable.
E292	Indoor blower motor unable to start due to obstructed wheel, seized bearings.	Replace motor or wheel if assembly does not operate or meet performance standards. 1 hour soft lock- out clears after circulator successfully starts.
E311	Heat rate reduced to match indoor blower air flow.	Warning Only. Furnace blower in cutback mode due to restricted airflow. Reduce firing rate every 60 seconds to match available CFM. Check filter and duct sytem. To clear, replace filter if needed or repair/add duct. 2 stage controls will reduce firing rate to 1st stage. Clears when heat call finishes successfully.
E390	Low GWP Relay Stuck	Thuis induicates as issue with the low GWP relay in the furnace control. This may require the replacement of the unit control board. This fault clears when the relay operates normally.

INTEGATED CONTROL CONFIGURATION

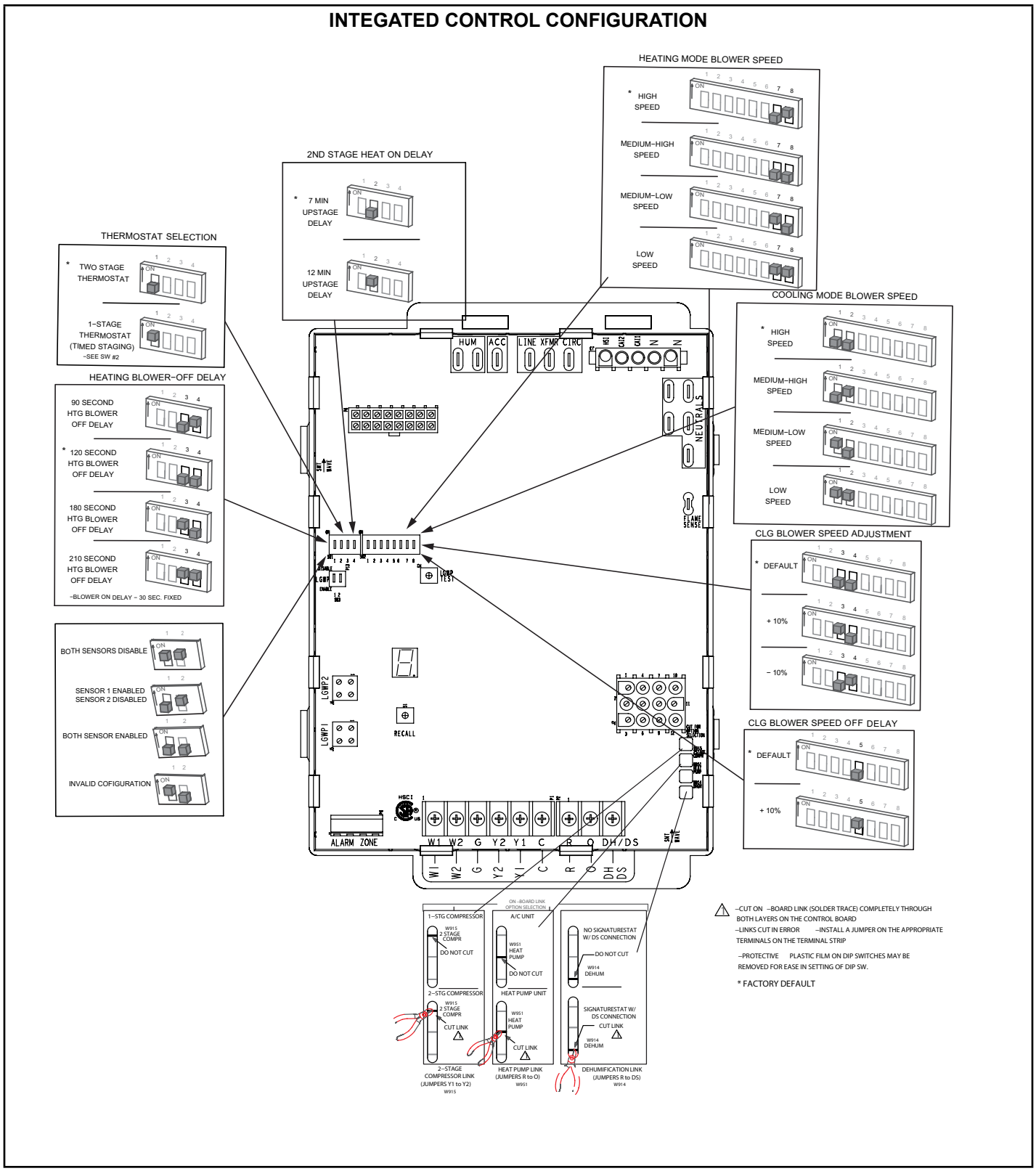

FIGURE 5

Integrated Control DIP Switch Settings Conventional Thermostat

ML297DFVK(X) units are equipped with a two-stage, variable speed integrated control. This control manages ignition timing, heating mode fan off delays and indoor blower speeds based on selections made using the control dip switches. The control includes an internal watchguard feature which automatically resets the ignition control when it has been locked out. After one hour of continuous thermostat demand for heat, the watchguard will break and remake thermostat demand to the furnace and automatically reset the control to relight the furnace.

Bank Of Four DIP Switches SW1 - DIP Switch Settings

Switch 1 - Thermostat Selection - This unit may be used with either a single-stage or two-stage thermostat. The thermostat selection is made using a DIP switch which must be properly positioned for the particular application. The DIP switch is factory-positioned for use with a two-stage thermostat. If a single-stage thermostat is to be used, the DIP switch must be repositioned.

a. Select "OFF" for two-stage heating operation controlled by a two-stage heating thermostat (factory setting);

b. Select "ON" for two-stage heating operation controlled by a single-stage heating thermostat. This setting provides a timed delay before second-stage heat is initiated.

Switch 2 - Second Stage Heat Delay (Used with Single- Stage Thermostat Only) - This switch is used to determine the second stage on delay when a single-stage thermostat is being used. The switch is factory-set in the OFF position, which provides a 7-minute delay before second stage heat is initiated. If the switch is toggled to the ON position, it will provide a 12-minute delay before second stage heat is initiated. This switch is only activated when the thermostat selector jumper is positioned for single stage thermostat use.

Switches 3 and 4 - Heat Indoor Blower-Off Delay - The blower-on delay of 30 seconds is not adjustable. The blower-off delay (time that the blower operates after the heating demand has been satisfied) can be adjusted by moving switches 3 and 4 on the integrated control. The unit is shipped from the factory with a blower-off delay of 90 seconds. The blower off delay affects comfort and is adjustable to satisfy individual applications. Adjust the blower off delay to achieve a supply air temperature between 90° and 110°F at the exact moment that the blower is de-energized. Longer off delay settings provide lower supply air temperatures; shorter settings provide higher supply air temperatures. TABLE 5 provides the blower off timings that will result from different switch settings.

TABLE 5

Blower Off Delay Switch Settings

Blower Off Delay Seconds	Switch 3	Switch 4
90	Off	On
120 (default)	Off	Off
180	On	Off
210	On	On

Bank Of Eight DIP Switches SW2

Switches 1 and 2 - Cooling Mode Blower Speed - The unit is shipped from the factory with the dip switches positioned for high speed (4) indoor blower motor operation during the cooling mode. TABLE 6 provides the cooling mode blower speeds that will result from different switch settings. Switches 1 and 2 set the blower cfm for second stage cool. The integrated control automatically ramps down to 70% of the second-stage cfm for first-stage cfm. Refer to tables for corresponding cfm values. See Product Specifications for more detailed blower cfm tables.

TABLE 6

Cooling Mode Blower Speeds

Speed	Switch 1	Switch 2
Low	On	On
Medium Low	On	Off
Medium High	Off	On
High (Default)	Off	Off

Switches 3 and 4 - Blower Speed Adjustment

The unit is shipped from the factory with the dip switches positioned for NORMAL (no) adjustment. The dip switches may be positioned to adjust the blower speed by +10% or -10% to better suit the application. TABLE 7 below provides blower speed adjustments that will result from different switch settings. Refer to tables for corresponding cfm values. See Product Specifications for more detailed blower cfm tables.

TABLE 7

Blower Speed Adjustment		
Adjustment	**Switch 3**	**Switch 4**
+10 %(approx)	On	Off
Normal (Default)t	Off	Off
-10 % (approx)	Off	On
Field Test (do not use)	On	On

Switch 5 - Cooling / Heat Pump Blower Off Delay

The unit is shipped from the factory with DIP switch positioned OFF for a 45 second delay. TABLE 8 provides the cooling mode off settings.

TABLE 8

Blower Off Cooling Mode Delay Switch Setting

Blower Off Delay Seconds	Switch 5
45 (factory)	Off
2	On

NOTE - For a smooth transition of indoor blower CFM between operations in heat pump and defrost applications, it is recommended to turn switch 5 to ON position.

Switch 6 Not Used

Switches 7 and 8 - Heating Mode Blower Speeds

These switches are factory set to the OFF position which provides factory default heat speed. See TABLE 9 for switch setting. See TABLE 10 for allowable heating speeds.

TABLE 9

Heat Speed	DIP Switch 7	DIP Switch 8
Medium High	Off	Off
High	Off	On
Medium Low	On	Off
Low	On	On

TABLE 10

<table>
<tr><th colspan="6">Allowable Heating Speeds</th></tr>
<tr><th>ML297DFVK(X) Model</th><th>Speed Adjust</th><th>Low</th><th>Medium</th><th>Medium / High</th><th>High</th></tr>
<tr><td rowspan="3">070XV48BK</td><td>+10%</td><td rowspan="9">Allowed</td><td rowspan="9">Allowed</td><td>Allowed</td><td rowspan="3">Allowed</td></tr>
<tr><td>Norm</td><td>Factory Setting</td></tr>
<tr><td>-10%</td><td rowspan="2">Allowed</td></tr>
<tr><td rowspan="3">090XV60CK</td><td>+10%</td><td rowspan="6">Allowed</td></tr>
<tr><td>Norm</td><td>Factory Setting</td></tr>
<tr><td>-10%</td><td rowspan="2">Allowed</td></tr>
<tr><td rowspan="3">110XV60CK</td><td>+10%</td></tr>
<tr><td>Norm</td><td>Factory Setting</td></tr>
<tr><td>-10%</td><td>Allowed</td></tr>
</table>

ON BOARD LINKS

⚠ WARNING

Carefully review all configuration information provided. Failure to properly set DIP switches, jumpers and on-board links can result in improper operation!

On-Board Link W914 Dehum or Harmony (R to DS)

On-Board Link W914 Dehum or Harmony (R to DS) On-board link W914, is a clippable connection between terminals R and DS on the integrated control. W914 must be cut when the furnace is installed with either the Harmony III zone control or a thermostat which features humidity control. See active Dehumidification section for more detail.If the link is left intact the PMW signal from the Harmony III control will be blocked and also lead to control damage.

On-Board Link W951 Heat Pump (R to O)

On-board link W951 is a clippable connection between terminals R and O on the integrated control. W951 must be cut when the furnace is installed in applications which include a heat pump unit and a thermostat which features dual fuel use. If the link is left intact, terminal “O” will remain energized eliminating the HEAT MODE in the heat pump.

On-Board Link W915 2 Stage Compr (Y1 to Y2)

On-board link W915 is a clippable connection between terminals Y1 and Y2 on the integrated control. W915 must be cut if two-stage cooling will be used. If the Y1 to Y2 link is not cut the outdoor unit will operate in second-stage cooling only.

Diagnostic Push Button

The diagnostic push button is located adjacent to the seven-segment diagnostic LED. This button is used to enable the Error Code Recall “E” mode and the Flame Signal “F” mode. Press the button and hold it to cycle through a menu of options. Every five seconds a new menu item will be displayed. When the button is released, the displayed item will be selected. Once all items in the menu have been displayed, the menu resumes from the beginning until the button is released.

Humidifier

An unpowered, normally open (dry) set of contacts with a 1/4” spade terminal “HUM” are provided for humidifier connections and may be connected to 24V or 120V. Any humidifier rated up to one amp can be connected to these terminals. In 120V humidifier applications the neutral leg of the circuit can be connected to one of the provided neutral terminals. This terminal is energized in the heating mode.

Accessory Terminals

One line voltage “ACC” 1/4” spade terminal is provided on the furnace integrated control. Refer to FIGURE 53 for integrated control configuration. This terminal is energized when the indoor blower is operatingAny accessory rated up to one amp can be connected to this terminal with the neutral leg of the circuit being connected to one of the provided neutral terminals. If an accessory rated at greater than one amp is connected to this terminal, it is necessary to use an external relay.

Variable Speed Features

This furnace is equipped with a variable speed circulation air blower motor that will deliver a constant airflow within a wide range of external static pressures. Other features of this variable speed motor include:

Soft Start

The variable speed motor will slowly ramp up to normal operating speed. This minimizes noise and increases comfort by eliminating the initial blasts of air encountered with standard motors.

Soft Stop

At the end of a cooling or heating cycle, the variable speed motor will slowly ramp down after a short blower “off” delay. If continuous blower operation has been selected, the variable speed motor will slowly ramp down until it reaches the airflow for that mode.

Passive and Active Dehumidification

Both the passive and active dehumidification methods described below can be utilized on the same furnace.

Passive Dehumidification

For situations where humidity control is a problem, a dehumidification feature has been built into the variable speed motor. At the start of each cooling cycle, the variable speed motor will run at 82% of the rated airflow for 7.5 minutes. After 7.5 minutes has elapsed, the motor will increase to 100% of the rated airflow.

Active Dehumidification

To achieve additional dehumidification, clip the R to DH/DS on the integrated ignition/ blower control board and connect a humidity control that opens on humidity rise to the DEHUM and R terminals. The DEHUM terminal on the control board must be connected to the normally closed contact of the humidity control so that the board senses an open circuit on high humidity. In this setup, the variable speed motor will operate at a 30% reduction in the normal cooling airflow rate when there is a call for dehumidification.

Continuous Blower Operation

The comfort level of the living space can be enhanced when using this feature by allowing continuous circulation of air between calls for cooling or heating. The circulation of air occurs at the full cooling airflow rate.

To engage the continuous blower operation, place the fan switch on the thermostat into the ON position. A call for fan from the thermostat closes R to G on the ignition control board. The control waits for a 1 second thermostat delay before responding to the call for fan by ramping the circulating blower at to 38% of the cooling speed. When the call for continuous fan is satisfied, the control immediately ramps down the circulating blower.

B-Indoor Blower

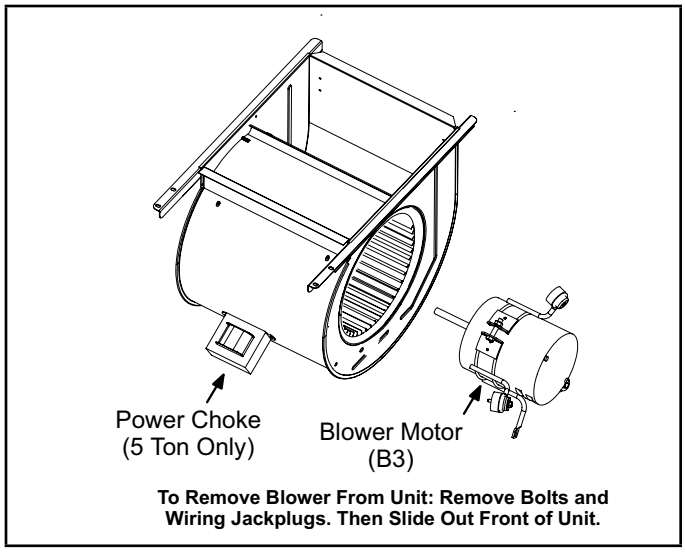

FIGURE 6

1. Blower Motor (B3)

Blower motors are manufactured by GenTeq and Nidec. See FIGURE 7 and FIGURE 8. Motors operate the same and are only different in physical appearance. They are both three-phase, electronically controlled DC brushless motors (controller converts single-phase AC to three-phase DC), with a permanent magnet type rotor (FIGURE 7). Because these motors have a permanent magnet rotor it does not need brushes like conventional DC motors.

All blower motors use single phase power. An external run capacitor is not used. The motor uses permanently lubricated ball-type bearings.

Wiring interface for both manufactured motors are similar.

2. Blower Motor Controller

A solid-state controller is attached to the motor. The controller is primarily an AC to DC converter. Converted DC power is used to drive the motor. The controller on the NIDEC motor includes the 16X4W control with three LED's PW, RX and TX located on the face for troubleshooting. FIGURE 8 shows the location of the 16X4W and TABLE 11 the LED codes. The 16X4W may be located on the indoor blower housing on some models (FIGURE 9). The controller monitors the static workload on the motor and varies motor rpm in order to maintain constant airflow (cfm).

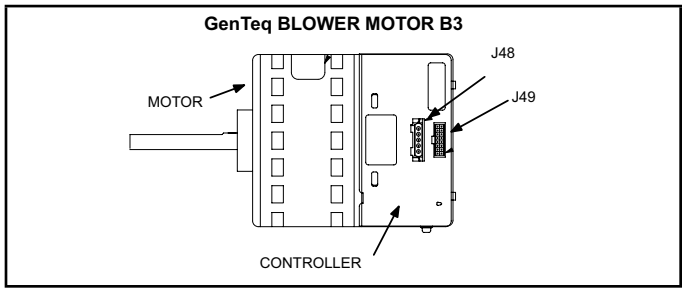

FIGURE 7

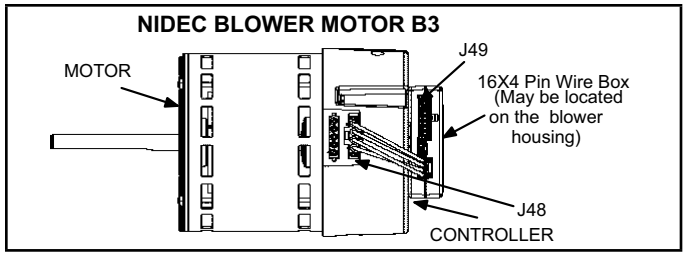

FIGURE 8

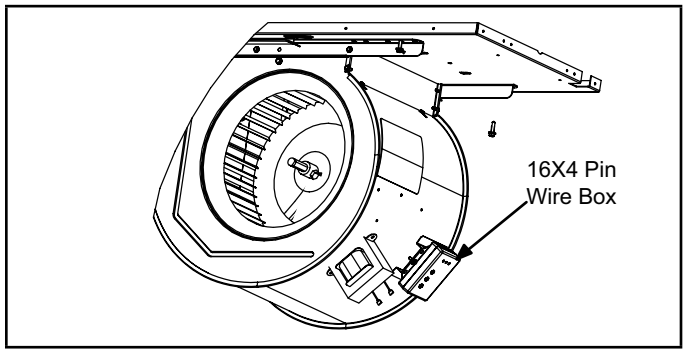

FIGURE 9

Troubleshooting Motor Operation

To verify motor operation see steps below.

1 - Shut off power to the unit.

2 - Remove input connectors J48 and J49 on the motor. See FIGURE 12.

If correct voltage is present in tests 1 and 2 and motor is not operating properly, replace motor. When replacing the blower motor the blower wheel must be centered in the blower housing and the set screw must be aligned and tightened on the flat side of the motor shaft. See FIGURE 10 and FIGURE 11.

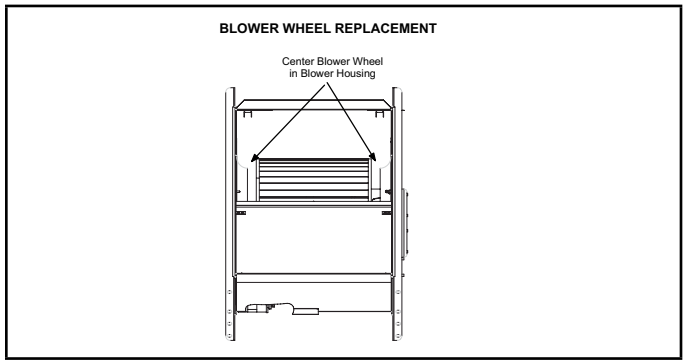

FIGURE 10

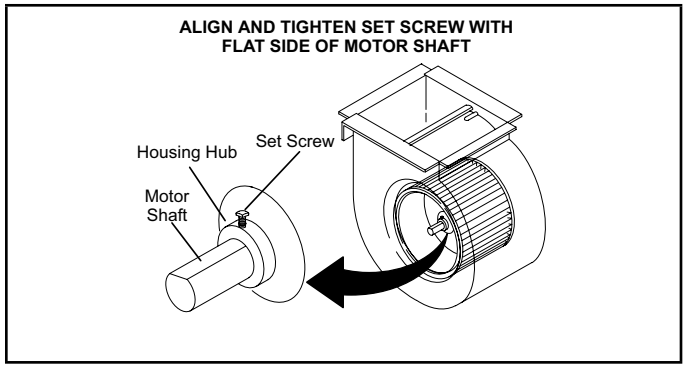

FIGURE 11

TABLE 11

Nidec Motor Only

PW LED	RX LED	TX LED	Motor Blower	Action
Off	Blink	Blink	Not Rotating	Normal
Blink	Blink	Blink	Rotating	Normal. PW blink is 100cfm/blink
Blink	Off	Blink	Not Rotating	Verify 16X4W and motor control hp match. Verify power to motor control. Turn off power for 1 minute then restart. If motor still does not rotate replace the controller.
Off	Off	Off	Not Rotating	Verify power to the 16X4W. Turn off power then restart. If LED's are still out, replace controller.

Motor rpm is continually adjusted internally to maintain constant cfm. The controller monitors the static work load on the motor and motor amp-draw to determine the amount of rpm adjustment. Blower rpm may be adjusted any amount in order to maintain a constant cfm as shown in Blower Ratings Tables. The cfm remains relatively stable over a broad range of static pressure. Since the blower constantly adjusts rpm to maintain a specified cfm, motor rpm is not rated. Hence, the terms "cool speed" , "heat speed " or "speed tap" in this manual, on the unit wiring diagram and on blower B3, refer to blower cfm regardless of motor rpm.

The furnace control displays the desired cfm. The blower will maintain the desired cfm as long as external static pressure does not exceed 0.8". If the system exceeds this amount, the blower may enter a "cut back", mode wherein it then slows down to protect itself from electrical damage. During this "cut back" mode the unit control will still indicate the same desired cfm regardless of actual motor rpm.

When Harmony is used, speed taps are overridden and a PWM signal generated by the Harmony controller continuously varies motor speed based upon zone demands.

Initial Power Up

When line voltage is applied to B3, there will be a large inrush of power lasting less than 1/4 second. This inrush charges a bank of DC filter capacitors inside the controller. If the disconnect switch is bounced when the disconnect is closed, the disconnect contacts may become welded. Try not to bounce the disconnect switch when applying power to the unit.

Motor Start-Up

When B3 begins start-up, the motor gently vibrates back and forth for a moment. This is normal. During this time the electronic controller is determining the exact position of the rotor. Once the motor begins turning, the controller slowly eases the motor up to speed (this is called "soft-start"). The motor may take as long as 10-15 seconds to reach full speed.

If the motor does not reach 200rpm within 13 seconds, the motor shuts down. Then the motor will immediately attempt a restart. The shutdown feature provides protection in case of a frozen bearing or blocked blower wheel. The motor may attempt to start eight times. If the motor does not start after the eighth try, the controller locks out. Reset controller by momentarily turning off power to unit.

The DC filter capacitors inside the controller are connected electrically to the speed tap wires. The capacitors take approximately 5 minutes to discharge when the disconnect is opened. For this reason it is necessary to wait at least 5 minutes after turning off power to the unit before attempting to change speed taps.

⚠ DANGER

Disconnect power from unit and wait at least five minutes to allow capacitors to discharge before attempting to adjust motor speed tap settings. Failure to wait may cause personal injury or death.

External Operation (Speed Tap Priority)

FIGURE 12 and FIGURE 13 show the two quick-connect jacks (J48 and J49) which connect the motor to the ML297DFVK(X). Jack J48 is the power plug and jack J49 connects the unit controls to the motor.

Jack J48 is the power plug. Line voltage must be applied to J48 pins 4 and 5 in order for the motor to operate. When using 120VAC pins 1 and 2 must be jumpered. Jack J49 connects the unit controls to the motor. The motor assigns priority to J49 pin 2 so that if a call for cooling and a call for heating are concurrent, heating call overrides and the blower operates on high speed heating tap.

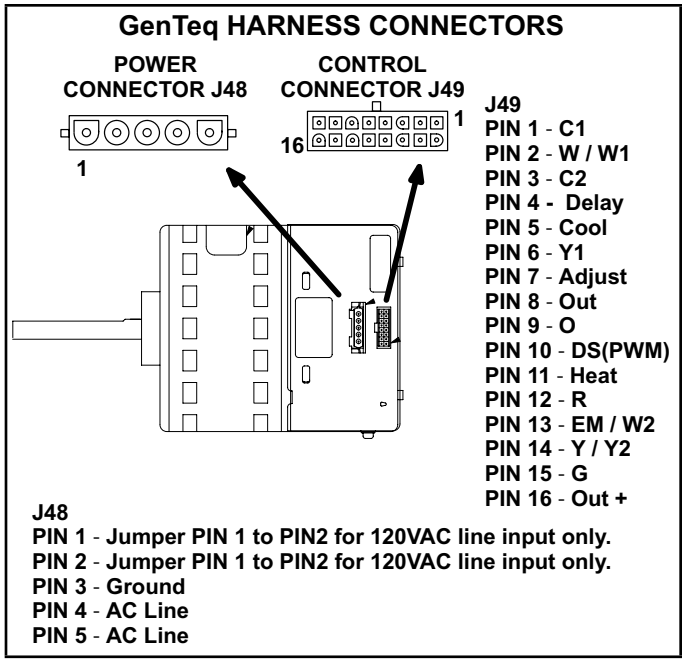

FIGURE 12

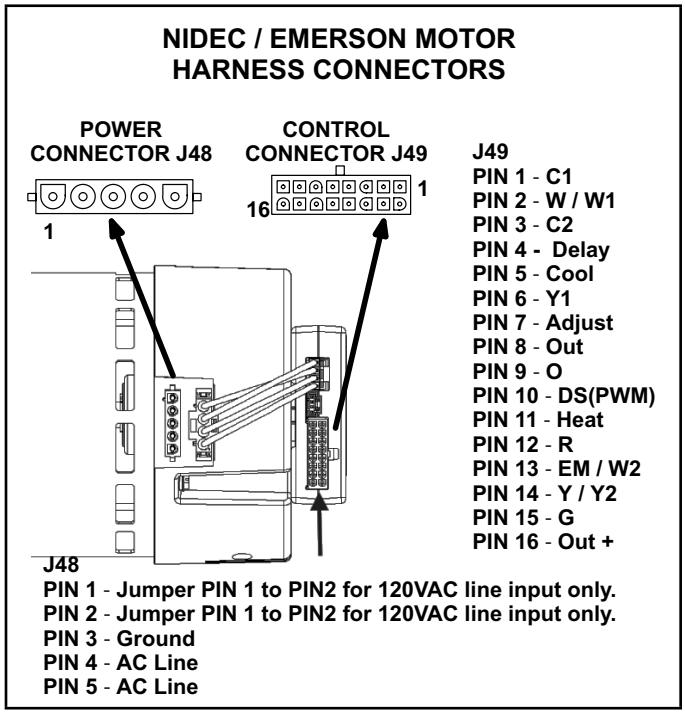

FIGURE 13

2. Power Choke (L13)

A choke coil is used on 4 ton 3/4 hp & 5 ton 1 hp units. The choke is located on the blower housing and is used to suppress transient current spikes.

Precautions

If the furnace or its electronically controlled blower motor is improperly or inadequately grounded, it may cause television interference (commonly known as RFI or radio frequency interference).

This interference is caused by internal switching frequencies of the motor controller. TV interference may show up as small specks or lines which randomly appear on the TV screen accompanied by pops or clicks in the sound. Before attempting any service, make sure the indoor unit is causing the interference. To check, disconnect power to indoor unit then check TV for continued signs of interference.

TV interference may be stopped by making sure the motor is solidly grounded to the cabinet (metal to metal) and by making sure the cabinet is solidly grounded. If TV interference persists, make sure the television (and all affected RF appliances) are moved away from the furnace. Also make sure affected appliances are connected to a separate electrical circuit.

C- Heating Components

1. Ignitor

The ignitor is made of durable silicon nitride. Ignitor longevity is enhanced by controlling voltage to the ignitor. The integrated control provides a regulated 120 volts to the ignitor for a consistent ignition and long ignitor life. Ohm value should be 39 to 70. See FIGURE 15 for ignitor location and FIGURE 16 for ignitor check out.

NOTE - *The ML297DFVK(X) furnace contains electronic components that are polarity sensitive. Make sure that the furnace is wired correctly and is properly grounded.*

2. Flame Sensor

A flame sensor is located on the left side of the burner support. See figure 15. The sensor tip protrudes into the flame envelope of the left-most burner. The sensor can be removed for service without removing any part of the burners. During operation, flame is sensed by current passed through the flame and sensing electrode. The SureLight control allows the gas valve to remain open as long as flame signal is sensed. See TABLE 12 for flame signal.

TABLE 12

Flame Signal in Microamps

Normal	Low	Drop Out
1.5 or greater	1.0 or less	0.5

3. Gas Valve

The valve (FIGURE 52) is internally redundant to assure safety shut-off. If the gas valve must be replaced, the same type valve must be used.

24VAC terminals and gas control knob are located on the valve. A wire harness connects the terminals from the gas valve to the electronic ignition control. 24V applied to the terminals energizes the valve.

Inlet and outlet pressure taps are located on the valve. A regulator adjustment screw is located on the valve

LPG change over kits are available from Lennox. Kits include burner orifices and a gas valve.

4. Flame Rollout Switches (S47)

Flame rollout switch is a high temperature limit located on top of the burner box, one on each side.- See FIGURE 15. The limit is a N.C. SPST manual-reset limit. When S47 senses rollout, the circuit breaks and the ignition control immediately stops ignition and closes the gas valve. Rollout can be caused by a blocked heat exchanger, flue or lack of combustion air. The switch is factory set to trip (open) at 210°F and cannot be adjusted. The switch can be manually reset. To manually reset a tripped switch, push the reset button located on the control.

5. Burners

All units use inshot burners. Burners are factory set and require no adjustment. Always operate the unit with the burner box front panel in place. Each burner uses an orifice that is precisely matched to the burner input. Burners can be removed as a one piece assembly for service. If burner assembly has been removed, it is critical to align center of each burner to the center of the clamshell when re-installing.

6. Primary Limit Control (S10)

The primary limit (S10) is located in the heating vestibule panel. When excess heat is sensed in the heat exchanger, the limit will open. If the limit is open, the furnace control energizes the supply air blower and closes the gas valve. The limit automatically resets when unit temperature returns to normal. The switch must reset within three minutes or the SureLight control will go into Watch guard for one hour. The switch is factory set and cannot be adjusted. The switch may have a different set point for each unit model number. See Lennox Repair Parts Handbook if limit switch must be replaced.

Primary Limit Control (S10)

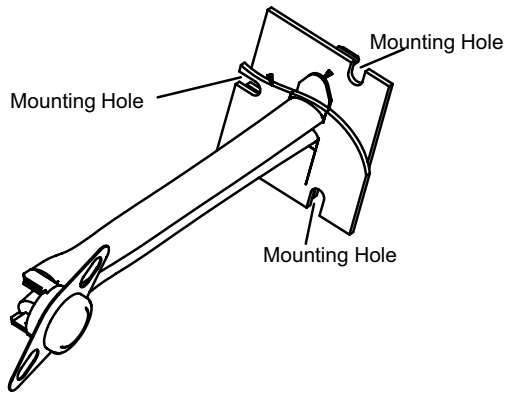

FIGURE 14

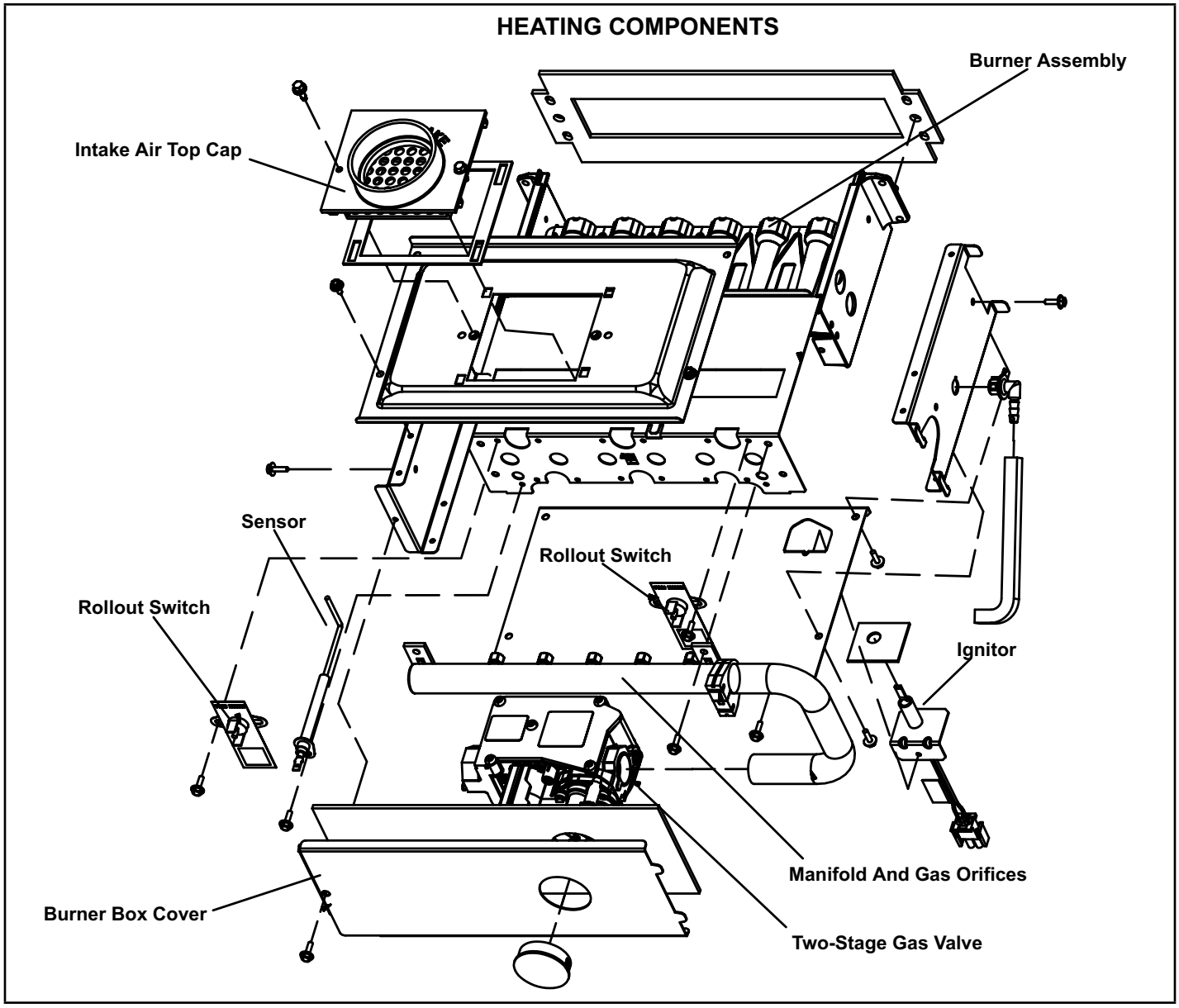
HEATING COMPONENTS
Burner Assembly
Intake Air Top Cap
Sensor
Rollout Switch
Rollout Switch
Ignitor
Manifold And Gas Orifices
Burner Box Cover
Two-Stage Gas Valve

FIGURE 15

Ignitor Check

Test 1
Check ignitor circuit for correct resistance.
Remove HSI/CAI 5-pin plug from control.
Check ohms reading across terminals 1 and 5.
Reading should be between 39 and 70 ohms. If value is correct, this is the only test needed.
If the reading on the meter is not correct, (0 or infinity) then a second test is needed.

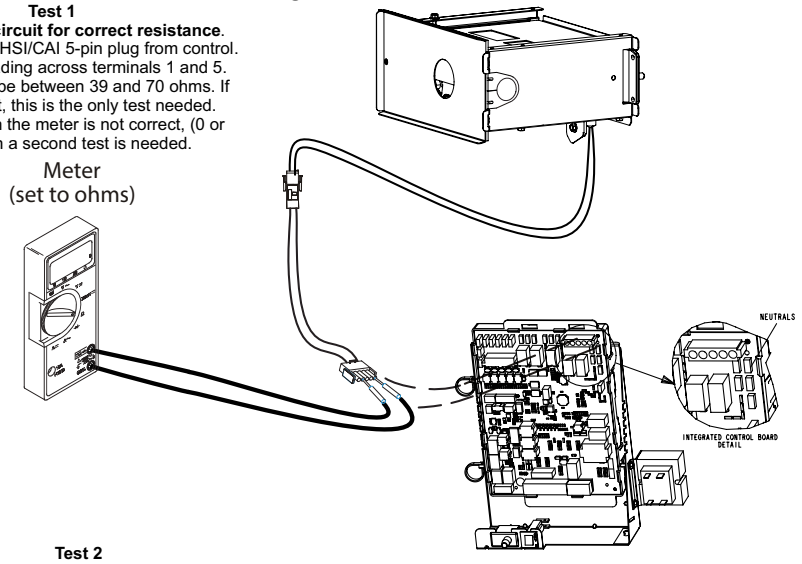

Test 2
Check ignitor for correct resistance.
Seperate the 2-pin jack-plug near the manifold and check resistance of ignitor at the plug. Reading should be between 39 and 70 ohms. If the reading is correct, then the problem is with the wiring between the jack-plug and the control. If reading is not correct, the issue is the ignitor.

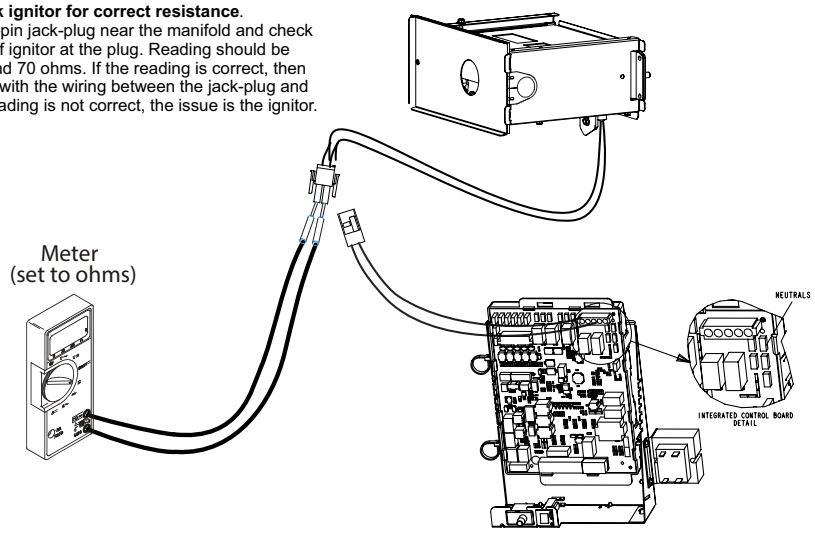

Test 3
Check ignitor for correct voltage
Insert meter probes into terminals 1 and 5 (use small diameter probes in order not to damage plug).
Check voltage during 20 second ignitor warm up period.
Voltage should read 120 volts ± 10%. If voltage reads below these values, check for correct supply voltage to furnace.

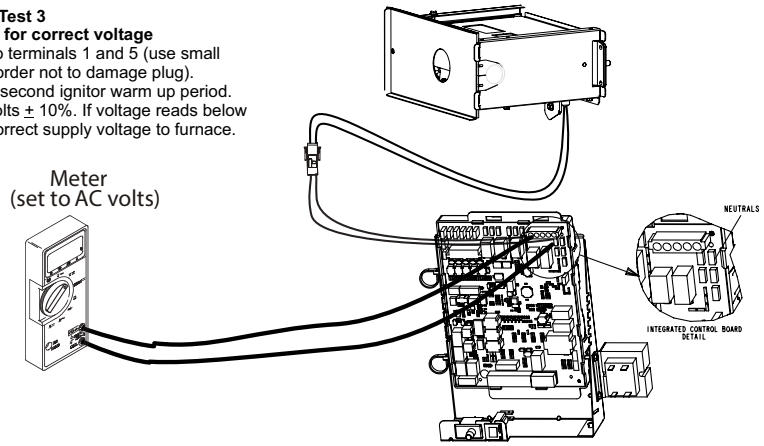

FIGURE 16

7. Combustion Air Inducer (B6) and Cold End Header Box

All ML297DFVK(X) units use a two-stage combustion air inducer to move air through the burners and heat exchanger during heating operation. The blower uses a 120VAC motor.

The motor operates during all heating operation and is controlled by integrated control control A92. The inducer also operates for 15 seconds before burner ignition (prepurge) and for 5 seconds after the gas valve closes (postpurge). The inducer operates on low speed during firststage heat, then switches to high speed for second stage heat.

NOTE - *Each furnace model uses a unique CAI. Refer to Lennox Repair Parts listing for correct inducer for replacement.*

The combustion air inducer is installed on the cold end header box. The cold end header box is a single piece made of hard plastic. The box has an internal channel where the combustion air inducer creates negative pressure at unit start up. The channel contains an orifice used to regulate flow created by the combustion air inducer.

The box has pressure taps for the combustion air inducer pressure switch hoses. The pressure switch measures the pressure differential across the combustion air inducer orifice or difference in the channel and the box. If replacement is necessary the gaskets used to seal the box to the vestibule panel and the combustion air inducer to the box, must also be replaced.

A proving switch connected to the combustion air inducer orifice plate is used to prove inducer operation. The combustion air inducer orifice will be different for each model. See TABLE 13 for orifice sizes. The pressure switch measures the pressure differential across the combustion air inducer orifice. When the proving switch opens, the furnace control (A92) immediately closes the gas valve to prevent burner operation.

TABLE 13

ML297DFVK(X) Unit	C.A.I. Orifice Size
-070	0.810
-090	0.920
-110	1.070

8. Combustion Air Inducer Pressure Switch (S18)

ML297DFVK(X) series units are equipped with a dual combustion air pressure switch (first and second stage) located on the combustion air inducer orifice bracket. See FIGURE 17. The switch is connected to the combustion air inducer housing by means of a flexible silicone hose. It monitors negative air pressure in the combustion air inducer housing.

The switches are a single-pole single-throw proving switch electrically connected to the integrated control. The purpose of the switch is to prevent burner operation if the combustion air inducer is not operating or if the flue becomes obstructed.

On heat demand (first or second stage) the switch senses that the combustion air inducer is operating. It closes a circuit to the integrated control when pressure inside the combustion air inducer decreases to a certain set point. Set points vary depending on unit size. See TABLE 14. The pressure sensed by the switch is negative relative to atmospheric pressure. If the flue becomes obstructed during operation, the switch senses a loss of negative pressure (pressure becomes more equal with atmospheric pressure) and opens the circuit to the furnace control and gas valve. A bleed port on the switch allows relatively dry air in the vestibule to purge switch tubing, to prevent condensate build up.

COMBUSTION AIR PRESSURE SWITCH

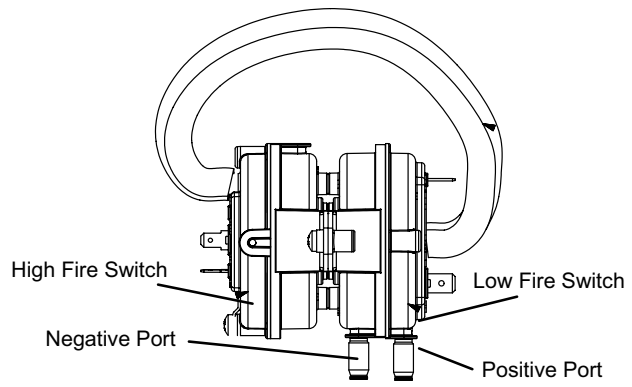

FIGURE 17

NOTE - *The switch is factory set and is not field adjustable. It is a safety shut-down control in the furnace and must not be by-passed for any reason. If switch is closed or bypassed, the control will not initiate ignition at start up.*

TABLE 14

ML297DFVK (X) Unit	Set Point Low Heat	Set Point High Heat
-070	0.50	0.90
-090	0.45	0.90
-110	0.60	1.15

Pressure Switch Check

To check pressure switch differential, refer to and use the provided fittings and tubing to follow the steps below.

1 - Remove thermostat demand and allow unit to cycle off.

2 - Remove the tubing from the negative side (red and black or red) and positive side (black) of the pressure switch (leave both connected to cold end header box).

3 - Take the 2” length square tubing and connect to the positive (+) side of the pressure switch. Take the 10” length square tubing and tee into the tubing from the positive side of the cold end header box and the other side of the 2” square tubing. Connect the other end of the 10” square tubing the the positive (+) side of the measuring device.

4 - Take a second piece the 2” length square tubing and connect to the negative (-) side of the pressure switch. Take a second piece of 10” length square tubing and tee into the tubing from the negative (-) side of the cold end header box and the other side of the 2” square tubing. Connect the other end of the 10” square tubing the the negative (-) side of the measuring device.

5 - Operate unit and observe manometer reading. Readings will change as heat exchanger warms.

a. Take one reading immediately after start-up.

b. Take a second reading after unit has reached steady state (approximately 5 minutes). This will be the pressure differential.

The pressure differential should be at least 0.15” greater than those listed in the table 8. Readings in table are the set points or “break points”.

6 - Remove thermostat demand and allow to cycle off.

7 - Replace original pressure switch tubing.

NOTE - *Pressure differential values (set point) in table are the ”break”, or ”open” specifications. ”Make”, or ”close” pressure differentials are 0.15” greater than the set points listed in table.*

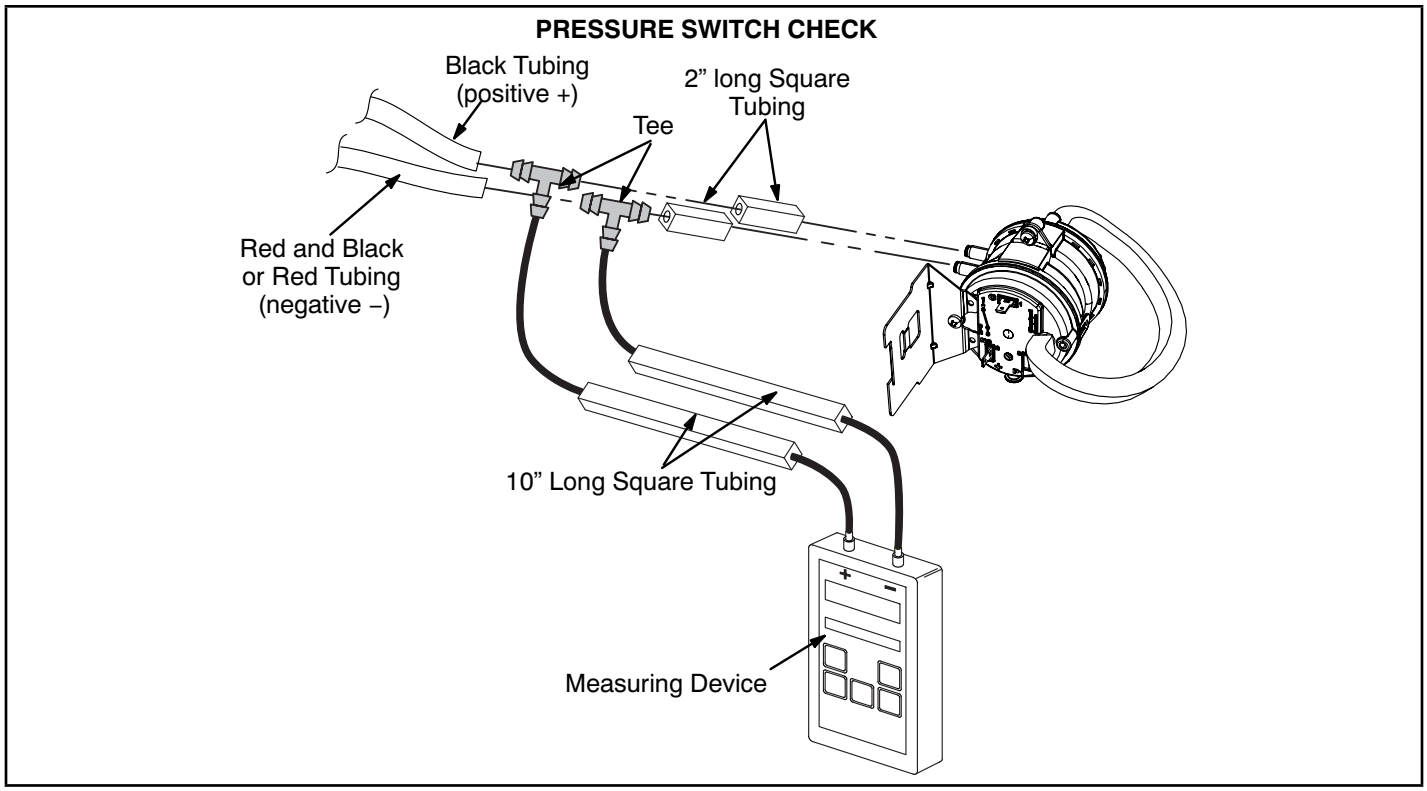

FIGURE 18

Pipe & Fittings Specifications

All pipe, fittings, primer and solvent cement must conform with American National Standard Institute and the American Society for Testing and Materials (ANSI/ASTM) standards. The solvent shall be free flowing and contain no lumps, undissolved particles or any foreign matter that adversely affects the joint strength or chemical resistance of the cement. The cement shall show no gelation, stratification, or separation that cannot be removed by stirring. Refer to the TABLE 15 for approved piping and fitting materials.

⚠ CAUTION

Solvent cements for plastic pipe are flammable liquids and should be kept away from all sources of ignition. Do not use excessive amounts of solvent cement when making joints. Good ventilation should be maintained to reduce fire hazard and to minimize breathing of solvent vapors. Avoid contact of cement with skin and eyes.

TABLE 15

PIPING AND FITTINGS SPECIFICATIONS

Schedule 40 PVC (Pipe)	D1785
Schedule 40 PVC (Cellular Core Pipe)*	F891
Schedule 40 PVC (Fittings)	D2466
Schedule 40 CPVC (Pipe)	F441
Schedule 40 CPVC (Fittings)	F438
SDR-21 PVC or SDR-26 PVC (Pipe)	D2241
SDR-21 CPVC or SDR-26 CPVC (Pipe)	F442
Schedule 40 ABS Cellular Core DWV (Pipe)*	F628
Schedule 40 ABS (Pipe)	D1527
Schedule 40 ABS (Fittings)	D2468
ABS-DWV (Drain Waste & Vent) (Pipe & Fittings)	D2661
PVC-DWV (Drain Waste & Vent) Pipe & Fittings)	D2665
PRIMER & SOLVENT CEMENT	**ASTM SPECIFICATION**
PVC & CPVC Primer	F656
PVC Solvent Cement	D2564
CPVC Solvent Cement	F493
ABS Solvent Cement	D2235
PVC/CPVC/ABS All Purpose Cement For Fittings & Pipe of the same material	D2564, D2235, F493
ABS to PVC or CPVC Transition Solvent Cement	D3138

* Not approved as of 12-1-2022

TABLE 15 Continued

CANADA PIPE & FITTING & SOLVENT CEMENT	**MARKING**
PVC & CPVC Pipe and Fittings	ULCS636
PVC & CPVC Solvent Cement	
ABS to PVC or CPVC Transition Cement	
POLYPROPYLENE VENTING SYSTEM	
PolyPro® by Duravent	
InnoFlue® by Centrotherm	
ECCO Polypropylene Vent™	
UL 1738 CERTIFIED GAS VENTING SYSTEM	
IPEX System1738 Schedule 40 PVC Pipes and Fittings	UL 1738
IPEX System1738 PVC FGV Cement & Primer	
POLYPROPYLENE VENTING SYSTEM	
InnoFlue® by Centrotherm	

⚠ IMPORTANT

Exhaust and intake connections are made of PVC. Use PVC primer and solvent cement when using PVC vent pipe. When using ABS vent pipe, use transitional solvent cement to make connections to the PVC fittings in the unit.

Use PVC primer and solvent cement or ABS solvent cement meeting ASTM specifications, refer to Table 9. As an alternate, use all purpose cement, to bond ABS, PVC, or CPVC pipe when using fittings and pipe made of the same materials. Use transition solvent cement when bonding ABS to either PVC or CPVC.

Low temperature solvent cement is recommended during cooler weather. Metal or plastic strapping may be used for vent pipe hangers. Uniformly apply a liberal coat of PVC primer for PVC or use a clean dry cloth for ABS to clean inside socket surface of fitting and male end of pipe to depth of fitting socket.

Canadian Applications Only - *Pipe, fittings, primer and solvent cement used to vent (exhaust) this appliance must be certified to ULC S636 and supplied by a single manufacturer as part of an approved vent (exhaust) system. In addition, the first three feet of vent pipe from the furnace flue collar must be accessible for inspection.*

Venting Options

The ML297DFVK(X) is shipped with vent exhaust / air intake connection at the top cap. See figure 15. Using parts provided, the furnace may be field modified to have these connections on the right side of the furnace cabinet. See FIGURE 21 and follow the steps below. For left side venting order kit 87W73.

1 - Remove inner blower door.

2 - Loosen hose clamps which attach rubber fittings to the white PVC pipes inside the vestibule area. See FIGURE 19.

3 - Loosen the clamp which secures the pipes at the blower deck. See FIGURE 19.

4 - Remove white PVC pipes, slide up and out thru the top cap.

5 - Remove the black plastic fitting in top cap which previously aligned the PVC pipes.

6 - Remove the remaining parts of the pipe clamp at the blower deck.

7 - Remove the sheet metal patch plate on the side of the cabinet which covers the openings for side venting option. Save screws for reuse.

8 - Re-use the patch plate to cover the hole in the top cap. See FIGURE 20. Remove the 2 screws which secure the top cap to the furnace on the right side and re-install securing the right edge of the patch plate and the right side of the top cap to the furnace. Use 2 self-drilling sheet metal screws (provided) to finish securing the left edge of the patch plate on the left side.

9 - Use a utility knife to cut out the cabinet insulation for the right side vent / air intake.

10 - Install the two 90° street elbows (provided) through the side of the cabinet. The male side of each elbow should extend down through the blower deck and connect to the rubber fittings below. Once the elbows are properly positioned, tighten each clamp.

11 - Peel protective backing from side vent sealing gaskets (2) and apply to side vent sealing plates (2) as shown in FIGURE 21.

12 - Install the side vent sealing plates and gaskets on the exterior of the cabinet as shown in FIGURE 21. Secure with six mounting screws (four reused and two provided from bag assembly). Holes are pre-punched in the parts and cabinet, no drilling is required.

13 - Install sheet metal screws (provided) to seal extra two holes in cabinet not used with side vent clamps.

⚠ IMPORTANT

Side vent sealing plates and side vent sealing gaskets must be used when converting to right side venting. Failure to use gaskets and plates may lead to improper operation of unit.

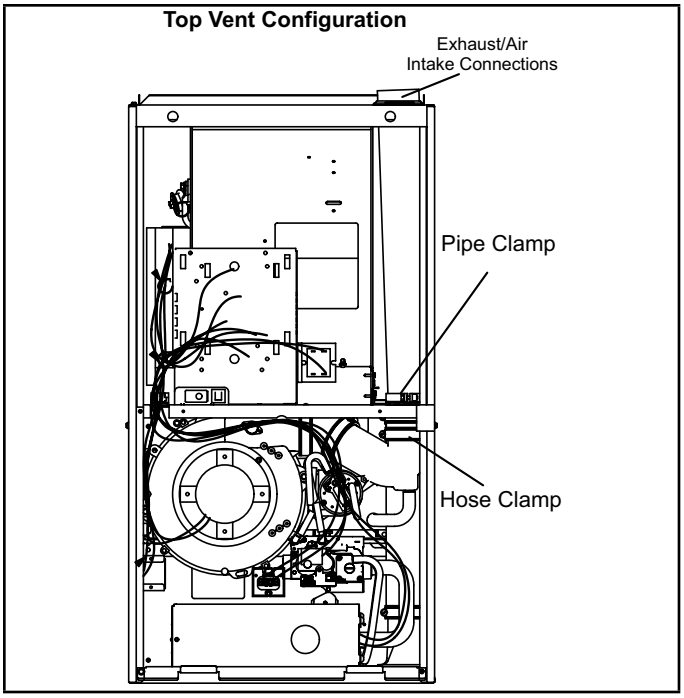

FIGURE 19

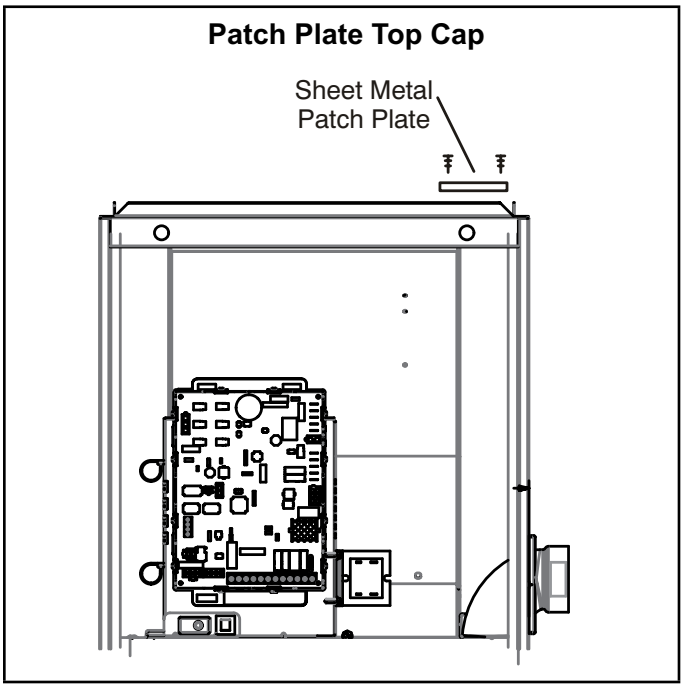

FIGURE 20

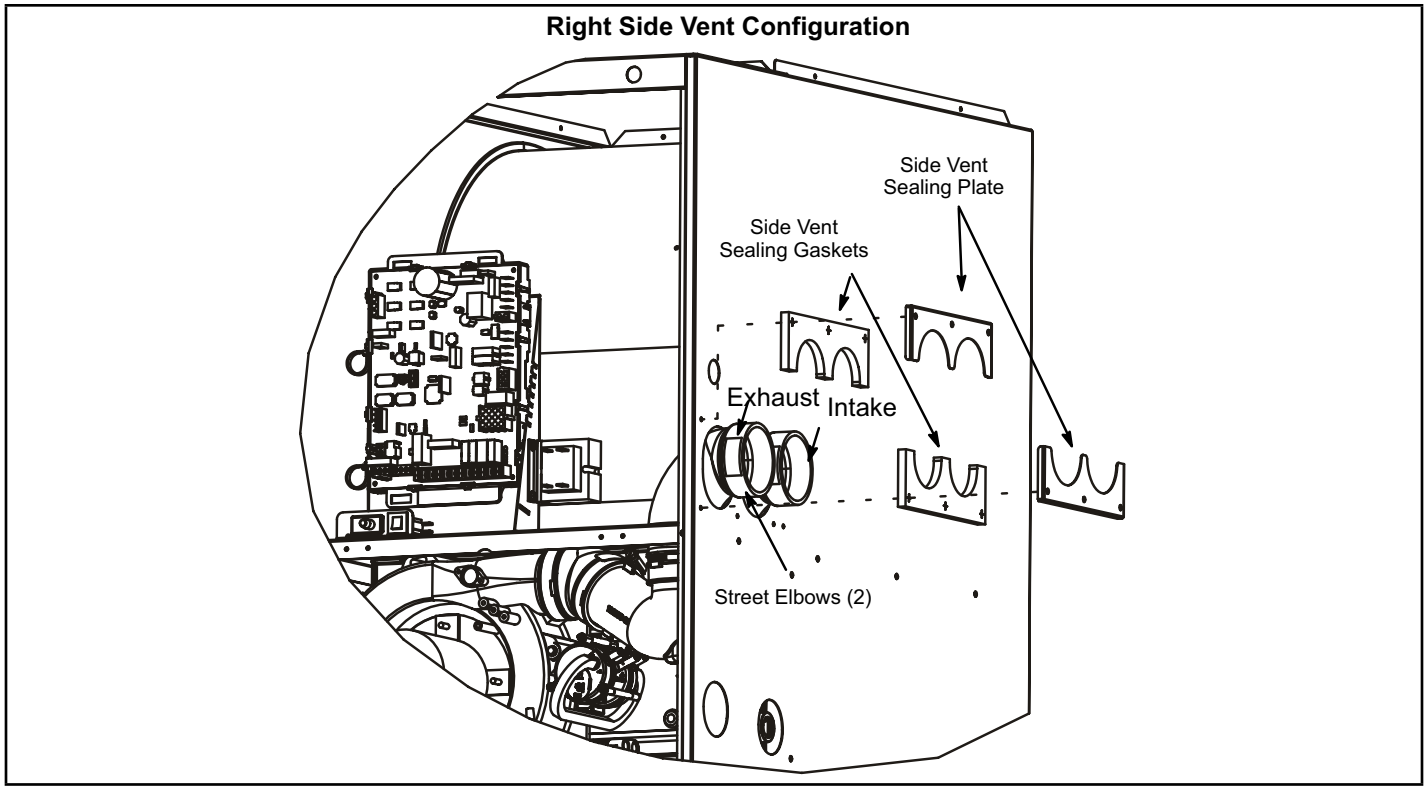
Right Side Vent Configuration
Side Vent
Sealing Plate
Side Vent
Sealing Gaskets
Exhaust
Intake
Street Elbows (2)

FIGURE 21

TABLE 16

OUTDOOR TERMINATION USAGE*

Input Size	Vent Pipe Dia. in.	STANDARD				CONCENTRIC		
		Flush Mount Kit	Wall Kit		Field Fabricated	1-1/2 inch	2 inch	3 inch
			2 inch	3 inch				
		51W11 (US) 51W12 (CA)	22G44 (US) 30G28 (CA)	44J40 (US) 81J20 (CA)		71M80 (US) 44W92 (CA)	69M29 (US) 44W92 (CA)	60L46 (US) 44W93 (CA)
070	[6]1-1/2	[3]YES	YES	[1]YES	[5]YES	[2] YES	N/A	N/A
	2	[3]YES	YES	[1]YES	[5]YES	[2] YES		
	2-1/2	[3]YES	YES	[1]YES	[5]YES	[2] YES		
	3	[3]YES	YES	[1]YES	[5]YES	[2] YES		
090	2	[3]YES	N/A	YES	[5]YES	N/A	YES	YES
	2-1/2	[3]YES		YES	[5]YES		YES	YES
	3	[3]YES		YES	[5]YES		YES	YES
110	2	YES		YES	[5]YES		YES	YES
	2-1/2	YES		YES	[5]YES		YES	YES
	3	YES		YES	[5]YES		YES	YES

NOTE - Standard Terminations do not include any vent pipe or elbows external to the structure. Any vent pipe or elbows external to the structure must be included in total vent length calculations. See vent length tables.

* Kits must be properly installed according to kit instructions.

[1]Requires field-provided outdoor 1-1/2” exhaust accelerator.

[2]Concentric kits 71M80 and 44W92 include 1-1/2” outdoor accelerator, when used with 045 and 070 input models. 1-1/2 in pipe must transition to 2 in pipe when used with a concentric kit.

[3] Flush mount kits 51W11 and 51W12 includes 1-1/2 in. outdoor exhaust accelerator, required when used with 045, 070 and 090 input models. 1-1/2 in pipe must transition to 2 in pipe when used with the flushmount kit.

[4] Termination kits 30G28, 44W92, 44W93 and 81J20 are certified to ULC S636 for use in Canada only.

[5] See TABLE 21 for vent accelerator requirements.

[6] 2 in to 1-1/2 in reducer required must be field provided.

Joint Cementing Procedure

All cementing of joints should be done according to the specifications outlined in ASTM D 2855.

NOTE - *A sheet metal screw may be used to secure the intake pipe to the connector, if desired. Use a drill or self tapping screw to make a pilot hole.*

⚠ DANGER

DANGER OF EXPLOSION!

Fumes from PVC glue may ignite during system check. Allow fumes to dissipate for at least 5 minutes before placing unit into operation.

1 - Measure and cut vent pipe to desired length.

2 - Debur and chamfer end of pipe, removing any ridges or rough edges. If end is not chamfered, edge of pipe may remove cement from fitting socket and result in a leaking joint.

NOTE - *Check the inside of vent pipe thoroughly for any obstruction that may alter furnace operation.*

3 - Clean and dry surfaces to be joined.

4 - Test fit joint and mark depth of fitting on outside of pipe.

5 - Uniformly apply a liberal coat of PVC primer for PVC or use a clean dry cloth for ABS to clean inside socket surface of fitting and male end of pipe to depth of fitting socket.

6 - Promptly apply solvent cement to end of pipe and inside socket surface of fitting. Cement should be applied lightly but uniformly to inside of socket. Take care to keep excess cement out of socket. Apply second coat to end of pipe.

NOTE - *Time is critical at this stage. Do not allow primer to dry before applying cement.*

7 - Immediately after applying last coat of cement to pipe, and while both inside socket surface and end of pipe are wet with cement, forcefully insert end of pipe into socket until it bottoms out. Turn PVC pipe 1/4 turn during assembly (but not after pipe is fully inserted) to distribute cement evenly. DO NOT turn ABS or cellular core pipe.

NOTE - *Assembly should be completed within 20 seconds after last application of cement. Hammer blows should not be used when inserting pipe.*

8 - After assembly, wipe excess cement from pipe at end of fitting socket. A properly made joint will show a bead around its entire perimeter. Any gaps may indicate an improper assembly due to insufficient solvent.

9 - Handle joints carefully until completely set.

Venting Practices

NOTE - *For any Low GWP refrigerant systems with exposed line set joints installed in the same space, each non-direct vent furnace system must have a refrigerant detection sensor installed below the level of the burners (see Secondary Sensor Requirements on page 56. Any direct vent furnace system is not subject to this requirement.*

1 - In areas where piping penetrates joists or interior walls, hole must be large enough to allow clearance on all sides of pipe through center of hole using a hanger.

2 - When furnace is installed in a residence where unit is shut down for an extended period of time, such as a vacation home, make provisions for draining condensate collection trap and lines.

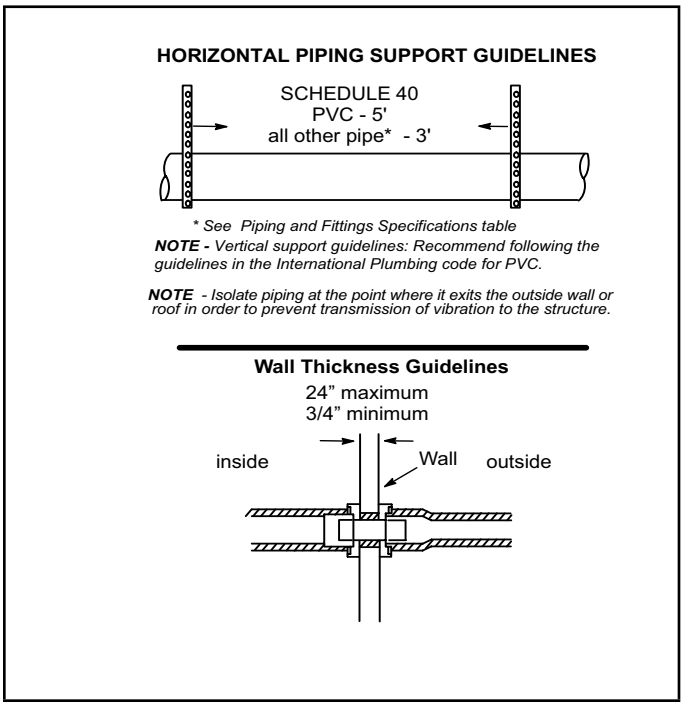

FIGURE 22

Removal of the Furnace from Common Vent

In the event that an existing furnace is removed from a venting system commonly run with separate gas appliances, the venting system is likely to be too large to properly vent the remaining attached appliances. Conduct the following test while each appliance is operating and the other appliances (which are not operating) remain connected to the common venting system. If the venting system has been installed improperly, you must correct the system as indicated in the general venting requirements section.

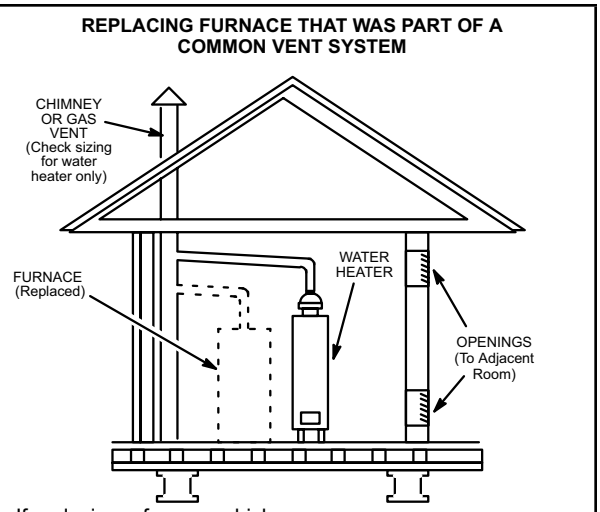

If replacing a furnace which was commonly vented with another gas appliance, the size of the existing vent pipe for that gas appliance must be checked. Without the heat of the original furnace flue products, the existing vent pipe is probably oversized for the single water heater or other appliance. The vent should be checked for proper draw with the remaining appliance.

FIGURE 23

⚠ WARNING

CARBON MONOXIDE POISONING HAZARD

Failure to follow the steps outlined below for each appliance connected to the venting system being placed into operation could result in carbon monoxide poisoning or death.

The following steps shall be followed for each appliance connected to the venting system being placed into operation, while all other appliances connected to the venting system are not in operation:

1 - Seal any unused openings in the common venting system.

2 - Inspect the venting system for proper size and horizontal pitch. Determine that there is no blockage, restriction, leakage, corrosion, or other deficiencies which could cause an unsafe condition.

3 - Close all building doors and windows and all doors between the space in which the appliances remaining connected to the common venting system are located and other spaces of the building. Turn on clothes dryers and any appliances not connected to the common venting system.Turn on any exhaust fans, such as range hoods and bathroom exhausts, so they will operate at maximum speed. Do not operate a summer exhaust fan. Close fireplace dampers.

4 - Follow the lighting instructions. Turn on the appliance that is being inspected. Adjust the thermostat so that the appliance operates continuously.

5 - After the main burner has operated for 5 minutes, test for leaks of flue gases at the draft hood relief opening. Use the flame of a match or candle.

6 - After determining that each appliance connected to the common venting system is venting properly, (step 3) return all doors, widows, exhaust fans, fireplace dampers, and any other gas-burning appliances to their previous mode of operation.

7 - If a venting problem is found during any of the preceding tests, the common venting system must be modified to correct the problem.

Resize the common venting system to the minimum vent pipe size determined by using the appropriate tables in Appendix G. These are in the current standards of the National Fuel Gas Code ANSI Z223.1.

Exhaust Piping (FIGURE 25 and FIGURE 26)

Route piping to outside of structure. Continue with installation following instructions given in piping termination section.

⚠ WARNING

Carbon Monoxide Poisoning Hazard

Cutting or altering exhaust or air intake pipes, which are located in the blower compartment, could result in Carbon Monoxide Poisoning or Death.

⚠ CAUTION

Do not discharge exhaust into an existing stack or stack that also serves another gas appliance. If vertical discharge through an existing unused stack is required, insert PVC pipe inside the stack until the end is even with the top or outlet end of the metal stack.

⚠ CAUTION

The exhaust vent pipe operates under positive pressure and must be completely sealed to prevent leakage of combustion products into the living space.

Vent Piping Guidelines

NOTE - *Lennox has approved the use of DuraVent® and Centrotherm manufactured vent pipe and terminations as an option to PVC. When using the PolyPro® by DuraVent or InnoFlue® by Centrotherm venting system the vent pipe requirements stated in the unit installation instruction – minimum & maximum vent lengths, termination clearances, etc. – apply and must be followed. Follow the instructions provided with PoyPro by DuraVent and InnoFlue by Centrotherm venting system for assembly or if requirements are more restrictive. The PolyPro by Duravent and InnoFlueby Centrotherm venting system must also follow the uninsulated and unconditioned space criteria listed in TABLE 19.*

The ML297DFVK(X) can be installed as either a Non-Direct Vent or a Direct Vent gas central furnace.

NOTE - *In Non-Direct Vent installations, combustion air is taken from indoors or ventilated attic or crawlspace and flue gases are discharged outdoors. In Direct Vent installations, combustion air is taken from outdoors and flue gases are discharged outdoors.*

Intake and exhaust pipe sizing -- Size pipe according to TABLE 17 (minimum length permitted) and TABLE 18 (maximum length permitted). Count all elbows inside and outside the home.

TABLE 17

MINIMUM VENT PIPE LENGTHS

ML297DFVK(X) MODEL	MIN. VENT LENGTH*
070, 090, 110	15 ft or 5ft plus 2 elbows or 10 ft plus 1 elbow

*Any approved termination may be added to the minimum length listed. Two 45 degree elbows are equivalent to one 90 degree elbow.

Regardless of the diameter of pipe used, the standard roof and wall terminations described in section Exhaust Piping Terminations should be used. Exhaust vent termination pipe is sized to optimize the velocity of the exhaust gas as it exits the termination. Refer to TABLE 21.

In some applications which permit the use of several different sizes of vent pipe, a combination vent pipe may be used. Contact Lennox' Application Department for assistance in sizing vent pipe in these applications.

⚠ IMPORTANT

Do not use screens or perforated metal in exhaust or intake terminations. Doing so will cause freeze-ups and may block the terminations.

NOTE - *It is acceptable to use any pipe size which fits within the guidelines allowed in TABLE 18.*

NOTE - *All horizontal runs of exhaust pipe must slope back toward unit. A minimum of 1/4" (6mm) drop for each 12" (305mm) of horizontal run is mandatory for drainage.*

NOTE - *Lennox offers a glueless vent adapter kit 17H92 as an option for exhaust exiting at the furnace top cap coupling.*

NOTE - *Exhaust pipe MUST be glued to furnace exhaust fittings.*

NOTE - *Exhaust piping should be checked carefully to make sure there are no sags or low spots.*

NOTE - *If right side venting option is used, you must include the elbow at the furnace in the elbow count. If transitioning to 3" dia pipe, this elbow equates to 20' of equivalent vent length for all models.*

Use the following steps to correctly size vent pipe diameter.

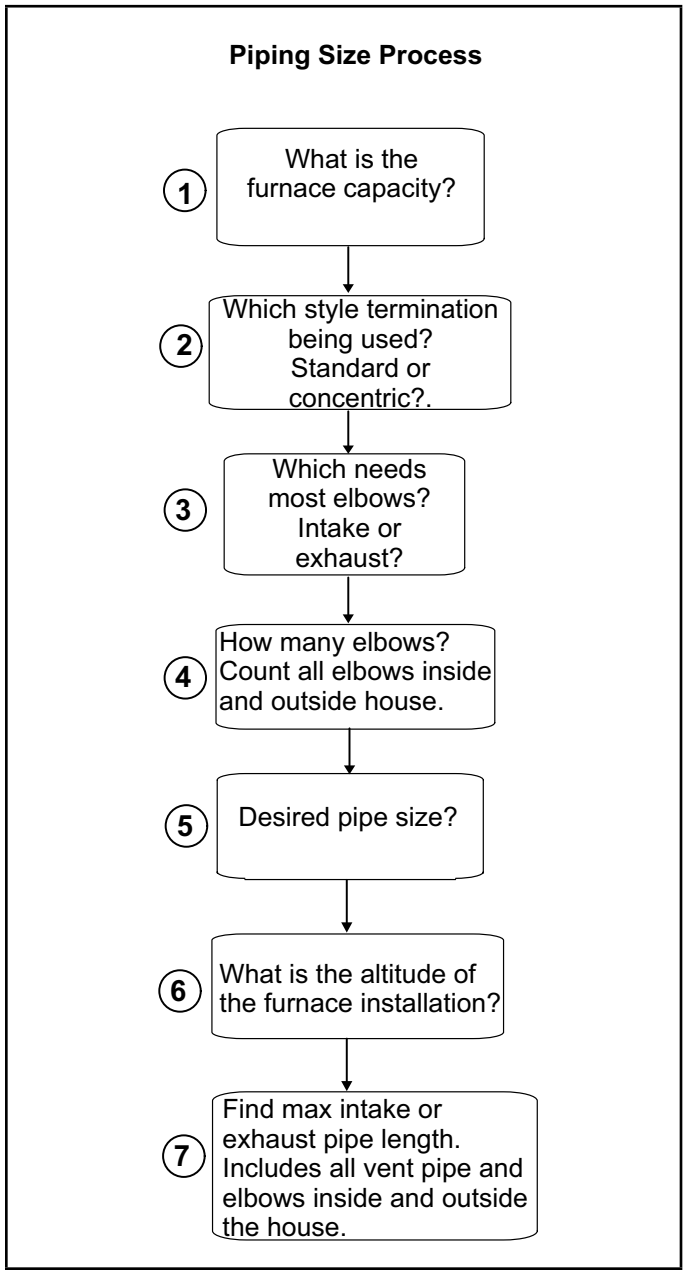

FIGURE 24

TABLE 18

Maximum Allowable Intake or Exhaust Vent Length

Size intake and exhaust pipe length separately. Values in table are for Intake OR Exhaust, not combined total. Both Intake and Exhaust must be same pipe size. NOTE - Additional vent pipe and elbows used to terminate the vent pipe outside the structure must be included in the total vent length calculation.

Standard Termination at Elevation 0 - 4500 ft												
Number Of 90° Elbows Used	1-1/2” Pipe			2” Pipe			2-1/2” Pipe			3” Pipe		
	Model			Model			Model			Model		
	070	090	110	070	090	110	070	090	110	070	090	110
1	15	n/a	n/a	51	29	9	100	78	43	122	103	103
2	10			46	24	n/a	95	73	38	117	98	98
3	n/a			41	19		90	68	33	112	93	93
4				36	14		85	63	28	107	88	88
5				31	9		80	58	23	102	83	83
6				26	n/a		75	53	18	97	78	78
7				21			70	48	13	92	73	73
8				16			65	43	8	87	68	68
9				11			60	38	n/a	82	63	63
10				6			55	33		77	58	58
Standard Termination Elevation 4501 - 10,000 ft												
Number Of 90° Elbows Used	1-1/2” Pipe			2” Pipe			2-1/2” Pipe			3’ Pipe		
	Model			Model			Model			Model		
	070	090	110	070	090	110	070	090	110	070	090	110
1	15	n/a	n/a	51	29	n/a	100	78	43	122	103	103
2	10			46	24		95	73	38	117	98	98
3	n/a			41	19		90	68	33	112	93	93
4				36	14		85	63	28	107	88	88
5				31	9		80	58	23	102	83	83
6				26	n/a		75	53	18	97	78	78
7				21			70	48	13	92	73	73
8				16			65	43	8	87	68	68
9				11			60	38	n/a	82	63	63
10				n/a			55	33		77	58	58

TABLE 18 CONT.

Maximum Allowable Intake or Exhaust Vent Length

Size intake and exhaust pipe length separately. Values in table are for Intake OR Exhaust, not combined total. Intake and Exhaust must be same size.
NOTE - Additional vent pipe and elbows used to terminate the vent pipe outside the structure must be included in the total vent length calculation.

Concentric Termination at Elevation 0 - 4500 ft

Number Of 90° Elbows Used	1-1/2” Pipe			2” Pipe			2-1/2” Pipe			3” Pipe		
	Model			Model			Model			Model		
	070	090	110	070	090	110	070	090	110	070	090	110
1	n/a	n/a	n/a	43	27	7	90	74	39	106	99	99
2				38	22	n/a	85	69	34	101	94	94
3				33	17		80	64	29	96	89	89
4				28	12		75	59	24	91	84	84
5				23	7		70	54	19	86	79	79
6				18	n/a		65	49	14	81	74	74
7				13			60	44	9	76	69	69
8				n/a			55	39	n/a	71	64	64
9							50	34		66	59	59
10							45	29		61	54	54

Concentric Termination Elevation 4501 - 10,000 ft

Number Of 90° Elbows Used	1-1/2”Pipe			2” Pipe			2-1/2” Pipe			3” Pipe		
	Model			Model			Model			Model		
	070	090	110	070	090	110	070	090	110	070	090	110
1	n/a	n/a	n/a	43	27	n/a	90	74	39	106	99	99
2				38	22		85	69	34	101	94	94
3				33	17		80	64	29	96	89	89
4				28	12		75	59	24	91	84	84
5				23	7		70	54	19	86	79	79
6				18	n/a		65	49	14	81	74	74
7				13			60	44	9	76	69	69
8				8			55	39	n/a	71	64	64
9				n/a			50	34		66	59	59
10							45	29		61	54	54

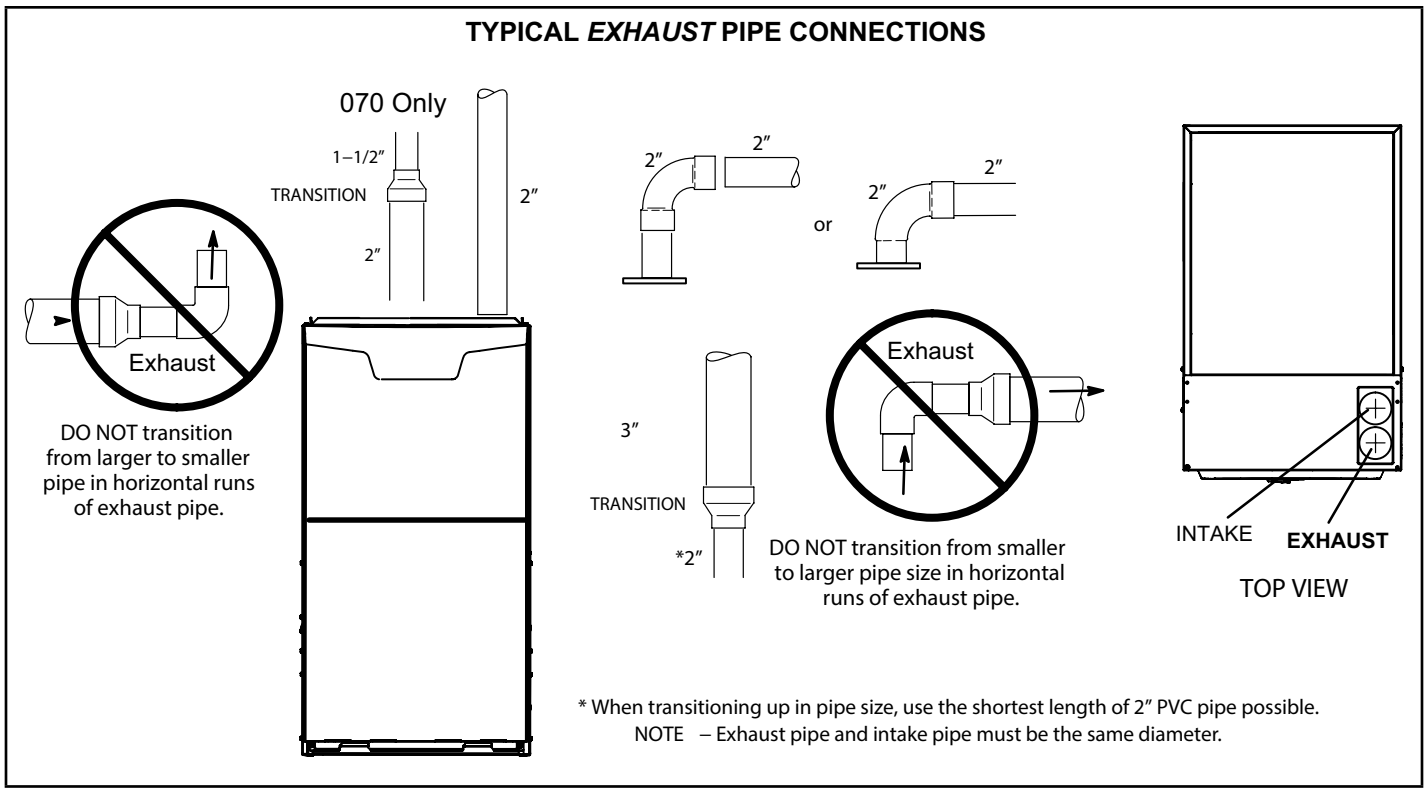

FIGURE 25

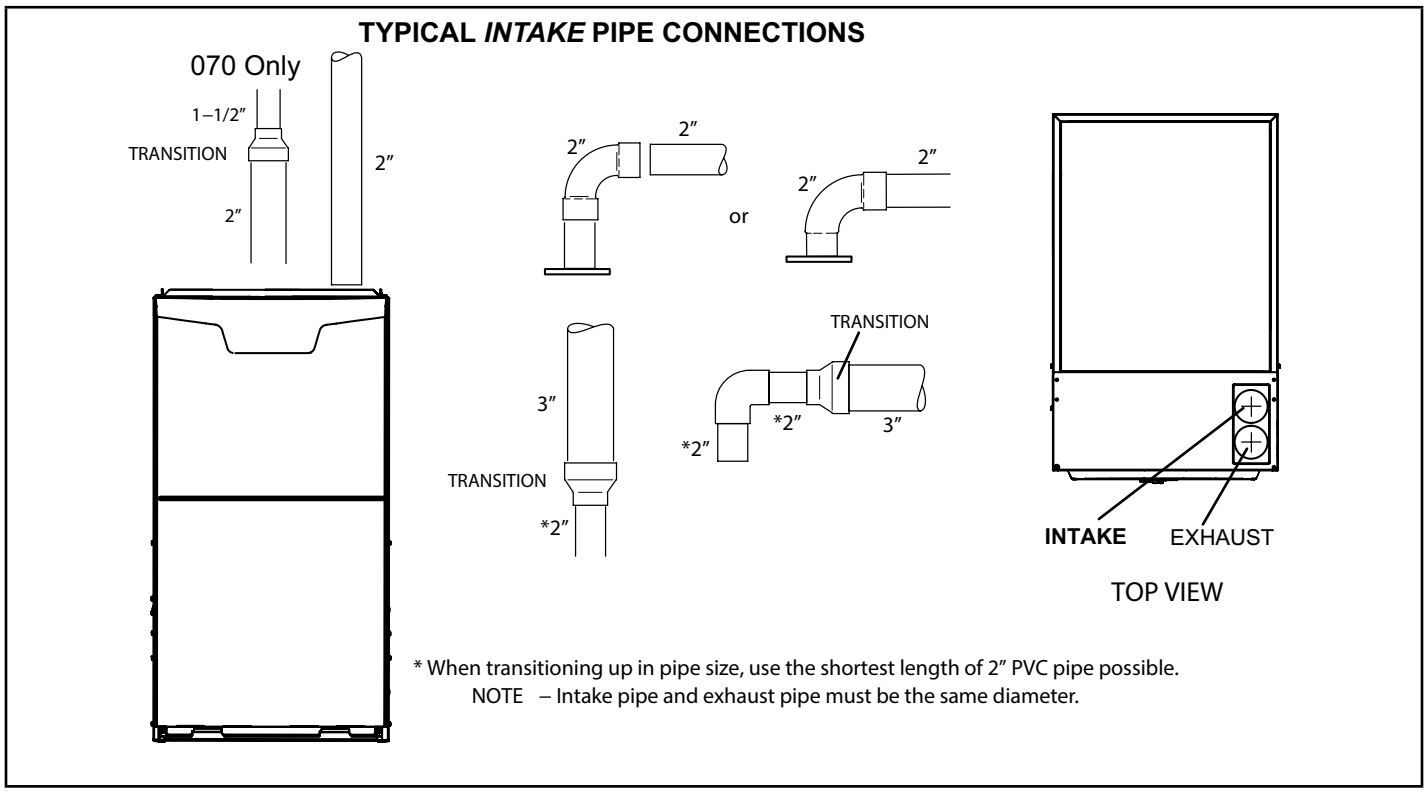

FIGURE 26

TYPICAL *EXHAUST* CONNECTIONS WITH RIGHT SIDE VENT OPTION

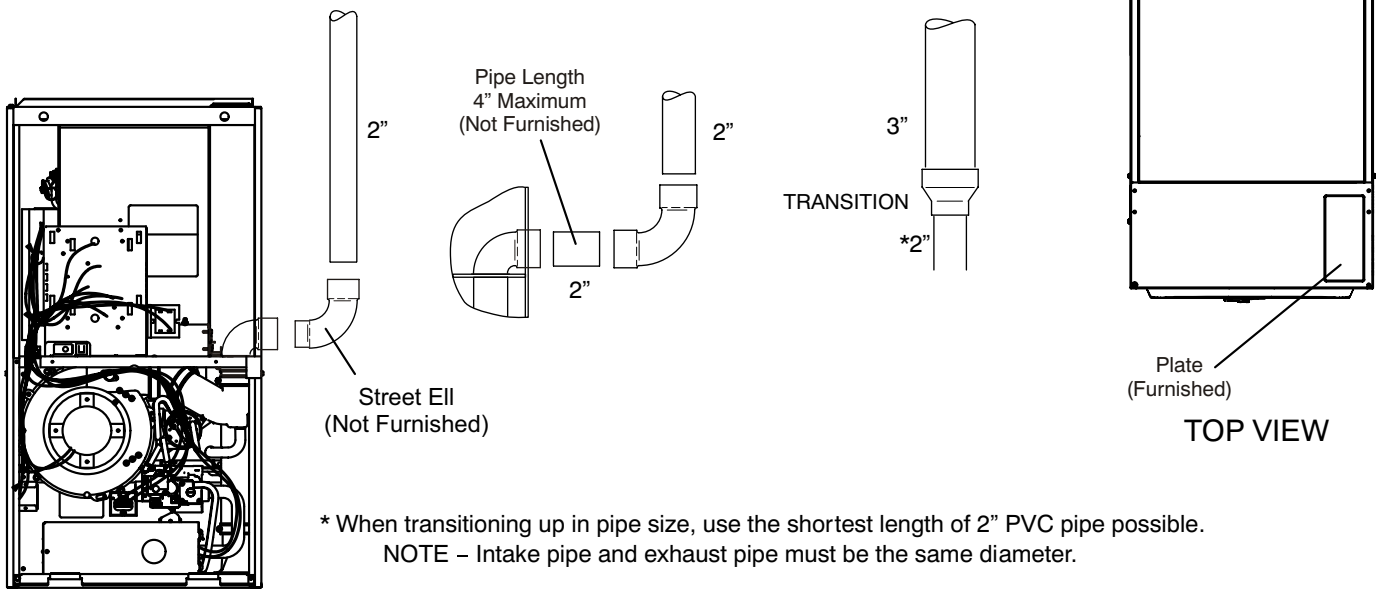

* When transitioning up in pipe size, use the shortest length of 2” PVC pipe possible.
NOTE – Intake pipe and exhaust pipe must be the same diameter.

Figure 27

TYPICAL *AIR INTAKE* PIPE CONNECTIONS WITH RIGHT SIDE VENT OPTION

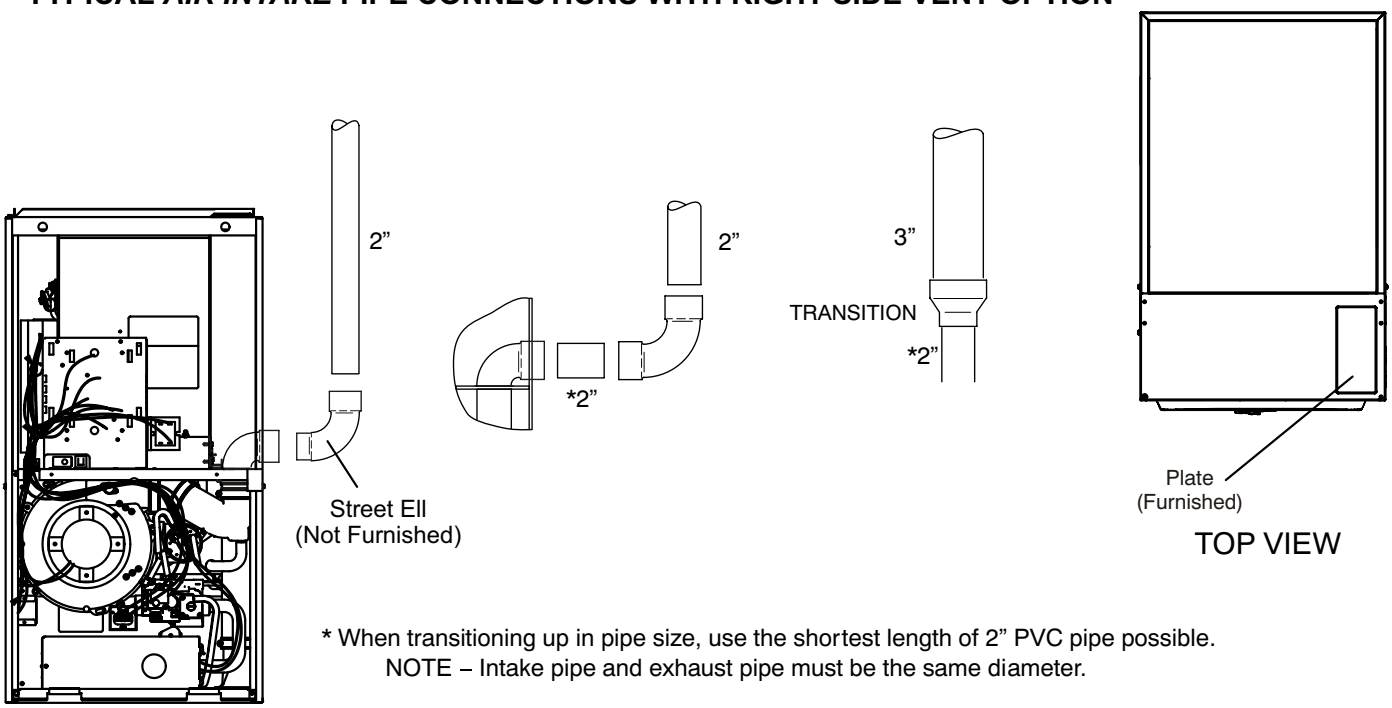

* When transitioning up in pipe size, use the shortest length of 2” PVC pipe possible.
NOTE – Intake pipe and exhaust pipe must be the same diameter.

Figure 28

Intake Piping

The ML297DFVK(X) furnace may be installed in either **direct vent** or **non-direct vent** applications. In non-direct vent applications, when intake air will be drawn into the furnace from the surrounding space, the indoor air quality must be considered. Guidelines listed in Combustion, Dilution and Ventilation Air section must be followed.

Follow the next two steps when installing the unit in Direct Vent applications, where combustion air is taken from outdoors and flue gases are discharged outdoors. The provided air intake screen must not be used in direct vent applications (outdoors).

1 - Use cement or a sheet metal screw to secure the intake pipe to the inlet air connector.

2 - If intake air is drawn from a ventilated crawlspace (FIGURE 29) or ventilated attic (FIGURE 30) the exhaust vent length must not exceed those listed in TABLE 20. If 3” diameter pipe is used, reduce to 2” diameter pipe to accommodate the debris screen.

3 - Route piping to outside of structure. Continue with installation following instructions given in general guide lines for piping terminations and intake and exhaust piping terminations for direct vent sections. Refer to TABLE 18 for pipe sizes.

⚠ CAUTION

If this unit is being installed in an application with combustion air coming in from a space serviced by an exhaust fan, power exhaust fan, or other device which may create a negative pressure in the space, take care when sizing the inlet air opening. The inlet air opening must be sized to accommodate the maximum volume of exhausted air as well as the maximum volume of combustion air required for all gas appliances serviced by this space.

EQUIPMENT IN CONFINED SPACE
(Inlet Air from Ventilated Crawlspace and Outlet Air to Outside)

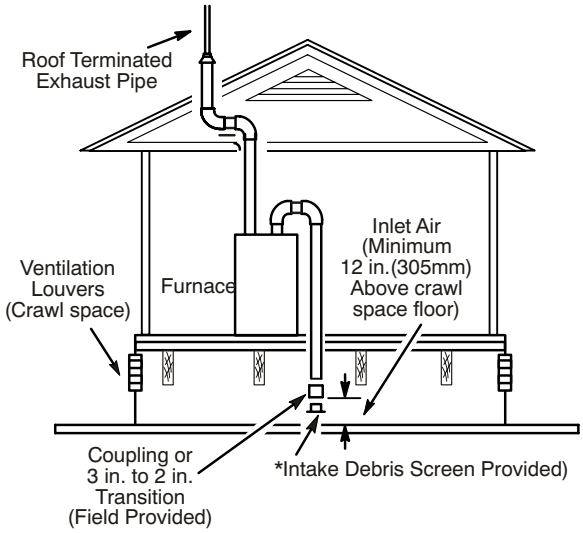

***NOTE**-The inlet and outlet air openings shall each have a free area of at least one square inch per 4,000 Btu (645mm^2 per 1.17kW) per hour of the total input rating of all equipment in the enclosure.*

FIGURE 29

EQUIPMENT IN CONFINED SPACE
(Inlet Air from Ventilated Attic and Outlet Air to Outside)

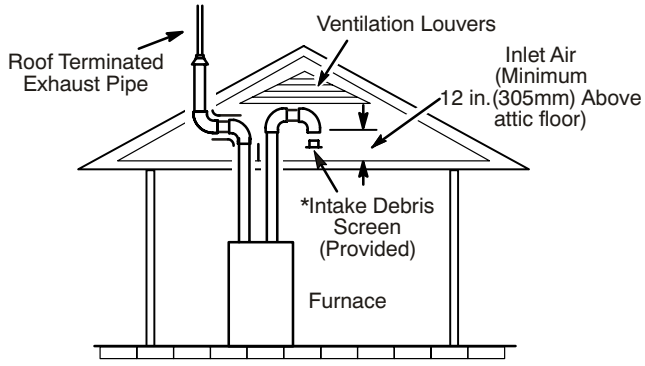

***NOTE**-The inlet and outlet air openings shall each have a free area of at least one square inch per 4,000 Btu (645mm^2 per 1.17kW) per hour of the total input rating of all equipment in the enclosure.*

FIGURE 30

TYPICAL AIR INTAKE PIPE CONNECTIONS
NON–DIRECT VENT APPLICATIONS

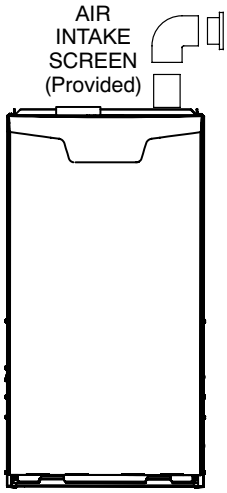

***NOTE** - Air intake screen and elbow may be rotated, so that screen may be positioned to face forward or to either side.*

FIGURE 31

Follow the next two steps when installing the unit in **Non-Direct Vent** applications where combustion air is taken from indoors and flue gases are discharged outdoors.

1 - Use field-provided materials and the factory-provided air intake screen to route the intake piping as shown in FIGURE 31. Maintain a minimum clearance of 3" (76mm) around the air intake opening. The air intake opening (with the protective screen) should always be directed forward, or sideways.

2 - Use cement to secure the intake pipe to the connector, if desired.

General Guidelines for Vent Terminations

In Non-Direct Vent applications, combustion air is taken from indoors and the flue gases are discharged to the outdoors. The ML297DFVK(X) is then classified as a non-direct vent, Category IV gas furnace.

In Direct Vent applications, combustion air is taken from outdoors and the flue gases are discharged to the outdoors. The ML297DFVK(X) is then classified as a direct vent, Category IV gas furnace.

In both Non-Direct Vent and Direct Vent applications, the vent termination is limited by local building codes. In the absence of local codes, refer to the current National Fuel Gas Code ANSI Z223-1/NFPA 54 in U.S.A., and current CSA-B149 Natural Gas and Propane Installation Codes in Canada for details. Position termination according to location given in FIGURE 33 or FIGURE 34. In addition, position termination so it is free from any obstructions and 12" above the average snow accumulation.

At vent termination, care must be taken to maintain protective coatings over building materials (prolonged exposure to exhaust condensate can destroy protective coatings). It is recommended that the exhaust outlet not be located within 6 feet (1.8m) of an outdoor AC unit because the condensate can damage the painted coating.

***NOTE -** See TABLE 19 for maximum allowed exhaust pipe length without insulation in unconditioned space during winter design temperatures below 32°F (0°C). If required exhaust pipe should be insulated with 1/2" (13mm) Armaflex or equivalent. In extreme cold climate areas, 3/4" (19mm) Armaflex or equivalent may be necessary. Insulation must be protected from deterioration. Armaflex with UV protection is permissable. Basements or other enclosed areas that are not exposed to the outdoor ambient temperature and are above 32 degrees F (0°C) are to be considered conditioned spaces.*

⚠ IMPORTANT

Do not use screens or perforated metal in exhaust terminations. Doing so will cause freeze-ups and may block the terminations.

⚠ IMPORTANT

For Canadian Installations Only: In accordance to CSA International B149 installation codes, the minimum allowed distance between the combustion air intake inlet and the exhaust outlet of other appliances shall not be less than 12 inches (305mm).

TABLE 19

Maximum Allowable Exhaust Vent Pipe Length (in ft.[3]) Without Insulation In Unconditioned Space For Winter Design Temperatures Two - Stage High Efficiency Furnace

[1] Winter Design Temperatures	Vent Pipe Diameter	Unit Input Size					
		070		090		110	
		[3]Maximum Uninsulated Exhaust Vent Length (ft.)					
		PVC	[2] PolyPro/ InnoFlue/ ECCO	PVC	[2] PolyPro/ InnoFlue/ ECCO	PVC	[2] PolyPro/ InnoFlue/ ECCO
32 to 21°F	1-1/2 in.	20	N/A	N/A	N/A	N/A	N/A
	2 in.	33	30	46	42	30	30
	2-1/2 in.	26	N/A	37	N/A	36	N/A
	3 in.	21	21	30	30	29	29
20 to 1°F	1-1/2 in.	20	N/A	N/A	N/A	N/A	N/A
	2 in.	19	17	28	25	27	24
	2-1/2 in.	14	N/A	21	N/A	20	N/A
	3 in.	9	9	16	16	14	14
0 to –20°F	1-1/2 in.	13	N/A	N/A	N/A	N/A	N/A
	2 in.	12	10	19	16	18	15
	2-1/2 in.	7	N/A	13	N/A	12	N/A
	3 in.	N/A	N/A	8	8	7	7

1Refer to 99% Minimum Design Temperature table provided in the current edition of the ASHRAE Fundamentals Handbook.

2 *PolyPro® poly-propylene vent pipe is a registered trademark of DuraVent®. Innoflue® is a registered trademark of Centrotherm Eco Systems.ECCO Polypropylene Vent™is a registered trademark of ECCO Manufacturing™*

3 Vent length in table is equivalent length. Consider each elbow as 5ft. of linear length.

NOTE - Concentric terminations are the equivalent of 5' and should be considered when measuring pipe length.

NOTE - Maximum uninsulated vent lengths listed may include the termination(vent pipe exterior to the structure) and cannot exceed 5 linear feet or the maximum allowable intake or exhaust vent length listed in TABLE 19 or TABLE 20 which ever is less.

NOTE - If insulation is required in an unconditioned space, it must be located on the pipe closest to the furnace. See FIGURE 32.

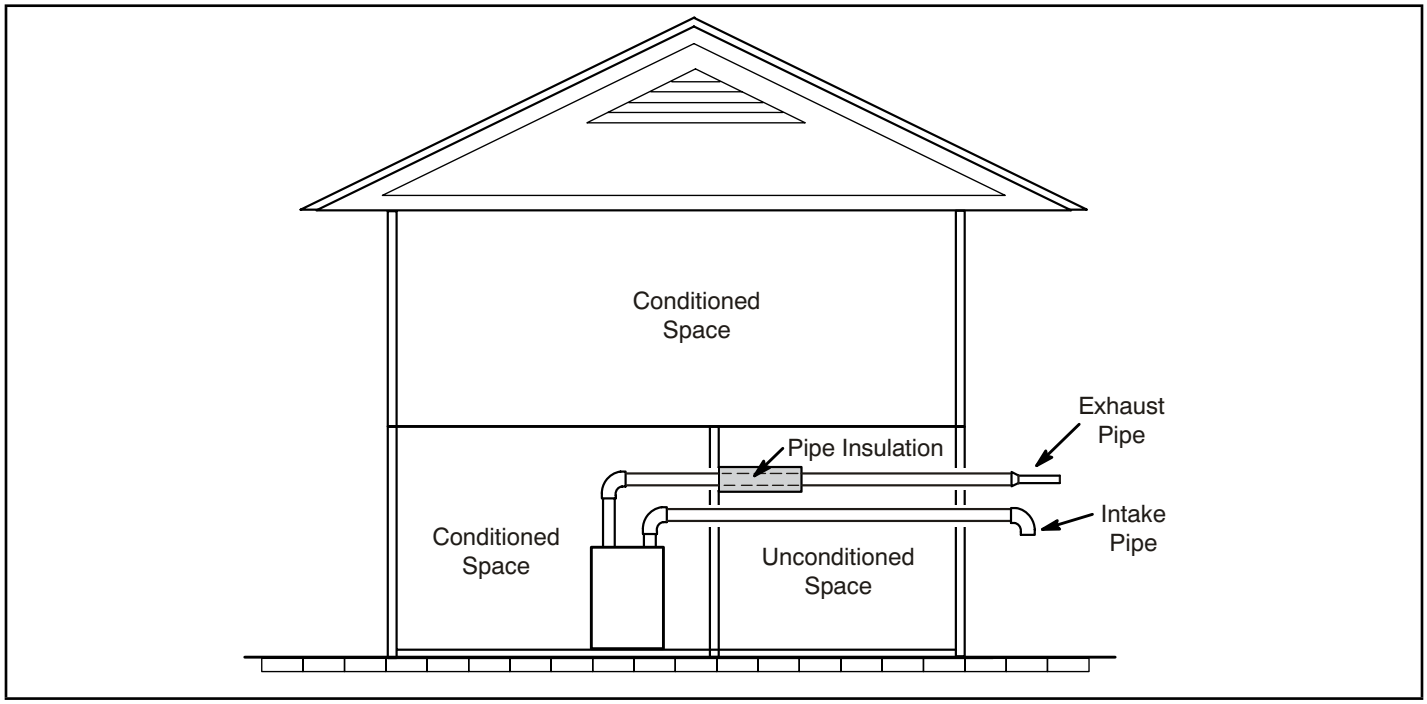

FIGURE 32

TABLE 20

Maximum Allowable Exhaust Vent Length Using Ventilated Attic or Crawl Space For Intake Air in Feet

NOTE - Additional vent pipe and elbows used to terminate the vent pipe outside the structure must be included in the total vent length calculation.

Standard Termination at Elevation 0 - 10,000 ft												
Number of 90° Elbows Used	1-1/2” Pipe			2” Pipe			2-1/2" Pipe			3" Pipe		
	Capacity			Capacity			Capacity			Capacity		
	070	090	110	070	090	110	070	090	110	070	090	110
1	n/a	n/a	n/a	41	24	n/a	85	63	28	102	83	83
2				36	19		80	58	23	97	78	78
3				31	14		75	53	18	92	73	73
4				26	9		70	48	13	87	68	68
5				21	4		65	43	8	82	63	63
6				16	n/a		60	38	3	77	58	58
7				11			55	33	n/a	72	53	53
8				6			50	28		67	48	48
9				1			45	23		62	43	43
10				n/a			40	18		57	38	38

VENT TERMINATION CLEARANCES
FOR NON-DIRECT VENT INSTALLATIONS IN THE USA AND CANADA

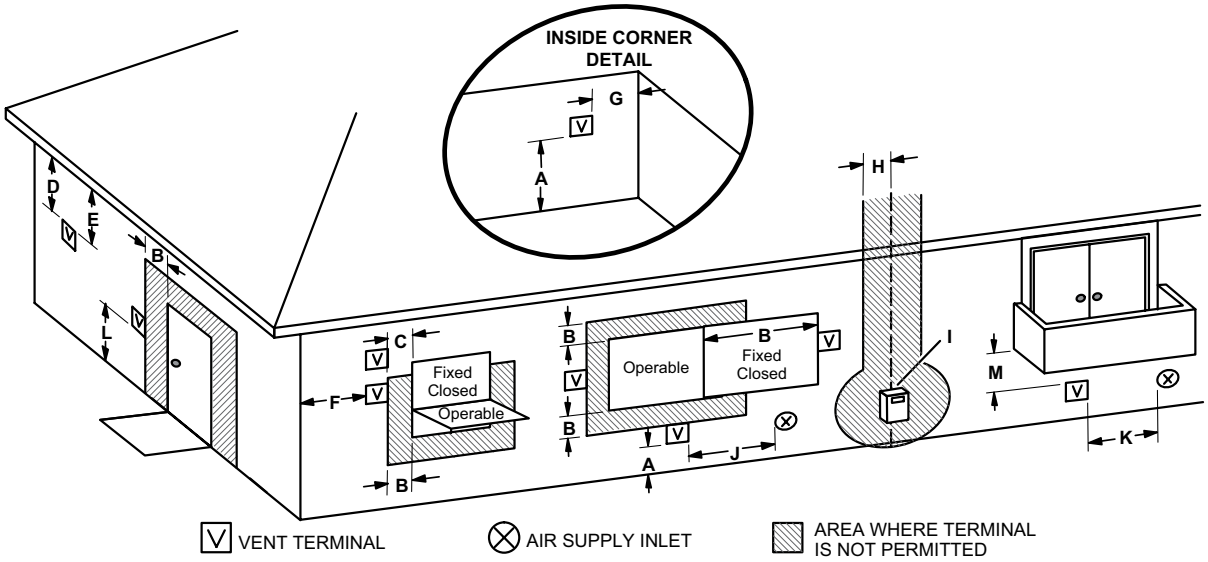

		US Installations[1]	Canadian Installations[2]
A =	Clearance above grade, veranda, porch, deck or balcony	12 inches (305mm) or 12 in. (305mm) above average snow accumulation.	12 inches (305mm) or 12 in. (305mm) above average snow accumulation.
B =	Clearance to window or door that may be opened	4 feet (1.2 m) below or to side of opening; 1 foot (30cm) above opening	6 inches (152mm) for appliances <10,000 Btuh (3kw), 12 inches (305mm) for appliances > 10,000 Btuh (3kw) and <100,000 Btuh (30kw), 36 inches (.9m) for appliances > 100,000 Btuh (30kw)
C =	Clearance to permanently closed window	* 12”	* 12”
D =	Vertical clearance to ventilated soffit located above the terminal within a horizontal distance of 2 feet (610 mm) from the center line of the terminal	* Equal to or greater than soffit depth.	* Equal to or greater than soffit depth.
E =	Clearance to unventilated soffit	* Equal to or greater than soffit depth.	* Equal to or greater than soffit depth.
F =	Clearance to outside corner	* No minimum to outside corner	* No minimum to outside corner
G =	Clearance to inside corner	*	*
H =	Clearance to each side of center line extended above meter / regulator assembly	* 3 feet (.9m) within a height 15 feet (4.5m) above the meter / regulator assembly	3 feet (.9m) within a height 15 feet (4.5m) above the meter / regulator assembly
I =	Clearance to service regulator vent outlet	* 3 feet (.9m)	3 feet (.9m)
J =	Clearance to non-mechanical air supply inlet to building or the combustion air inlet to any other appliance	4 feet (1.2 m) below or to side of opening; 1 foot (30 cm) above opening	6 inches (152mm) for appliances <10,000 Btuh (3kw), 12 inches (305mm) for appliances > 10,000 Btuh (3kw) and <100,000 Btuh (30kw), 36 inches (.9m) for appliances > 100,000 Btuh (30kw)
K =	Clearance to mechanical air supply inlet	3 feet (.9m) above if within 10 feet (3m) horizontally	6 feet (1.8m)
L =	Clearance above paved sidewalk or paved driveway located on public property	7 feet (2.1m)†	7 feet (2.1m)†
M =	Clearance under veranda, porch, deck or balcony	*12 inches (305mm)‡	12 inches (305mm)‡

[1] In accordance with the current ANSI Z223.1/NFPA 54 Natural Fuel Gas Code
[2] In accordance with the current CSA B149.1, Natural Gas and Propane Installation Code
† A vent shall not terminate directly above a sidewalk or paved driveway that is located between two single family dwellings and serves both dwellings.
‡ Permitted only if veranda, porch, deck or balcony is fully open on a minimum of two sides beneath the floor. Lennox recommends avoiding this location if possible.

*For clearances not specified in ANSI Z223.1/NFPA 54 or CSA B149.1, clearance will be in accordance with local installation codes and the requirements of the gas supplier and these installation instructions.”

NOTE - *This figure is intended to illustrate clearance requirement and does not serve as a substitute for locally adopted installation codes.*

FIGURE 33

VENT TERMINATION CLEARANCES FOR DIRECT VENT INSTALLATIONS IN THE US AND CANADA

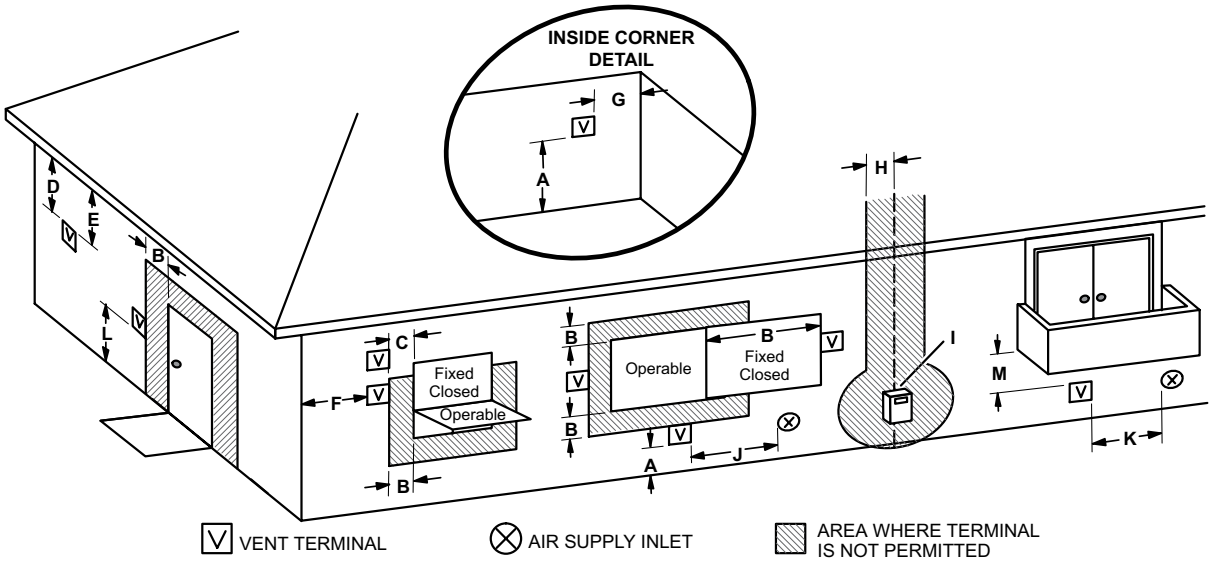

		US Installations[1]	Canadian Installations[2]
A =	Clearance above grade, veranda, porch, deck or balcony	12 inches (305mm) or 12 in. (305mm) above average snow accumulation.	12 inches (305mm) or 12 in. (305mm) above average snow accumulation.
B =	Clearance to window or door that may be opened	6 inches (152mm) for appliances <10,000 Btuh (3kw), 9 inches (228mm) for appliances > 10,000 Btuh (3kw) and <50,000 Btuh (15 kw), 12 inches (305mm) for appliances > 50,000 Btuh (15kw)	6 inches (152mm) for appliances <10,000 Btuh (3kw), 12 inches (305mm) for appliances > 10,000 Btuh (3kw) and <100,000 Btuh (30kw), 36 inches (.9m) for appliances > 100,000 Btuh (30kw)
C =	Clearance to permanently closed window	* 12”	* 12”
D =	Vertical clearance to ventilated soffit located above the terminal within a horizontal distance of 2 feet (610mm) from the center line of the terminal	* Equal to or greater than soffit depth	* Equal to or greater than soffit depth
E =	Clearance to unventilated soffit	* Equal to or greater than soffit depth	* Equal to or greater than soffit depth
F =	Clearance to outside corner	* No minimum to outside corner	* No minimum to outside corner
G =	Clearance to inside corner	*	*
H =	Clearance to each side of center line extended above meter / regulator assembly	3 feet (.9m) within a height 15 feet (4.5m) above the meter / regulator assembly	3 feet (.9m) within a height 15 feet (4.5m) above the meter / regulator assembly
I =	Clearance to service regulator vent outlet	* 3 feet (.9m)	3 feet (.9m)
J =	Clearance to non-mechanical air supply inlet to building or the combustion air inlet to any other appliance	6 inches (152mm) for appliances <10,000 Btuh (3kw), 9 inches (228mm) for appliances > 10,000 Btuh (3kw) and <50,000 Btuh (15 kw), 12 inches (305mm) for appliances > 50,000 Btuh (15kw)	6 inches (152mm) for appliances <10,000 Btuh (3kw), 12 inches (305mm) for appliances > 10,000 Btuh (3kw) and <100,000 Btuh (30kw), 36 inches (.9m) for appliances > 100,000 Btuh (30kw)
K =	Clearance to mechanical air supply inlet	3 feet (.9m) above if within 10 feet (3m) horizontally	6 feet (1.8m)
L =	Clearance above paved sidewalk or paved driveway located on public property	* 7 feet (2.1m)	7 feet (2.1m)†
M =	Clearance under veranda, porch, deck or balcony	*12 inches (305mm)‡	12 inches (305mm)‡

[1] In accordance with the current ANSI Z223.1/NFPA 54 Natural Fuel Gas Code

[2] In accordance with the current CSA B149.1, Natural Gas and Propane Installation Code

† A vent shall not terminate directly above a sidewalk or paved driveway that is located between two single family dwellings and serves both dwellings.

‡ Permitted only if veranda, porch, deck or balcony is fully open on a minimum of two sides beneath the floor. Lennox recommends avoiding this location if possible.

*For clearances not specified in ANSI Z223.1/NFPA 54 or CSA B149.1, clearance will be in accordance with local installation codes and the requirements of the gas supplier and these installation instructions.”

NOTE - *This figure is intended to illustrate clearance requirements and does not serve as a substitute for locally adopted installation codes.*

FIGURE 34

Details of Intake and Exhaust Piping Terminations for Direct Vent Installations

NOTE - In Direct Vent installations, combustion air is taken from outdoors and flue gases are discharged to outdoors.

NOTE - Flue gas may be slightly acidic and may adversely affect some building materials. If any vent termination is used and the flue gasses may impinge on the building material, a corrosion-resistant shield (minimum 24 inches square) should be used to protect the wall surface. If the optional tee is used, the protective shield is recommended. The shield should be constructed using wood, plastic, sheet metal or other suitable material. All seams, joints, cracks, etc. in the affected area should be sealed using an appropriate sealant. See FIGURE 38.

Intake and exhaust pipes may be routed either horizontally through an outside wall or vertically through the roof. In attic or closet installations, vertical termination through the roof is preferred. FIGURE 35 through FIGURE 43 show typical terminations.

1 - Vent terminations are not required to be in the same pressure zone. You may exit the intake on one side of the structure and the exhaust on another side (figure 32). You may exit the exhaust out the roof and the intake out the side of the structure (FIGURE 37).

2 - Intake and exhaust pipes should be placed as close together as possible at termination end (refer to illustrations). Maximum separation is 3" (76mm) on roof terminations and 6" (152mm) on side wall terminations.

NOTE - *When venting in different pressure zones, the maximum separation requirement of intake and exhaust pipe DOES NOT apply.*

3 - On roof terminations, the intake piping should terminate straight down using two 90° elbows (FIGURE 35).

4 - Exhaust piping must terminate straight out or up as shown. A reducer may be required on the exhaust piping at the point where it exits the structure to improve the velocity of exhaust away from the intake piping. See TABLE 21.

TABLE 21

EXHAUST PIPE TERMINATION SIZE REDUCTION

MODEL	Termination Pipe Size
*070	1-1/2" (38MM)
*090 and 110	2" (51MM)

* -070 and -090 units with the flush mount termination must use the 1-1/2"accelerator supplied with the kit.

5 - On field-supplied terminations for side wall exit, exhaus piping may extend a maximum of 12 inches (305mm) for 2" PVC and 20 inches (508mm) for 3" (76mm) PVC beyond the outside wall. Intake piping should be as short as possible. See FIGURE 38.

NOTE - *Care must be taken to avoid recirculation of exhaust back into intake pipe.*

6 - On field supplied terminations, a minimum distance between the end of the exhaust pipe and the end of the intake pipe without a termination elbow is 8" and a minimum distance of 6" with a termination elbow. See FIGURE 38.

7 - If intake and exhaust piping must be run up a side wall to position above snow accumulation or other obstructions, piping must be supported. At least one bracket must be used within 6" from the top of the elbow and then every 24" (610mm) as shown in FIGURE 38, to prevent any movement in any direction. When exhaust and intake piping must be run up an outside wall, the exhaust piping must be terminated with pipe sized per TABLE 21.The intake piping may be equipped with a 90° elbow turndown. Using turndown will add 5 feet (1.5m) to the equivalent length of the pipe.

8 - A multiple furnace installation may use a group of up to four terminations assembled together horizontally, as shown in FIGURE 41.

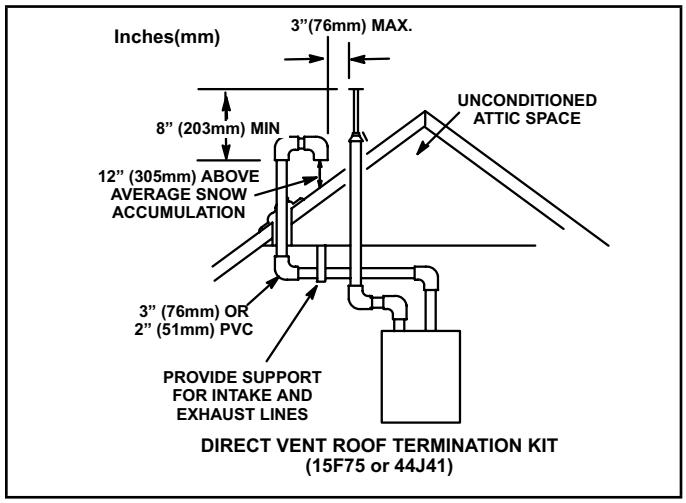

FIGURE 35

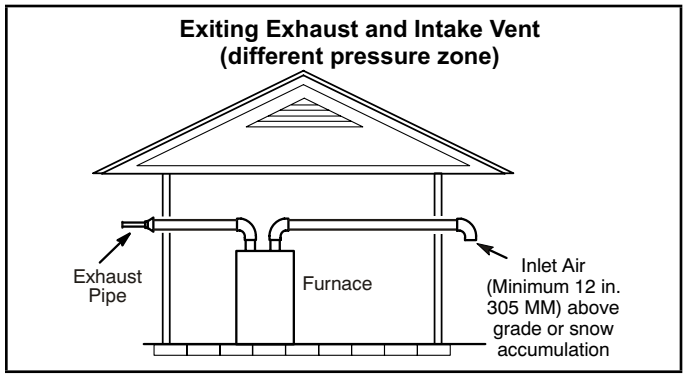

FIGURE 36

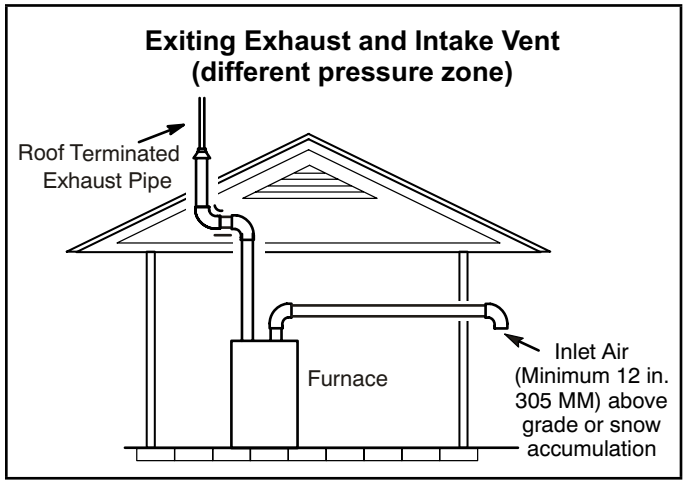

FIGURE 37

FIELD FABRICATED WALL TERMINATION

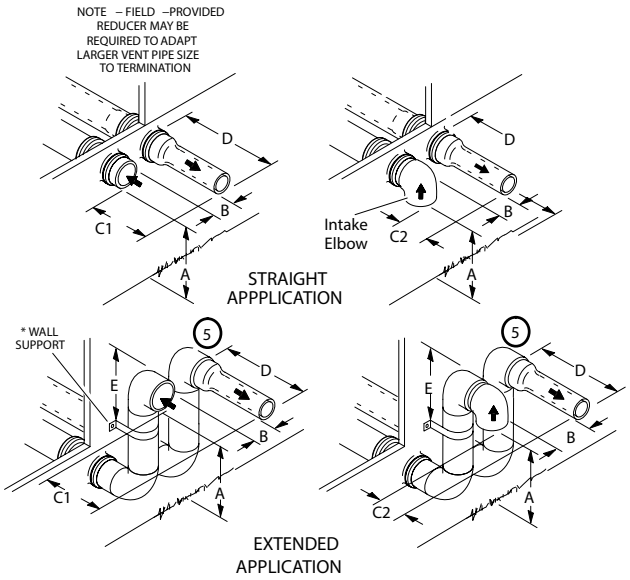

	2" (51mm) Vent Pipe	3" (76mm) Vent Pipe
A– Minimum clearance above grade or average snow accumulation	12" (305 mm)	12" (305 mm)
B– Maximum horizontal separation between intake and exhaust	6" (152 mm)	6" (152 mm)
C1 -Minimum from end of exhaust to inlet of intake	8" (203 mm)	8" (203 mm)
C2 -Minimum from end of exhaust to inlet of intake	6" (152 mm)	6" (152 mm)
D– Maximum exhaust pipe length	12" (305 mm)	20" (508 mm)
E– Maximum wall support distance from top of each pipe (intake/exhaust)	6" (152 mm)	6" (152 mm)

See maximum allowable venting tables for venting lengths with this arrangement.

* Use wall support every 24" (610 mm). Use two wall supports if extension is greater than 24" (610 mm) but less than 48" (1219 mm).

NOTE – One wall support must be within 6" (152 mm) from top of each pipe (intake and exhaust) to prevent movement in any direction.

ALTERNATE TERMINATIONS (TEE & FORTYFIVE DEGREE ELBOWS ONLY)

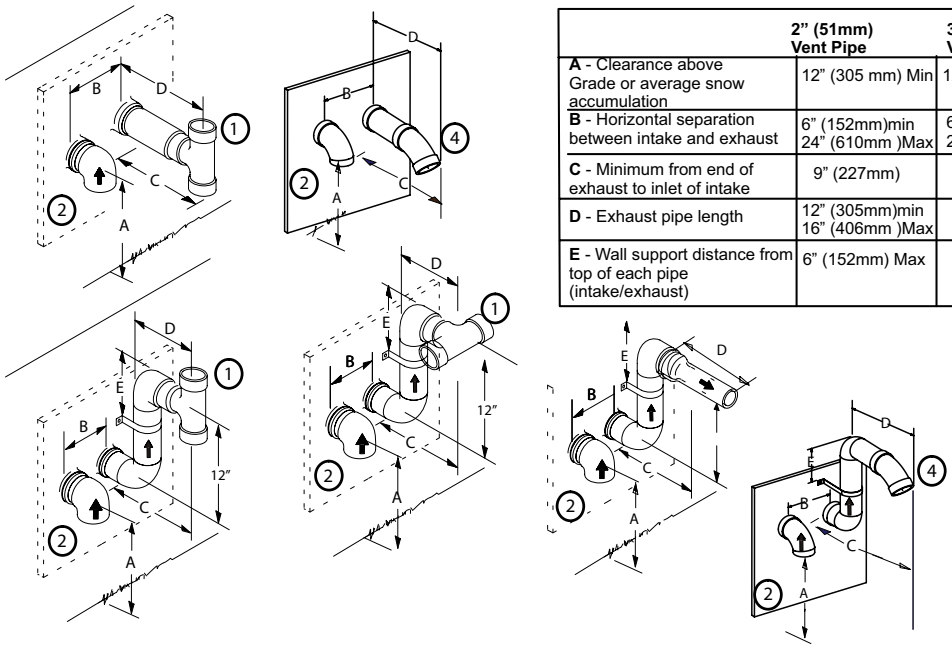

	2" (51mm) Vent Pipe	3" (76mm) Vent Pipe
A - Clearance above Grade or average snow accumulation	12" (305 mm) Min	12" (305 mm) Min
B - Horizontal separation between intake and exhaust	6" (152mm)min 24" (610mm)Max	6" (152mm)min 24" (610mm)Max
C - Minimum from end of exhaust to inlet of intake	9" (227mm)	9" (227mm)
D - Exhaust pipe length	12" (305mm)min 16" (406mm)Max	12" (305mm)min 16" (406mm)Max
E - Wall support distance from top of each pipe (intake/exhaust)	6" (152mm) Max	6" (152mm) Max

[1] The exhaust termination tee should be connected to the 2" or 3" PVC flue pipe as shown in the illustration. In horizontal tee applications there must be be a minimum of 3 ft away from covered patios or any living ares and cannot be within 3 ft of a window. Do not use an accelerator in applications that include an exhaust termination tee. The accelerator is not required.

[2] As required. Flue gas may be acidic and may adversely affect some building materials. If a side wall vent termination is used and flue gases will impinge on the building materials, a corrosion –resistant shield (24 inches square) should be used to protect the wall surface. If optional tee is used, the protective shield is recommended. The shield should be constructed using wood, sheet metal or other suitable material. All seams, joints, cracks, etc. in affected area, should be sealed using an appropriate sealant.

[3] Exhaust pipe 45 ° elbow can be rotated to the side away from the combustion air inlet to direct exhaust away from adjacent property. The exhaust must never be directed toward the combustion air inlet.

[4] Exhaust pipe can be rotated from the 12 o'clock position down to the 4 o' clock position

[5] Exhaust pipe in double snorkel applications can use a 45 as an option to the accelerator tip.

FIGURE 38

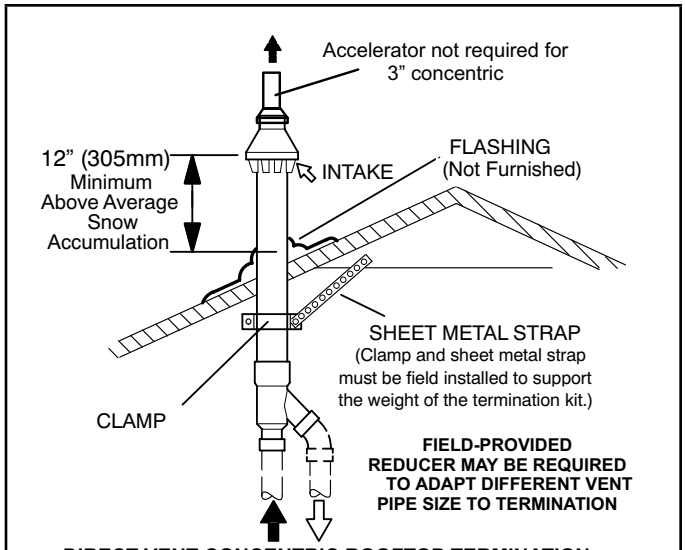

DIRECT VENT CONCENTRIC ROOFTOP TERMINATION
71M80, 69M29 or 60L46 (US)
44W92 or 44W93 (Canada)

FIGURE 39

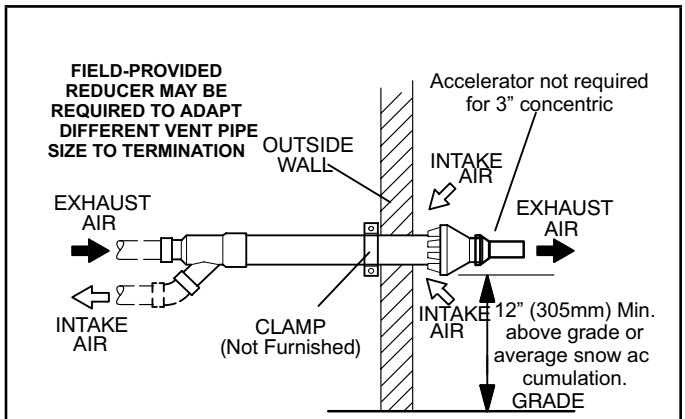

DIRECT VENT CONCENTRIC WALL TERMINATION
71M80, 69M29 or 60L46 (US)
44W92 or 44W93 (Canada)

FIGURE 40

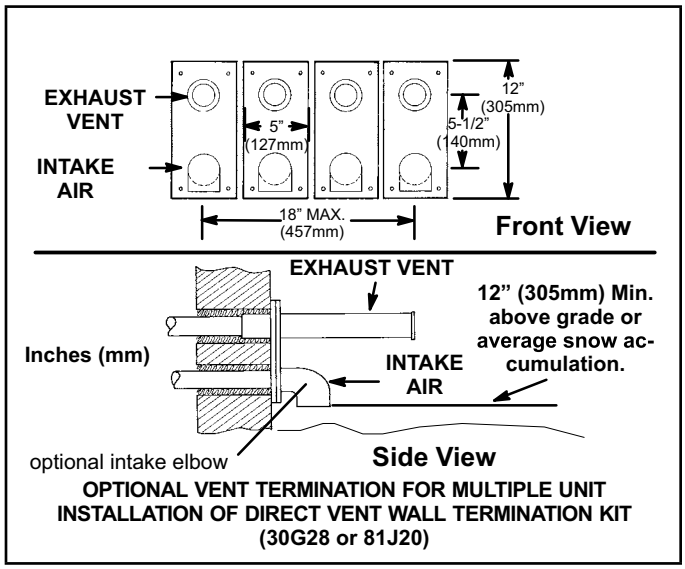

OPTIONAL VENT TERMINATION FOR MULTIPLE UNIT INSTALLATION OF DIRECT VENT WALL TERMINATION KIT (30G28 or 81J20)

FIGURE 41

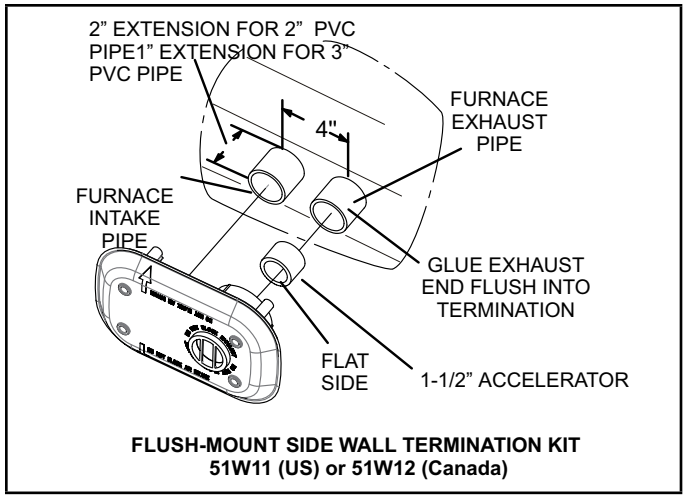

FLUSH-MOUNT SIDE WALL TERMINATION KIT
51W11 (US) or 51W12 (Canada)

FIGURE 42

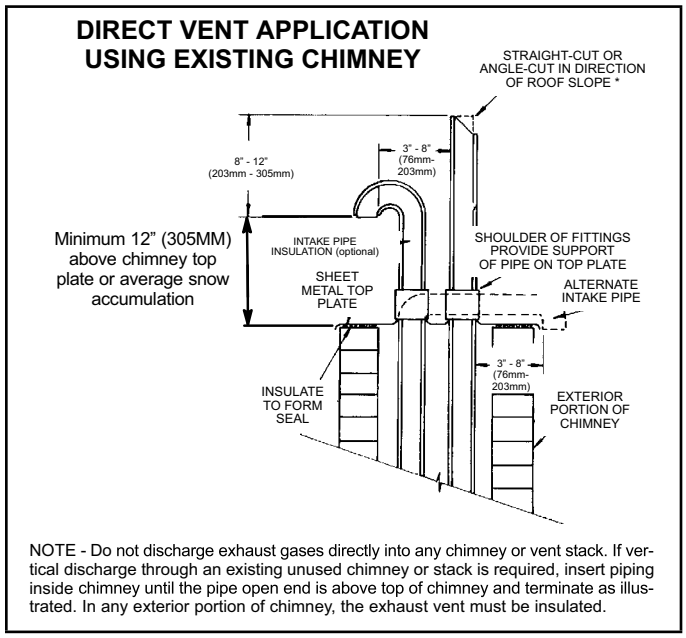

NOTE - Do not discharge exhaust gases directly into any chimney or vent stack. If vertical discharge through an existing unused chimney or stack is required, insert piping inside chimney until the pipe open end is above top of chimney and terminate as illustrated. In any exterior portion of chimney, the exhaust vent must be insulated.

FIGURE 43

Details of Exhaust Piping Terminations for Non-Direct Vent Applications

Exhaust pipes may be routed either horizontally through an outside wall or vertically through the roof. In attic or closet installations, vertical termination through the roof is preferred. FIGURE 44 and FIGURE 45 show typical terminations.

1 - Exhaust piping must terminate straight out or up as shown. The termination pipe must be sized as listed in table 15.The specified pipe size ensures proper velocity required to move the exhaust gases away from the building.

2 - On field supplied terminations for side wall exit, exhaust piping may extend a maximum of 12 inches (305mm) for 2” PVC and 20 inches (508mm) for 3” (76mm) PVC beyond the outside wall.

3 - If exhaust piping must be run up a side wall to position above snow accumulation or other obstructions, piping must be supported every 24 inches (610mm). When exhaust piping must be run up an outside wall, any reduction in exhaust pipe size must be done after the final elbow.

4 - Distance between exhaust pipe terminations on multiple furnaces must meet local codes.

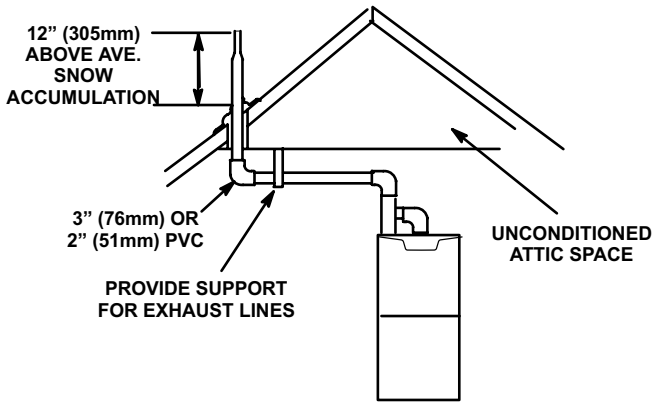

NON-DIRECT VENT ROOF TERMINATION KIT (15F75 or 44J41)

FIGURE 44

NON-DIRECT VENT APPLICATION USING EXISTING CHIMNEY

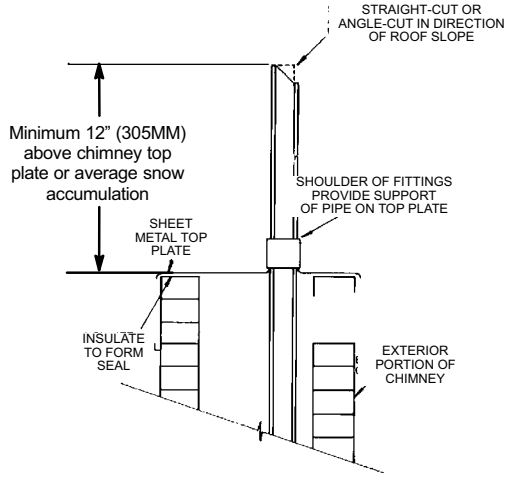

NOTE - Do not discharge exhaust gases directly into any chimney or vent stack. If vertical discharge through an existing unused chimney or stack is required, insert piping inside chimney until the pipe open end is above top of chimney and terminate as illustrated. In any exterior portion of chimney, the exhaust vent must be insulated.

FIGURE 45

Condensate Piping

This unit is designed for either right- or left-side exit of condensate piping. Refer to FIGURE 46 and FIGURE 48 for condensate trap locations.

CONDENSATE TRAP AND PLUG LOCATIONS

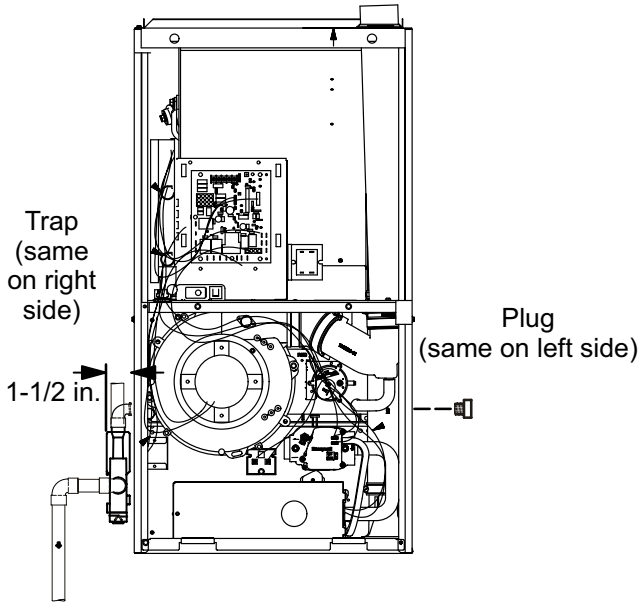

FIGURE 46

1 - Determine which side condensate piping will exit the unit, location of trap, field-provided fittings and length of PVC pipe required to reach available drain.

2 - For furnaces with a 1/2" drain connection use a 3/8 allen wrench and remove plug (FIGURE 46) from the cold end header box at the appropriate location on the side of the unit. Install field-provided 1/2 NPT male fitting into cold end header box. For furnaces with a 3/4" drain connection use a large flat head screw driver or a 1/2" drive socket extension and remove plug. Install provided 3/4 NPT street elbow fitting into cold end header box. Use Teflon tape or appropriate pipe dope.

3 - Install the cap over the clean out opening at the base of the trap. Secure with clamp. See FIGURE 51.

4 - Install drain trap using appropriate PVC fittings, glue all joints. Glue the provided drain trap as shown in FIGURE 51. Route the condensate line to an open drain.

5 - FIGURE 49 shows the furnace and evaporator coil using a separate drain. If necessary, the condensate line from the furnace and evaporator coil can drain together. See FIGURE 50. The field provided vent must be a minimum 1" to a maximum 2" length above the condensate drain outlet connection.

NOTE - *If necessary the condensate trap may be installed up to 5 feet away from the furnace. Piping from furnace must slope down a minimum of 1/4" per ft. toward trap.*

NOTE - *Appropriately sized tubing and barbed fitting may be used for condensate drain. Attach to the drain on the trap using a hose clamp. See FIGURE 47.*

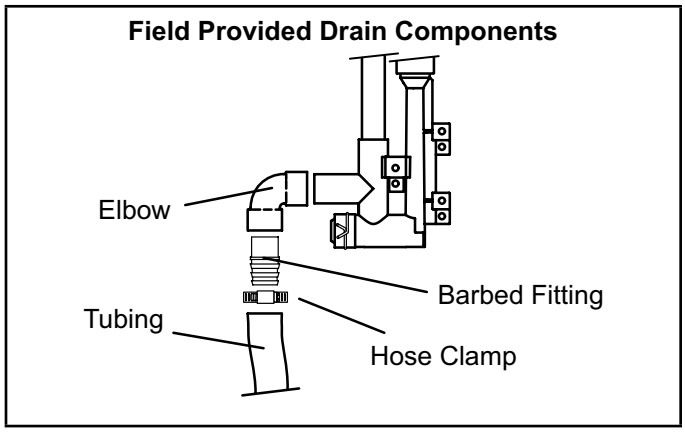

FIGURE 47

6 - If unit will be started immediately upon completion of installation, prime trap per procedure outlined in Unit

7 - Start-Up section.

Condensate line must slope downward away from the trap to drain. If drain level is above condensate trap, condensate pump must be used. Condensate drain line should be routed within the conditioned space to avoid freezing of condensate and blockage of drain line. If this is not possible, a heat cable kit may be used on the condensate trap and line. Heat cable kit is available from Lennox in various lengths; 6 ft. (1.8m) - kit no. 26K68; 24 ft. (7.3m) - kit no. 26K69; and 50 ft. (15.2m) - kit no. 26K70.

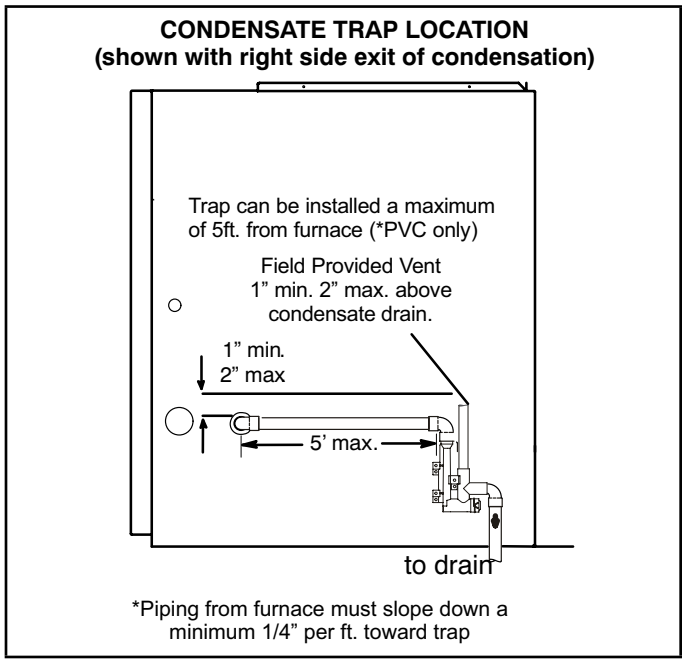

FIGURE 48

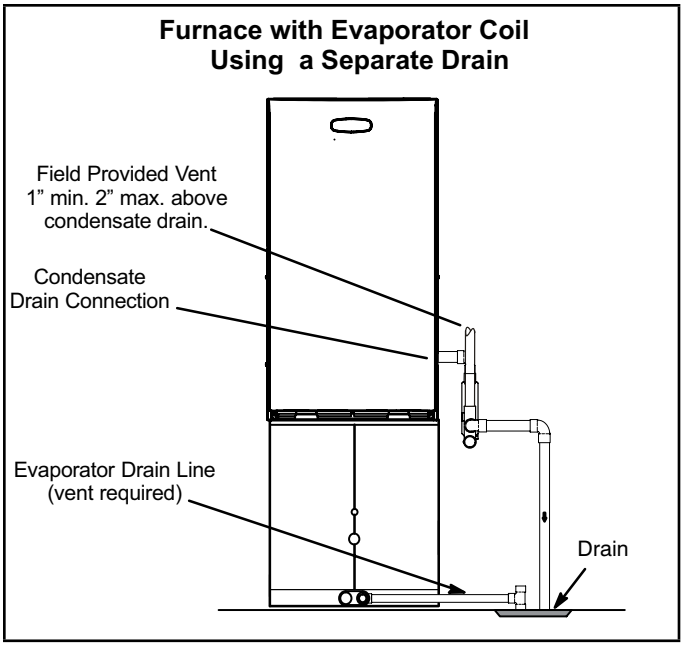

FIGURE 49

⚠ IMPORTANT

When combining the furnace and evaporator coil drains together, the A/C condensate drain outlet must be vented to relieve pressure in order for the furnace pressure switch to operate properly.

⚠ CAUTION

Do not use copper tubing or existing copper condensate lines for drain line.

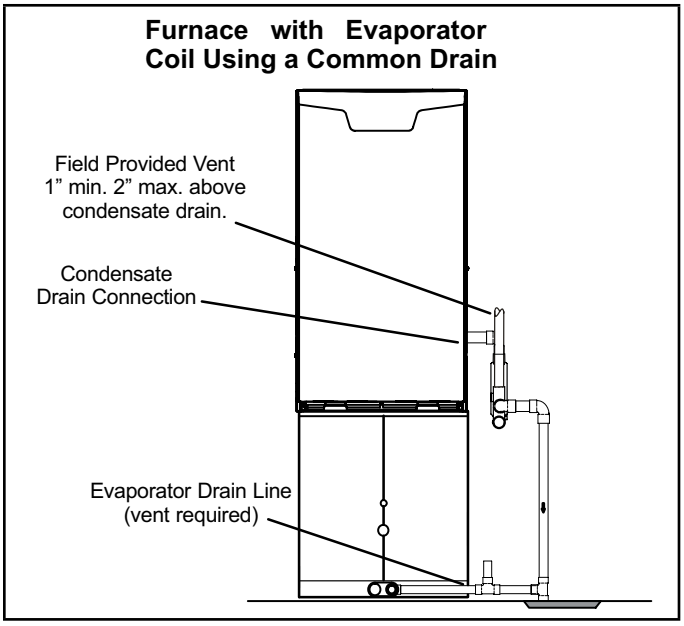

FIGURE 50

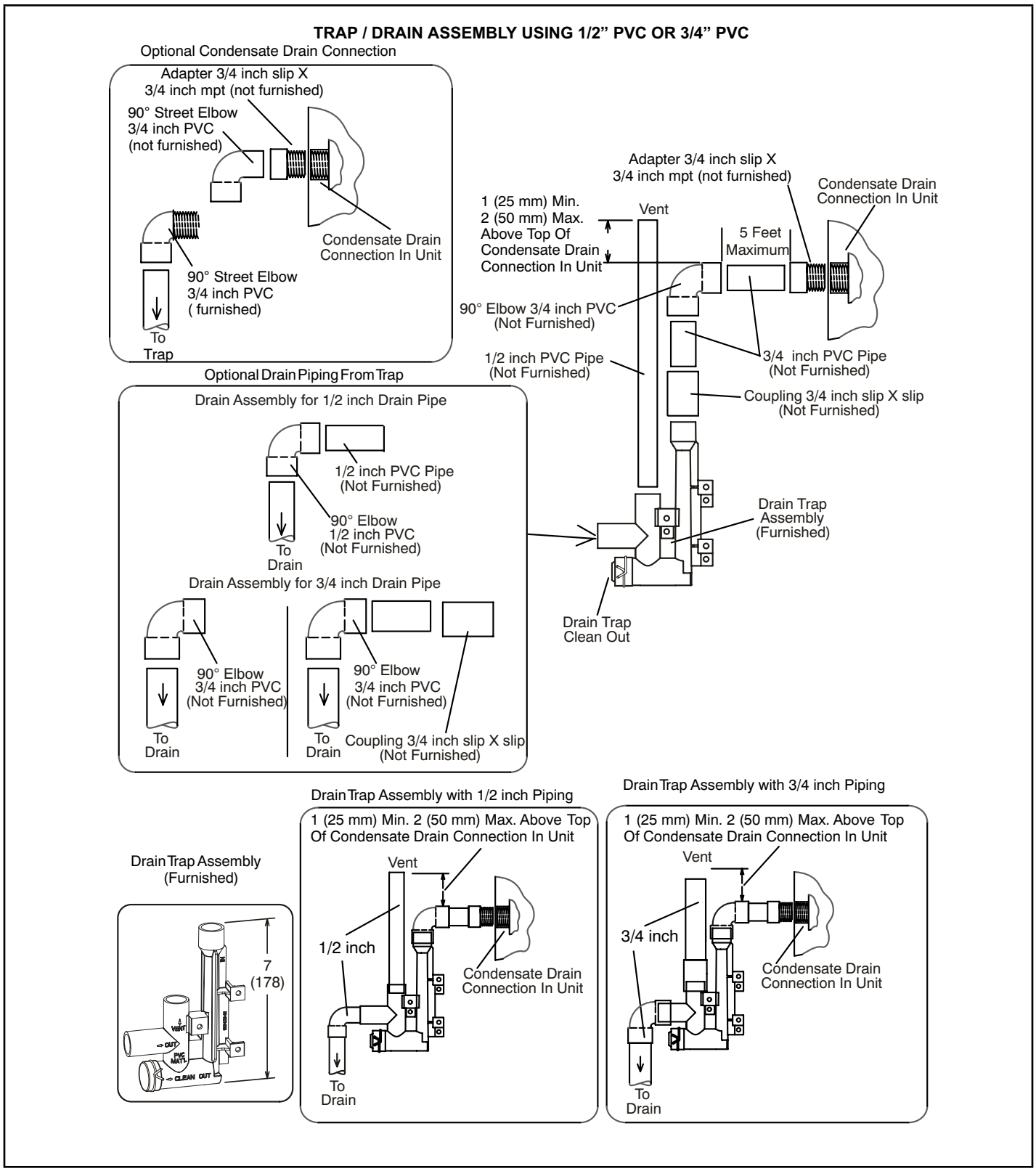
TRAP / DRAIN ASSEMBLY USING 1/2" PVC OR 3/4" PVC
Optional Condensate Drain Connection
Adapter 3/4 inch slip X
3/4 inch mpt (not furnished)
90° Street Elbow
3/4 inch PVC
(not furnished)
Condensate Drain
Connection In Unit
90° Street Elbow
3/4 inch PVC
(furnished)
To
Trap
Adapter 3/4 inch slip X
3/4 inch mpt (not furnished)
Condensate Drain
Connection In Unit
1 (25 mm) Min.
2 (50 mm) Max.
Above Top Of
Condensate Drain
Connection In Unit
Vent
5 Feet
Maximum
90° Elbow 3/4 inch PVC
(Not Furnished)
1/2 inch PVC Pipe
(Not Furnished)
3/4 inch PVC Pipe
(Not Furnished)
Coupling 3/4 inch slip X slip
(Not Furnished)
Optional Drain Piping From Trap
Drain Assembly for 1/2 inch Drain Pipe
1/2 inch PVC Pipe
(Not Furnished)
90° Elbow
1/2 inch PVC
(Not Furnished)
To
Drain
Drain Trap
Assembly
(Furnished)
Drain Assembly for 3/4 inch Drain Pipe
90° Elbow
3/4 inch PVC
(Not Furnished)
To
Drain
90° Elbow
3/4 inch PVC
(Not Furnished)
To
Drain
Coupling 3/4 inch slip X slip
(Not Furnished)
Drain Trap
Clean Out
Drain Trap Assembly
(Furnished)
7
(178)
Drain Trap Assembly with 1/2 inch Piping
1 (25 mm) Min. 2 (50 mm) Max. Above Top
Of Condensate Drain Connection In Unit
Vent
1/2 inch
Condensate Drain
Connection In Unit
To
Drain
Drain Trap Assembly with 3/4 inch Piping
1 (25 mm) Min. 2 (50 mm) Max. Above Top
Of Condensate Drain Connection In Unit
Vent
3/4 inch
Condensate Drain
Connection In Unit
To
Drain

FIGURE 51

III-START-UP

A-Preliminary and Seasonal Checks

1 - Inspect electrical wiring, both field and factory installed for loose connections. Tighten as required.

2 - Check voltage at disconnect switch. Voltage must be within range listed on the nameplate. If not, consult the power company and have voltage condition corrected before starting unit.

3 - Inspect condition of condensate traps and drain assembly. Disassemble and clean seasonally.

B-Heating Start-Up

BEFORE LIGHTING the unit, smell all around the furnace area for gas. Be sure to smell next to the floor because some gas is heavier than air and will settle on the floor.

The gas valve on the ML297DFVK(X) is equipped with a gas control switch. Use only your hand to move the switch. Never use tools. If the the switch will not move by hand, replace the valve. Do not try to repair it. Force or attempted repair may result in a fire or explosion.

Placing the furnace into operation:

ML297DFVK(X) units are equipped with a SureLight® ignition system. Do not attempt to manually light burners on this furnace. Each time the thermostat calls for heat, the burners will automatically light The ignitor does not get hot when there is no call for heat on units with SureLight ignition system.

Priming Condensate Trap

The condensate trap should be primed with water prior to start-up to ensure proper condensate drainage. Either pour 10 fl. oz. (300 ml) of water into the trap, or follow these steps to prime the trap:

1 - Follow the lighting instructions to place the unit into operation.

2 - Set the thermostat to initiate a heating demand.

3 - Allow the burners to fire for approximately 3 minutes.

4 - Adjust the thermostat to deactivate the heating demand.

5 - Wait for the combustion air inducer to stop. Set the thermostat to initiate a heating demand and again allow the burners to fire for approximately 3 minutes.

6 - Adjust the thermostat to deactivate the heating demand and again wait for the combustion air inducer to stop. At this point, the trap should be primed with sufficient water to ensure proper condensate drain operation.

⚠ WARNING

If you do not follow these instructions exactly, a fire or explosion may result causing property damage, personal injury or death.

Gas Valve Operation (FIGURE 52)

1 - **STOP!** Read the safety information at the beginning of this section.

2 - Set the thermostat to the lowest setting.

3 - Turn off all electrical power to the unit.

4 - This furnace is equipped with an ignition device which automatically lights the burners. Do not try to light the burners by hand.

5 - Remove the upper access panel.

6 - Move gas valve switch to **OFF.** See FIGURE 52.

7 - Wait five minutes to clear out any gas. If you then smell gas, **STOP!** Immediately call your gas supplier from a neighbor's phone. Follow the gas supplier's instructions. If you do not smell gas go to next step.

8 - Move gas valve switch to **ON.** See FIGURE 52.

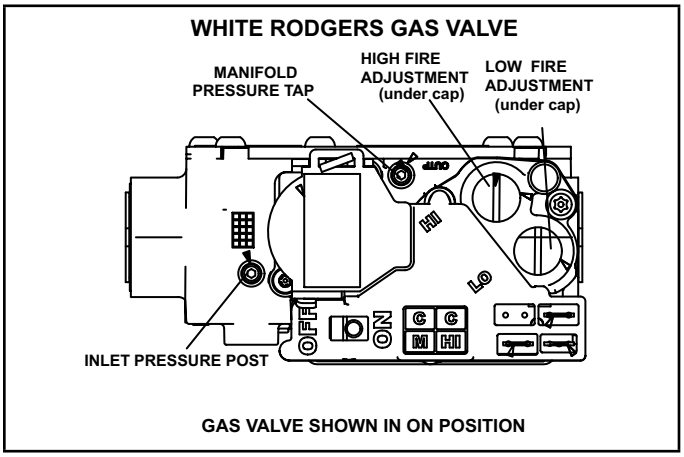

FIGURE 52

9 - Replace the upper access panel.

10 - Turn on all electrical power to to the unit.

11 - Set the thermostat to desired setting.

NOTE - *When unit is initially started, steps 1 through 11 may need to be repeated to purge air from gas line.*

12 - If the appliance will not operate, follow the instructions "Turning Off Gas to Unit" and call your service technician or gas supplier.

Turning Off Gas to Unit

1 - Set the thermostat to the lowest setting.

2 - Turn off all electrical power to the unit if service is to be performed.

3 - Remove the upper access panel.

4 - Move gas valve switch to OFF.

5 - Replace the upper access panel.

Failure To Operate

If the unit fails to operate, check the following:

1 - Is the thermostat calling for heat?

2 - Are access panels securely in place?

3 - Is the main disconnect switch closed?

4 - Is there a blown fuse or tripped breaker?

5 - Is the filter dirty or plugged? Dirty or plugged filters will cause the limit control to shut the unit off.

6 - Is gas turned on at the meter?

7 - Is the manual main shut-off valve open?

8 - Is the internal manual shut-off valve open?

9 - Is the unit ignition system in lockout? If the unit locks out again, inspect the unit for blockages.

IV-HEATING SYSTEM SERVICE CHECKS

A-CSA Certification

All units are CSA design certified without modifications. Refer to the ML297DFVK(X) Installation Instruction.

B-Gas Piping

⚠ CAUTION

If a flexible gas connector is required or allowed by the authority that has jurisdiction, black iron pipe shall be installed at the gas valve and extend outside the furnace cabinet. The flexible connector can then be added between the black iron pipe and the gas supply line.

⚠ WARNING

Do not over torque (800 in-lbs) or under torque (350 in-lbs) when attaching the gas piping to the gas valve.

Gas supply piping should not allow more than 0.5”W.C. drop in pressure between gas meter and unit. Supply gas pipe must not be smaller than unit gas connection.

Compounds used on gas piping threaded joints should be resistant to action of liquefied petroleum gases.

C-Testing Gas Piping

⚠ IMPORTANT

In case emergency shutdown is required, turn off the main shut-off valve and disconnect the main power to unit. These controls should be properly labeled by the installer.

When pressure testing gas lines, the gas valve must be disconnected and isolated. Gas valves can be damaged if subjected to more than 0.5 psig (14” W.C.). See FIGURE 53. If the pressure is greater than 0.5psig (14”W.C.), use the manual shut-off valve before pressure testing to isolate furnace from gas supply.

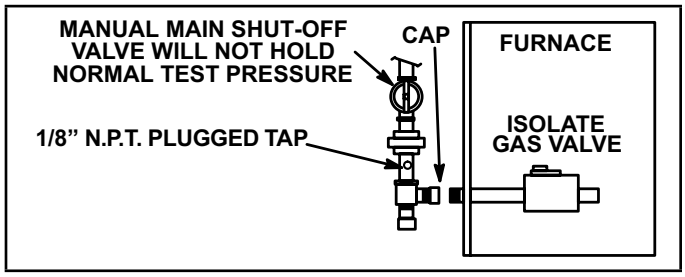

FIGURE 53

When checking piping connections for gas leaks, use preferred means. Kitchen detergents can cause harmful corrosion on various metals used in gas piping. Use of a specialty Gas Leak Detector is strongly recommended. It is available through Lennox under part number 31B2001. See Corp. 8411-L10, for further details.

Do not use matches, candles, flame or any other source of ignition to check for gas leaks.

D-Testing Gas Supply Pressure

An inlet pressure post located on the gas valve provides access to the supply pressure. See FIGURE 52. Back out the 3/32 hex screw one turn, connect a piece of 5/16 tubing and connect to a manometer to measure supply pressure. See TABLE 25 for supply line pressure.

E-Check Manifold Pressure

NOTE - *Pressure test adapter kit (10L34) is available from Lennox to facilitate manifold pressure measurement.*

A manifold pressure post located on the gas valve provides access to the manifold pressure. See FIGURE 52. Back out the 3/32 hex screw one turn, connect a piece of 5/16 tubing and connect to a manometer to measure manifold pressure. To correctly measure manifold pressure, the differential pressure between the positive gas manifold and the negative burner box must be considered.

⚠ IMPORTANT

For safety, connect a shut-off valve between the manometer and the gas tap to permit shut off of gas pressure to the manometer.

1 - Connect the test gauge positive side “+“ to manifold pressure tap on gas valve as noted above.
2 - Tee into the gas valve regulator vent hose and connect to test gauge negative “-”.
3 - Ignite unit on low fire and let run for 5 minutes to allow for steady state conditions.
4 - After allowing unit to stabilize for 5 minutes, record low fire manifold pressure and compare to value given in TABLE 25. If necessary, make adjustment. FIGURE 52 shows location of low fire adjustment screw.
5 - Repeat on high fire and compare to value given in TABLE 25. If necessary, make adjustment. FIGURE 52 shows location of high fire adjustment screw.
6 - Shut unit off and remove manometer as soon as an accurate reading has been obtained.
7 - Start unit and perform leak check. Seal leaks if found.

The gas valve is factory set and should not require adjustment. All gas valves are factory regulated.

F- Proper Gas Flow (Approximate)

Furnace should operate at least 5 minutes before checking gas flow. Determine time in seconds for two revolutions of gas through the meter. (Two revolutions assures a more accurate time.) **Divide by two** and compare to time in TABLE 22. If manifold pressure matches TABLE 25 and rate is incorrect, check gas orifices for proper size and restriction.

NOTE- *To obtain accurate reading, shut off all other gas appliances connected to meter.*

TABLE 22

GAS METER CLOCKING CHART				
ML297 Unit	Seconds for One Revolution			
	Natural		LP	
	1 cu ft Dial	2 cu ft Dial	1 cu ft Dial	2 cu ft Dial
-070	55	110	136	272
-090	41	82	102	204
-110	33	66	82	164
Natural-1000 btu/cu ft LP-2500 btu/cu ft				

⚠ IMPORTANT

For safety, shut unit off and remove manometer as soon as an accurate reading has been obtained. Take care to replace pressure tap plug.

G- Proper Combustion

Furnace should operate minimum 15 minutes with correct manifold pressure and gas flow rate before checking combustion. See sections E- and F-. Take combustion sample beyond the flue outlet. TABLE 23 shows acceptable combustions. **The maximum carbon monoxide reading should not exceed 100 ppm.**

TABLE 23

ML297 Model	CO_2% For Nat		CO_2% For L.P	
	Low Fire	High Fire	Low Fire	High Fire
070	5.5 - 6.5	7.3 - 8.3	6.5 - 7.5	8.6 - 9.6
090	5.9 - 6.9	7.8 - 8.8	6.9 - 7.9	9.1 - 10.1
110	6.3-7.3	8.2-9.2	7.3-8.3	9.5 -10.5

H- High Altitude

The manifold pressure, gas orifice and pressure switch may require adjustment or replacement to ensure proper operation at higher altitudes. See TABLE 24 for gas conversion and pressure switch kits. See TABLE 25 for manifold pressures.

TABLE 24

Conversion Kit and Pressure Switch Requirements at Varying Altitudes

Unit	Natural to LP/Propane	High Altitude Natural Burner Orifice Kit	High Altitude LP/ Propane Burner Orifice Kit	High Altitude Pressure Switch	
	0 - 7500 ft	7501 - 10,000 ft	7501 - 10,000 ft	4501 - 7500 ft	7501 - 10,000 ft
070	*11K51	73W37	*11K46	32C78	14A54
090				14A54	32C81
110				32C87	32C76

*** Conversion requires installation of a gas valve manifold spring which is provided with the gas conversion kit. Pressure switch is factory set. No adjustment necessary. All models use the factory-installed pressure switch from 0-4500 feet (0-1370 m).**

TABLE 25

Manifold and Supply Line Pressure 0-10,000ft.

Unit	Gas	Manifold Pressure in. wg.										Supply Line Pressure in. w.g 0 - 10,000 ft.	
		0 - 4500 ft		4501 - 5500 ft.		5501 - 6500 ft		6501 - 7500 ft		7501 - 10,000 ft			
		Low Fire	High Fire	Low Fire	High Fire	Low Fire	High Fire	Low Fire	High Fire	Low Fire	High Fire	Min	Max
All Sizes	Natural	1.7	3.5	1.6	3.3	1.5	3.2	1.5	3.1	1.7	3.5	4.5	13.0
	LP/ Propane	4.9	10.0	4.6	9.4	4.4	9.1	4.3	8.9	4.9	10.0	11.0	13.0

NOTE - A natural to L.P. propane gas changeover kit is necessary to convert this unit. Refer to the changeover kit installation instruction for the conversion procedure.

I- Proper Ground and Voltage

A poorly grounded furnace can contribute to premature ignitor failure. Use the following procedure to check for ground and voltage to the integrated control.

1 - Measure the AC voltage between Line Neutral (spade terminals) and “C” terminal (low voltage terminal block) on the integrated control. See FIGURE 54. A wide variation in the voltage between Line Neutral and “C” as a function of load indicates a poor or partial ground. Compare the readings to the table below. If the readings exceed the maximum shown in TABLE 26, make repairs before operating the furnace.

2 - In addition, measure the AC voltage from Line Hot to Line Neutral (spade terminals) on the integrated control. See FIGURE 54. This voltage should be in the range of 97 to 132 Vac.

TABLE 26

Furnace Status	Measurement VAC	
	Expected	Maximum
Power On Furnace Idle	0.3	2
CAI / Ignitor Energized	0.75	5
Indoor Blower Energized	Less than 2	10

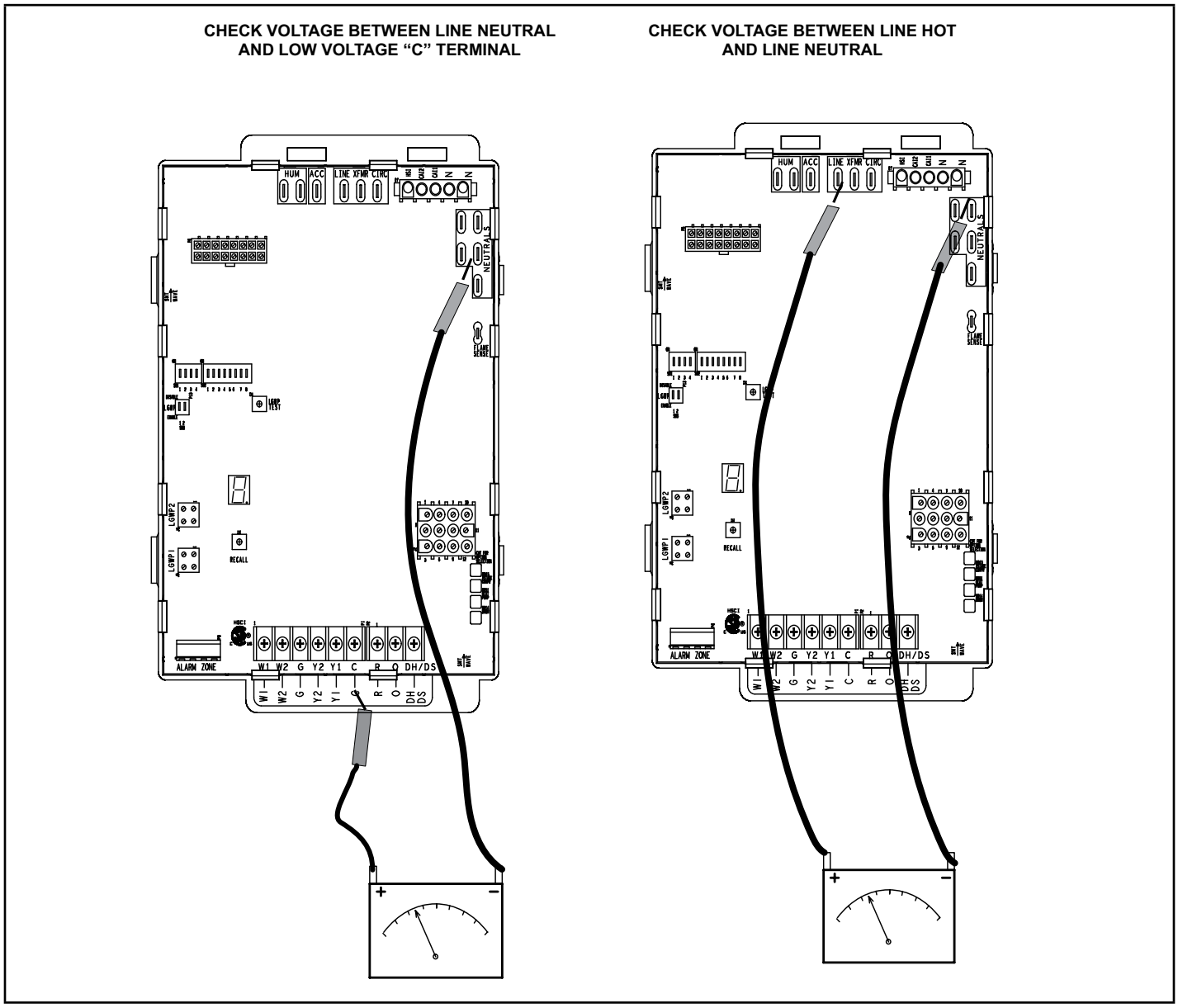

FIGURE 54

V-TYPICAL OPERATING CHARACTERISTICS

A-Blower Operation and Adjustment

1 - Blower operation is dependent on thermostat control system.

2 - Generally, blower operation is set at thermostat subbase fan switch. With fan switch in ON position, blower operates continuously. With fan switch in AUTO position, blower cycles with demand or runs continuously while heating or cooling circuit cycles.

3 - Depending on the type of indoor thermostat, blower and entire unit will be off when the system switch is in OFF position.

B-Temperature Rise (FIGURE 55)

Temperature rise for ML297DFVK(X) units depends on unit input, blower speed, blower horsepower and static pressure as marked on the unit rating plate. The blower speed must be set for unit operation within the range of "TEMP. RISE °F" listed on the unit rating plate.

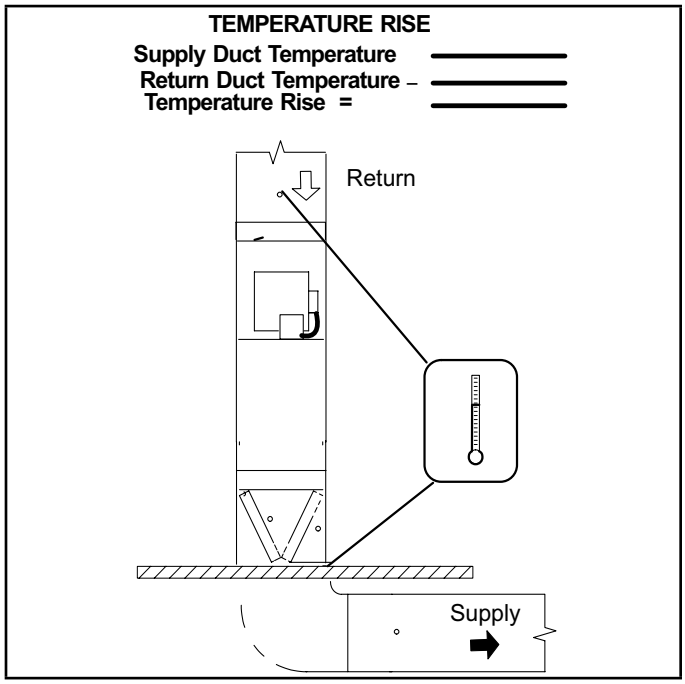

FIGURE 55

C-External Static Pressure

1 - Tap locations shown in FIGURE 56.

2 - Punch a 1/4" diameter hole in supply and return air plenums. Insert manometer hose flush with inside edge of hole or insulation. Seal around the hose with permagum. Connect the zero end of the manometer to the discharge (supply) side of the system. On ducted systems, connect the other end of manometer to the return duct as above.

3 - With only the blower motor running and the evaporator coil dry, observe the manometer reading. Adjust blower motor speed to deliver the air desired according to the job requirements. For heating speed (second stage heat speed) external static pressure drop must not be more than 0.8" W.C. For cooling speed (second stage cool speed) external static pressure drop must not be more than 1.0" W.C.

4 - Seal the hole when the check is complete.

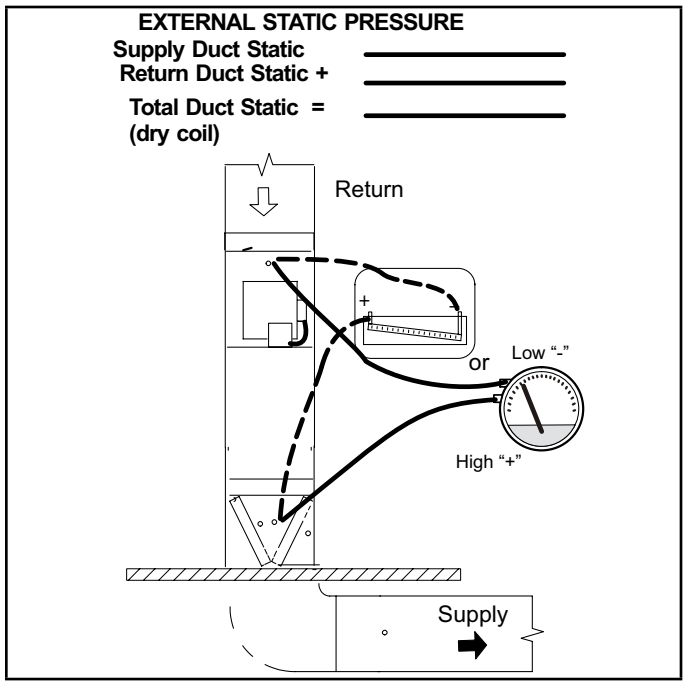

FIGURE 56

VI-MAINTENANCE

⚠ WARNING

ELECTRICAL SHOCK, FIRE, OR EXPLOSION HAZARD.

Failure to follow safety warnings exactly could result in dangerous operation, serious injury, death or property damage.

Improper servicing could result in dangerous operation, serious injury, death, or property damage. Before servicing, disconnect all electrical power to furnace.

When servicing controls, label all wires prior to disconnecting. Take care to reconnect wires correctly. Verify proper operation after servicing.

At the beginning of each heating season, system should be checked as follows by a qualified service technician:

Blower

Check the blower wheel for debris and clean if necessary. The blower motors are prelubricated for extended bearing life. No further lubrication is needed.

Low GWP Sensor

Inspect sensors and rubber sleeve

⚠ WARNING

The blower access panel must be securely in place when the blower and burners are operating. Gas fumes, which could contain carbon monoxide, can be drawn into living space resulting in personal injury or death.

Filters

All air filters are installed external to the unit. Filters should be inspected monthly. Clean or replace the filters when necessary to ensure proper furnace operation. TABLE 27 lists recommended filter sizes.

⚠ IMPORTANT

If a highefficiency filter is being installed as part of this system to ensure better indoor air quality, the filter must be properly sized. Highefficiency filters have a higher static pressure drop than standardefficiency glass/foam filters. If the pressure drop is too great, system capacity and performance may be reduced.

The pressure drop may also cause the limit to trip more frequently during the winter and the indoor coil to freeze in the summer, resulting in an increase in the number of service calls.

Before using any filter with this system, check the specifications provided by the filter manufacturer against the data given in the appropriate Lennox Product Specifications bulletin. Additional information is provided in Service and Application Note ACC002 (August 2000).

TABLE 27

Cabinet Width in.	Filter Size in.
17-1/2	16 x 25 x 1 (1)
21	

Exhaust and air intake pipes

Check the exhaust and air intake pipes and all connections for tightness and to make sure there is no blockage.

NOTE - *After any heavy snow, ice or frozen fog event the furnace vent pipes may become restricted. Always check the vent system and remove any snow or ice that may be obstructing the plastic intake or exhaust pipes.*

Electrical

1 - Check all wiring for loose connections.
2 - Check for the correct voltage at the furnace (furnace operating).
3 - Check amp-draw on the blower motor.

Motor Nameplate_____Actual_____

Winterizing and Condensate Trap Care

1 - Turn off power to the furnace.
2 - Have a shallow pan ready to empty condensate water.
3 - Remove the clean out cap from the condensate trap and empty water. Inspect the trap then reinstall the clean out cap.

Condensate Hose Screen (FIGURE 57)

Check the condensate hose screen for blockage and clean if necessary.

1 - Turn off power to the unit.
2 - Remove hose from cold end header box. Twist and pull screen to remove.
3 - Inspect screen and rinse with tap water if needed.
4 - Reinstall screen and turn on power to unit.

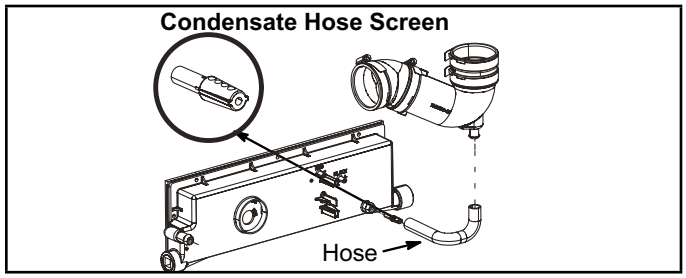

FIGURE 57

Cleaning Heat Exchanger

If cleaning the heat exchanger becomes necessary, follow the below procedures and refer to FIGURE 1 when disassembling unit. Use papers or protective covering in front of furnace while removing heat exchanger assembly.

1 - Turn off electrical and gas supplies to the furnace.
2 - Remove the furnace access panels.
3 - Disconnect the wires from the gas valve.
4 - Remove gas supply line connected to gas valve. Remove the burner box cover (if equipped) and remove gas valve/manifold assembly.
5 - Remove sensor wire from sensor. Disconnect 2-pin plug from the ignitor.
6 - Disconnect wires from flame roll-out switches.
7 - Loosen clamps at vent elbow. Disconnect condensate rain tubing from flue collar. and remove the vent elbow.
8 - Loosen clamps and remove combustion air intake flexible connector if equipped.
9 - Remove four burner box screws at the vestibule panel and remove burner box. Set burner box assembly aside.

NOTE - *If necessary, clean burners at this time. Follow procedures outlined in Burner Cleaning section.*

10 - Mark and disconnect all combustion air pressure tubing from cold end header collector box.
11 - Mark and remove wires from pressure switch assembly. Remove pressure switch assembly. Keep tubing attached to pressure switch assembly.
12 - Disconnect the plug from the combustion air inducer. Remove two screws which secure combustion air inducer to collector box. Remove combustion air inducer assembly. Remove ground wire from vest panel.
13 - Remove electrical junction box from the side of the furnace.

14 - Disconnect condensate line from cold end header box. Remove cold end header box.

15 - Loosen clamps on exhaust and air intake pipe seal plate. Slide exhaust and intake pipes up and out to clear blower deck. Remove exhaust and air intake pipe seal plate.

16 - Mark and disconnect any remaining wiring to heating compartment components. Disengage strain relief bushing and pull wiring and bushing through the hole in the blower deck.

17 - Remove the primary limit from the vestibule panel.

18 - Remove two screws from the front cabinet flange at the blower deck. Spread cabinet sides slightly to allow clearance for removal of heat exchanger.

19 - Remove screws along vestibule sides which secure vestibule panel and heat exchanger assembly to cabinet. Remove two screws from blower rail which secure top heat exchanger flange. Remove heat exchanger from furnace cabinet.

20 - Back wash heat exchanger with soapy water solution r steam. **If steam is used it must be below 275°F (135°C).**

21 - Thoroughly rinse and drain the heat exchanger. Soap solutions can be corrosive. Take care to rinse entire assembly.

22 - Reinstall heat exchanger into cabinet making sure that the clamshells of the heat exchanger assembly are engaged properly into the support bracket on the blower deck. Remove the indoor blower to view this area through the blower opening.

23 - Re-secure the supporting screws along the vestibule sides and top to the cabinet.

24 - Reinstall cabinet screws on front flange at blower deck.

25 - Reinstall the primary limit on the vestibule panel.

26 - Route heating component wiring through hole in blower deck and reinsert strain relief bushing.

27 - Reinstall electrical junction box.

28 - Reinstall exhaust and air intake pipe seal plate. Reinstall exhaust and air intake pipes and tighten clamps on pipe seal plate.

29 - Reinstall the cold end header box.

30 - Reinstall the combustion air inducer. Reconnect the combustion air inducer to the wire harness.

31 - Reinstall pressure switch assembly and reconnect pressure switch wiring.

32 - Carefully connect combustion air pressure switch tubing from pressure switches to proper ports on cold end header collector box.

33 - Reinstall condensate trap.

34 - Secure burner box assembly to vestibule panel using four existing screws. Make sure burners line up in center of burner ports.

35 - exhaust piping and exhaust drain tubing.

36 - Reconnect flame roll-out switch wires.

37 - Reconnect sensor wire and reconnect 2-pin plug from ignitor.

38 - Reinstall gas valve manifold assembly. Reconnect gas supply line to gas valve.

39 - Reinstall burner box cover if equipped.

40 - Reconnect plug to gas valve.

41 - Replace the blower compartment access panel.

42 - Follow lighting instructions on unit nameplate to light and operate furnace for 5 minutes to ensure the furnace is operating properly.

43 - Check all piping connections, factory and field, for gas leaks. Use a leak detecting solution or other preferred means.

⚠ CAUTION

Some soaps used for leak detection are corrosive to certain metals. Carefully rinse piping thoroughly after leak test has been completed. Do not use matches, candles, flame or other sources of ignitionto check for gas leaks.

44 - Replace access panel.

Cleaning the Burner Assembly (if needed)

1 - Turn off electrical and gas power supplies to furnace.

2 - Disconnect the 2-pin plug from the gas valve.

3 - Remove the burner box cover (if equipped).

4 - Disconnect the gas supply line from the gas valve. Remove gas valve/manifold assembly.

5 - Loosen clamps and remove combustion air intake flexible connector (if equipped).

6 - Mark and disconnect sensor wire from the sensor. Disconnect plug from the ignitor at the burner box.

7 - Remove four screws which secure burner box assembly to vest panel. Remove burner box from the unit.

8 - Use the soft brush attachment on a vacuum cleaner to gently clean the face of the burners. Visually inspect the inside of the burners and crossovers for any blockage caused by foreign matter. Remove any blockage.

9 - Reinstall the burner box assembly using the existing four screws. Make sure that the burners line up in the center of the burner ports.

10 - Reconnect the sensor wire and reconnect the 2-pin plug to the ignitor wiring harness.

11 - Reinstall combustion air intake flexible connector (if equipped), secure using existing clamps.

12 - Reinstall the gas valve manifold assembly. Reconnect the gas supply line to the gas valve. Reinstall the burner box cover.

13 - 1Reconnect plug to gas valve.

14 - Replace the blower compartment access panel.

15 - Refer to instruction on verifying gas and electrical connections when re-establishing supplies.

16 - Follow lighting instructions to light and operate furnace for 5 minutes to ensure that heat exchanger is clean and dry and that furnace is operating properly. Replace access panel.

VII-Low GWP Application

⚠ WARNING

For use with Lennox approved evaporator coil and LGWP sensors only. Use original manufacturer recommended LGWP sensors if using non Lennox approved evaporator coil.

CONNECTING THE FURNACE CONTROL BOARD SENSOR.

See FIGURE 60 and follow steps below:

1 - Route sensor wire #1 through provided grommet.

2 - Avoid sharp edges when routing sensor wire during installation.

3 - Sensor wire must not block view of 7 segment LED .

Ensure the cable is properly seated into the SENSOR 1 plug (LGWP1). The Molex plug clip should lock into the Molex connection point for a secured connection, as shown below in FIGURE 58. Verify the connection is free of dust, debris, and moisture.

NOTE - *In confined space applications, connect the second sensor to the SENSOR 2 plug (LGWP2). Refer to evaporator coil installation instructions for more detail.*

Two Stage Variable Speed Control

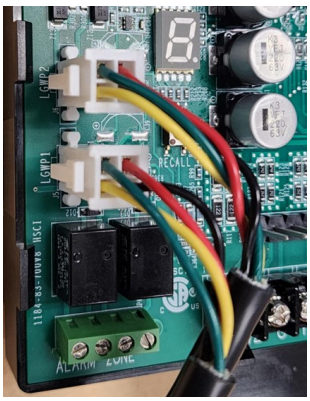

FIGURE 58

LOW GWP DIP SWITCH SETTINGS

Adjust the DIP switch settings to the sensor configuration. Failure to do so will cause faults on power-up. See FIGURE 59 and TABLE 28.

FIGURE 59

TABLE 28

DIP Switch Settings

Configuration	LGWP1	LGWP2
One (1) sensor, connected to SENSOR 1 plug	Enable	Disable
Two (2) sensors, connected to SENSOR 1 plug and SENSOR 2 plug	Enable	Enable
No sensor R410A or heat only applications	Disable	Disable
Invalid Configuration	Disable	Enable

In single sensor configurations, the sensor must be connected to the SENSOR 1 plug (LGWP1). Configurations other than the ones shown in TABLE 30 will cause a servicing fault.

Each DIP switch corresponds to a sensor position (i.e., DIP switch 1 to sensor 1; DIP switch 2 to sensor 2). The default factory switch positions are set to ENABLED.

The furnace control board software reads the ENABLE position as an active sensor. A sensor should be present for the corresponding sensor connector. Setting the DIP switch to DISABLE disables the sensor position.

SECONDARY SENSOR REQUIREMENTS

Additional Line Sets

If additional refrigerant line joints are present outside of the line set sleeve and a secondary refrigerant detection sensor is required, its installation must comply with the requirement listed in Refrigeration Detection Sensor kit (27V53). See FIGURE 60 for routing the secondary sensor cable through the furnace cabinet.

Non-Low GWP Applications

⚠ WARNING

For Furnace only applications or Furnace replacement in a Non-Low GWP applications, the LOW GWP sensors should be disabled, otherwise the blower will operate continuously. To do this, the Low GWP Dip switches setting for both – Sensor 1 and the Sensor 2 must be moved to the DISABLE position.

FURNACE CONTROL BOARD LOW GWP MODES OF OPERATION

The modes of operation for the furnace control board are Initializing, Normal, Leak Detected, and Fault.

Initializing

The furnace control board is establishing connection with the refrigerant detection sensor and is completing an initial five-minute purge sequence.

Normal

The HVAC system is functioning normally. The furnace control board has not detected a refrigerant leak.

Leak Detected

When the furnace control board detects a refrigerant leak:

1. The furnace control board shuts off the (R) input (24VAC power) to the thermostat, which de-energizes the outdoor unit compressor and heat sources, such as gas and/or electric strip heat. No heating or cooling demands will be met.
2. The furnace control board activates the blower (high speed). The blower purges refrigerant from the cabinet, plenum, and ductwork.
3. After the furnace control board determines the refrigerant levels are below the safety threshold, the blower will continue to operate for the remainder of the seven (7) -minute cycle.
4. After the blower sequence is complete, the HVAC system resumes normal operation.

NOTE - *The HVAC system may not maintain a cooling or heating setpoint if a significant leak exists. Any refrigerant leaks that remain unaddressed for an extended time may cause the HVAC system to shut down on a low refrigerant pressure limit condition.*

Fault

When a Low GWP fault is detected by the furnace control board, the indoor unit blower engages and remains engaged at a constant air flow output until the fault is cleared.

NOTE - See TABLE 4 igntion control diagnostic codes.

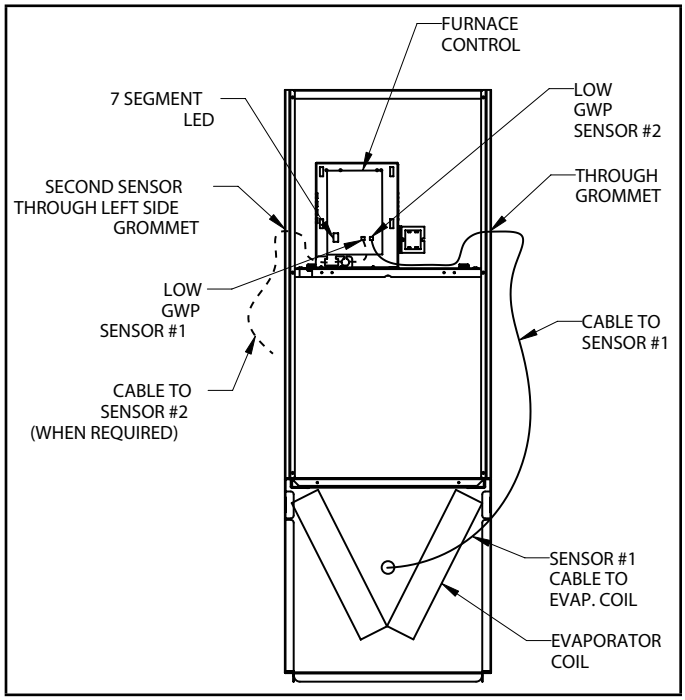

FIGURE 60

LGWP TEST BUTTON FUNCTIONALITY

The furnace control board is equipped with a Test/Reset push button. The Test button can be used to perform several functions, depending on the mode of operation of the furnace control board.

TABLE 29 lists the functions of the Test button during each mode of operation.

TABLE 29

LGWP Test Button Function

Mode of Operation	Press the Test Button to:
Normal	Trigger a leak detection response. Verify all equipment is wired correctly into the furnace blower control board (after installation).
Leak Detected	Reset the furnace control board to a normal mode of operation after a previous leak has been detected and purged from the HVAC system
Fault	Reset the furnace control board after troubleshooting and resolving a fault condition. If the fault is not resolved, the furnace control board will enter the Fault mode again.

LGWP Test Button - Additional Functions

TABLE 30 lists the additional functions of the Test Button while the furnace control board is functioning within the states of Initializing, Monitoring, Leak Detection, Servicing and Fault.

TABLE 30

Additional Button Functions

State	Press	Action
Initializing	Short	Skips remaining pre-purge after sensors are recognized by the furnace control board
Initializing	Long	Reset control
Monitoring	Short	Clear purge-counter if prior mitigation has occurred; Test mitigation
Monitoring	Long	Reset control
Mitigating	Short	If testing mitigation, end test
Servicing	Short	Reevaluate fault condition - if cleared return to monitoring, otherwise update indicator
Servicing	Long	Reset control
Fault	Short	Reevaluate fault condition - if cleared return to monitoring, otherwise update indicator
Fault	Long	Reset control

External Alarm

(*For applications with external alarms wired directly to the furnace control board*)

The furnace control board triggers the external alarm system when it enters Leak Detected mode. For alarm notifications, the furnace control board provides a dry relay contact that is rated 3A at 30 VAC/DC.

THERMOSTAT COMPATIBILITY

Thermostats that preserve memory settings are compatible with the furnace control board. Examples include:

- Battery-powered thermostats
- Analog thermostats
- Late-model programmable thermostats

NOTE - *Early-generation digital and programmable thermostats may not retain the operation mode and temperature setpoints after a power outage.*

The following scenarios are likely to occur when home occupants are not available to adjust the thermostat setpoints as the system is recovering from leak detection and resuming normal operation:

- Heating could be lost during a cold night
- Cooling could be lost during a hot day
- The thermostat could reset to an incorrect temperature setpoint

START UP PROCEDURE

The furnace control board is equipped with a LGWP Test/Reset button, see “Test Button Functionality”. After the furnace control board has been mounted and wired, restore power to the HVAC system. The system will then run through a purge sequence for five minutes. After the purge sequence is complete, proceed to testing cooling demand and heating demand.

Cooling Demand

1. Prompt a cooling demand at the thermostat.
2. Press the LGWP Test button on the furnace control board.

   The system then executes a leak detection response.
3. Observe the following sequence:
   a. The LED indicator for leak detection. See TABLE 4.
   b. The blower powers up.
   c. The outdoor compressor powers down.
4. Press the LGWP Test button to terminate the simulated Leak Detected mode upon test completion.
   a. See TABLE 4 igntion control diagnostic code

Heating Demand

1. Prompt a heating demand at the thermostat.
2. Observe the following sequence:
   a. The LED indicator for leak detection See TABLE 4 igntion control diagnostic codes.
   b. The blower powers up.
   c. The gas burners power down.
   d. The outdoor compressor powers down.
3. Press the LGWP Test button to terminate the simulated Leak Detected mode upon test completion.

The installation of the furnace control board is complete after both sequences are successfully completed.

VIII- Unit Diagram, Sequence of Operation and DIP Switch Settings

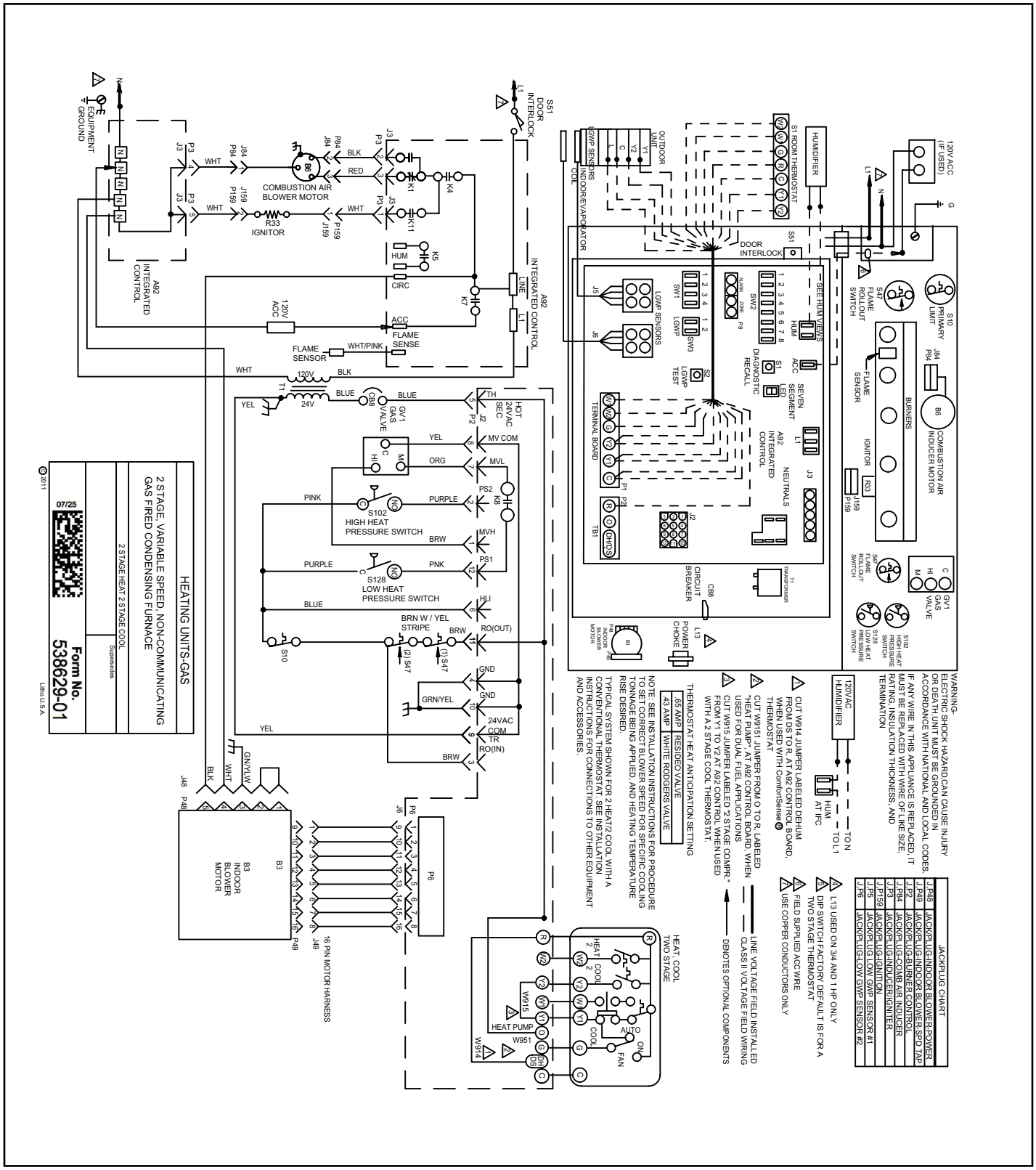

Heating Sequence of Operation

Electronic Ignition

The two-stage, variable speed integrated control used in this furnace has an added feature of an internal Watchguard control. The feature serves as an automatic reset device for ignition control lockout caused by ignition failure. After one hour of continuous thermostat demand for heat, the Watchguard will break and remake thermostat demand to the furnace and automatically reset the control to begin the ignition sequence.

NOTE - *The ignition control thermostat selection DIP switch is* factory-set in the "TWO-STAGE" position.

Applications Using a Two-Stage Thermostat

A - Heating Sequence -- Integrated Control Thermostat Selection DIP Switch 1 OFF in "Two-Stage" Position (Factory Setting)

1 - On a call for heat, thermostat first-stage contacts close sending a signal to the integrated control. The integrated control runs a self-diagnostic program and checks high temperature limit switches for normally closed contacts and pressure switches for normally open contacts. The combustion air inducer is energized at low speed.

2 - Once the control receives a signal that the low pressure switch has closed, the combustion air inducer begins a 15-second pre-purge in low speed.

NOTE - *If the low fire pressure switch does not close the combustion air inducer will switch to high fire. After a 15 second pre-purge the high fire pressure switch will close and the unit will begin operation on high fire. After 10 to 20 seconds of high fire operation the unit will switch to low fire.*

3 - After the pre-purge is complete, a 20-second initial ignitor warm-up period begins. The combustion air inducer continues to operate at low speed.

4 - After the 20-second warm-up period has ended, the gas valve is energized on low fire (first stage) and ignition occurs. At the same time, the control module sends a signal to begin an indoor blower 30-second ON-delay. When the delay ends, the indoor blower motor is energized on the low fire heating speed, the HUM contacts close energizing the humidifier and 120V ACC terminal is energized. The furnace will continue this operation as long as the thermostat has a first-stage heating demand.

5 - If second-stage heat is required, the thermostat second- stage heat contacts close and send a signal to the integrated control. The integrated control initiates a 30-second second-stage recognition delay.

6 - At the end of the recognition delay, the integrated control energizes the combustion air inducer at high speed. The control also checks the high fire (second stage) pressure switch to make sure it is closed. The high fire (second stage) gas valve is energized and the indoor blower motor is energized for operation at the high fire heating speed.

7 - When the demand for high fire (second stage) heat is satisfied, the combustion air inducer is switched to the low-fire heating speed and the high-fire (second stage) gas valve is de-energized. The low-fire (first stage) gas valve continues operation. The indoor blower motor is switched to the low-fire heating speed.

8 - When the thermostat demand for low-fire (first stage) heat is satisfied, the gas valve is de-energized and the field-selected indoor blower off delay begins. The combustion air inducer begins a 5-second post-purge period.

9 - When the combustion air post-purge period is complete, the inducer and the HUM contacts are de-energized. The indoor blower is de-energized at the end of the off delay as well as the ACC terminals.

Applications Using A Single-Stage Thermostat

B - Heating Sequence -- Integrated Control Thermostat Selection DIP Switch 1 ON in "Single-Stage" Position

NOTE - *In these applications, two-stage heat will be initiated by the integrated control if heating demand has not been satisfied after the field adjustable period (7 or 12 minutes).*

1 - On a call for heat, thermostat first-stage contacts close sending a signal to the integrated control. The integrated control runs a self-diagnostic program and checks high temperature limit switches for normally closed contacts and pressure switches for normally open contacts. The combustion air inducer is energized at low speed.

2 - Once the control receives a signal that the low pressure switch has closed, the combustion air inducer begins a 15-second pre-purge in low speed.

NOTE - *If the low fire pressure switch does not close the combustion air inducer will switch to high fire. After a 15 second pre-purge the high fire pressure switch will close and the unit will begin operation on high fire. After 10 to 20 seconds of high fire operation the unit will switch to low fire.*

3 - After the pre-purge is complete, a 20-second initial ignitor warm-up period begins. The combustion air inducer continues to operate at low speed.

4 - After the 20-second warm-up period has ended, the gas valve is energized on low fire (first stage) and ignition occurs. At the same time, the control module sends a signal to begin an indoor blower 30-second ON-delay. When the delay ends, the indoor blower motor is energized on the low fire heating speed and the HUM contacts are energized. The integrated control also initiates a second-stage on delay (factory-set at 7 minutes; adjustable to 12 minutes).

5 - If the heating demand continues beyond the secondstage on delay, the integrated control energizes the combustion air inducer at high speed. The control also checks the high fire (second stage) pressure switch to make sure it is closed. The high fire (second stage) gas valve is energized and the indoor blower motor is energized for operation at the high fire heating speed.

6 - When the thermostat heating demand is satisfied, the combustion air inducer begins a 5-second low speed post-purge. The field-selected indoor blower off delay begins. The indoor blower operates at the low-fire heating speed.

7 - When the combustion air post-purge period is complete, the inducer and the HUM contacts are de-energized. The indoor blower is de-energized at the end of the off delay as well as the 120 ACC terminals.

⚠ WARNING

The system must not be in either the passive or active dehumidification mode when charging a cooling system.

Cooling

The unit is set up at the factory for single stage cooling. For two stage cooling operation, clip the jumper wire located between the Y to Y2 terminals on the integrated ignition/ blower control board. If the active dehumidification feature is enabled, the circulating blower runs at 70% of the selected cooling speed as long as there is a call for dehumidification.

Single Stage Cooling

A call for cooling from the thermostat closes the R to Y circuit on the integrated ignition/blower control board. The control waits for a 1-second delay before energizing the circulating blower to 82% of the selected cooling CFM (passive dehumidification mode). After 7.5 minutes, the circulating blower automatically ramps up to 100% of the selected cooling airflow. When the call for cooling is satisfied, the circulating blower runs at cooling speed for 45 seconds then shuts down.

Two-Stage Cooling

A call for 1st stage cooling from the thermostat closes the R to Y circuit on the control board. The control waits for a 2- second delay before energizing the circulating blower. The blower motor runs at 57% of the selected air flow for the first 7.5 minutes of the 2nd stage cooling demand (passive dehumidification mode). After 7.5 minutes, the blower motor runs at 70% of the selected cooling air flow until 1st stage cooling demand is satisfied.

A call for 2nd stage cooling from the thermostat closes the R to Y2 circuit on the control board. The blower motor ramps up to 100% of the selected cooling air flow. When the demand for cooling is met, the blower ramps down to Y1 until satisfied, then runs on low cool speed for 45 seconds then shuts down.

Heat Pump

For heat pump operation, clip the jumper wire located bellow the O terminal on the integrated ignition/blower control board. In heat pump mode, a call for heat will result in the circulating air blower operating at the selected cooling airflow with no ramp-up period.

Thermostat	DIP Switch Settings and On-Board Links		Wiring Connections
	DIP Switch 1 Thermostat Heating Stages	On Board Links Must Be Cut To Select System Options	
1 Heat / 1 Cool *NOTE - Use DIP switch 2 to set second-stage heat ON delay. OFF-7 minutes. ON-12 minutes.* (L40 T-stat)	ON	DO NOT CUT ANY ON-BOARD LINKS 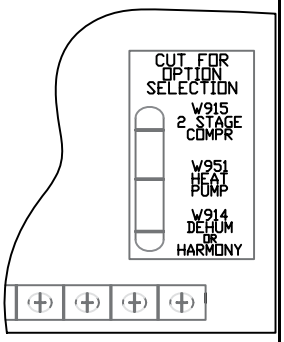	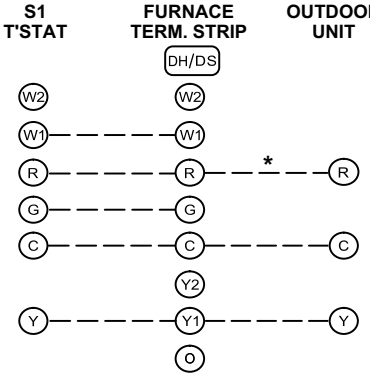
1 Heat / 2 Cool *NOTE - Use DIP switch 2 to set second-stage heat ON delay. OFF-7 minutes. ON-12 minutes.* (M30 T-stat)	ON	CUT ON-BOARD LINK W915 2 STAGE COMPR 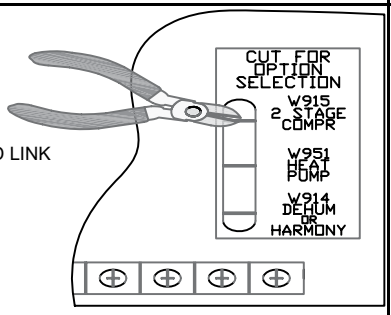	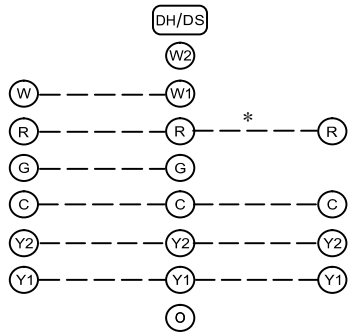
1 Heat / 2 Cool with t'stat with humidity control *NOTE - Use DIP switch 2 to set second-stage heat ON delay. OFF-7 minutes. ON-12 minutes.* (M30 T-stat)	ON	CUT ON-BOARD LINK W915 2 STAGE COMPR CUT ON-BOARD LINK W914 DEHUM OR HARMONY 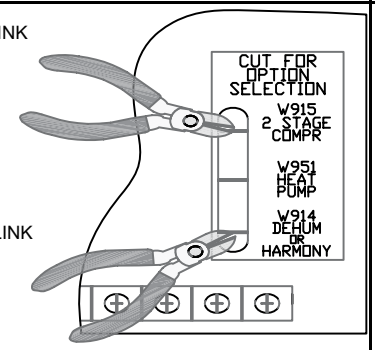	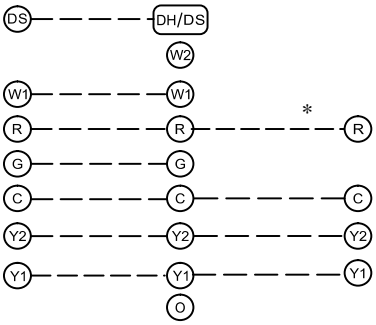

** Not required on all units.*

Thermostat	DIP Switch Settings and On-Board Links		Wiring Connections
	DIP Switch 1 Thermostat Heating Stages	On Board Links Must Be Cut To Select System Options	
2 Heat / 2 Cool (M30 T-stat)	OFF	CUT ON-BOARD LINK W915 2 STAGE COMPR CUT FOR OPTION SELECTION W915 2 STAGE COMPR W951 HEAT PUMP W914 DEHUM OR HARMONY	S1 T'STAT / FURNACE TERM. STRIP / OUTDOOR UNIT DH/DS W2 — W2 W1 — W1 R — R — * — R G — G C — C — C Y2 — Y2 — Y2 Y1 — Y1 — Y1 O
2 Heat / 2 Cool with t'stat with humidity control (M30 T-stat)	OFF	CUT ON-BOARD LINK W915 2 STAGE COMPR CUT ON-BOARD LINK W914 DEHUM OR HARMONY CUT FOR OPTION SELECTION W915 2 STAGE COMPR W951 HEAT PUMP W914 DEHUM OR HARMONY	S1 T'STAT / FURNACE TERM. STRIP / OUTDOOR UNIT DS — DH/DS W2 — W2 W1 — W1 R — R — * — R G — G C — C — C Y2 — Y2 — Y2 Y1 — Y1 — Y1 O
2 Heat / 1 Cool with t'stat with humidity control (M30 T-stat)	OFF	CUT ON-BOARD LINK W914 DEHUM OR HARMONY CUT FOR OPTION SELECTION W915 2 STAGE COMPR W951 HEAT PUMP W914 DEHUM OR HARMONY	S1 T'STAT / FURNACE TERM. STRIP / OUTDOOR UNIT DS — DH/DS W2 — W2 W1 — W1 R — R — * — R G — G C — C — C Y1 — Y1 — Y1 Y2 O
2 Heat / 1 Cool (M30 T-stat)	OFF	DO NOT CUT ANY ON-BOARD LINKS CUT FOR OPTION SELECTION W915 2 STAGE COMPR W951 HEAT PUMP W914 DEHUM OR HARMONY	S1 T'STAT / FURNACE TERM. STRIP / OUTDOOR UNIT DH/DS W2 — W2 W1 — W1 R — R — * — R G — G C — C — C Y2 Y — Y1 — Y1 O

** Not required on all units.*

Thermostat	DIP Switch Settings and On-Board Links		Wiring Connections
	DIP Switch 1 Thermostat Heating Stages	On Board Links Must Be Cut To Select System Options	
Dual Fuel Single Stage Heat Pump (M30 T-stat) thermostat w/ dual fuel capa-bilities Capable of 2 stage gas heat control	OFF	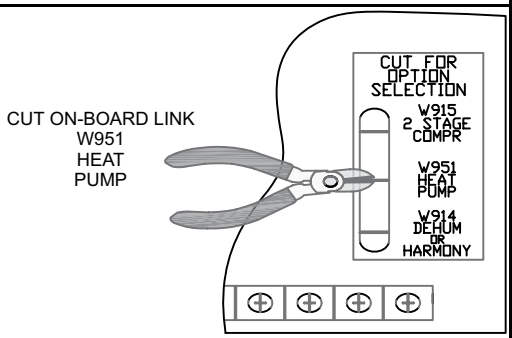	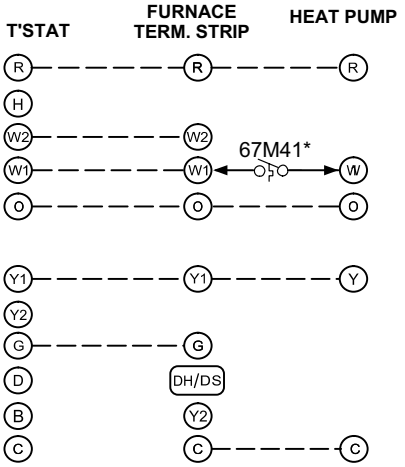
Dual Fuel Two Stage Heat Pump (M30 T-stat) thermostat w/ dual fuel capa-bilities Capable of 2 stage gas heat control	OFF	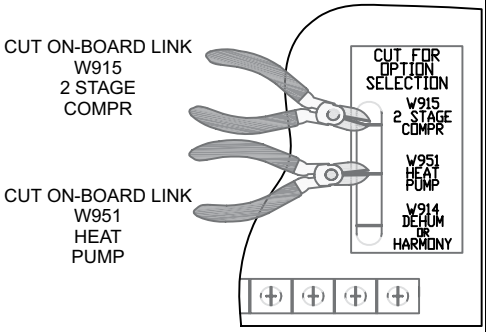	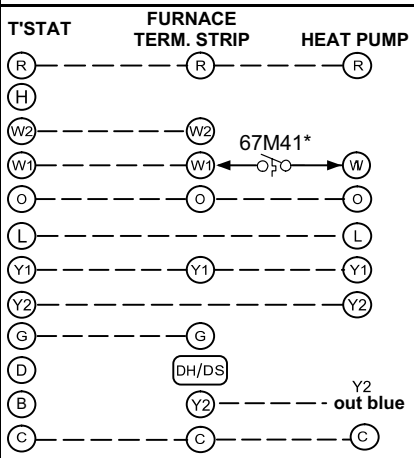

** Connect W1 to W1 ONLY if using defrost tempering kit 67M41*

*NOTE - **Do NOT** make a wire connection between the room thermostat L terminal and the L terminal of the furnace integrated control.*

Thermostat	DIP Switch Settings and On-Board Links		Wiring Connections
	DIP Switch 1 Thermostat Heating Stages	On Board Links Must Be Cut To Select System Options	
Dual Fuel Single Stage Heat Pump (M30 T-stat) thermostat w/ dual fuel capa-bilities Capable of 2 stage gas heat control w/dehu-midification control	OFF	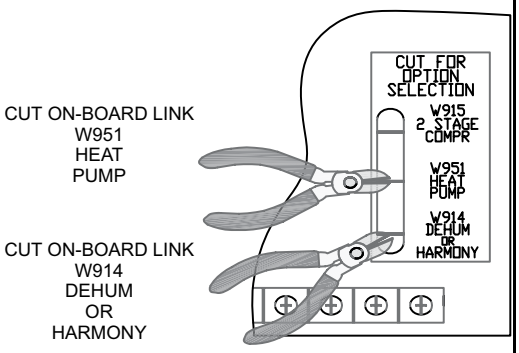	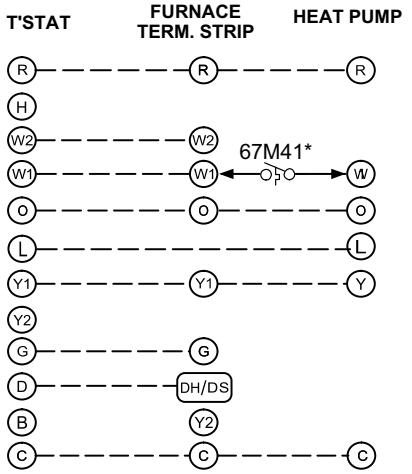
Dual Fuel Two Stage Heat Pump (M30 T-stat) thermostat w/ dual fuel capa-bilities Capable of 2 stage gas heat control w/dehu-midification	OFF	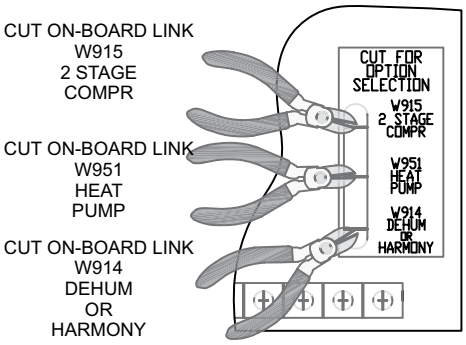	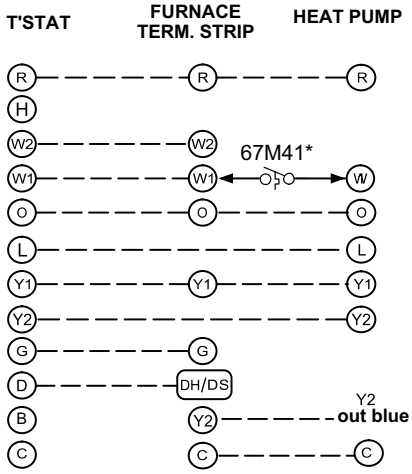

** Connect W1 to W1 ONLY if using defrost tempering kit 67M41*

*NOTE - **Do NOT** make a wire connection between the room thermostat L terminal and the L terminal of the furnace integrated control.*