SL25KCV

DAVE LENNOX *SIGNATURE*® COLLECTION

Variable Capacity | Precise Comfort® Technology | Quantum™ Coil| R-454B | 60Hz

RESIDENTIAL
PRODUCT SPECIFICATIONS (EHB)

2 to 5 Tons
SEER2 up to 26.0
Cooling Capacity | 21,800 to 57,000 Btuh

S40 Smart Wi-Fi
Communicating Thermostat
(Required - Not Furnished)

DAVE LENNOX signature® COLLECTION

LENNOX QUANTUM™ COIL

MODEL NUMBER IDENTIFICATION

SL 25 K C V - 036 - 230 A 01

Product Tier
SL = Dave Lennox *Signature*® Collection

Nominal SEER2
25= 25.0 to 26.0

Refrigerant Type
K= R-454B

Unit Type
C = Air Conditioner (Condenser)

Cooling Stages
V =Variable Capacity Compressor

Nominal Cooling Capacity
024 = 2 tons
036 = 3 tons
048 = 4 tons
060 = 5 tons

Voltage
230 = 208/230V-1ph-60Hz

Ratings Revision Level

Revision Level

Form Number 211060 | October 2026
Supersedes all previous versions

FEATURE HIGHLIGHTS

1. Outdoor Coil Fan with SilentComfort™ Technology
2. Variable-Speed Outdoor Coil Fan Motor With Integrated Control
3. Quantum™ Coil
4. Low Pressure Transducer
5. High Pressure Transducer
6. High Pressure Switch
7. High Capacity Liquid Line Drier
8. Variable Capacity Scroll Compressor
9. Accumulator
10. DC Inverter Control
11. Lennox® Communicating Control
12. Composite Unit Top and Base
13. Louvered Steel Coil Protection
14. Refrigerant Line Connections and Access

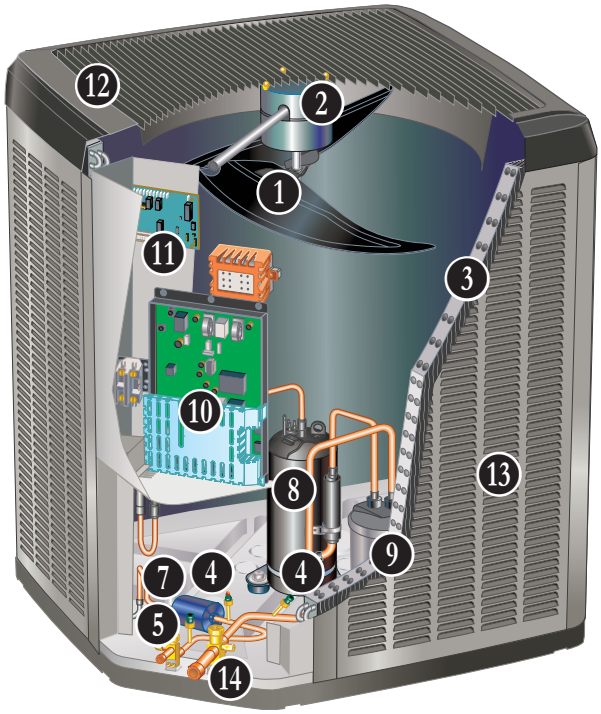

NOTE - SL25KCV MODELS CAN ONLY BE MATCHED WITH LENNOX® COMMUNICATING VARIABLE-SPEED INDOOR FURNACES AND AIR HANDLERS.

NOTE - SL25KCV MODELS CAN ONLY BE USED WITH A LENNOX COMMUNICATING THERMOSTAT.

CONTENTS

Approvals And Warranty 3
Controls Required 7
Dimensions 10
Expanded Sound Data 9
Features 3
Field Wiring 9
Installation Clearances 9
Model Number Identification. 1
Optional Accessories - Order Separately 8
Optional Controls - Order Separately 8
Specifications 8
TXV Substitution - R-454B 11
TXV Usage. 11

APPROVALS AND WARRANTY

APPROVALS

- AHRI Standard 210-240-2023 certified
- AHRI Standard 1380 Demand Response compatible
- AHRI Certified system match-ups and expanded ratings, visit www.LennoxPros.com
- Sound rated to AHRI Standard 270 test conditions
- Tested in Lennox' Research Laboratory environmental test room
- Rated According to U.S. Department of Energy (DOE) test procedures
- Unit and components ETL, NEC, and CEC bonded for grounding to meet safety standards for servicing
- ETL certified (U.S. and Canada)
- ISO 9001 Registered Manufacturing Quality System

WARRANTY

- Compressor:
  - Limited ten years in residential installations
  - Limited five years in non-residential installations
- All other covered components:
  - Limited ten years in residential installations
  - Limited one year in non-residential installations

NOTE - Refer to Lennox® Basic Limited Warranty at www.Lennox.com for additional details.

FEATURES

APPLICATIONS

- 2 through 5 tons
- Sound levels as low as 58 dBA
- Single phase power supply
- Applicable to indoor air handlers or gas furnaces with indoor add-on coils
- Suitable for coastal areas
- Shipped completely factory assembled, piped and wired
- Factory test operated

NOTE - The SL25KCV can only be matched with Lennox®-enabled variable-speed indoor furnaces and air handlers.

REFRIGERATION SYSTEM

R-454B Refrigerant

- Low GWP (Global Warming Potential)
- Zero ODP (Ozone Depletion Potential)
- Low Toxicity/Lower Flammability - A2L
- Unit is factory pre-charged

NOTE - Total system refrigerant charge is dependent on outdoor unit size, indoor unit size and refrigerant line length.

NOTE - Refer to the unit-mounted charging sticker to determine correct amount of charge required.

1 Outdoor Coil Fan with SilentComfort™ Technology

- Specially-designed, SilentComfort™ fan guard uses Passive Vortex Suppression to reduce air noise
- Fan guard constructed of corrosion-resistant PVC (polyvinyl chloride) coated steel
- Specially designed fan blades reduce operating sound levels
- Direct drive fan moves large air volumes uniformly through entire condenser coil for high refrigerant cooling capacity
- Vertical air discharge
- Fan service access by removal of fan guard

2 Variable-Speed Outdoor Coil Fan Motor With Integrated Control

- Programmed for variable capacity operation
- Fan speed is directly controlled by the communications between the Lennox® outdoor unit communicating control and the Lennox® communicating thermostat
- Inherently protected
- Totally enclosed

3 Quantum™ Coil

- Enhanced aluminum alloy tube/enhanced fin coil
- Superior corrosion resistance
- Lennox designed and fabricated coil
- Ripple-edged aluminum fins
- Aluminum tube construction
- Lanced fins for maximum fin surface exposure
- Fin collars grip tubing for maximum contact area
- Flared shoulder tubing connections
- Factory tested under high pressure
- Entire coil is accessible for cleaning

4 Low Pressure Transducer

- Protects the compressor from low pressure conditions such as low refrigerant charge, or low/no indoor airflow
- Shuts off unit if suction pressure falls below setting
- Provides loss of charge protection

REFRIGERATION SYSTEM (continued)

5 High Pressure Transducer
- Measures pressure in the liquid line
- Pressure readings are used to calculate subcooling values to assist with charging

6 High Pressure Switch
- Protects the system from high pressure conditions that can be a result of fan failure or a blocked/dirty coil
- Automatic reset

7 High Capacity Liquid Line Drier
- Factory installed in the liquid line
- Drier traps moisture or dirt that could contaminate the system.
- 100% molecular-sieve, bead type, drier

Optional Accessories

Expansion Valve Kits
- Field installed on indoor units (if required)
- See TXV Usage table
- Chatleff style fitting

Freezestat
- Protects the system from ice buildup on the indoor coil due to conditions such as low/no airflow, or low refrigerant charge
- Cycles compressor off when suction line temperature falls below its setpoint
- Opens at 29°F and closes at 58°F
- Installs on or near the discharge line of the evaporator or on the suction line

Refrigerant Line Kits
- Refrigerant lines are shipped refrigeration clean
- Lines are cleaned, dried, pressurized, and sealed at factory
- Suction line fully insulated
- Lines are stubbed at both ends

NOTE - The SL25KCV is a variable capacity air conditioner utilizing variable speed compressor technology. With the variable speed compressor and variable pumping capacity, additional consideration must be given to refrigerant piping sizing and application.
Refer to the Installation Instructions for Line Set Requirements and Refrigerant Piping Guidelines.

INDOOR REFRIGERANT DETECTION SYSTEM (RDS)

- Complies with UL 60335-2-40 approved standard
- Required for all systems using R-454B refrigerant
- Factory or field installed on all indoor units
- Consists of a RDS refrigerant detection sensor and a mitigation control in the indoor unit
- Ensures safe operation for systems equipped with R-454B refrigerant
- Indoor sensor will detect any R-454B refrigerant
- If R-454B refrigerant is detected, the refrigerant detection system will stop compressor operation and operate the blower to reduce concentrations in the conditioned space
- Once safe levels are reached the HVAC system will resume normal operation
- Refer to indoor unit Product Specifications documents for additional details

PRECISE COMFORT® TECHNOLOGY

The Variable Capacity Compressor and DC Inverter Control is an integrated system that operates together to reduce overall energy usage when compared to conventional air conditioners.

8 Variable Capacity Scroll Compressor
- Operates on a variable frequency determined by the DC Inverter Control to vary capacity based on the cooling load required
- High volumetric efficiency
- Uniform suction flow
- Constant discharge flow
- Quiet operation

9 Accumulator
- Standard in all models

Compressor Crankcase Heater
- Crankcase heater prevents migration of liquid refrigerant into compressor and ensures proper compressor lubrication
- Factory Installed

Compressor Sound Dampening System
- Comprised of a vinyl and polyester composite
- Inner and outer layer sound cover furnished on 4 and 5 ton units only
- Inner layer sound cover furnished on 2 and 3 ton units only
- All open edges sealed with one-inch wide hook and loop fastening tape
- Rubber dampeners furnished on 3, 4, and 5 ton units to decrease sound levels

PRECISE COMFORT® TECHNOLOGY (continued)

10 DC Inverter Control

- Converts AC line voltage into filtered variable DC voltage
- Provides continuous compressor operation, while adjusting the capacity according to indoor temperature
- Adjusts compressor output in increments as small as 1%
- The accurate sensing of cooling load prevents frequent changes in capacity and ensures efficient, economical operation
- Power Factor Correction (PFC) circuit monitors the DC bus for high, low and abnormal voltage conditions to protect the compressor
- Integrated noise filter reduces unwanted electromagnetic interference (EMI)
- The inverter reactor (mounted separately) adds inductance to the line between the inverter and the compressor to limit current rise and protect the compressor

CONTROLS

11 Lennox® Communicating Control

- Advanced control communicates information about various operating parameters in the air conditioner to the Lennox® Communicating Thermostats to constantly maintain the highest level of comfort, performance and efficiency available
- Auto Configuration - On start-up the control automatically sends a description of the unit to the Lennox® Communicating Thermostat to automatically configure the features available
- Control Features:
  - Seven-Segment Display - Shows information about outdoor unit type and capacity and also displays alerts for common fault conditions (electrical and mechanical)
  - Low Voltage Protection - Prevents compressor operation when voltage is not within the specified range
  - High and low pressure transducer monitoring with provisions for lockout
  - Five-Strike lockout protection protects compressor
  - Liquid line temperature and sensor monitoring
  - EEPROM storage of all local configurations
  - Non-volatile memory storage of 100 alarm codes with display of last 10 codes for troubleshooting
  - Built-in low-ambient control

NOTE - A 6-pin RAST connector is also provided for outdoor unit wiring connections to the control.

Low Ambient Operation

- Air conditioner can operate down to 0°F outdoor air temperature

NOTE - A freezestat is recommended for extra protection during low ambient operation.

Climate IQ™ Technology

- Optimizes dehumidification settings for specific climates to improve home comfort during cooling operation
- S40 Thermostat Setting:
  - Climate IQ (Auto) - Dry, Normal, Basic and Humid modes are automatically set based on the difference between the measured relative humidity and the relative humidity setting
- All modes are selected on the Lennox® Communicating Thermostat

Outdoor Air Temperature Sensor

- Used with Lennox® Communicating Thermostats
- Sensor allows thermostat to display outdoor temperature
- Sensor is auto-detected when connected to thermostat

REQUIRED COMPONENTS

NOTE - The SL25KCV Air Conditioner can only be used with a Lennox® Communicating Thermostat.

Thermostat

- Thermostat is not furnished with unit
- See page 7

FEATURES

CABINET

12
- Composite unit base and top resists corrosion
- Pre-painted powder paint cabinet finish
- Tested to the International Cyclic Salt Fog/UV Exposure Standard, ASTM D5894, for excellent corrosion protection
- Louvered steel panels surround unit on all four sides
- Control box is conveniently located with all controls factory wired
- Drainage holes are provided in base section for moisture removal
- Composite base raises the unit off of the mounting surface, away from damaging moisture

13 Louvered Coil Protection
- Steel louvered panels provides complete coil protection
- Lift-off panels are easily removed to allow easy cleaning and servicing of coils
- Interlocking tabs and slots assure tight fit on cabinet

14 Refrigerant Line Connections, Electrical Inlets and Service Valves
- Braze connection suction and liquid lines
- Located on corner of unit cabinet
- Suction valve can be fully shut off, while liquid valve may be front seated to manage refrigerant charge while servicing system
- Refrigerant line connections and field wiring inlets are located in one central area of the cabinet
- See dimension drawing

Braze-Free/Press Fitting Flexibility
- Units can accommodate braze-free or press fittings for installation versatility

Optional Accessories

Stand-Off Guard-Edge Raiser Kit
- High density polyethylene feet raise unit off of mounting surface
- Available in 3 in. (76 mm) and 6 in. (152 mm) heights
- Four feet are furnished per order number

CONTROLS REQUIRED

S40 Smart Wi-Fi Thermostat

NOTE - The SL25KCV Air Conditioner can only be used with a Lennox® Communicating Thermostat.

- Recognizes and connects to all Lennox ® Communicating products to automatically configure and control the heating/cooling system
- Advanced communicating controls in specific heating and cooling units, PureAir™ S Air Purification System and Healthy Climate® HRV/ERV (Heat/Energy) Recovery Ventilators transmit information about various operating parameters to the thermostat to constantly maintain the most comfortable and efficient operating conditions possible
- Lennox Smart Room Sensors, Lennox Wireless Extenders and Lennox Smart Air Quality Monitor can be added to the system
- Smart home automation compatible with Amazon Alexa®, Google Assistant, Control4® and Building36®
- Lennox® Home App controls temperature, fan operation, set programs/schedules and set Away mode on a smartphone
- Lennox Smart Tech App allows the installer to commission the system and remotely turn the system on and off during setup or service call on a smartphone

NOTE - Please refer to the individual Product Specifications for these products for full information.

CONTROLS - ORDERING

S40 Smart Wi-Fi Thermostat	**22V24**
Lennox® Smart Room Sensor	**22V25**
Lennox® Smart Air Quality Monitor	**21P02**
Lennox® Wireless Extender	**22V26**
[1] Discharge Air Temperature Sensor	**88K38**
[2] Remote Outdoor Air Temperature Sensor (for dual-fuel and Humiditrol®)	**X2658**

[1] Optional for service diagnostics.
[2] Sensor is REQUIRED with Enhanced Dehumidification Accessory (EDA) applications.

SPECIFICATIONS — ALL REGIONS

Size			024	036	048	060
Nominal Tonnage			2	3	4	5
Sound Rating Number Range		dBA	58-68	58-70	58-73	58-74
Connections (Sweat)		Liquid line (OD) - in.	3/8	3/8	3/8	3/8
		Suction line (OD) - in.	7/8	7/8	7/8	1-1/8
Compressor Type			Variable Scroll	Variable Scroll	Variable Scroll	Variable Scroll
Refrigerant (15 ft. Line Set)	[1] R-454B charge furnished		11 lbs. 10 oz.	12 lbs. 3 oz.	11 lbs. 12 oz.	12 lbs. 4 oz.
Refrigerant (30 ft. Line Set)	[1] R-454B charge furnished		12 lbs. 3 oz.	12 lbs. 12 oz.	12 lbs. 5 oz.	12 lbs. 13 oz.
Indoor Unit Expansion Valve (TXV)			**26Z70**	**26Z70**	**26Z71**	**26Z72**
Outdoor Coil	Net face area - ft.²	Outer coil	30.9	30.9	30.9	30.9
		Inner coil	29.94	29.94	29.94	29.94
		Tube diameter - in.	5/16	5/16	5/16	5/16
		Rows	2	2	2	2
		Fins - in.	22	22	22	22
Outdoor Fan		HP	1/3	1/3	1/3	1/3
		Diameter - in.	28	28	28	28
		Blades	2	2	2	2
		Cfm - minimum speed	1540	2010	2010	1990
		maximum speed	3080	3900	4450	4450
		Rpm - minimum speed	233	322	322	313
		maximum speed	491	633	739	739
		Watts - minimum speed	14	25	25	24
		maximum speed	63	108	156	156
Shipping Data - lbs.			288	293	301	301

ELECTRICAL DATA

	Line voltage data (Volts-Phase-Hz)	208/230-1-60	208/230-1-60	208/230-1-60	208/230-1-60
	[2] Maximum overcurrent protection (MOCP) amps	20	35	50	45
	[3] Minimum circuit ampacity (MCA)	14.4	21.8	29.2	28.6
Compressor	Rated load amps	9.4	15.4	21.3	20.8
Fan Motor	Full load amps	2.6	2.6	2.6	2.6

OPTIONAL ACCESSORIES - ORDER SEPARATELY

[4] Freezestat	3/8 in.	**93G35**	•	•	•	•
Refrigerant Line Sets Liquid x Suction OD | Insulation Thickness | Length	3/8 x 7/8 | 3/8 | 30 ft.	**89J60**	•	•	•	
	3/8 x 7/8 | 3/8 | 50 ft.	**89J62**				
	3/8 x 1-1/8 | 3/8 | 50 ft.	**73P91**				•
Stand-Off Guard-Edge Raiser Kit	3 in. (76 mm)	**27X34**	•	•	•	•
	6 in. (152 mm)	**27X35**	•	•	•	•

NOTE - Extremes of operating range are plus 10% and minus 5% of line voltage.

[1] Refrigerant charge sufficient for the line set length listed in parenthesis. For longer line set requirements see the Installation Instructions or unit Charging Label for information about line set length and additional refrigerant charge required.

[2] HACR type breaker or fuse.

[3] Refer to National or Canadian Electrical Code manual to determine wire, fuse and disconnect size requirements.

[4] Freezestat is recommended for low ambient operation.

EXPANDED SOUND DATA

Size	Octave Band Sound Power Levels dBA, re 10^{-12} Watts Center Frequency - HZ							[1] Sound Rating Number (dBA)	[2] Estimated Sound Pressure Level at Distance From Unit (dBA at distance in ft.)				
	125	250	500	1000	2000	4000	8000		3	5	10	15	50
024 Min.	49	51.5	48	47	45.5	44	50.5	58	51	46	40	37	26
024 Max.	51	58.5	63	63.5	58.5	58	55.5	68	61	56	50	47	36
036 Min.	49	52	51	51	48	48	46.5	58	51	46	40	37	26
036 Max.	54.5	60	67	64	60	57	51.5	70	63	58	52	49	38
048 Min.	49	51.5	51	51	45.5	43	39	58	51	46	40	37	26
048 Max.	54.5	64.5	68.5	66	63	60	54	73	66	61	55	52	41
060 Min.	48.5	51.5	47.5	49	45	47.5	42.5	58	51	46	40	37	26
060 Max.	53.5	63.5	70	70.5	64.5	60.5	56	74	67	62	56	53	42

NOTE - The octave sound power data does not include tonal correction.

[1] Tested according to AHRI Standard 270 test conditions. Sound rating Number is the overall A-Weighted Sound Power Level, (LWA), dB (100 Hz to 10,000 Hz).

[2] Estimated sound pressure level at distance based on AHRI Standard 275 method for equipment located on the ground, roof, or on side of building wall with no adjacent reflective surface within 9.8 feet. Sound pressure levels will increase based on changes to assumptions. For other applications, refer to AHRI Standard 275.

INSTALLATION CLEARANCES

NOTES:

- Service Clearance – 30 in. (762 mm) on one of the sides adjacent to the Control Box.
- One of other three sides must be 36 in. (914 mm).
- One of the two remaining sides may be 12 in. (305 mm).
- The remaining side may be 6 in. (152 mm).
- 48 in. (1219 mm) clearance required on top of unit
- 24 in. (610 mm) required between two units

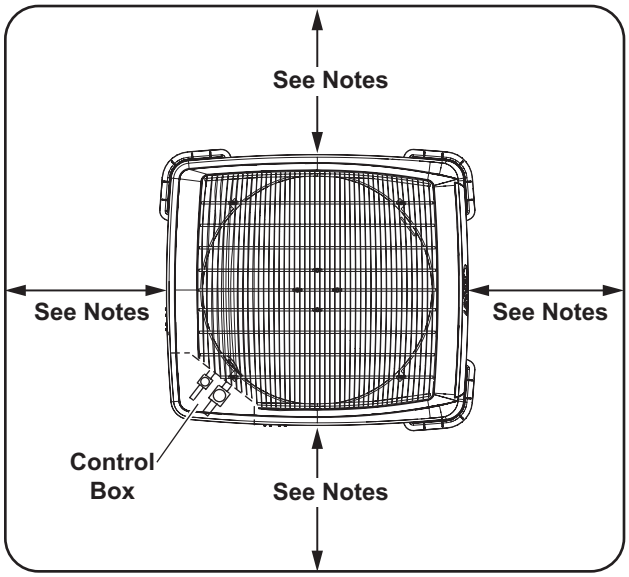

FIELD WIRING

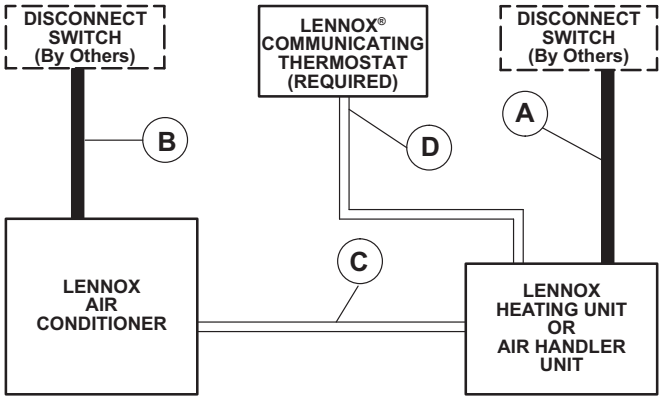

A - Two Wire Power

B - Two Wire Power (see Electrical Data)

C - Lennox® Communicating Thermostat:
- Four Wire, 18AWG (RSBus)

D - Lennox® Communicating Thermostat:
- Four Wire, 18 to 22AWG (RSGBus) standard thermostat cable for terminals (R, C, I+, I-).

NOTE - All wiring must conform to NEC or CEC and local electrical codes.

NOTE - Refer to the S40 Installation Instructions for optional wiring connections for communicating thermostats.

NOTE - Field wiring is not furnished.

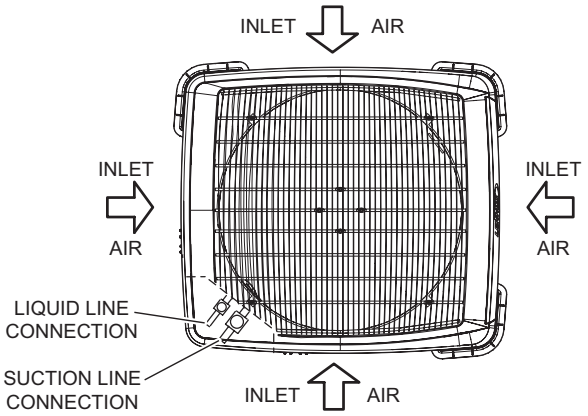

TOP VIEW

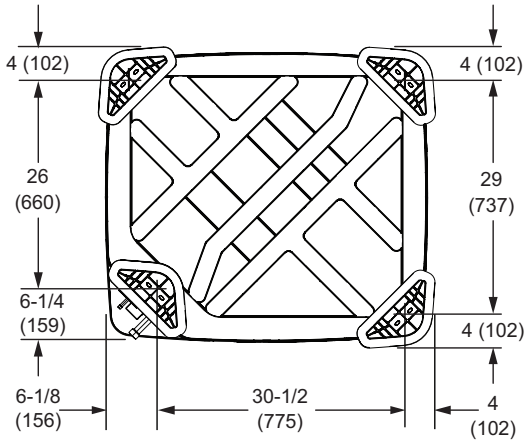

BOTTOM VIEW BASE SECTION
(With Optional Standoff Kit)

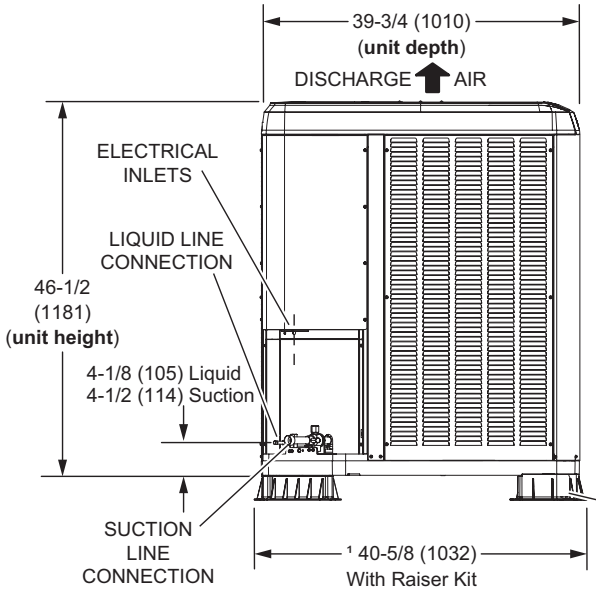

SIDE VIEW

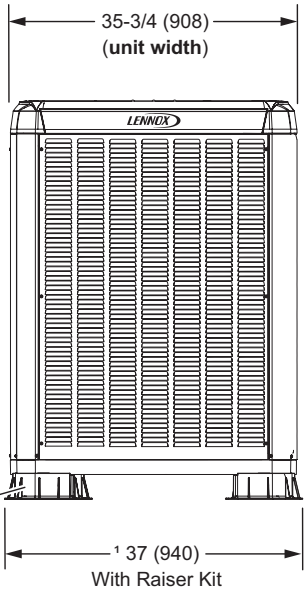

FRONT VIEW

[1] OPTIONAL STAND-OFF GUARD-EDGE RAISER KIT (4) (Field Installed)

[1] Adds 3 in. (76 mm) or 6 in. (152 mm) to unit height
Adds 1-1/4 in. (32 mm) to unit width and depth

TXV USAGE

All Lennox coils and air handlers are shipped with a factory installed TXV. In most cases, no substitution is needed.
If a different size TXV is required, it will be listed in the "TXV SUBSTITUTION" table by size. The correct TXV must be ordered separately and field installed.

Size	Order Number
024	**26Z70**
036	**26Z70**
048	**26Z71**
060	**26Z72**

AHRI STANDARD 210-240-2023

Standard Ratings relating to cooling or heating capacities shall be net values, including the effects of circulating-fan heat, but not including supplementary electric heat. Power input used for calculating efficiency shall be the Total Power.

Standard Ratings of units which do not have indoor air-circulating fans furnished as part of the model, i.e., Coil-only System, shall be established by subtracting from the total cooling capacity 1,505 Btu/h per 1,000 SCFM, and by adding the same amount to the heating capacity for non-mobile-home, non-Space Constrained units. Total Power for both heating and cooling shall be increased by 441 W per 1,000 SCFM of indoor air circulated.

TXV SUBSTITUTION - R-454B

A general guide for replacing the factory installed R-454B TXV if the indoor unit (coil/air handler) is larger or smaller than the outdoor unit.

Outdoor Unit		Indoor Unit		Indoor TXV Furnished	Indoor TXV Replacement
Size	Tons	Size	Tons		
024	2	42	3.5	**26Z71**	**26Z70**
024	2	48	4	**26Z71**	**26Z70**
024	2	49	4	**26Z71**	**26Z70**
024	2	50/60	4/5	**26Z71**	**26Z70**
024	2	51/61	4/5	**26Z71**	**26Z70**
024	2	60	5	**26Z72**	**26Z70**
036	3	42	3.5	**26Z71**	**26Z70**
036	3	48	4	**26Z71**	**26Z70**
036	3	49	4	**26Z71**	**26Z70**
036	3	50/60	4/5	**26Z71**	**26Z70**
036	3	51/61	4/5	**26Z71**	**26Z70**
036	3	60	5	**26Z72**	**26Z70**
048	4	30/36	2.5/3	**26Z70**	**26Z71**
048	4	36	3	**26Z70**	**26Z71**
048	4	60	5	**26Z72**	**26Z71**
060	5	50/60	4/5	**26Z71**	**26Z72**
060	5	51/61	4/5	**26Z71**	**26Z72**

TXV Ranges:

26Z70 - 1.5 to 3 ton systems - Use on 3 ton (036) and lower systems.

26Z71 - 3.5-4 ton systems - Use on 4 ton (048) and down to 3.5 ton (042) systems.

26Z72 - 5 ton systems - Use on 5 ton (060) systems only.

REVISIONS

Sections	Description of Change
Approvals	Products are now AHRI Standard 1380 Demand Response compatible.

Visit us at www.Lennox.com
For the latest technical information, www.LennoxPros.com
Contact us at 1-800-9-LENNOX

NOTE - Due to Lennox' ongoing commitment to quality, Specifications, Ratings and Dimensions subject to change without notice and without incurring liability.
Improper installation, adjustment, alteration, service or maintenance can cause property damage or personal injury.
Installation and service must be performed by a qualified installer and servicing agency.

©2026 Lennox Industries, Inc.