SL297UHNV

DAVE LENNOX *SIGNATURE*® COLLECTION

Upflow / Horizontal - Two-Stage Heat - Variable Speed Blower - 60 Hz

RESIDENTIAL PRODUCT SPECIFICATIONS

Bulletin No. 210811
July 2024
Supersedes all previous versions

S40 Smart Wi-Fi
Communicating Thermostat
(Required - Not Furnished)

AFUE - 97.5%
Meets NOx Limit of 14 ng/J
Input - 40,000 to 80,000 Btuh
Nominal Add-on Cooling - 2 to 5 Tons

MODEL NUMBER IDENTIFICATION

SL 2 97 UH 060 N V 36 B

Unit Type
SL = Dave Lennox *Signature*® Collection

Stages
2 = Two-Stage

AFUE
97 = 97%

Configuration
UH = Upflow/Horizontal

Nominal Gas Heat Input
040 = 40,000 Btuh
060 = 60,000 Btuh
080 = 80,000 Btuh

Ultra-Low NOx
N = Units meet California Nitrogen Oxides Standard (14ng/J)

Blower
V = Variable Speed Blower Motor

Nominal Add-On Cooling Capacity
36 = 3 tons
48 = 4 tons
60 = 5 tons

[1] **Cabinet Width**
B = 17-1/2 in.
C = 21 in.

[1] Indoor coils with the same letter designation physically matches the furnace.

FEATURE HIGHLIGHTS

1. Heat Exchanger Assembly
2. Secondary Heat Exchanger
3. SureLight® Hot Surface Ignitor
4. Modulating Gas Control Valve
5. Variable-Speed Combustion Air Inducer
6. Thermal Switch
7. SureLight® Integrated Furnace Control
8. Variable Speed Direct Drive Blower
9. Insulated Cabinet
10. Safety Interlock Switch
11. Gas Piping And Electrical Inlets

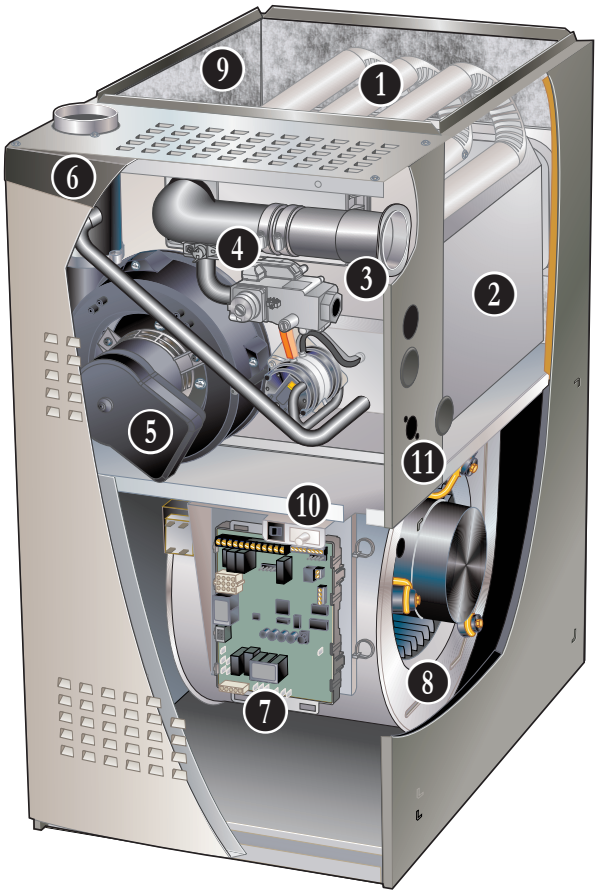

NOTE - SL297UHNV 40K INPUT FURNACES ARE NATURAL GAS ONLY!
NOTE - SL297UHNV FURNACES CANNOT BE TWINNED!
NOTE - NOT AVAILABLE IN ALL AREAS!
CONTACT YOUR NEAREST LENNOX SALES OFFICE FOR DETAILS.

CONTENTS

Blower Data . . . 22
Approvals And Warranty . . . 3
Dimensions . . . 15
- Furnace/Coil Combined Dimensions . . . 21
- Optional Accessories . . . 17
- Optional Accessories - Venting. . . . 18
- Unit - Horizontal Position . . . 16
- Unit - Upflow Position . . . 15
Features . . . 3
Gas Heat Accessories . . . 10
High Altitude Operation. . . . 11
Installation Clearances . . . 11
Model Number Identification. . . . 1
Optional Accessories - Order Separately . . . 10
Specifications . . . 9
Vent Lengths . . . 12
Vent Lengths (Exhaust) - Ventilated Attic Or Crawlspace Intake Air - Feet . . . 14
Vent Lengths - Uninsulated Exhaust Pipe In Unconditioned Space - Feet . . . 11

APPROVALS AND WARRANTY

APPROVALS

- AHRI Certified
- CSA International Certified
- Tested and rated according to US DOE test procedures and FTC labeling regulations
- Approved by the California Energy Commission and meets California Nitrogen Oxides Standard (NOx) limits of 14 ng/J
- Units are approved for installations from 0 - 4500 ft.
- ENERGY STAR® certified units are designed to use less energy, help save money on utility bills, and help protect the environment
- ISO 9001 Registered Manufacturing Quality System
- Blower data from unit tests conducted in Lennox Laboratory air test chamber

NOTE - This furnace has not been CSA International design certified for installation in mobile homes, recreational vehicles, or outdoors.

California Only

- These furnaces **meet** the South Coast Air Quality Management District (SCAQMD) Rule 1111 and San Joaquin Valley Air Pollution Control District (SJVAPCD) Rule 4905 NOx emission limit (14 ng/J) and can be installed within the SCAQMD, SJVAPCD and Bay area

WARRANTY

- Heat Exchanger:
  - Limited lifetime (twenty year transferable) in residential applications
  - Limited ten years in non-residential applications
- All other covered components:
  - Limited ten years in residential installations
  - Limited one year in non-residential installations

NOTE - Refer to Lennox® Basic Limited Warranty at www.Lennox.com for additional details.

FEATURES

APPLICATIONS

- Input capacities of 40,000, 60,000 and 80,000 Btuh
- Energy efficiency (AFUE) - 97.5%
- Upflow, horizontal-left or horizontal-right applications
- Utility room, alcove, closet, crawl space, basement or attic installation
- Lennox add-on indoor coils, high-efficiency air cleaners and humidifiers can easily be added to furnace
- Shipped factory assembled with all controls installed and wired
- Removable bottom seal panel shipped in place for side return air is easily removed for bottom/end return air applications
- Each unit factory test operated to ensure proper operation

Zoning Applications

- May be used with the Lennox Lennox® Smart Zoning System with the Lennox® Communicating Thermostat
- Lennox® Smart Zoning System provides direct feedback to the furnace, controlling both airflow and heat output to match the comfort requirements for up to four zones

HEATING SYSTEM

1 Heat Exchanger Assembly

- Heavy gauge aluminized steel heat exchanger
- Tubular type design
- Designed for normal expansion and contraction with maximum efficiency and minimum resistance to air flow
- 2 Secondary heat exchanger condenser coil constructed of aluminum fins fitted to stainless steel tubes
- Coil is factory tested for leaks
- Condensate drain header box assembly located on front of coil
- Laboratory life cycle tested in excess of industry standards
- Compact size permits low overall design of furnace cabinet

Header Box

- Header box on end of condenser coil collects flue condensate for disposal through condensate drains
- Drains are located on each side of the cabinet for easy field installation of condensate drain trap
- Only one drain is used, the other drain is sealed
- Condensate drain trap is included for field installation

HEATING SYSTEM (continued)

Flue Condensate Trap Assembly

- Field installed outside the conditioned air stream
- Assembly can be mounted on either side of cabinet in upflow applications
- Assembly is mounted below the cabinet in horizontal applications
- Can also be mounted remotely (up to 5 ft. away) from unit
- See Installation Instructions
- 90° street elbow furnished for ease of drain trap installation
- Drain connection can be made with field provided PVC pipe, PVC coupling, or vinyl tubing with hose clamp
- Drain cap on trap allows easy cleaning and winterizing

3 SureLight® Hot Surface Ignitor

- Tough, reliable, long-life, trouble-free performance
- Silicon nitride ignitor
- Cemented to steatite block for protection against current leakage
- Ignition leads are constructed of nickel plated copper and are enclosed in high temperature Teflon® insulation for dependable operation

4 Modulating Gas Control Valve

- 24 volt redundant combination modulating gas control valve combines manual shut off switch (On-Off), automatic electric valve (dual) and gas pressure regulation into a compact combination control

5 Variable-Speed Combustion Air Inducer

- Permanent split capacitor (PSC), heavy duty blower prepurges heat exchanger and safely vents flue products
- Dual pressure switches (low fire/high fire) prove blower operation before allowing gas valve to open
- Operates only during heating cycle

6 Thermal Switch

- Factory installed on air/fuel intake assembly
- Provides protection from abnormal operating conditions
- Automatic reset

Limit Control

- Primary limit is accurately located on vestibule panel
- Automatic reset

Optional Accessories

Natural Gas to LPG/Propane Conversion Kit (60K and 80K Input Furnaces Only)

- Required for field changeover from natural gas to LPG/Propane
- Includes gas and air orifices

Muffler (US Only)

- Significantly reduces outdoor operating sound levels
- Installed vertically in the exhaust piping
- See Optional Accessory Dimension Drawing

DIRECT VENT SEALED COMBUSTION SYSTEM

- Furnace features a “sealed combustion” system and can only be installed in Direct Vent applications
- In Direct Vent applications, combustion air is supplied from outdoors and flue gases are discharged outdoors

NOTE - Lennox has approved the use of DuraVent® PolyPro® and Centrotherm InnoFlue® manufactured vent pipe and terminations as an alternative to PVC vent pipe. Must be ordered separately.
Tested and listed to the ULC S636 standard in Canada

NOTE - The polypropylene venting system must follow the uninsulated and unconditioned space vent lengths listed in the table on 13. Refer to the Installation Instructions for additional details.

Optional Accessories

Flue Coupling

- Assists with exhaust flue piping connection and servicing
- Includes flexible one 2-inch rubber coupling and two adjustable bands
- Approved for all Lennox 90% furnaces

Vent Termination Kits

- Facilitates installation of combustion air intake pipe and flue exhaust pipe
- Refer to venting table in this bulletin to determine pipe size needed and proper termination kit required
- See Optional Accessories table and dimension drawings

Concentric Termination Kit

- 2 or 3 inch kit contains concentric termination assembly, reducer bushing and 45° elbow
- 2 inch kit for -070 model contains an outdoor exhaust accelerator
- Kit requires single hole penetration of roof or wall for installation
- Roof Termination Flashing Kit available for use 2 inch Kits
- CSA certified

Flush-Mount Termination Kit

- Kit contains flush-mount termination, accelerator, mounting template and hardware
- Kit may be used with 2, 2-1/2 or 3 inch pipe

Wall Assembly Termination Kits

Close Couple (US Only)

- 2 or 3 inch kit consists of close-couple, side-by-side PVC piping with galvanized steel wall cover plate for
- Seals and isolates intake and exhaust piping penetration of wall
- Piping spacing and length is sized for proper wall installations
- CSA certified

Close Couple WTK (Canada Only)

- 2 or 3 inch kit contains one insulated faceplate, one insulated exhaust pipe, elbow and fittings

DIRECT VENT SEALED COMBUSTION SYSTEM (continued)

NOTE - Maintain a maximum of 6 inches between the inlet and outlet openings in the installation of the pipes.

Roof Termination Flashing Kit

- For vertical venting through a roof
- 2 or 3 inch kit contains two neoprene rubber roof flashings
- Vent pipe and insulation not furnished
- Flashing Kit can also be used with Concentric Vent Termination Kits used in vertical venting rooftop applications

CONTROLS

7 S ureLight® Integrated Furnace Control (Lennox® Communicating)

- Advanced control communicates information about various operating parameters in the furnace to the optional Lennox® Communicating Thermostat to constantly maintain the highest level of comfort and performance available
- Auto Configuration - On start-up the control automatically sends a description of the unit to the optional Lennox® Communicating Thermostat to automatically configure the number of stages and features available
- Terminals for connecting a conventional heating/cooling thermostat are also provided on the control
- Control also features Innovative AirFlex™ technology which allows custom blower settings based on the application

NOTE - For optimal performance, the use of a high-quality, digital two-stage thermostat with adjustable settings for first stage/second stage, on/off differentials and adjustable stage timers is recommended.

Furnace Input Staging Options

Thermostat Type	Input Staging Available
Lennox® Communicating Thermostat	Two-Stage (65 and 100%)
Two-Stage (Conventional)	
Single-Stage (Conventional)	

- Safety Controls - Flame sensor utilizes flame rectification for safe and reliable operation
- Should flame fail to ignite, control will initiate 4 re-attempts at ignition before locking out unit operation for 60 minutes
- Watchguard type circuit automatically resets ignition control after one hour of continuous thermostat demand after unit lockout, eliminating nuisance calls for service
- Display LED - Seven segment LED displays alpha-numeric information related to diagnostics as well as system operation and status
- Diagnostic codes are held in non-volatile memory, immune from power interruptions
- Holds up to ten diagnostic codes in order of occurrence for recall on demand
- Port on blower door allows for easy viewing

DIP Switch Settings

- Select Thermostat Used - Single-Stage or Two-Stage
- Two selectable second stage recognition times (7 and 12 minutes) are available on the control when the furnace is used with a single-stage thermostat
- When used with a two-stage thermostat, furnace will only initiate second stage operation with a second stage thermostat demand
- Heating Speeds - A combination of DIP switch settings allow the following motor speed selection settings within the heating speed selected for fine tuning air volume:
  - Factory default
  - 6%, 12%, 18% or 24% increase
  - 6%, 12% or 18% decrease
- See Blower Performance tables
- Cooling Speeds - A combination of DIP switch settings allow the following motor speed selection settings within the cooling speed selected for fine tuning air volume:
  - Factory default
  - 10% increase
  - 10% decrease
- See Blower Performance tables
- Blower Speed Ramping (Cooling Mode) - DIP switch settings allow one of four blower speed profiles during cooling operation.
  - Profile A (factory setting) - Motor runs at 50% for 30 seconds, then at 82% for 7-1/2 minutes, then at 100% (if needed) until demand is satisfied.
    Once demand is met, motor runs at 50% for 30 seconds, then ramps down to stop
  - Profile B - Motor runs at 82% for 7-1/2 minutes and then at 100% (if needed) until demand is satisfied. Once demand is met, motor ramps down to stop
  - Profile C - Motor runs at 100% until demand is satisfied. Once demand is met, motor runs at 100% for 60 seconds, then ramps down to stop
  - Profile D - Motor runs at 100% until demand is satisfied. Once demand is met, motor ramps down to stop

FEATURES

CONTROLS (continued)

- Dehumidification (Active or Humiditrol® Option) - A jumper on the control must be clipped to enable active dehumidification and/or operation with a Humiditrol® Whole-Home Dehumidification System
- A humidity controlling thermostat or device is also required
- During a call for cooling, air volume is automatically reduced, forcing humidity removal by the air conditioner or heat pump system (single stage units or two-stage units running at 2nd stage)
- After the humidity has reached the desired set-point the cooling air volume returns to its designed rate
- A dehumidification signal from the thermostat reduces the cooling cfm to 70% of the requested cooling cfm
- Dual-Fuel Operation - A jumper on the control must be clipped to enable operation with a single or two-stage heat pump
- The indoor blower is started without delay when a call for heat is received
- Two-Stage Compressor Operation - A jumper on the control must be clipped to enable operation with a two-stage compressor
- The cooling blower speeds for first and second stage cooling will be dictated by the applicable DIP switch settings
- Lennox System Operations Monitor Connection - Monitors outdoor unit operation (communicating mode)
- Blower On/Off Time (Heating) - Blower on time is fixed at 30 seconds, blower off time is adjustable from 60, 90, 120 and 180 seconds (factory setting - 90 seconds)
- Blower On/Off Time (Cooling) - For air-conditioning applications, blower on time is 2 seconds following thermostat demand for cooling
- See "Blower Speed Ramping (Cooling Mode)" profiles for various blower off details
- Controls evaporator humidity by controlling blower and compressor speed on two-stage outdoor units when used with the Lennox® Communicating Thermostat
- Continuous Blower Speed - Adjustable continuous blower speed is a percentage of the high cooling speed selection
- Four selectable options (via DIP switch settings) of 28%, 38% (default setting), 70% and 100%
- Accessory Terminal - One accessory terminal furnished for additional power supply requirements for 120 volt (less than 1 amp) powered IAQ accessories
- One un-powered pair of contacts are provided for humidifier connections and may be connected to 24V or 120V
- Control is factory installed in the unit control box

24 Volt Transformer (40VA)

- Furnished and factory installed on outside of control box
- Circuit breaker (furnished) is wired in series

Field Wiring Make-Up Box

- Furnished for line voltage wiring
- Factory installed internally on left side of furnace
- Box may be installed internally on right side of furnace

Optional Accessories

S40 Smart Wi-Fi Thermostat (part of the Lennox® Residential Communicating Control System)

- Recognizes and connects to all Lennox® Communicating products to automatically configure and control the heating/cooling system (based on user-specified settings) for the highest level of comfort, performance and efficiency

- Recognizes model and serial number information for Lennox® Communicating products to simplify system setup
- Lennox Smart Room Sensors, Lennox Wireless Extenders and Lennox Smart Air Quality Monitor can be added to the system
- Smart home automation compatible with Amazon Alexa®, Google Assistant, Control4® and Building36®
- Sends service alerts and reminders
- Lennox Smart Thermostat App features Wi-Fi remote temperature monitoring and adjustment through a home wireless network apps for smartphones or tablets
- Lennox Smart Technician App allows installer to manage systems in the home
- Service Dashboard features online real-time monitoring and advanced diagnostics of installed Lennox® Communicating systems
- Simple easy-to-use touchscreen allows complete system configuration
- Scheduled maintenance alerts, system warnings and troubleshooting are also displayed on thermostat screen
- Easy to read 7 inch high definition color display (measured diagonally)
- Conventional outdoor units (not Lennox® Communicating) can easily be added and controlled by the S40 Thermostat
- Installer setup screens allow quick and simple system configuration without a manual, Installer can also run tests on complete system or individual components for easy maintenance and troubleshooting
- Serial communications bus (RSBus), with less wiring than a conventional heating/cooling system, allows system communication
- Uses standard 4-wire unshielded thermostat wiring
- High Definition Color Display with Subbase and wallplate furnished for easy installation

NOTE - See the Lennox® S40 Thermostat Product Specifications bulletin in the Controls section for more information.

CONTROLS (continued)

Remote Outdoor Temperature Sensor
- Allows thermostat to display outdoor temperature
- Automatically detected when connected to thermostat

NOTE - Sensor is required for the Enhanced Dehumidification Accessory (EDA).

NOTE - Sensor is furnished as standard with Lennox® Communicating outdoor units, optional for conventional units.

Thermostat
- Thermostat is not furnished with unit
- Lennox Price Book for selection

Transformer (75VA)
- Recommended when furnace is used with zoning or defrost thermostats and other 24V accessories requiring a higher VA rating
- Circuit breaker (furnished) is wired in series
- Replaces the standard 40VA transformer

BLOWER

8 Variable Speed Direct Drive Blower
- Each blower assembly statically and dynamically balanced
- Blower assembly easily removed for servicing

Variable Speed Blower Motor
- Variable speed motor maintains specified air volume from 0 though 0.8 in. w.g. (heating) and 0 through 1.0 in. w.g. (Cooling) static range
- Variable speed operation is achieved by the use of an ECM (Electronically Commutated Motor) motor
- Motor is controlled by furnace control
- Change in blower speed is easily accomplished by simple DIP switch change on furnace control
- See Blower Data tables
- Motor is resiliently mounted

NOTE - When furnaces are used with the Lennox® Smart Zoning System and the Lennox Communicating Thermostat, the blower motor operates from predetermined minimum - maximum air volumes to satisfy zone requirements.

CABINET

- Low-profile, narrow width allows easy installation
- Heavy-gauge, cold rolled steel construction
- Pre-painted cabinet finish
- Flanges provided on supply air opening for ease of plenum connection or alignment with indoor coil
- 9 Insulated with foil faced insulation on sides and back of heating compartment and mat faced insulation in blower compartment
- Sealed blower compartment
- Inner blower compartment access panel seals blower compartment from air leakage
- Cabinet door can be removed without any tools
- Complete service access
- 10 Safety interlock switch automatically shuts off power to unit when blower compartment access door is removed
- 11 Gas piping inlet is provided on right side of cabinet
- Electrical inlets are provided on both sides of cabinet

Bottom/Side Return Air Entry
- Upflow/horizontal with bottom return air entry:
  - Remove furnished bottom seal panel from cabinet
- Upflow only with side return-air entry:
  - Corners are marked on either side of cabinet for return air cut-out
- See dimension drawings

NOTE - 60C size units that require air volumes over 1800 cfm must have one of the following:
- Single side return air and Optional Return Air Base with transition that must accommodate required 20 x 25 x 1 inch air filter to maintain proper velocity
- Bottom return air
- Return air from both sides
- Bottom and one side return air
- See Blower Performance Tables for additional information

Coil Match-Up
- All furnaces exactly match Lennox cased upflow indoor coils and horizontal indoor coils with same letter designation (A, B, C, D) in model number
- No adaptor required
- Engaging holes furnished on cabinet for alignment
- Lennox uncased coils match furnaces without any overhang but require an optional adaptor base or field fabricated transition to match furnace opening
- See coil bulletin for additional information

Low Leakage Cabinet
- All models have less than 2% air leakage
- Meets ANSI/ASHRAE Standard 193-2010 “Method of Test for Determining the Air Tightness of HVAC Equipment”

CABINET (continued)

Optional Accessories

Condensate Drain Heat Cable Kits
- Self-limiting wattage heat cable prevents condensate drain from freezing in unconditioned areas
- Available in 6 or 24 ft. lengths

Horizontal Suspension Kit
- Provides suspension of unit and indoor coil in horizontal applications
- Allows complete service access
- Consists of corner mounted hanging brackets with vibration isolators, return air end support rail and hardware for assembly
- Metal hanging straps must be field provided

Crawl Space Vent Drain Kit
- Allows venting through a crawl space for upflow and horizontal applications
- Kit for Canada is certified to ULC S636
- Includes 2 or 3 inch sanitary tee, 2 inch PVC assembly, PVC boot and clamp

Return Air Base
NOTE - On furnaces with side return air and condensate trap on the same side of the cabinet, a field fabricated transition or Return Air Base is required when using an IAQ product higher than 14-3/16 inches installed next to the unit and serviced from the front. IAQ products higher than 20 inches require a field fabricated transition.

NOTE - Must be used for 60C size models with air volumes over 1800 cfm in upflow applications when only one side return is required.
- Cabinet is shipped flat for easy field assembly
- Pre-painted steel to match the furnace
- See Dimension Drawing

High Performance Economizer
(Commercial Applications Only)
- Designed for applications requiring outdoor air to be utilized in a commercial HVAC system
- Allows the entry of fresh outdoor air for free cooling, reducing the requirement for mechanical cooling
- Heavy gauge galvanized steel cabinet lined with thick fiberglass insulation
- Mixed air sensor, outdoor air sensor and 24VAC transformer furnished
- Approved for California Title 24 building standards. ASHRAE 90.1-2010 compliant
- See separate Product Specifications bulletin for additional information and available control and sensor options

NOTE - Economizer is not Lennox® communicating compatible.

FILTER (not furnished)

- Filter and provisions for external mounting must be field provided

Optional Accessories

Air Filter and Rack Kit for Horizontal Return Air (End) Applications
- Washable or vacuum cleanable polyurethane frame type filter and external end return air rack
- Rack has filter door for servicing
- Flanges on rack for duct connection
- Field installed
- See dimension drawing

Air Filter and Rack Kit for Upflow Side Return Air
NOTE - Not for use with Return Air Base
- Washable or vacuum cleanable polyurethane frame type filter and external side return air rack available for field installation
- Available in single and ten pack kits
- Rack has filter door for servicing
- Flanges on rack for duct connection
- Field installs on either side of unit cabinet
- See dimension drawing

REFRIGERATION DETECTION SYSTEM (RDS)

Optional Accessories

Refrigerant Detection System (RDS) Coil Sensor Kit

- Complies with UL 60335-2-40 approved standard
- Required for field installation for all systems using R-454B refrigerant if sensor is not furnished with coil
- Consists of Refrigerant Detection System (RDS) sensor, lineset sleeves, mounting brackets and A2L labeling
- Sensor ensures safe operation for systems equipped with R-454B refrigerant
- Sensor will detect anu R-454B refrigerant

Refrigerant Detection System (RDS) Blower Control Board

Communicating Blower Control Board (Universal)

- Communicating Blower Control Board and Sensor can be used universally with any Lennox® communicating furnace or any non-communicating 24 volt furnace

Non-Communicating Blower Control Board

- Non-Communicating Blower Control Board and Sensor can be used with any non-communicating 24 volt furnace

Standard Features

- Complies with UL 60335-2-40 approved standard
- Required for all systems using R-454B refrigerant
- Connects to the RDS sensor furnished with the RDS Coil Sensor Kit
- Supports up to two RDS Sensors (factory setting)
- Used as an interface between indoor unit and thermostat to control system
- Ensures safe operation for systems equipped with R-454B refrigerant
- If R-454B refrigerant is detected, the refrigerant detection system will stop compressor and/or heating operating and operate the blower to reduce concentrations in the conditioned space
- Once safe levels are reached the HVAC system will resume normal operation
- Multi-color LED for system status and as an aid in troubleshooting
  - Flashing LED codes for system status (Green/Blue) and diagnosing Sensor errors (Red)
- Alarm relay can trigger an external alarm if R-454B refrigerant is detected
- Zone relay opens all zone dampers (if part of a zoning system) if R-454B refrigerant is detected
- Power is disabled to non-communicating thermostats to prevent demand if R-454B refrigerant is detected
- On system start-up blower will run for five minutes and any thermostat demands are disabled
- Dimensions (H x W x D): 7-7/16 x 7-7/16 x 2-1/2 (189 x 189 x 127 mm)

NOTE - See Refrigerant Detection System (RDS) Components Table on page 12.

See the CK40 Indoor Coil Product Specifications bulletins for more information.

Refer to the Installation Instructions for additional information.

SPECIFICATIONS

Gas Heating Performance		Model No.	**SL297UH040NV36B**	**SL297UH060NV36B**
		[1] AFUE	97.5%	97.5%
	High Fire	Input - Btuh	40,000	60,000
		Output - Btuh	39,000	58,000
		Temperature rise range - °F	30-60	50-80/25-55
		Gas Manifold Pressure (in. w.g.) Nat. Gas / LPG/Propane	3.5 / N/A	3.5 / 3.6
	Low Fire	Input - Btuh	26,000	39,000
		Output - Btuh	25,000	38,000
		Temperature rise range - °F	20 - 50	25 - 55
		Gas Manifold Pressure (in. w.g.) Nat. Gas / LPG/Propane	1.5	1.5 / 1.7
High static - in. w.g.		Heating	0.8	0.8
		Cooling	1.0	1.0
Connections in.		Intake / Exhaust Pipe (PVC)	2 / 2	2 / 2
		Gas pipe size IPS	1/2	1/2
		Condensate Drain Trap (PVC pipe) - i.d.	3/4	3/4
		with furnished 90° street elbow	3/4 slip x 3/4 Mipt	3/4 slip x 3/4 Mipt
		with field supplied (PVC coupling) - o.d.	3/4 slip x 3/4 MPT	3/4 slip x 3/4 MPT
Indoor Blower		Wheel nominal diameter x width - in.	10 x 9	10 x 9
		Motor output - hp	1/2	1/2
		Tons of add-on cooling	2 - 3	2 - 3
		Air Volume Range - cfm	440-1370	475-1380
Electrical Data		Voltage	120 volts - 60 hertz - 1 phase	
		Blower motor full load amps	7.7	7.7
		Maximum overcurrent protection	15	15
Shipping Data		lbs. - 1 package	125	130

NOTE - Filters and provisions for mounting are not furnished and must be field provided.

[1] Annual Fuel Utilization Efficiency based on DOE test procedures and according to FTC labeling regulations. Isolated combustion system rating for non-weatherized furnaces.

SPECIFICATIONS

Gas Heating Performance		Model No.	**SL297UH080NV48C**	**SL297UH080NV60C**
		[1] AFUE	97.5%	97.5%
	High Fire	Input - Btuh	80,000	80,000
		Output - Btuh	78,000	78,000
		Temperature rise range - °F	45-75	40-70
		Gas Manifold Pressure (in. w.g.) Nat. Gas / LPG/Propane	3.5 / 3.6	3.5 / 3.6
	Low Fire	Input - Btuh	52,000	52,000
		Output - Btuh	51,000	51,000
		Temperature rise range - °F	30 - 60	25 - 55
		Gas Manifold Pressure (in. w.g.) Nat. Gas / LPG/Propane	1.5 / 1.7	1.5 / 1.7
High static - in. w.g.		Heating	0.8	0.8
		Cooling	1.0	1.0
Connections in.		Intake / Exhaust Pipe (PVC)	2 / 2	2 / 2
		Gas pipe size IPS	1/2	1/2
		Condensate Drain Trap (PVC pipe) - i.d.	3/4	3/4
		with furnished 90° street elbow	3/4 slip x 3/4 Mipt	3/4 slip x 3/4 Mipt
		with field supplied (PVC coupling) - o.d.	3/4 slip x 3/4 MPT	3/4 slip x 3/4 MPT
Indoor Blower		Wheel nominal diameter x width - in.	11 x 11	11 x 11
		Motor output - hp	3/4	1
		Tons of add-on cooling	2.5 - 4	3 - 5
		Air Volume Range - cfm	620-1730	870-2285
Electrical Data		Voltage	120 volts - 60 hertz - 1 phase	
		Blower motor full load amps	10.1	12.8
		Maximum overcurrent protection	15	15
Shipping Data		lbs. - 1 package	154	156

NOTE - Filters and provisions for mounting are not furnished and must be field provided.

[1] Annual Fuel Utilization Efficiency based on DOE test procedures and according to FTC labeling regulations. Isolated combustion system rating for non-weatherized furnaces.

OPTIONAL ACCESSORIES - ORDER SEPARATELY

NOTE - FURNACES CANNOT BE TWINNED!

			"B" Width Models	"C" Width Models
CABINET ACCESSORIES				
Horizontal Suspension Kit - Horizontal only			**51W10**	**51W10**
Return Air Base - Upflow only			**50W98**	**50W99**
High Performance Economizer (Commercial Only)			**10U53**	**10U53**
CONDENSATE DRAIN KITS				
Condensate Drain Heat Cable		6 ft.	**26K68**	**26K68**
		24 ft.	**26K69**	**26K69**
Crawl Space Vent Drain Kit		US	**51W18**	**51W18**
		Canada	**15Z70**	**15Z70**
CONTROLS				
S40 Smart Wi-Fi Thermostat			**22V24**	**22V24**
[1] Remote Outdoor Air Temperature Sensor			**X2658**	**X2658**
[2] Discharge Air Temperature Sensor			**88K38**	**88K38**
Transformer (75VA)			**27J32**	**27J32**
FILTER KITS				
[3] Air Filter and Rack Kit	Horizontal (end)		**87L96**	**87L97**
		Size of filter - in.	18 x 25 x 1	20 x 25 x 1
	Side Return	Single	**44J22**	**44J22**
		Ten Pack	**66K63**	**66K63**
		Size of filter - in.	16 x 25 x 1	16 x 25 x 1
TERMINATION KITS				
See Installation Instructions for specific venting information.				
Direct Vent	Concentric	US - 2 in.	**71M80**	**69M29**
		3 in.	**- - -**	**60L46**
		Canada - 2 in.	**44W92**	**44W92**
		3 in.	**- - -**	**44W93**
	Flush-Mount	US - 2, 2-1/2 or 3 in.	**51W11**	**51W11**
		Canada - 2, 2-1/2 or 3 in.	**51W12**	**51W12**
	Wall - Close Couple	US - 2 in.	**22G44**	**- - -**
		3 in.	**44J40**	**44J40**
	Wall - Close Couple WTK	Canada - 2 in.	**30G28**	**- - -**
		3 in.	**81J20**	**81J20**
	Roof Termination Flashing Kit (no vent pipe - 2 flashings)	2 in.	**15F75**	**15F75**
		3 in.	**44J41**	**44J41**
VENTING				
Flue Coupling		2 in.	**17H92**	**17H92**

[1] Remote Outdoor Temperature Sensor is used with conventional (non-Lennox® Communicating) outdoor units (sensor is furnished with Lennox® Communicating outdoor units). Allows the thermostat to display outdoor temperature. Required in dual-fuel and EDA applications.

[2] Optional for service diagnostics.

[3] Cleanable polyurethane, frame-type filter.

NOTE - Termination Kits (**44W92**, **44W93**, **30G28**, **51W12**, **81J20**) and Crawl Space Vent Drain Kit (**15Z70**) are certified to ULC S636 standard for use in Canada only.

GAS HEAT ACCESSORIES

Input	Natural Gas to LPG/Propane Kit
	0 - 7500 ft.
040	**N/A**
060	**19K05**
080	**19K06**

NOTE - Natural Gas to LPG/Propane Kit is not available for 40K Input furnaces.

REFRIGERANT DETECTION SYSTEM (RDS) COMPONENTS

Description		Order No.
Refrigerant Detection System (RDS) Coil Sensor Kit		**26Z69**
Refrigerant Detection System (RDS) Blower Control Board	Any Lennox® Communicating Furnace or any Non-Communicating 24V Furnace (Universal)	**27A03**
	Any Non-Communicating 24V Furnace	**27A02**

NOTE - Communicating Blower Control Board and Sensor can be used universally with Lennox® communicating furnace or any non-communicating 24 volt furnace. Non-Communicating Blower Control Board and Sensor can be used with any non-communicating 24 volt furnace.

INSTALLATION CLEARANCES

Sides	[1] 1 inches (25 mm)
Rear	1 inches (25 mm)
Top/Plenum	1 inch (25 mm)
Front	1 inches (25 mm)
Front (service/alcove)	24 inches (610 mm)
Floor	[2] Combustible

NOTE − Air for combustion must conform to the methods outlined in the National Fuel Gas Code (NFPA 54/ANSI−Z223.1) or the National Standard of Canada CAN/CSA−B149.1 Natural Gas and Propane Installation Code".

NOTE − In the U.S. flue sizing must conform to the methods outlined in the current National Fuel Gas Code (NFPA 54/ANSI−Z223.1) or applicable provisions of local building codes. In Canada flue sizing must conform to the methods outlined in National Standard of Canada CAN/CSA−B149.1.

[1] Allow proper clearances to accommodate condensate trap and vent pipe installation.

[2] Do not install the furnace directly on carpeting, tile, or other combustible materials other than wood flooring.

HIGH ALTITUDE OPERATION

NOTE - Units may be installed at altitudes up to 7500 ft. above sea level.

OUTDOOR TERMINATION KIT USAGE

Input Size	Vent Pipe Diameter (in.)	Standard Terminations				Concentric Terminations			Muffler
		Flush Mount Kit	Wall Kit		Field Fabricated Exhaust Accelerator Size Required	Concentric Kit			
			2 inch	3 inch		1-1/2 inch	2 inch	3 inch	2 inch
		51W11 (US) [4] 51W12 (CA)	22G44 (US) [4] 30G28 (CA)	44J40 (US) [4] 81J20 (CA)		71M80 (US) [4] 44W92 (CA)	69M29 (US) [4] 44W92 (CA)	60L46 (US) [4] 44W93 (CA)	15Y66 (US)
040	2	[3] YES	YES	[1] YES	1-1/2 in.	[2] YES	- - -	- - -	YES
	3	[3] YES	YES	[1] YES	1-1/2 in.	[2] YES	- - -	- - -	YES
060	2	[3] YES	YES	[1] YES	1-1/2 in.	[2] YES	- - -	- - -	YES
	3	[3] YES	YES	[1] YES	1-1/2 in.	[2] YES	- - -	- - -	YES
080	2	[3] YES	- - -	YES	2 in.	- - -	YES	YES	YES
	3	[3] YES	- - -	YES	2 in.	- - -	YES	YES	YES

NOTE - Standard Terminations do not include any vent pipe or elbows external to the structure.
Any vent pipe or elbows external to the structure must be included in total vent length calculations. See Vent Length Tables.

[1] Requires field provided 1-1/2 in. outdoor exhaust accelerator.

[2] Concentric Kits **71M80** and **44W92** include 1-1/2 in. outdoor exhaust accelerator, required when used with 045 and 070 input models. Accelerator is not used with 090, 110, 135 input models.

[3] Flush Mount Kit **51W11** and **51W12** includes 1-1/2 in. outdoor exhaust accelerator, required when used with 045, 070 and 090 input models. Accelerator is not used with 110 or 135 input models.

[4] Termination Kits 30G28, **44W92**, **44W93**, **51W12** and **81J20** are certified to ULC S636 standard for use in Canada only.

VENT LENGTHS - UNINSULATED EXHAUST PIPE IN UNCONDITIONED SPACE - FEET

[1] Winter Design Temperatures	Vent Pipe Diameter	Unit Input Size					
		040		060		080	
		Maximum Uninsulated Exhaust Vent Length (ft.)					
		PVC	PolyPro InnoFlue	PVC	PolyPro InnoFlue	PVC	PolyPro InnoFlue
32 to 21°F	2 in.	21	18	33	30	46	42
	3 in.	12	12	21	21	30	30
20 to 1°F	2 in.	11	9	19	17	28	25
	3 in.	N/A	N/A	9	9	16	16
0 to –20°F	2 in.	6	4	12	10	19	16
	3 in.	N/A	N/A	N/A	N/A	8	8

NOTE - Concentric terminations are equivalent to 5 ft. of straight pipe and should be included when measuring total pipe length.

[1] Refer to 99% Minimum Design Temperature table provided in the current edition of ASHRAE Handbook-Fundamentals.

PolyPro® poly-propylene vent pipe is a registered trademark of DuraVent®.

Innoflue® is a registered trademark of Centrotherm Eco Systems.

VENT LENGTHS

STANDARD TERMINATION AT ELEVATION 0 - 4500 FT.

	Pipe Size	2 in.			3 in.		
	Input	**040**	**060**	**080**	**040**	**060**	**080**
No. of 90 ELL	1	81	66	44	138	137	118
	2	76	61	39	133	132	113
	3	71	56	34	128	127	108
	4	66	51	29	123	122	103
	5	61	46	24	118	117	98
	6	56	41	19	113	112	93
	7	51	36	14	108	107	88
	8	46	31	N/A	103	102	83
	9	41	26	N/A	98	97	78
	10	36	21	N/A	93	92	73

STANDARD TERMINATION AT ELEVATION 4501 - 6000 FT.

	Pipe Size	2 in.			3 in.		
	Input	**040**	**060**	**080**	**040**	**060**	**080**
No. of 90 ELL	1	81	41	34	138	105	100
	2	76	36	29	133	100	95
	3	71	31	24	128	95	90
	4	66	26	19	123	90	85
	5	61	21	14	118	85	80
	6	56	16	9	113	80	75
	7	51	11	N/A	108	75	70
	8	46	N/A	N/A	103	70	65
	9	41	N/A	N/A	98	65	60
	10	36	N/A	N/A	93	60	55

STANDARD TERMINATION AT ELEVATION 6001 - 7500 FT.

	Pipe Size	2 in.			3 in.		
	Input	**040**	**060**	**080**	**040**	**060**	**080**
No. of 90 ELL	1	81	29	24	138	105	100
	2	76	24	19	133	100	95
	3	71	19	14	128	95	90
	4	66	14	9	123	90	85
	5	61	9	N/A	118	85	80
	6	56	N/A	N/A	113	80	75
	7	51	N/A	N/A	108	75	70
	8	46	N/A	N/A	103	70	65
	9	41	N/A	N/A	98	65	60
	10	36	N/A	N/A	93	60	55

VENT LENGTHS

CONCENTRIC TERMINATION AT ELEVATION 0 - 4500 ft.

	Pipe Size	2 in.			3 in.		
	Input	**040**	**060**	**080**	**040**	**060**	**080**
No. of 90 ELL	1	73	58	42	121	121	114
	2	68	53	37	116	116	109
	3	63	48	32	111	111	104
	4	58	43	27	106	106	99
	5	53	38	22	101	101	94
	6	48	33	17	96	96	89
	7	43	28	12	91	91	84
	8	38	23	N/A	86	86	79
	9	33	18	N/A	81	81	74
	10	28	13	N/A	76	76	69

CONCENTRIC TERMINATION AT ELEVATION 4501 - 6000 FT.

	Pipe Size	2 in.			3 in.		
	Input	**040**	**060**	**080**	**040**	**060**	**080**
No. of 90 ELL	1	73	33	32	121	89	89
	2	68	28	27	116	84	84
	3	63	23	22	111	79	79
	4	58	18	17	106	74	74
	5	53	13	12	101	69	69
	6	48	N/A	N/A	96	64	64
	7	43	N/A	N/A	91	59	59
	8	38	N/A	N/A	86	54	54
	9	33	N/A	N/A	81	49	49
	10	28	N/A	N/A	76	44	44

CONCENTRIC TERMINATION AT ELEVATION 6001 - 7500 FT.

	Pipe Size	2 in.			3 in.		
	Input	**040**	**060**	**080**	**040**	**060**	**080**
No. of 90 ELL	1	73	27	22	121	89	89
	2	68	22	17	116	84	84
	3	63	17	12	111	79	79
	4	58	12	7	106	74	74
	5	53	7	N/A	101	69	69
	6	48	N/A	N/A	96	64	64
	7	43	N/A	N/A	91	59	59
	8	38	N/A	N/A	86	54	54
	9	33	N/A	N/A	81	49	49
	10	28	N/A	N/A	76	44	44

VENT LENGTHS (EXHAUST) - VENTILATED ATTIC OR CRAWLSPACE INTAKE AIR - FEET

STANDARD TERMINATION AT ELEVATION 0 - 4500 FT.

	Pipe Size	2 in.			3 in.		
	Input	040	060	080	040	060	080
No. of 90 ELL	1	71	56	34	118	117	98
	2	66	51	29	113	112	93
	3	61	46	24	108	107	88
	4	56	41	19	103	102	83
	5	51	36	14	98	97	78
	6	46	31	9	93	92	73
	7	41	26	4	88	87	68
	8	36	21	N/A	83	82	63
	9	31	16	N/A	78	77	58
	10	26	11	N/A	73	72	53

STANDARD TERMINATION AT ELEVATION 4501 - 6000 FT.

	Pipe Size	2 in.			3 in.		
	Input	040	060	080	040	060	080
No. of 90 ELL	1	71	31	24	118	85	80
	2	66	26	19	113	80	75
	3	61	21	14	108	75	70
	4	56	16	9	103	70	65
	5	51	11	N/A	98	65	60
	6	46	N/A	N/A	93	60	55
	7	41	N/A	N/A	88	55	50
	8	36	N/A	N/A	83	50	45
	9	31	N/A	N/A	78	45	40
	10	26	N/A	N/A	73	40	35

STANDARD TERMINATION AT ELEVATION 6001 - 7500 FT.

	Pipe Size	2 in.			3 in.		
	Input	040	060	080	040	060	080
No. of 90 ELL	1	71	19	14	118	85	80
	2	66	14	9	113	80	75
	3	61	9	N/A	108	75	70
	4	56	N/A	N/A	103	70	65
	5	51	N/A	N/A	98	65	60
	6	46	N/A	N/A	93	60	55
	7	41	N/A	N/A	88	55	50
	8	36	N/A	N/A	83	50	45
	9	31	N/A	N/A	78	45	40
	10	26	N/A	N/A	73	40	35

[1] NOTE - 60C size units that require air volumes over 1800 cfm must have one of the following:
1. Single side return air and Optional Return Air Base with transition that must accommodate required 20 x 25 x 1 inch (508 x 635 x 25 mm) air filter to maintain proper velocity.
2. Bottom return air.
3. Return air from both sides.
4. Bottom and one side return air.

See Blower Performance Tables for additional information.

[2] Optional Side Return Air Filter Kit is not for use with the Optional Return Air Base.

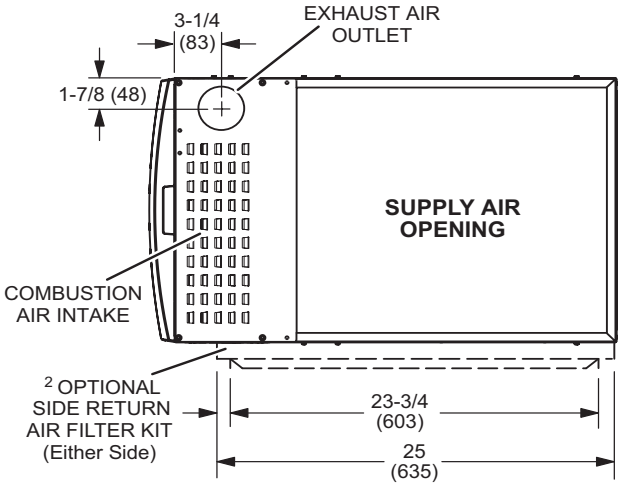

TOP VIEW

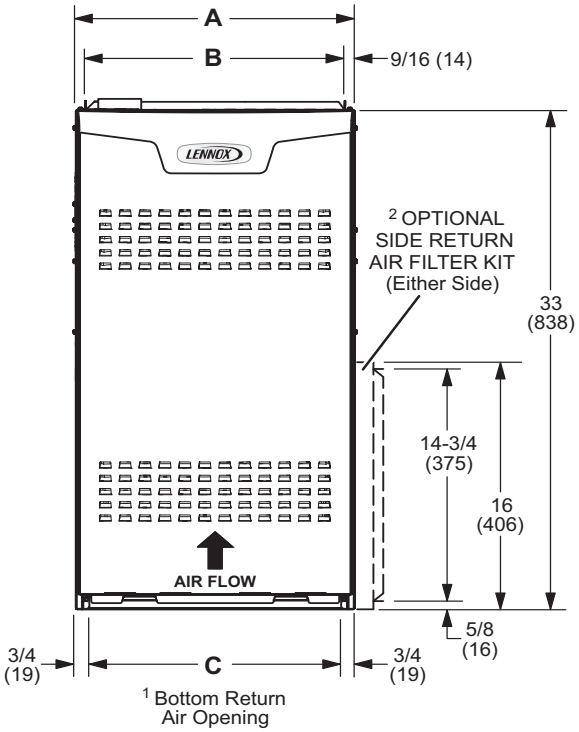

FRONT VIEW

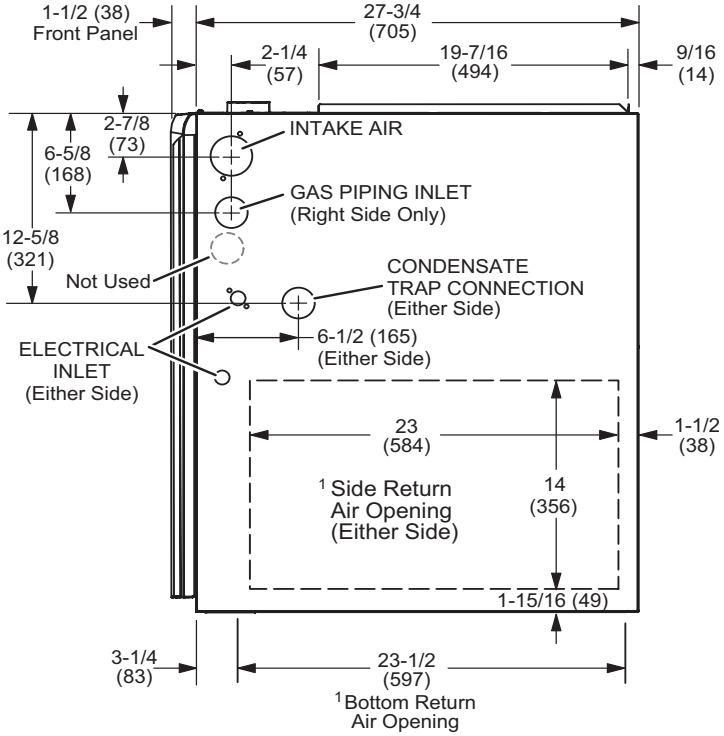

SIDE VIEW

Model No.	A		B		C	
	in.	mm	in.	mm	in.	mm
SL297UH040NV36B SL297UH060NV36B	17-1/2	446	16-3/8	416	16	406
SL297UH080NV48C SL297UH080NV60C	21	533	19-7/8	505	19-1/2	495

LEFT-HAND AIR DISCHARGE

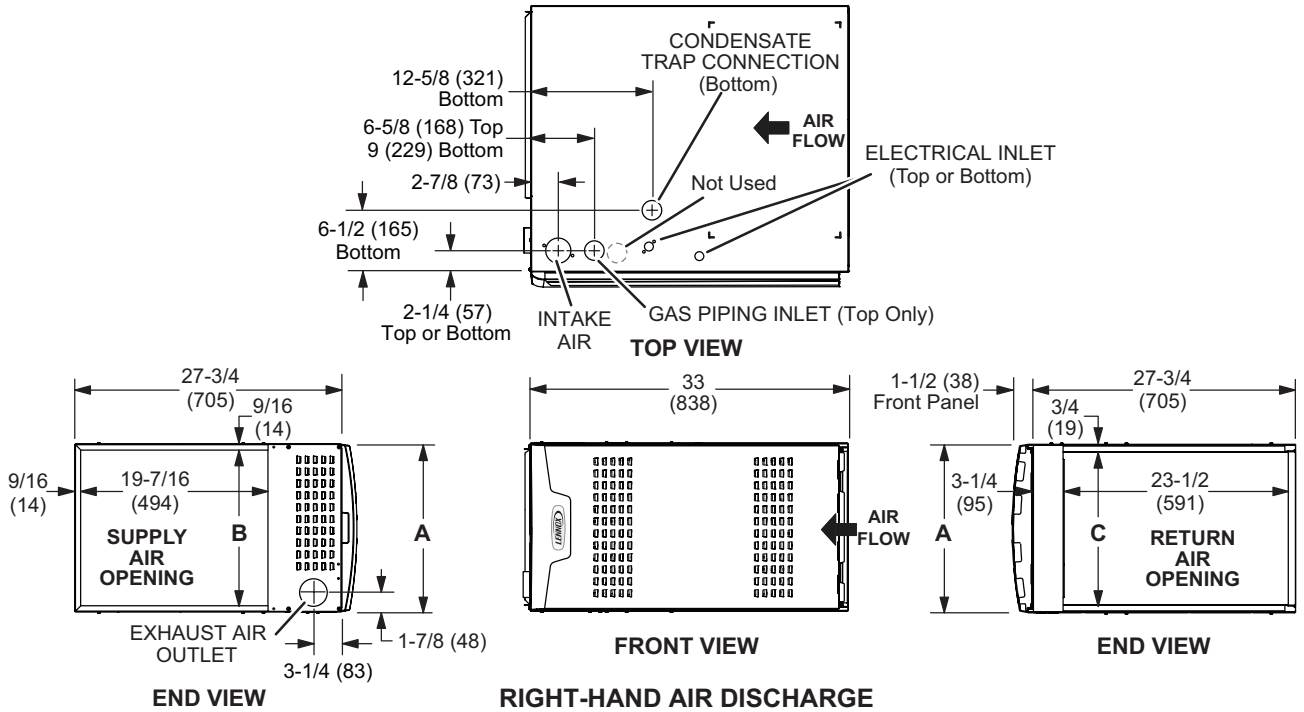

RIGHT-HAND AIR DISCHARGE

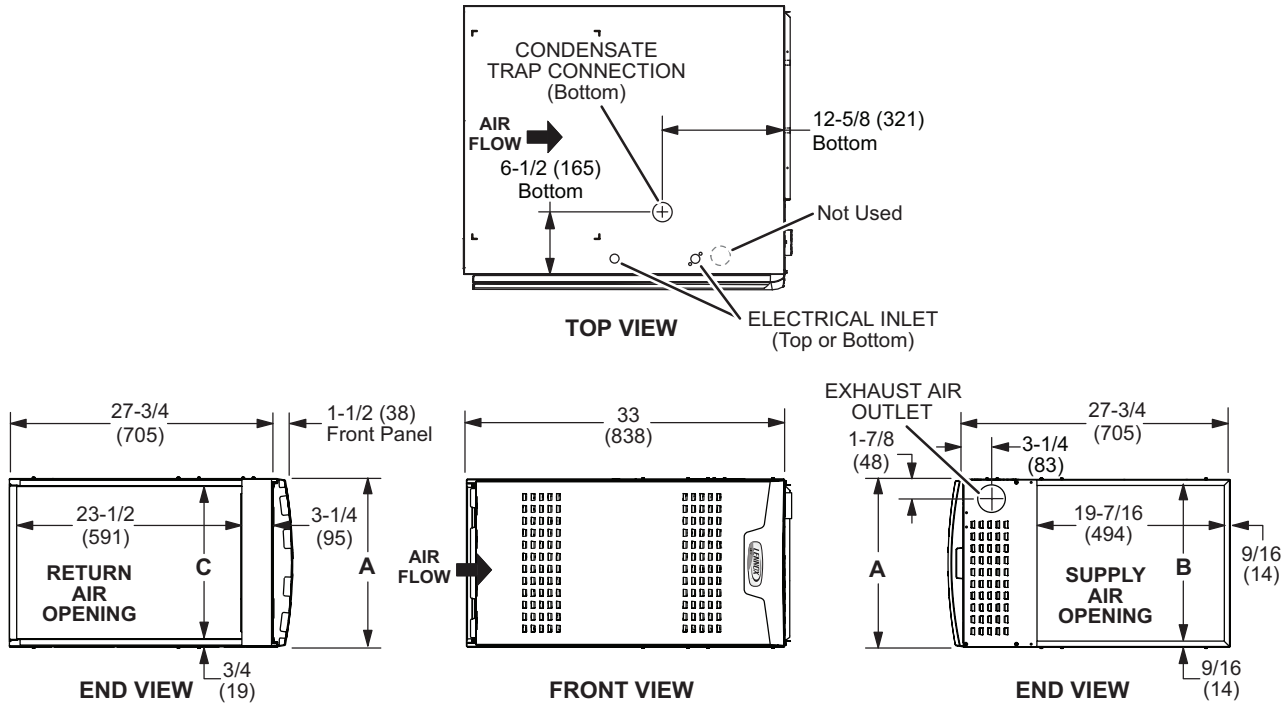

Model No.	A		B		C	
	in.	mm	in.	mm	in.	mm
SL297UH040NV36B SL297UH060NV36B	17-1/2	446	16-3/8	416	16	406
SL297UH080NV48C SL297UH080NV60C	21	533	19-7/8	505	19-1/2	495

HORIZONTAL (END) FILTER KIT

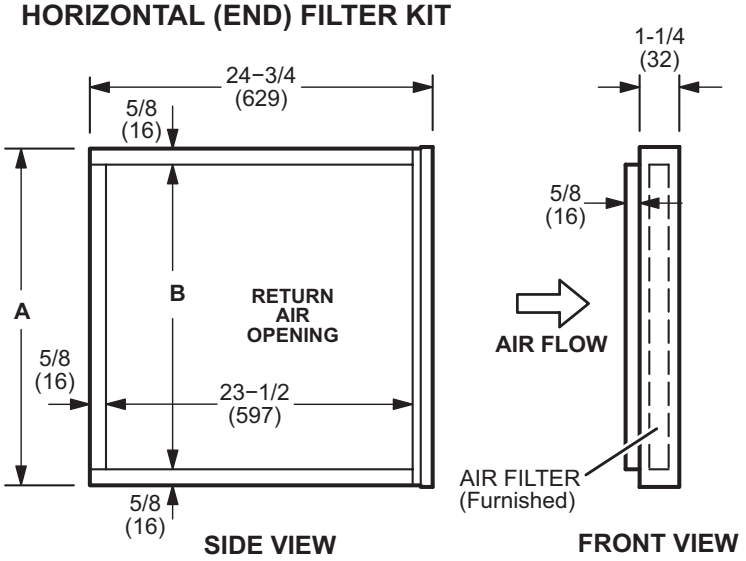

Furnace Cabinet Width	Catalog Number	A		B	
		in.	mm	in.	mm
B	87L96	18	457	16-3/4	425
C	87L97	21	533	18-3/4	476

Optional Return Air Base
(Upflow Applications Only - For use with B and C cabinets)

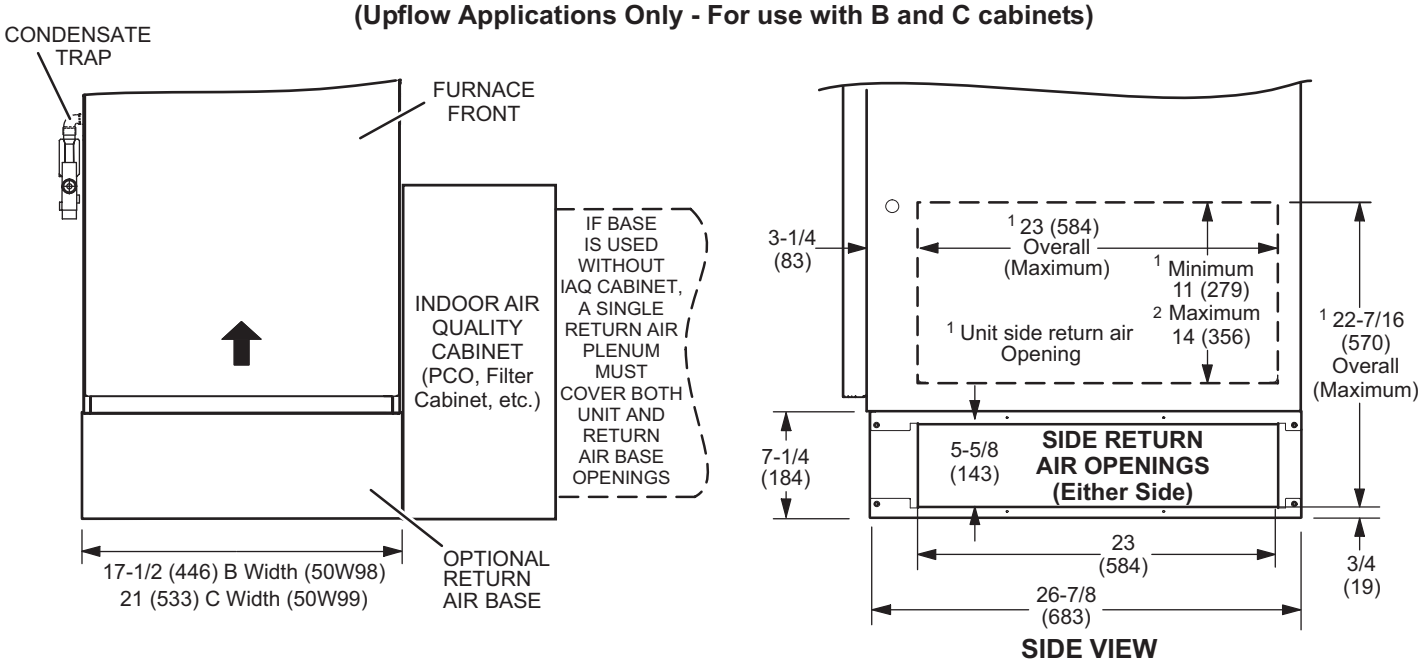

NOTE- Optional Side Return Air Filter Kits are not for use with Optional Return Air Base.

[1] Both the unit return air opening and the base return air opening must be covered by a single plenum or IAQ cabinet. Minimum unit side return air opening dimensions for units requiring 1800 cfm or more of air (W x H): 23 x 11 in. (584 x 279 mm). The opening can be cut as needed to accommodate plenum or IAQ cabinet while maintaining dimensions shown. Side return air openings must be cut in the field. There are cutting guides stenciled on the cabinet for the side return air opening. The size of the opening must not extend beyond the markings on the furnace cabinet.

[2] To minimize pressure drop, the largest opening height possible, up to 14 in. (356 mm), is preferred.

FLUSH-MOUNT VENT TERMINATION KIT 51W11 (US) or 51W12 (CANADA)

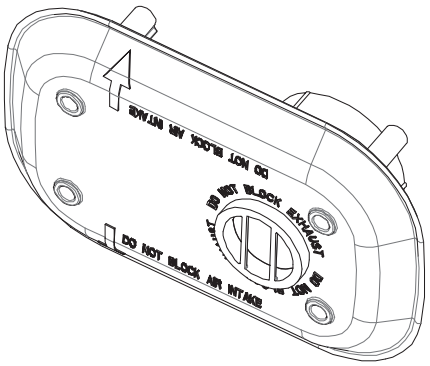

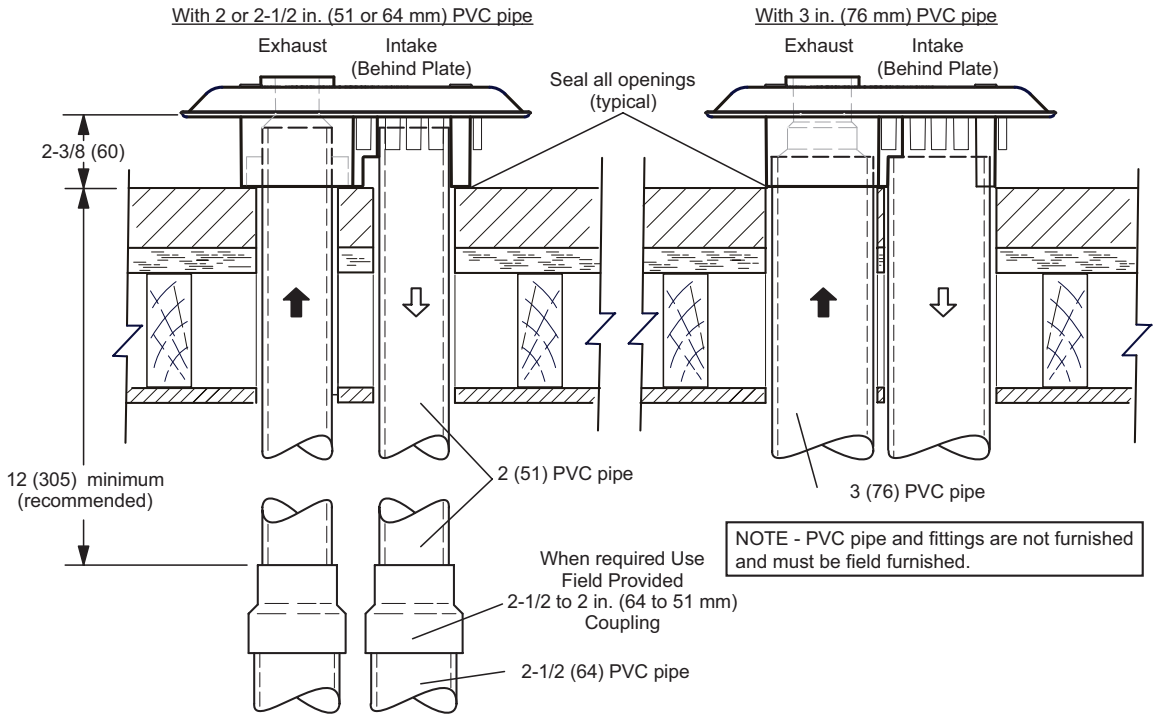

NOTE - PVC pipe and fittings are not furnished and must be field furnished.

MUFFLERS
15Y66 - 2-inch

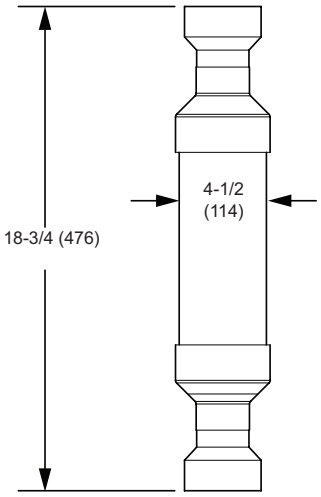

(Installed Vertically
in the Exhaust Pipe)

CONCENTRIC WALL TERMINATION APPLICATIONS

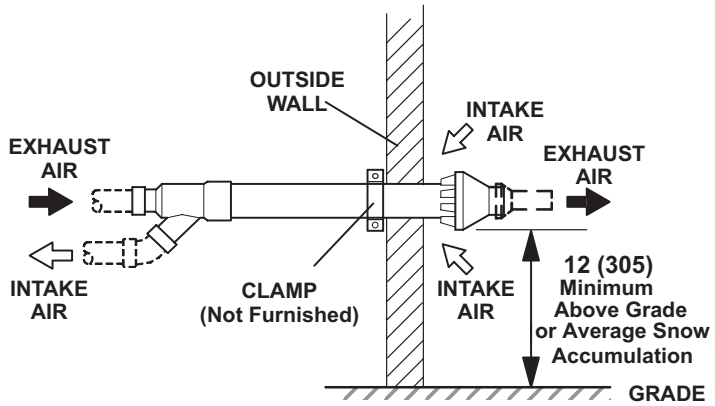

CONCENTRIC ROOF TERMINATION APPLICATIONS

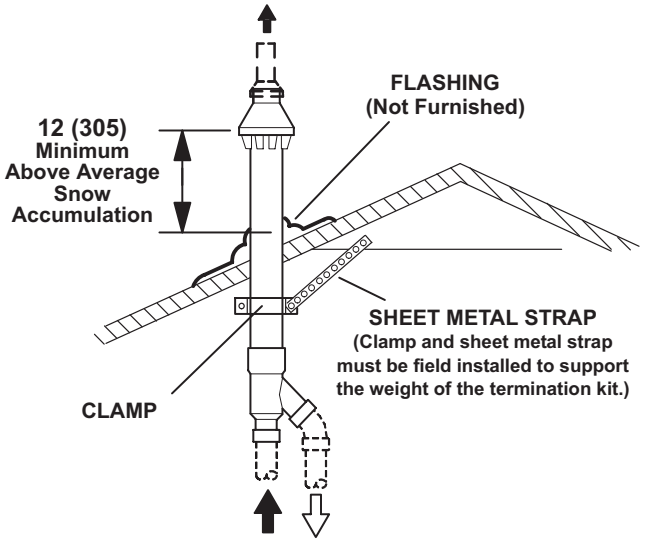

71M80 / 69M29 / 44W92 − 2 inch kits
60L46 / 44W93 − 3 inch kits
See Installation Instructions for additional information.

Note - Field provided reducer may be required to adapt different vent pipe sizes to termination.

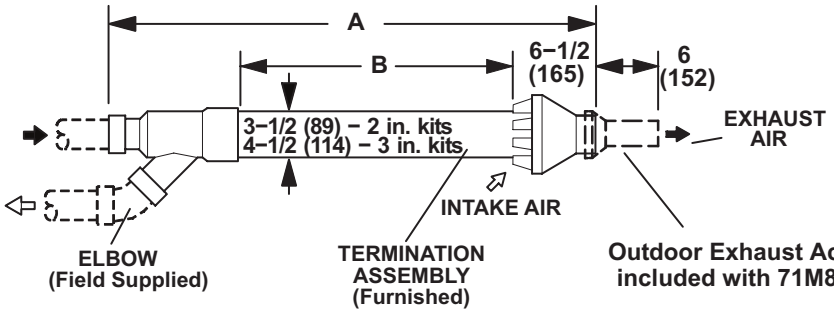

Cat. No.	A		B	
	in.	mm	in.	mm
71M80 69M29	33−3/8	848	16−3/4	425
44W92 (Canada)	29	737	15−1/2	394
60L46	38−7/8	987	21−3/16	538
44W93 (Canada)	36−1/8	918	19−1/2	495

NOTE − Typical illustration for dimensions only. Design may vary depending on kit ordered.

WALL TERMINATION KITS (CLOSE-COUPLE)
EXTENDED VENT FOR GRADE CLEARANCE
2 inch (51 mm) 22G44 (US)
3 inch (76 mm) 44J40 (US)
See Installation Instructions for additional information.

Note - Field provided reducer may be required to adapt different vent pipe sizes to termination.

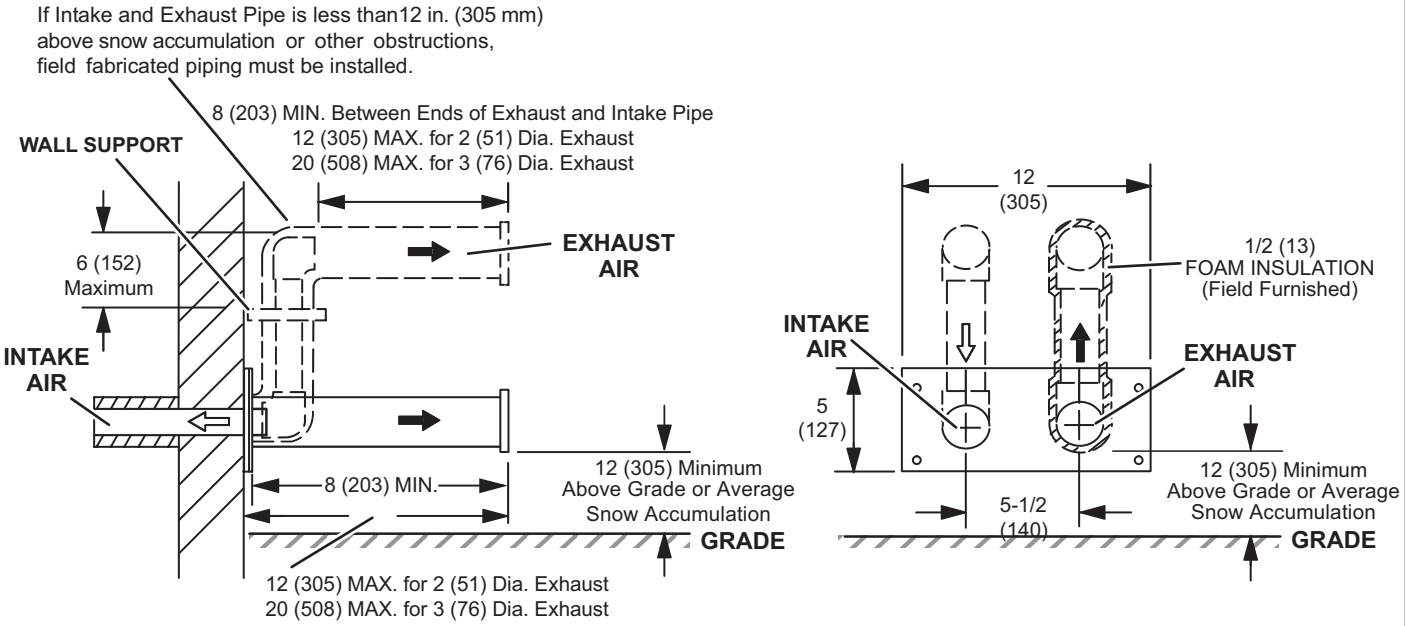

WALL TERMINATION KITS (CLOSE-COUPLE)
EXTENDED VENT FOR GRADE CLEARANCE
2 inch (51 mm) 30G28 (WTK Canada)
3 inch (76 mm) 81J20 (WTK Canada)
See Installation Instructions for additional information.

Note - Field provided reducer may be required to adapt different vent pipe sizes to termination.

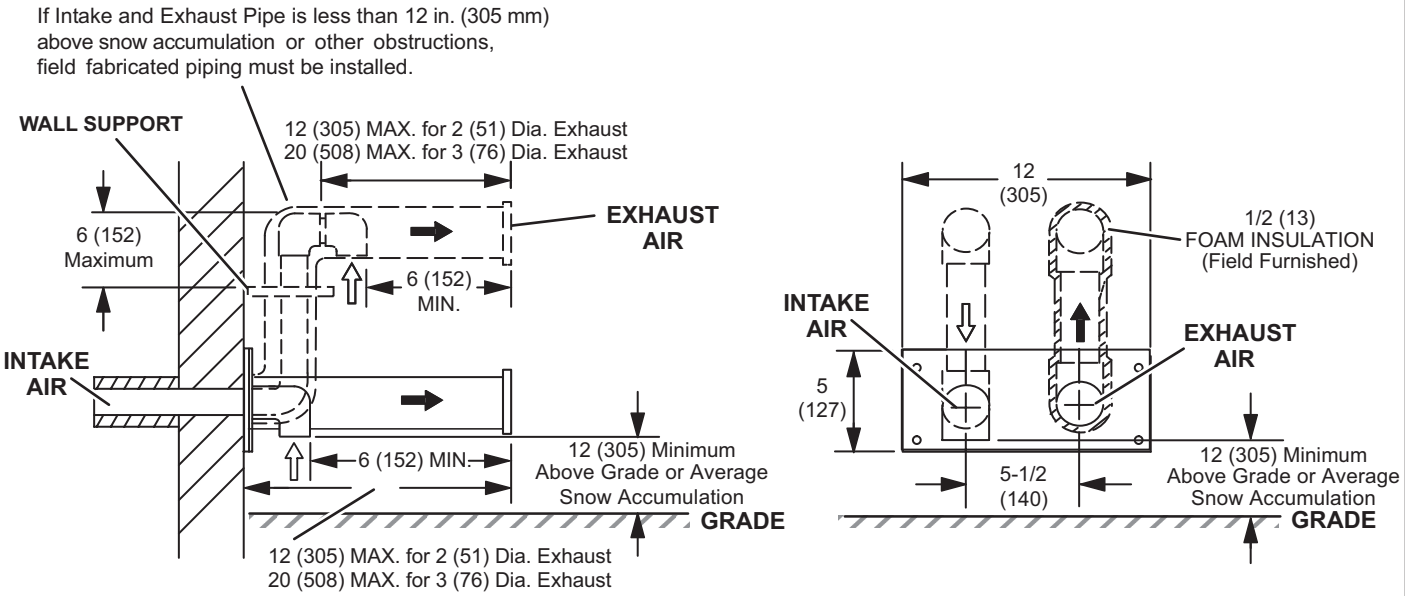

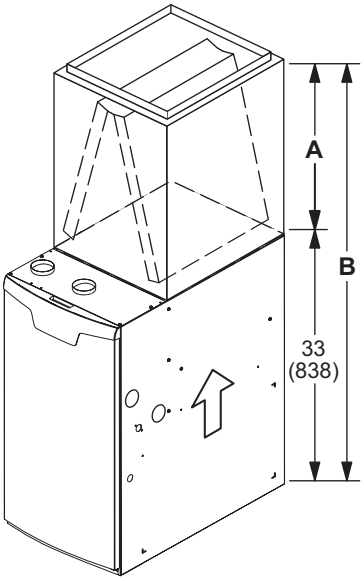

UPFLOW POSITION - CASED

Model		A		B	
CK40CT	**C35/CX35**	**in.**	**mm**	**in.**	**mm**
CK40CT-18/24B	C35/CX35-18/24B	16-1/2	419	49-1/2	1257
CK40CT-24B	C35/CX35-24B	18-1/2	470	51-1/2	1308
CK40CT-30B	C35/CX35-30B	22-1/2	572	55-1/2	1410
CK40CT-30/36B CK40CT-30/36C	C35/CX35-30/36B C35/CX35-30/36C	24-1/2	622	57-1/2	1461
CK40CT-36B	C35/CX35-36B	24-1/2	622	57-1/2	1461
CK40CT-48B CK40CT-48C	C35/CX35-48B C35/CX35-48C	27-1/2	699	60-1/2	1537
CK40CT-49C	C35/CX35-49C	29-1/2	749	62-1/2	1588
CK40CT-50/60C	C35/CX35-50/60C	27-1/2	699	60-1/2	1537
CK40CT-60C	CX35-60C	31-1/2	800	64-1/2	1638

UPFLOW POSITION - UNCASED

Model		A		B	
CK40UT	**C35**	**in.**	**mm**	**in.**	**mm**
CK40UT-18/24B	C35-18/24B	14-1/8	359	47-1/8	1197
CK40UT-24B	C35-24B	16-3/8	416	49-3/8	1254
CK40UT-30B	C35-30B	20-3/4	527	53-3/4	1365
CK40UT-30/36B CK40UT-30/36C	C35-30/36B C35-30/36C	22-1/4	565	55-1/4	1403
CK40UT-36B	C35-36B	22-3/8	568	55-3/8	1407
CK40UT-48B CK40UT-48C	C35-48B C35-48C	26-1/4	667	59-1/4	1505
CK40UT-49C	C35-49C	28-1/2	724	61-1/2	1562
CK40UT-50/60C	C35-50/60C	25-7/8	657	58-7/8	1495
CK40UT-60C	C35-60C	30-5/8	778	63-5/8	1616

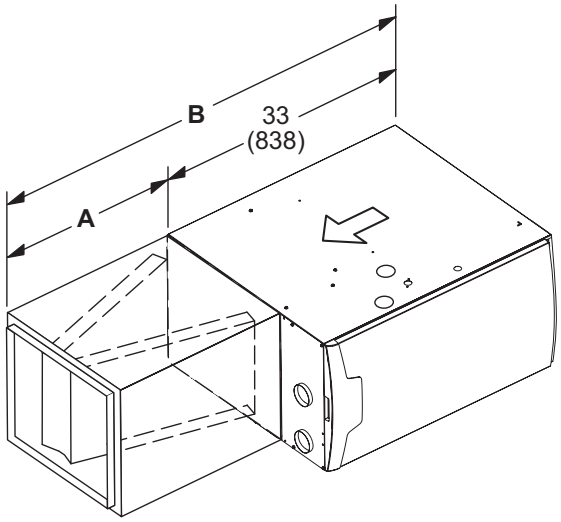

HORIZONTAL POSITION

Model		A		B	
CK40HT	**CHX35**	**in.**	**mm**	**in.**	**mm**
CK40HT-24B CK40HT-30B CK40HT-36B CK40HT-36C CK40HT-42C CK40HT-48C	CHX35-24B CHX35-30B CHX35-36B CHX35-36C CHX35-42C CHX35-48C	26-1/2	673	59-1/2	1511
CK40CT-42B CK40CT-48B CK40CT-51	CHX35-42B CHX35-48B CHX35-51	31-1/2	880	64-1/2	1638

BLOWER DATA

SL297UH040NV36B BLOWER PERFORMANCE (less filter)

BOTTOM RETURN AIR

0 through 0.8 in. w.g. (Heating) and 0 through 1.0 in. w.g. (Cooling) External Static Pressure Range

HEATING		
[1] Heating Speed DIP Switch Settings	First Stage Heating Speed - cfm	Second Stage Heating Speed - cfm
+24%	1151	1153
+18%	1101	1099
+12%	816	1041
+6%	771	999
Factory Default	704	944
–6%	651	887
–12%	578	826
–18%	542	757

COOLING								
[1] Cooling Speed DIP Switch Settings	First Stage Cooling Speed - cfm				Second Stage Cooling Speed - cfm			
	Low	Medium-Low	Medium-High	[2] High	Low	Medium-Low	Medium-High	[2] High
+	549	732	862	970	907	1072	1233	1373
Factory Default	521	637	760	873	830	975	1117	1268
–	441	560	684	784	736	874	1014	1142

[1] Cooling and heating speeds are based on a combination of DIP switch settings on the furnace control. Refer to Installation Instructions for specific DIP Switch Settings.

[2] Factory default setting.

NOTES - The effect of static pressure is included in air volumes shown.
First stage HEAT is approximately 91% of the same second stage HEAT.
First stage COOL (two-stage air conditioning units only) is approximately 70% of the same second stage COOL speed position.
Continuous Fan Only speed is selectable at 28% and 38% of the selected second stage cooling speed - minimum 250 cfm.
Lennox® Smart Zoning System Applications - Minimum blower speed is 250 cfm.

SL297UH040NV36B BLOWER MOTOR WATTS (COOLING)

[1] Cooling Speed DIP Switch Settings		Motor Watts @ Various External Static Pressures - in. wg.																			
		First Stage									Second Stage										
		0	0.1	0.2	0.3	0.4	0.5	0.6	0.7	0.8	0	0.1	0.2	0.3	0.4	0.5	0.6	0.7	0.8	0.9	1.0
+ Setting																					
Cooling Speed	Low	17	30	47	64	78	97	113	130	152	60	80	109	130	158	181	205	231	251	271	288
	Med-low	31	39	60	91	118	136	156	182	199	112	132	158	186	214	237	263	288	315	344	359
	Med-High	65	77	96	126	144	174	191	217	238	176	196	225	257	288	318	344	372	402	432	455
	High	87	104	128	157	178	201	227	250	276	256	277	309	338	373	404	431	465	493	521	531
Factory Default																					
Cooling Speed	Low	23	27	42	57	70	86	108	120	139	45	59	85	108	132	156	179	197	213	241	257
	Med-low	25	35	57	78	101	117	145	155	179	86	95	125	147	175	197	223	252	275	296	320
	Med-High	41	58	82	102	130	145	171	186	206	125	150	175	204	233	260	281	314	340	363	395
	High	65	84	108	133	157	175	198	222	246	201	219	245	277	310	338	364	392	420	451	483
– Setting																					
Cooling Speed	Low	15	23	35	37	65	82	96	117	127	31	42	64	89	111	133	150	169	190	207	230
	Med-low	19	28	46	65	81	99	113	134	152	62	74	99	120	147	170	194	214	238	258	278
	Med-High	25	32	58	86	105	125	144	166	183	86	107	137	159	185	212	236	263	286	308	335
	High	45	59	82	102	131	151	172	197	212	130	160	190	218	246	271	295	321	351	377	404

BLOWER DATA

SL297UH040NV36B BLOWER PERFORMANCE (less filter)

SINGLE SIDE RETURN AIR

0 through 0.8 in. w.g. (Heating) and 0 through 1.0 in. w.g. (Cooling) External Static Pressure Range

HEATING		
[1] Heating Speed DIP Switch Settings	First Stage Heating Speed - cfm	Second Stage Heating Speed - cfm
+24%	863	1129
+18%	807	1087
+12%	761	1021
+6%	713	775
Factory Default	716	723
–6%	683	686
–12%	589	599
–18%	562	558

COOLING								
[1] Cooling Speed DIP Switch Settings	First Stage Cooling Speed - cfm				Second Stage Cooling Speed - cfm			
	Low	Medium-Low	Medium-High	[2] High	Low	Medium-Low	Medium-High	[2] High
+	554	705	841	958	868	1057	1217	1344
Factory Default	509	606	724	875	799	969	1109	1253
–	436	559	675	754	703	860	1002	1137

[1] Cooling and heating speeds are based on a combination of DIP switch settings on the furnace control. Refer to Installation Instructions for specific DIP Switch Settings.

[2] Factory default setting.

NOTES - The effect of static pressure is included in air volumes shown.
First stage HEAT is approximately 91% of the same second stage HEAT.
First stage COOL (two-stage air conditioning units only) is approximately 70% of the same second stage COOL speed position.
Continuous Fan Only speed is selectable at 28% and 38% of the selected second stage cooling speed - minimum 250 cfm.
Lennox® Smart Zoning System Applications - Minimum blower speed is 250 cfm.

SL297UH040NV36B BLOWER MOTOR WATTS (COOLING)

[1] Cooling Speed DIP Switch Settings		Motor Watts @ Various External Static Pressures - in. wg.																			
		First Stage									Second Stage										
		0	0.1	0.2	0.3	0.4	0.5	0.6	0.7	0.8	0	0.1	0.2	0.3	0.4	0.5	0.6	0.7	0.8	0.9	1.0
+ Setting																					
Cooling Speed	Low	21	32	44	63	81	97	121	136	150	65	85	103	127	154	173	199	220	242	264	287
	Med-low	30	44	67	90	116	136	158	176	200	122	142	162	188	211	235	264	289	318	341	366
	Med-High	41	68	94	120	144	166	191	214	234	181	203	232	261	287	316	346	377	408	432	452
	High	85	105	129	159	173	203	228	248	276	262	281	313	347	374	393	429	463	496	514	534
Factory Default																					
Cooling Speed	Low	17	24	42	57	72	87	110	124	138	42	57	83	106	128	150	174	200	217	236	260
	Med-low	25	35	56	74	96	122	138	159	187	84	101	127	149	171	198	220	247	270	292	320
	Med-High	45	59	74	100	124	152	165	190	207	123	150	187	213	238	257	289	316	338	361	395
	High	68	85	111	133	154	179	201	227	249	200	222	255	286	314	337	366	396	413	454	476
– Setting																					
Cooling Speed	Low	18	24	35	48	64	79	95	117	127	35	42	67	83	106	126	151	166	191	201	236
	Med-low	21	29	45	65	79	95	114	137	159	61	72	99	122	142	166	187	211	230	259	278
	Med-High	23	32	62	83	105	127	144	167	186	84	105	141	160	188	209	242	259	285	311	328
	High	45	58	83	100	124	150	168	188	211	132	166	198	217	243	273	303	331	360	374	400

BLOWER DATA

SL297UH040NV36B BLOWER PERFORMANCE (less filter)

SINGLE SIDE RETURN AIR WITH OPTIONAL RETURN AIR BASE

0 through 0.8 in. w.g. (Heating) and 0 through 1.0 in. w.g. (Cooling) External Static Pressure Range

HEATING		
[1] Heating Speed DIP Switch Settings	First Stage Heating Speed - cfm	Second Stage Heating Speed - cfm
+24%	886	905
+18%	825	859
+12%	802	819
+6%	769	770
Factory Default	688	736
–6%	634	678
–12%	635	605
–18%	547	553

COOLING								
[1] Cooling Speed DIP Switch Settings	First Stage Cooling Speed - cfm				Second Stage Cooling Speed - cfm			
	Low	Medium-Low	Medium-High	[2] High	Low	Medium-Low	Medium-High	[2] High
+	542	698	835	947	886	1034	1201	1320
Factory Default	462	634	735	855	808	949	1096	1248
–	413	534	678	779	734	868	987	1130

[1] Cooling and heating speeds are based on a combination of DIP switch settings on the furnace control. Refer to Installation Instructions for specific DIP Switch Settings.

[2] Factory default setting.

NOTES - The effect of static pressure is included in air volumes shown.
First stage HEAT is approximately 91% of the same second stage HEAT.
First stage COOL (two-stage air conditioning units only) is approximately 70% of the same second stage COOL speed position.
Continuous Fan Only speed is selectable at 28% and 38% of the selected second stage cooling speed - minimum 250 cfm.
Lennox® Smart Zoning System Applications - Minimum blower speed is 250 cfm.

SL297UH040NV36B BLOWER MOTOR WATTS (COOLING)

[1] Cooling Speed DIP Switch Settings		Motor Watts @ Various External Static Pressures - in. wg.																			
		First Stage									Second Stage										
		0	0.1	0.2	0.3	0.4	0.5	0.6	0.7	0.8	0	0.1	0.2	0.3	0.4	0.5	0.6	0.7	0.8	0.9	1.0
+ Setting																					
Cooling Speed	Low	20	29	49	62	84	94	108	129	144	61	75	98	126	150	177	197	219	241	268	284
	Med-low	35	42	65	87	110	134	152	174	195	102	126	153	174	204	229	255	284	305	333	357
	Med-High	45	67	94	115	135	165	184	204	231	177	196	218	256	281	307	338	364	396	414	442
	High	87	95	121	146	166	201	220	244	269	235	260	288	324	357	381	406	439	474	502	529
Factory Default																					
Cooling Speed	Low	18	24	39	53	70	85	104	123	145	44	52	81	104	123	146	169	192	210	234	255
	Med-low	26	33	51	72	88	114	137	155	174	81	91	114	142	167	190	215	240	264	289	310
	Med-High	34	50	75	92	116	140	163	182	204	129	143	167	190	220	243	277	298	322	360	388
	High	60	77	94	122	145	170	193	216	235	188	205	234	264	288	318	351	377	405	437	466
– Setting																					
Cooling Speed	Low	14	21	35	48	63	84	92	109	128	25	35	64	88	109	136	150	176	194	216	234
	Med-low	20	30	42	59	77	100	126	139	150	46	64	84	113	136	166	187	206	229	252	271
	Med-High	22	32	49	85	99	124	142	164	187	88	101	131	152	183	204	225	256	278	304	331
	High	45	62	70	106	122	150	167	196	218	138	155	177	204	232	264	284	317	342	366	389

BLOWER DATA

SL297UH060NV36B BLOWER PERFORMANCE (less filter)

BOTTOM RETURN AIR

0 through 0.8 in. w.g. (Heating) and 0 through 1.0 in. w.g. (Cooling) External Static Pressure Range

HEATING		
[1] Heating Speed DIP Switch Settings	First Stage Heating Speed - cfm	Second Stage Heating Speed - cfm
+24%	1106	1234
+18%	1047	1158
+12%	989	1110
+6%	940	1054
Factory Default	886	999
–6%	837	947
–12%	780	882
–18%	722	826

COOLING								
[1] Cooling Speed DIP Switch Settings	First Stage Cooling Speed - cfm				Second Stage Cooling Speed - cfm			
	Low	Medium-Low	Medium-High	[2] High	Low	Medium-Low	Medium-High	[2] High
+	611	739	843	949	879	1046	1212	1380
Factory Default	554	681	783	883	816	952	1107	1254
–	486	630	712	802	739	876	1006	1132

[1] Cooling and heating speeds are based on a combination of DIP switch settings on the furnace control. Refer to Installation Instructions for specific DIP Switch Settings.

[2] Factory default setting.

NOTES - The effect of static pressure is included in air volumes shown.
First stage HEAT is approximately 91% of the same second stage HEAT.
First stage COOL (two-stage air conditioning units only) is approximately 70% of the same second stage COOL speed position.
Continuous Fan Only speed is selectable at 28% and 38% of the selected second stage cooling speed - minimum 250 cfm.
Lennox® Smart Zoning System Applications - Minimum blower speed is 250 cfm.

SL297UH060NV36B BLOWER MOTOR WATTS (COOLING)

[1] Cooling Speed DIP Switch Settings		Motor Watts @ Various External Static Pressures - in. wg.																			
		First Stage									Second Stage										
		0	0.1	0.2	0.3	0.4	0.5	0.6	0.7	0.8	0	0.1	0.2	0.3	0.4	0.5	0.6	0.7	0.8	0.9	1.0
+ Setting																					
Cooling Speed	Low	32	44	59	77	94	109	126	142	157	71	86	110	132	158	179	204	225	238	258	277
	Med-low	45	62	79	97	123	138	156	177	193	126	142	166	189	211	236	263	293	317	335	358
	Med-High	67	81	103	124	150	174	192	206	231	182	202	232	259	288	316	343	372	405	430	459
	High	88	107	135	154	183	201	229	254	273	269	293	328	364	386	420	444	481	511	530	521
Factory Default																					
Cooling Speed	Low	26	37	56	67	82	94	113	129	148	70	87	97	119	144	166	177	203	213	229	251
	Med-low	33	45	71	88	112	131	142	158	173	100	112	134	154	179	208	233	253	279	293	306
	Med-High	43	67	87	113	135	148	171	188	207	134	157	188	216	239	268	299	321	349	374	397
	High	78	96	117	137	156	184	209	222	250	203	229	256	284	317	346	370	404	433	466	491
– Setting																					
Cooling Speed	Low	19	29	44	56	74	86	100	118	130	35	54	79	95	118	143	154	168	190	205	221
	Med-low	33	45	59	77	95	111	130	143	163	68	83	108	128	149	171	197	217	236	255	270
	Med-High	40	50	73	92	115	132	145	164	178	98	115	143	165	192	214	242	266	289	310	329
	High	49	66	94	113	133	156	171	196	207	145	164	194	222	247	275	305	332	352	380	411

BLOWER DATA

SL297UH060NV36B BLOWER PERFORMANCE (less filter)

SINGLE SIDE RETURN AIR

0 through 0.8 in. w.g. (Heating) and 0 through 1.0 in. w.g. (Cooling) External Static Pressure Range

HEATING		
[1] Heating Speed DIP Switch Settings	First Stage Heating Speed - cfm	Second Stage Heating Speed - cfm
+24%	1114	1237
+18%	1063	1168
+12%	1010	1106
+6%	951	1064
Factory Default	892	1003
–6%	837	942
–12%	761	869
–18%	693	809

COOLING								
[1] Cooling Speed DIP Switch Settings	First Stage Cooling Speed - cfm				Second Stage Cooling Speed - cfm			
	Low	Medium-Low	Medium-High	[2] High	Low	Medium-Low	Medium-High	[2] High
+	599	749	867	981	892	1057	1229	1404
Factory Default	549	656	754	866	775	958	1115	1279
–	475	609	680	773	708	854	1011	1147

[1] Cooling and heating speeds are based on a combination of DIP switch settings on the furnace control. Refer to Installation Instructions for specific DIP Switch Settings.

[2] Factory default setting.

NOTES - The effect of static pressure is included in air volumes shown.
First stage HEAT is approximately 91% of the same second stage HEAT.
First stage COOL (two-stage air conditioning units only) is approximately 70% of the same second stage COOL speed position.
Continuous Fan Only speed is selectable at 28% and 38% of the selected second stage cooling speed - minimum 250 cfm.
Lennox® Smart Zoning System Applications - Minimum blower speed is 250 cfm.

SL297UH060NV36B BLOWER MOTOR WATTS (COOLING)

[1] Cooling Speed DIP Switch Settings		Motor Watts @ Various External Static Pressures - in. wg.																			
		First Stage									Second Stage										
		0	0.1	0.2	0.3	0.4	0.5	0.6	0.7	0.8	0	0.1	0.2	0.3	0.4	0.5	0.6	0.7	0.8	0.9	1.0
+ Setting																					
Cooling Speed	Low	33	42	60	75	92	107	124	144	164	88	97	116	142	158	186	203	226	245	265	284
	Med-low	46	62	84	104	124	141	160	180	197	126	149	176	199	221	253	274	295	324	345	368
	Med-High	71	88	107	131	151	177	196	211	227	204	226	251	279	306	333	358	382	413	448	471
	High	101	119	142	169	189	214	242	262	271	311	333	366	396	421	458	481	511	527	528	498
Factory Default																					
Cooling Speed	Low	27	34	54	67	79	91	108	132	142	56	74	97	118	138	155	173	198	212	232	246
	Med-low	34	42	66	88	104	122	133	154	172	101	118	142	164	187	209	234	254	271	295	316
	Med-High	60	70	86	108	126	147	169	185	201	155	178	201	230	251	282	307	330	352	377	400
	High	79	95	117	136	161	184	200	218	238	234	259	291	313	340	366	399	427	449	480	485
– Setting																					
Cooling Speed	Low	19	28	42	55	69	84	98	115	130	34	55	76	94	117	132	152	167	185	203	223
	Med-low	27	41	60	74	89	106	124	144	162	73	87	108	134	159	176	196	209	238	251	273
	Med-High	32	45	70	92	107	127	146	163	178	102	128	153	173	202	223	250	275	293	313	335
	High	59	70	87	112	134	150	170	189	203	161	188	212	242	266	283	313	347	367	395	409

BLOWER DATA

SL297UH060NV36B BLOWER PERFORMANCE (less filter)
SINGLE SIDE RETURN AIR WITH OPTIONAL RETURN AIR BASE
0 through 0.8 in. w.g. (Heating) and 0 through 1.0 in. w.g. (Cooling) External Static Pressure Range

HEATING		
[1] Heating Speed DIP Switch Settings	First Stage Heating Speed - cfm	Second Stage Heating Speed - cfm
+24%	1098	1229
+18%	1039	1168
+12%	992	1104
+6%	930	1051
Factory Default	885	996
–6%	822	937
–12%	773	878
–18%	717	817

COOLING								
[1] Cooling Speed DIP Switch Settings	First Stage Cooling Speed - cfm				Second Stage Cooling Speed - cfm			
	Low	Medium-Low	Medium-High	[2] High	Low	Medium-Low	Medium-High	[2] High
+	578	746	847	957	889	1042	1197	1364
Factory Default	556	665	764	864	799	949	1093	1249
–	485	593	706	783	721	845	988	1122

[1] Cooling and heating speeds are based on a combination of DIP switch settings on the furnace control. Refer to Installation Instructions for specific DIP Switch Settings.
[2] Factory default setting.

NOTES - The effect of static pressure is included in air volumes shown.
First stage HEAT is approximately 91% of the same second stage HEAT.
First stage COOL (two-stage air conditioning units only) is approximately 70% of the same second stage COOL speed position.
Continuous Fan Only speed is selectable at 28% and 38% of the selected second stage cooling speed - minimum 250 cfm.
Lennox® Smart Zoning System Applications - Minimum blower speed is 250 cfm.

SL297UH060NV36B BLOWER MOTOR WATTS (COOLING)

[1] Cooling Speed DIP Switch Settings		Motor Watts @ Various External Static Pressures - in. wg.																			
		First Stage									Second Stage										
		0	0.1	0.2	0.3	0.4	0.5	0.6	0.7	0.8	0	0.1	0.2	0.3	0.4	0.5	0.6	0.7	0.8	0.9	1.0
+ Setting																					
Cooling Speed	Low	32	44	59	70	94	109	128	143	167	70	82	105	127	149	170	195	215	237	256	274
	Med-low	43	59	80	103	115	140	160	174	195	111	134	160	181	206	230	252	278	301	325	353
	Med-High	61	73	100	125	145	168	185	208	222	170	193	222	246	273	301	328	355	384	407	439
	High	89	114	138	160	181	203	227	248	263	262	291	315	349	373	401	430	461	490	517	535
Factory Default																					
Cooling Speed	Low	22	32	47	62	78	93	111	123	142	58	70	88	106	132	148	168	189	209	230	247
	Med-low	30	40	57	80	99	117	135	155	169	99	108	123	147	172	191	220	239	256	282	305
	Med-High	44	58	77	99	120	141	158	177	202	135	151	177	202	224	251	278	299	319	348	375
	High	62	88	101	123	145	168	192	210	230	207	224	251	282	302	327	361	384	409	435	461
– Setting																					
Cooling Speed	Low	20	28	44	59	69	86	98	114	132	33	45	68	89	109	129	145	165	183	202	218
	Med-low	31	44	60	76	94	112	127	144	157	69	81	100	121	141	164	185	207	227	247	265
	Med-High	48	57	73	95	107	127	146	167	186	99	113	136	162	184	207	233	251	279	300	322
	High	52	65	97	118	132	151	175	189	209	132	164	189	213	243	266	289	318	339	367	385

BLOWER DATA

SL297UH080NV48C BLOWER PERFORMANCE (less filter)

BOTTOM RETURN AIR

0 through 0.8 in. w.g. (Heating) and 0 through 1.0 in. w.g. (Cooling) External Static Pressure Range

HEATING		
[1] Heating Speed DIP Switch Settings	First Stage Heating Speed - cfm	Second Stage Heating Speed - cfm
+24%	1499	1640
+18%	1427	1546
+12%	1361	1472
+6%	1294	1399
Factory Default	1219	1315
–6%	1176	1242
–12%	1090	1173
–18%	1007	1077

COOLING								
[1] Cooling Speed DIP Switch Settings	First Stage Cooling Speed - cfm				Second Stage Cooling Speed - cfm			
	Low	Medium-Low	Medium-High	[2] High	Low	Medium-Low	Medium-High	[2] High
+	797	954	1071	1241	1102	1304	1508	1713
Factory Default	713	873	969	1147	1006	1186	1392	1588
–	623	767	880	1025	911	1068	1252	1422

[1] Cooling and heating speeds are based on a combination of DIP switch settings on the furnace control. Refer to Installation Instructions for specific DIP Switch Settings.

[2] Factory default setting.

NOTES - The effect of static pressure is included in air volumes shown.
First stage HEAT is approximately 91% of the same second stage HEAT.
First stage COOL (two-stage air conditioning units only) is approximately 70% of the same second stage COOL speed position.
Continuous Fan Only speed is selectable at 28% and 38% of the selected second stage cooling speed - minimum 380 cfm.
Lennox® Smart Zoning System Applications - Minimum blower speed is 380 cfm.

SL297UH080NV48C BLOWER MOTOR WATTS (COOLING)

[1] Cooling Speed DIP Switch Settings		Motor Watts @ Various External Static Pressures - in. wg.																			
		First Stage									Second Stage										
		0	0.1	0.2	0.3	0.4	0.5	0.6	0.7	0.8	0	0.1	0.2	0.3	0.4	0.5	0.6	0.7	0.8	0.9	1.0
+ Setting																					
Cooling Speed	Low	45	57	78	103	121	145	167	184	205	97	116	144	167	200	228	255	276	302	325	352
	Med-low	70	83	107	132	155	184	208	228	253	160	174	202	233	265	296	328	357	382	414	443
	Med-High	88	105	135	160	191	215	241	268	297	226	251	286	323	358	387	423	461	494	527	554
	High	133	154	179	209	240	271	299	327	357	321	357	397	434	474	505	547	587	630	668	711
Factory Default																					
Cooling Speed	Low	28	43	65	92	114	134	153	174	192	77	97	129	152	178	203	224	255	279	298	325
	Med-low	46	69	94	117	138	161	187	210	230	123	148	179	205	236	267	289	318	348	367	399
	Med-High	70	88	116	140	165	192	211	242	260	182	204	242	266	297	336	363	396	430	450	481
	High	106	129	156	184	213	243	264	288	313	275	305	344	377	408	443	478	519	550	585	612
– Setting																					
Cooling Speed	Low	25	41	58	78	95	113	126	144	165	62	75	97	128	151	172	197	213	235	263	281
	Med-low	44	57	74	98	122	141	162	185	204	83	109	137	162	194	215	242	271	291	318	335
	Med-High	58	71	95	121	143	168	195	214	233	141	162	190	222	255	288	313	341	360	401	423
	High	72	94	122	149	173	201	225	249	274	200	223	258	290	324	358	387	426	453	477	506

BLOWER DATA

SL297UH080NV48C BLOWER PERFORMANCE (less filter)

SINGLE SIDE RETURN AIR

0 through 0.8 in. w.g. (Heating) and 0 through 1.0 in. w.g. (Cooling) External Static Pressure Range

HEATING		
[1] Heating Speed DIP Switch Settings	First Stage Heating Speed - cfm	Second Stage Heating Speed - cfm
+24%	1433	1542
+18%	1353	1480
+12%	1275	1398
+6%	1229	1334
Factory Default	1154	1253
–6%	1093	1181
–12%	1024	1107
–18%	958	1054

COOLING								
[1] Cooling Speed DIP Switch Settings	First Stage Cooling Speed - cfm				Second Stage Cooling Speed - cfm			
	Low	Medium-Low	Medium-High	[2] High	Low	Medium-Low	Medium-High	[2] High
+	792	959	1118	1264	1104	1302	1530	1730
Factory Default	844	876	1008	1162	1001	1202	1397	1612
–	643	771	908	1055	915	1090	1253	1443

[1] Cooling and heating speeds are based on a combination of DIP switch settings on the furnace control. Refer to Installation Instructions for specific DIP Switch Settings.

[2] Factory default setting.

NOTES - The effect of static pressure is included in air volumes shown.
First stage HEAT is approximately 91% of the same second stage HEAT.
First stage COOL (two-stage air conditioning units only) is approximately 70% of the same second stage COOL speed position.
Continuous Fan Only speed is selectable at 28% and 38% of the selected second stage cooling speed - minimum 380 cfm.
Lennox® Smart Zoning System Applications - Minimum blower speed is 380 cfm.

SL297UH080NV48C BLOWER MOTOR WATTS (COOLING)

[1] Cooling Speed DIP Switch Settings		Motor Watts @ Various External Static Pressures - in. wg.																			
		First Stage									Second Stage										
		0	0.1	0.2	0.3	0.4	0.5	0.6	0.7	0.8	0	0.1	0.2	0.3	0.4	0.5	0.6	0.7	0.8	0.9	1.0
+ Setting																					
Cooling Speed	Low	50	64	92	116	135	155	184	202	216	123	156	180	207	237	266	289	316	344	371	392
	Med-low	88	106	128	153	178	201	231	254	272	206	225	258	290	318	351	379	416	445	474	498
	Med-High	119	139	171	196	221	251	276	305	326	304	330	369	407	446	482	511	540	588	615	653
	High	183	201	231	260	287	320	349	379	409	423	464	503	544	587	631	661	703	736	781	783
Factory Default																					
Cooling Speed	Low	62	74	105	126	151	170	197	216	238	91	118	143	167	196	220	247	271	295	318	341
	Med-low	68	79	102	127	150	175	201	220	244	146	178	213	241	268	292	323	360	384	409	433
	Med-High	88	108	137	160	188	217	242	261	288	234	259	295	329	364	394	424	458	490	518	558
	High	129	157	184	214	239	265	295	317	349	333	368	407	448	493	529	561	598	631	668	704
– Setting																					
Cooling Speed	Low	42	58	72	90	111	128	146	168	180	75	95	116	141	166	190	215	237	260	280	304
	Med-low	52	70	88	113	140	162	182	203	221	121	139	164	194	219	245	275	303	326	353	379
	Med-High	73	95	116	143	172	190	215	237	259	169	191	228	259	288	320	345	377	408	434	467
	High	101	119	146	172	199	222	249	276	300	239	267	309	350	379	421	441	474	509	545	575

BLOWER DATA

SL297UH080NV48C BLOWER PERFORMANCE (less filter)

SINGLE SIDE RETURN AIR WITH OPTIONAL RETURN AIR BASE

0 through 0.8 in. w.g. (Heating) and 0 through 1.0 in. w.g. (Cooling) External Static Pressure Range

HEATING		
[1] Heating Speed DIP Switch Settings	First Stage Heating Speed - cfm	Second Stage Heating Speed - cfm
+24%	1407	1528
+18%	1342	1461
+12%	1283	1388
+6%	1217	1304
Factory Default	1152	1237
–6%	1080	1150
–12%	1015	1114
–18%	953	1038

COOLING								
[1] Cooling Speed DIP Switch Settings	First Stage Cooling Speed - cfm				Second Stage Cooling Speed - cfm			
	Low	Medium-Low	Medium-High	[2] High	Low	Medium-Low	Medium-High	[2] High
+	831	969	1103	1269	1096	1323	1541	1731
Factory Default	753	905	1008	1150	1005	1208	1385	1605
–	806	807	932	1045	920	1102	1269	1451

[1] Cooling and heating speeds are based on a combination of DIP switch settings on the furnace control. Refer to Installation Instructions for specific DIP Switch Settings.

[2] Factory default setting.

NOTES - The effect of static pressure is included in air volumes shown.
First stage HEAT is approximately 91% of the same second stage HEAT.
First stage COOL (two-stage air conditioning units only) is approximately 70% of the same second stage COOL speed position.
Continuous Fan Only speed is selectable at 28% and 38% of the selected second stage cooling speed - minimum 250 cfm.
Lennox® Smart Zoning System Applications - Minimum blower speed is 380 cfm.

SL297UH080NV48C BLOWER MOTOR WATTS (COOLING)

[1] Cooling Speed DIP Switch Settings		Motor Watts @ Various External Static Pressures - in. wg.																			
		First Stage									Second Stage										
		0	0.1	0.2	0.3	0.4	0.5	0.6	0.7	0.8	0	0.1	0.2	0.3	0.4	0.5	0.6	0.7	0.8	0.9	1.0
+ Setting																					
Cooling Speed	Low	45	62	89	112	135	156	176	200	220	103	135	164	190	212	247	270	298	325	350	376
	Med-low	77	90	116	144	171	194	217	240	264	191	207	239	275	311	337	368	394	429	461	484
	Med-High	116	129	154	181	208	235	263	289	314	285	303	343	377	416	454	489	523	556	585	621
	High	153	177	204	238	264	297	329	356	387	399	430	468	508	554	589	639	677	709	752	779
Factory Default																					
Cooling Speed	Low	41	54	78	103	121	143	163	185	207	102	113	132	156	184	211	240	259	286	313	334
	Med-low	56	78	106	132	151	177	201	221	244	134	164	191	224	253	282	312	340	368	397	425
	Med-High	91	106	135	163	185	211	235	260	284	219	242	272	305	341	379	407	435	462	498	529
	High	131	150	176	206	234	262	288	316	341	305	338	377	419	454	493	531	565	603	629	664
– Setting																					
Cooling Speed	Low	49	63	86	106	130	156	175	194	217	68	84	111	135	160	186	210	230	254	280	298
	Med-low	35	56	82	104	131	151	170	191	212	112	133	161	189	215	240	267	296	318	347	370
	Med-High	66	77	109	132	153	178	201	226	250	164	187	221	249	284	309	333	368	396	428	456
	High	101	112	138	165	192	215	243	268	293	223	256	298	327	365	402	434	469	500	526	565

BLOWER DATA

SL297UH080NV60C BLOWER PERFORMANCE (less filter)

BOTTOM RETURN AIR

0 through 0.8 in. w.g. (Heating) and 0 through 1.0 in. w.g. (Cooling) External Static Pressure Range

HEATING		
[1] Heating Speed DIP Switch Settings	First Stage Heating Speed - cfm	Second Stage Heating Speed - cfm
+24%	1477	2011
+18%	1403	1883
+12%	1323	1782
+6%	1249	1697
Factory Default	1178	1578
–6%	1103	1477
–12%	1033	1388
–18%	965	1291

COOLING								
[1] Cooling Speed DIP Switch Settings	First Stage Cooling Speed - cfm				Second Stage Cooling Speed - cfm			
	Low	Medium-Low	Medium-High	[2] High	Low	Medium-Low	Medium-High	[2] High
+	1094	1253	1388	1580	1584	1825	2065	2286
Factory Default	984	1155	1284	1445	1454	1659	1881	2092
–	868	1021	1152	1302	1301	1490	1693	1890

[1] Cooling and heating speeds are based on a combination of DIP switch settings on the furnace control. Refer to Installation Instructions for specific DIP Switch Settings.

[2] Factory default setting.

NOTES - The effect of static pressure is included in air volumes shown.
First stage HEAT is approximately 91% of the same second stage HEAT.
First stage COOL (two-stage air conditioning units only) is approximately 70% of the same second stage COOL speed position.
Continuous Fan Only speed is selectable at 28% and 38% of the selected second stage cooling speed - minimum 450 cfm.
Lennox® Smart Zoning System Applications - Minimum blower speed is 450 cfm.

SL297UH080NV60C BLOWER MOTOR WATTS (COOLING)

[1] Cooling Speed DIP Switch Settings		Motor Watts @ Various External Static Pressures - in. wg.																			
		First Stage									Second Stage										
		0	0.1	0.2	0.3	0.4	0.5	0.6	0.7	0.8	0	0.1	0.2	0.3	0.4	0.5	0.6	0.7	0.8	0.9	1.0
+ Setting																					
Cooling Speed	Low	91	110	140	169	202	226	252	277	305	244	279	315	358	393	431	472	515	552	584	613
	Med-low	131	153	184	218	254	281	312	337	367	394	426	469	511	561	586	639	677	737	768	824
	Med-High	182	202	232	267	304	341	378	412	442	523	588	636	693	756	793	843	903	947	995	1040
	High	243	270	316	355	393	426	473	511	549	800	848	894	949	1007	1052	1061	1057	1057	1047	1046
Factory Default																					
Cooling Speed	Low	70	85	115	143	166	196	219	245	270	186	219	256	286	325	361	398	435	460	495	523
	Med-low	112	128	152	180	215	240	267	299	323	271	308	353	382	431	474	515	558	604	639	671
	Med-High	132	159	189	224	259	291	317	348	378	402	442	482	543	584	623	677	717	760	813	868
	High	189	213	253	291	327	366	403	429	470	600	633	678	729	776	825	880	923	973	1015	1046
– Setting																					
Cooling Speed	Low	61	79	99	115	141	169	196	214	242	155	181	213	243	272	312	338	371	395	423	460
	Med-low	83	102	132	155	183	208	237	262	291	215	241	270	307	345	383	424	461	488	520	559
	Med-High	111	131	158	191	222	245	278	302	336	299	332	374	409	447	493	526	576	614	654	692
	High	146	175	203	237	271	310	336	365	390	423	468	506	545	603	635	681	734	775	821	866

BLOWER DATA

SL297UH080NV60C BLOWER PERFORMANCE (less filter)

SINGLE SIDE RETURN AIR - Air volumes in **bold** require Optional Return Air Base and field fabricated transition to accommodate 20 x 25 x 1 in. cleanable air filter in order to maintain proper air velocity across the filter.

0 through 0.8 in. w.g. (Heating) and 0 through 1.0 in. w.g. (Cooling) External Static Pressure Range

HEATING		
[1] Heating Speed DIP Switch Settings	First Stage Heating Speed - cfm	Second Stage Heating Speed - cfm
+24%	1446	**1952**
+18%	1374	**1853**
+12%	1304	1745
+6%	1218	1668
Factory Default	1161	1558
–6%	1096	1466
–12%	1015	1380
–18%	953	1278

COOLING								
[1] Cooling Speed DIP Switch Settings	First Stage Cooling Speed - cfm				Second Stage Cooling Speed - cfm			
	Low	Medium-Low	Medium-High	[2] High	Low	Medium-Low	Medium-High	[2] High
+	1094	1279	1430	1609	1599	1823	**2051**	**2239**
Factory Default	1003	1160	1308	1454	1438	1649	1863	**2097**
–	894	1044	1166	1309	1301	1490	1683	1897

[1] Cooling and heating speeds are based on a combination of DIP switch settings on the furnace control. Refer to Installation Instructions for specific DIP Switch Settings.
[2] Factory default setting.

NOTES - The effect of static pressure is included in air volumes shown.
First stage HEAT is approximately 91% of the same second stage HEAT.
First stage COOL (two-stage air conditioning units only) is approximately 70% of the same second stage COOL speed position.
Continuous Fan Only speed is selectable at 28% and 38% of the selected second stage cooling speed - minimum 450 cfm.
Lennox® Smart Zoning System Applications - Minimum blower speed is 450 cfm.

SL297UH080NV60C BLOWER MOTOR WATTS (COOLING)

[1] Cooling Speed DIP Switch Settings		Motor Watts @ Various External Static Pressures - in. wg.																			
		First Stage									Second Stage										
		0	0.1	0.2	0.3	0.4	0.5	0.6	0.7	0.8	0	0.1	0.2	0.3	0.4	0.5	0.6	0.7	0.8	0.9	1.0
+ Setting																					
Cooling Speed	Low	77	106	146	182	206	233	266	294	327	241	286	338	374	416	467	504	546	583	622	657
	Med-low	126	163	194	230	273	301	333	369	399	394	430	488	532	577	631	669	726	775	814	851
	Med-High	189	213	257	291	334	367	412	439	471	582	627	669	726	776	843	900	950	1005	1034	1035
	High	271	300	341	382	431	475	519	558	594	812	871	941	991	1049	1054	1044	1040	1034	1026	1022
Factory Default																					
Cooling Speed	Low	62	86	120	151	178	207	234	262	295	201	229	264	304	343	389	419	458	488	519	561
	Med-low	103	132	160	199	226	258	293	322	350	289	327	374	420	466	509	561	603	633	667	716
	Med-High	146	172	208	251	287	314	346	382	408	442	481	526	578	628	687	719	776	832	863	908
	High	196	223	269	305	349	386	420	452	491	612	663	721	792	843	908	957	1002	1038	1055	1047
– Setting																					
Cooling Speed	Low	55	77	102	121	148	175	200	229	258	143	170	212	245	285	309	345	381	416	450	477
	Med-low	71	99	129	159	189	219	249	275	303	206	245	286	330	377	414	453	483	516	551	591
	Med-High	91	122	160	193	227	259	286	318	350	299	347	400	442	485	532	573	624	659	692	728
	High	135	165	205	245	285	317	345	381	412	435	488	538	596	643	688	743	799	838	881	919

REVISIONS

Sections	Description of Change
Dimensions	Updated Furnace/Coil Combined Dimension data for new CK40 coils.
Override Accessories	Added Refrigerant Detection System (RDS) Components.

Visit us at www.Lennox.com
For the latest technical information, www.LennoxPros.com
Contact us at 1-800-9-LENNOX

NOTE - Due to Lennox' ongoing commitment to quality, Specifications, Ratings and Dimensions subject to change without notice and without incurring liability.
Improper installation, adjustment, alteration, service or maintenance can cause property damage or personal injury.
Installation and service must be performed by a qualified installer and servicing agency.

©2024 Lennox Industries, Inc.