# LCM

## MODEL L™ ROOFTOP UNITS

**Ultra-High Efficiency | Lennox® CORE Controller | Environ™ Coil | R-454B | 60Hz**

**COMMERCIAL**
**PRODUCT SPECIFICATIONS (EHB)**

**3 to 6 Tons**
**Net Cooling Capacity - 35,000 to 69,000 Btuh**
**Optional Electric Heat - 7.5 to 30 kW**

MODEL /L

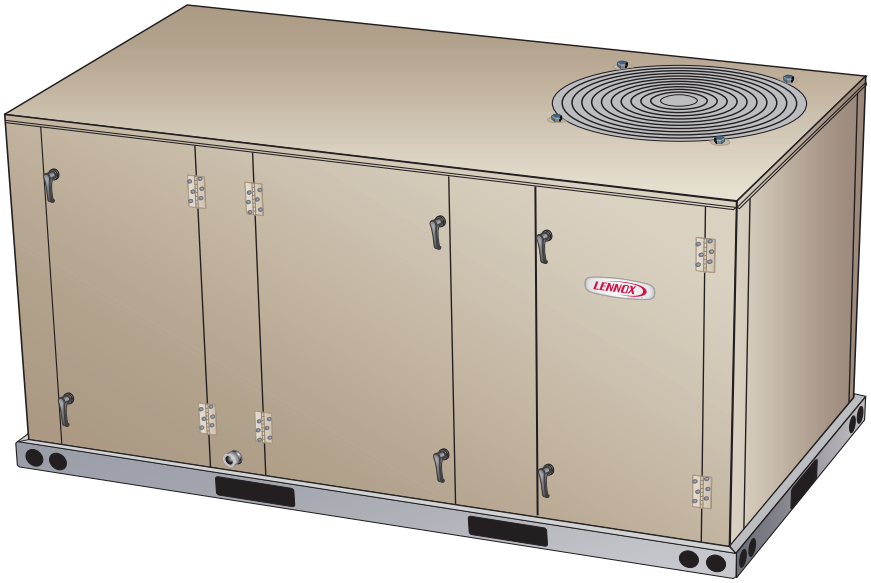

## MODEL NUMBER IDENTIFICATION

**L C M 060 U 5 E N 1 Y**

**Brand**
L = Lennox®

**Unit Type**
C = Packaged Electric Cooling w/ optional Electric Heat

**Family**
M = Model L™ Series

**Nominal Cooling Capacity - Tons**
036 = 3 Tons
048 = 4 Tons
060 = 5 Tons
074 = 6 Tons

**Cooling Efficiency**
U = Ultra-High Efficiency

**Refrigerant Type**
5 = R-454B

**Voltage**
Y = 208/230V-3 phase-60Hz
G = 460V-3 phase-60Hz
J = 575V-3 phase-60Hz

**Minor Design Sequence**
1 = 1st Revision

**Factory Installed Electric Heat**
N = No Heat
C = 7.5 kW Electric Heat
E = 15 kW Electric Heat
G = 22.5 kW Electric Heat
J = 30 kW Electric Heat

**Blower Type**
E = SZVAV DirectPlus™ Blower System (Direct Drive)
P = VAV DirectPlus™ Blower System (Direct Drive)

Form Number 211131 | April 2025
Supersedes all previous versions

## FEATURE HIGHLIGHTS

The Model L™ packaged rooftop line is engineered with advanced variable speed technology to offer some of the highest energy efficiencies in the industry while delivering superior temperature and humidity control in a wide variety of commercial applications.

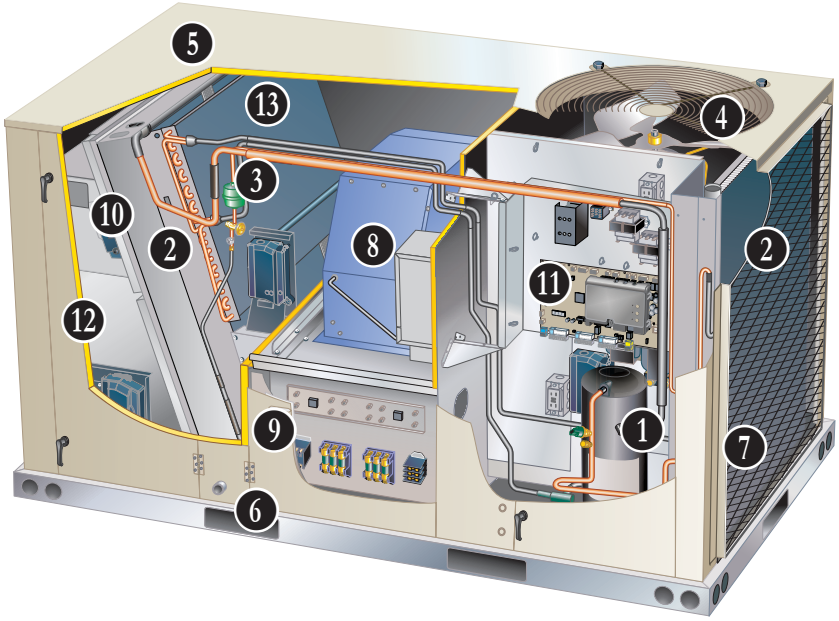


1. Variable Capacity Scroll Compressor
2. Environ™ Coil System
3. Filter/Drier
4. Variable-Speed ECM Outdoor Fan
5. Heavy Gauge Steel Cabinet
6. Hinged Access Panels
7. Combination Coil/Hail Guards (option)
8. DirectPlus™ Direct Drive ECM Blower System
9. Electric Heat (option)
10. Air Filters
11. Lennox® CORE Control System
12. Economizer (option)
13. Humiditrol®+ Dehumidification System (option)

## CONTENTS


Approvals And Warranty . . . 3
Blower Data . . . 28
Control System . . . 8
Cooling Ratings . . . 22
Dimensions . . . 38
- Accessories . . . 39
- Unit . . . 38
Electrical/Electric Heat Data . . . 32
- 3 Ton . . . 32
- 4 Ton . . . 33
- 5 Ton . . . 34
- 6 Ton . . . 35
Electric Heat Capacities . . . 36
Feature Highlights . . . 2
Features And Benefits . . . 3
Humiditrol™+ Dehumidification System Option . . . 12
Humiditrol™+ System Ratings . . . 26
Model Number Identification. . . . 1
Optional Conventional Temperature Control Systems . . . 13
Options / Accessories . . . 18
Outdoor Sound Data . . . 37
Sequence Of Operation . . . 15
Specifications . . . 21
Unit Clearances . . . 36
Weight Data . . . 37
- Unit . . . 37

## APPROVALS AND WARRANTY

### APPROVALS

- AHRI Certified to AHRI Standard 210/240-2023 (3 thru 5 ton models) and AHRI Standard 340/360-2023 (6 ton models)
- ETL and CSA listed
- Unit and components ETL, NEC and CEC bonded for grounding to meet safety standards for servicing
- All models are ASHRAE 90.1 compliant
- All models meet DOE 2023 energy efficiency standards and UL 60335-2-40 Refrigerant Detector Requirements
- All models have HCAI (formerly OSHPD) OSP and Special Seismic Certification (Number: OSP-0596), and meet 2021 International Building Code (IBC), 2022 California Building Code (CBC) ASCE 7, and ICC-ES AC156
- ENERGY STAR® certified units are designed to use less energy, help save money on utility bills, and help protect the environment
- ISO 9001 Registered Manufacturing Quality System

### WARRANTY

- Compressor - Limited five years
- Environ™ Coil System - Limited three years
- Lennox® CORE Unit Controller - Limited three years
- High Performance Economizer (optional) - Limited five years
- All other covered components - Limited one year

## FEATURES AND BENEFITS

### COOLING SYSTEM

- Designed to maximize sensible and latent cooling performance at design conditions
- System can operate from 0°F to 125°F without any additional controls

R-454B Refrigerant

- Low GWP (Global Warming Potential)
- Zero ODP (Ozone Depletion Potential)
- Low Toxicity/Lower Flammability - A2L
- Unit is factory pre-charged

1 Variable Capacity Scroll Compressor

- Operates on a variable frequency
- DC Inverter Control varies the capacity based on the cooling load required
- High volumetric efficiency
- Uniform suction flow
- Constant discharge flow
- "Soft Start" feature slowly ramps up system from low to high speed
- Quiet operation

Compressor Operation

- Two involute spiral scrolls matched together to generate a series of crescent shaped gas pockets between them
- During compression, one scroll remains stationary while the other scroll orbits around it
- Gas is drawn into the outer pocket, the pocket is sealed as the scroll rotates
- As the spiral movement continues, gas pockets are pushed to the center of the scrolls
- Volume between the pockets is simultaneously reduced
- When the pocket reaches the center, gas is now at high pressure and is forced out of a port located in the center of the fixed scrolls
- During compression, several pockets are compressed simultaneously resulting in a smooth continuous compression cycle
- Continuous flank contact, maintained by centrifugal force, minimizes gas leakage and maximizes efficiency
- Compressor is tolerant to the effects of slugging and contaminants
- If this occurs, scrolls separate, allowing liquid or contaminants to be worked toward the center and discharged

Top Cap Thermal Sensor Switch

- Located on top of the compressor casing
- Discontinues compressor operation in case of abnormal operating conditions

Compressor Crankcase Heater

- Protects against refrigerant migration that can occur during low ambient operation or during extended off cycles

DC Inverter Control

- Converts AC line voltage into filtered variable DC voltage
- Provides continuous compressor operation, while adjusting the capacity according to discharge air temperature
- Adjusts compressor output in increments as small as 1%
- Prevents frequent changes in capacity and ensures efficient, economical operation
- Power Factor Correction (PFC) circuit monitors the DC bus for high, low and abnormal voltage conditions to protect the compressor
- Two LEDS (red and green) indicate inverter operating status and aid in troubleshooting

**COOLING SYSTEM (continued)**

- Noise filter reduces unwanted electromagnetic interference (EMI)
- Inverter reactor adds inductance to the line between the inverter and the compressor to limit current rise and protect the compressor

2 Environ™ Coil System

- Condenser and evaporator coil
- Coils features lightweight, all aluminum brazed fin construction
- Constructed of three components:
  - A flat extrusion tube
  - Fins in-between the flat extrusion tube
  - Two refrigerant manifolds

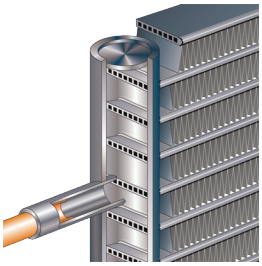

Environ™ Coil System Features:

- Improved heat transfer performance due to high primary surface area (flat tubes) versus secondary surface (fins)
- Smaller internal volume (reduced refrigerant charge)
- High durability
- All aluminum construction
- Fewer brazed joints
- Compact design
- Reduced unit weight
- Easy maintenance/cleaning
- Condenser coil has mounting brackets with rubber inserts which secures coil to unit providing vibration dampening and corrosion protection
- Hydrophilic fin surfaces on evaporator coil repel water and direct condensation down the surface into drain pan

Thermal Expansion Valve

- Ensures optimal performance throughout the application range
- Removable element head

3 Filter/Drier

- High capacity filter/drier protects the system from dirt and moisture

High Pressure Switch

- Protects the compressor from overload conditions such as dirty condenser coils, blocked refrigerant flow or loss of outdoor fan operation

Low Pressure Switch

- Protects the compressor from low pressure conditions such as low refrigerant charge or low/no airflow

Indoor Coil Freeze Protection

- Protects the evaporator coil from damaging ice build-up due to conditions such as low/no airflow or low refrigerant charge

Anti-Microbial Condensate Drain Pan

- Plastic pan, sloped to meet drainage requirements of ASHRAE 62.1
- Anti-Microbial additive resists growth of mold and mildew on drain pan, which improves indoor air quality and reduces drain line blockage
- Side or bottom drain connections
- Reversible to allow connection at back of unit

4 Variable-Speed ECM Outdoor Fan Motor

- Fan speed is directly controlled by the Lennox® CORE Unit Controller
- Thermal overload protected
- Totally enclosed
- Permanently lubricated ball bearings
- Shaft up
- Wire basket mount

Outdoor Coil Fan

- PVC coated fan guard furnished

## Required Selections

Cooling Capacity

- Specify nominal cooling capacity

## Options/Accessories

**Factory or Field Installed**

Condensate Drain Trap

- Constructed of PVC (factory or field) or copper (field only)

**NOTE** - Trap is field installed only; PVC version may be factory ordered to ship with unit.

Drain Pan Overflow Switch

- Monitors condensate level in drain pan
- Shuts down unit if drain becomes clogged

**LOW GWP REFRIGERANT DETECTION SYSTEM (RDS)**

- Complies with UL 60335-2-40 approved standard
- Required for all systems using R-454B refrigerant
- Factory installed on all units
- Consists of a refrigerant detection sensor(s) and a mitigation control
- Ensures safe operation for systems equipped with R-454B refrigerant
- Sensor(s) monitors indoor coil area for R-454B refrigerant
- If R-454B refrigerant is detected the refrigerant detection system will prevent compressor and heating operation until R-454B refrigerant is no longer detected
- Refrigeration detection system energizes blower if any R-454B refrigerant is detected to mitigate any concentrations of refrigerant from the unit and the system

## FEATURES AND BENEFITS

### CABINET

5 Construction
- Heavy-gauge steel panels
- Full perimeter heavy-gauge galvanized steel base rail
- Base rails have rigging holes
- Three sides of the base rail have forklift slots
- Raised edges around duct and power entry openings in the bottom of the unit for water protection

Airflow Choice
- Units are shipped in downflow (vertical) configuration

**NOTE** - Can be field converted to horizontal airflow configuration without any optional kits.

Duct Flanges
- Provided for horizontal duct attachment

Power Entry
- Electrical lines can be routed through the unit base or through horizontal access knock-outs

Exterior Panels
- Constructed of heavy-gauge, galvanized steel
- Textured pre-paint with polyurethane finish
- Cyclic salt fog and UV exposure up to 1,680 hours per ASTM D5894

Insulation
- Fully insulated with non-hygroscopic fiberglass insulation (conditioned areas)
- Unit base is fully insulated
- Base insulation serves as an air seal to the roof curb, eliminating the need to add a seal during installation

6 Hinged Access Panels
- Tool-less access
- Economizer/ Filter sections
- Blower/heating section
- Compressor/controls sections
- Panel seals and quarter-turn latching handles provide a tight air and water seal

**NOTE** - Optional Economizers, Power Exhaust, Outdoor Air Dampers and Barometric Relief Dampers include a filler panel for proper cabinet fit.

### Required Selections

Airflow Configuration
- Specify horizontal or downflow

### Options/Accessories

**Factory Installed**

Corrosion Protection
- Completely flexible immersed coating
- Electrodeposited dry film process (AST ElectroFin E-Coat)
- ASTM B117 / DIN 53167 Salt Spray - 15,000+ hours
- ASTM G85 Annex A3 SWAAT Modified Salt Spray - 3000 hours
- VA Master Construction Specification Division 23 for High Humidity Installations
- CID AA-52474A (GSA)
- Indoor Corrosion Protection:
  - Coated coil
  - Coated reheat coil (Humiditrol®+)
  - Painted blower housing
  - Painted indoor base
- Outdoor Corrosion Protection:
  - Coated coil
  - Painted outdoor base

**Factory or Field Installed**

7 Combination Coil/Hail Guards
- Heavy gauge steel frame
- Painted to match cabinet
- Expanded metal mesh protects outdoor coil

## FEATURES AND BENEFITS

### BLOWER

8 DirectPlus™ Direct Drive ECM Blower System

- High-efficiency, variable-speed ECM (electronically commutated) motor
- Eliminates the need for a separate variable-frequency drive
- Advanced Blower Diagnostics: Lennox® CORE Unit Controller communicates via Modbus with DirectPlus™ blower to provide control commands, blower proving functionality, and detailed alarm codes
- SZVAV equipped models modulate the amount of supply blower airflow according to cooling demand, heating demand, ventilation demand or smoke alarm
- The amount of airflow for each stage can be set according to a parameter in the Lennox® CORE Unit Controller
- Unit is shipped from the factory with preset airflows
- Fully variable speed motor modulates to maximize system efficiency
- Combines the motor and electronics into one unit
- Aerodynamically optimized impeller
- Backward curved blades mounted directly onto the rotor

- Air inlet grill reduces indoor sound levels without affecting air performance

Supply Static Pressure Transducer (VAV Models Only)
- Sends information to the Lennox® CORE Unit Controller to control blower speed to the desired supply duct static pressure
- Shipped with the unit for remote field installation in the supply duct

Required Selections

Blower Selection
- SZVAV (Single Zone Variable Air Volume) controls the speed of the blower based on the cooling and heating demands
- VAV (Variable Air Volume) blower varies the air volume to maintain a constant supply duct static pressure

### ELECTRICAL

SmartWire™ System
- Advanced wiring connectors are keyed and color-coded to prevent miswiring
- Wire coloring scheme is standardized across all models
- Each connection is intuitively labeled to make troubleshooting and servicing quick and easy

Electrical Plugs
- Positive connection electrical plugs are used to connect common accessories or maintenance parts for easy removal or installation

Required Selections

Voltage Choice
- Specify when ordering base unit

Options/Accessories

**Factory Installed**

Circuit Breakers
- HACR type
- For overload and short circuit protection
- Factory wired and mounted in the power entry panel
- Current sensitive and temperature activated
- Manual reset

Phase/Voltage Detection (3 Phase models only)
- Monitors power supply to assure phase is correct at unit start-up
- If phase is incorrect, the unit will not start and an alarm code is reported to the unit controller
- Protects unit from being started with incorrect phasing which could lead to issues such as compressors running backwards
- Voltage detection monitors power supply voltage to assure proper voltage
- If voltage is not correct (over/under voltage conditions) the unit will not start and an alarm code is reported to the unit controller

Short-Circuit Current Rating (SCCR)
- Higher short circuit protection up to 100kA

**NOTE** - Disconnect Switch is not available as an option with High SCCR option.

**ELECTRICAL (Continued)**

**Factory or Field Installed**

Disconnect Switch
- Accessible from outside of unit
- Spring loaded weatherproof cover furnished

9 Electric Heat
- Helix wound nichrome elements
- Individual element limit controls
- Wiring harness
- Unit fuse block
- See Options / Accessories tables for ordering information

GFI Service Outlets (2)
- 115V ground fault circuit interrupter (GFCI) type options
  - Factory installed, non-powered, field wired
  - Field installed, non-powered, field wired

**Field Installed**

GFI Weatherproof Cover
- Single-gang cover
- Heavy-duty UV-resistant polycarbonate case construction
- Hinged base cover with gasket

**INDOOR AIR QUALITY**

10 Air Filters
- Disposable 2 inch MERV 4 filters furnished as standard

Options/Accessories

**Factory or Field Installed**

Healthy Climate® High Efficiency Air Filters
- Disposable MERV 8, MERV 13, or MERV 16 (Minimum Efficiency Reporting Value based on ASHRAE 52.2) efficiency 2-inch pleated filters

**Field Installed**

Healthy Climate® UVC Germicidal Lamps

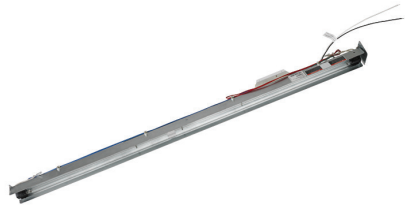

- Germicidal lamps emit ultra-violet (UV-C) energy, which has been proven to be effective in reducing microbes such as viruses, bacteria, yeasts, and molds
- This process either destroys the organism or controls its ability to reproduce
- UV-C energy greatly reduces the growth and proliferation of mold and other bioaerosols (bacteria and viruses) on illuminated surfaces (particularly coil and drain pan)
- Installed in the blower/evaporator coil section
- Safety interlock switch automatically shuts off power to the UVC light when panel is removed
- Interlock switch is factory installed or field installed in the blower/evaporator coil section panel
- All necessary hardware for installation is included
- Lamps operate on 110/230V, 1 phase power supply
- Approved by ETL

**NOTE** - Step-down transformer may be ordered for field installed UVC lamps when used with 460V and 575V rooftop units. Step-down transformer is furnished with lamps when factory installed.

Needlepoint Bipolar Ionization (NPBI) Kit
- NPBI technology integrates with system controls for effective air treatment
- Ionization has been shown to effectively reduce harmful pathogens, pollutants and odors
- Brush-type ionizer introduces a high concentration of both positive and negative ions into the air stream
- These bipolar ions are then dispersed into the occupied space through the duct system proactively reducing the airborne contaminants
- Ions travel within the building air stream and attach to particles, pathogens, and gas molecules, making them larger and easier to capture in the filtration system
- UL 2998 certified for zero ozone emission

Replacement Filter Media Kit With Frame
- Replaces existing pleated filter media
- Includes washable metal mesh screen and metal frame with clip for holding replaceable non-pleated filter

Indoor Air Quality ($CO_2$) Sensors
- Monitors $CO_2$ levels
- Reports to the Lennox® CORE Unit Controller, which adjusts economizer dampers as needed

## CONTROL SYSTEM

### LENNOX® CORE CONTROL SYSTEM

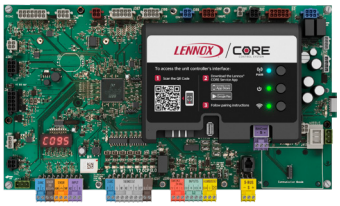


The Lennox® CORE Control System is designed to accelerate equipment install and service. Standard with all Model L™ rooftop units, control system integrates key technologies that lower installation costs, drive system efficiency, and protect your investments.

11 The Lennox® CORE Unit Controller is a microprocessor-based controller that provides flexible control of all unit functions.

CORE Mobile Service App

- Guided Setup with progress indicators, detailed help, and exportable summaries to manage simple, trouble-free setup, reducing commissioning times
- Enhanced Test Functionality provides real-time sensor readings, trending, and reports that enable easy troubleshooting
- Ability to set and configure parameters of the CORE Control System to manage sequence of operation
- Economizer test function ensures economizer is operating correctly

Download on the App Store

ANDROID APP ON Google play

Additional Features:

- Built-In 7-Segment Display shows Unit Status and active alarms for easy troubleshooting
- Buttons for test and clearing delays
- SmartWire™ System with keyed and removable screw terminals ensure correct field wiring
- Built-in BACnet MS/TP and IP allow open integration to building management systems
- Two-port Ethernet Switch enables daisy chaining for BACnet IP and automatic firmware updates

**NOTE** - Unit Internet Connection required.

- Profile setup copies key settings between units with the same configuration to reduce setup time
- USB port allows a technician to download and transfer unit information to help verify service was performed
- USB software updates on the Lennox® CORE Unit Controller enhance functionality without the need to change components
- Unit Controller Software

Configurable Built-In Functions

- Discharge Air Cooling Control
- Full modulation of variable speed compressor for discharge air temperature control in room sensor or thermostat mode
- Up to three distinct Cooling Airflows in Thermostat Mode
- Programmable independent heating, ventilation and cooling blower speeds
- Discharge Air Heating Control
- Economizer Control Options (See Economizer / Exhaust Air / Outdoor Air sections)
- Exhaust Fan Control Modes for fresh air damper position
- Configurable Morning Warm-up
- Night Setback Mode
- Fresh Air Tempering for Improved Ventilation
- Demand Control Ventilation
- Low Ambient Controls for operation down to 0°F
- Humiditrol®+ Operation
- Enhanced Dehumidification (Latent Demand Control without hot gas reheat)

Component Protection / Unit Safeguards:

- Compressor Time-Off Delay
- Adjustable Blower On/Off Delay
- Return Air Temperature Limit Control
- Safety Switch Input allows Controller to respond to a external safety switch trip
- Service Relay Output
- Thermostat Bounce Delay
- Smoke Alarm Mode has four choices (unit off, positive pressure, negative pressure, purge)
- "Strike Three" Protection
- Gas Valve Time Delay Between First and Second Stage
- Minimum Compressor Run Time

Control Methods / Interfaces:

- DDC and 24V Thermostat
- BACnet MS/TP and IP
- LONTalk (Factory and Field Option)
- Lennox S-BUS
- Compatibility with Lennox Wireless Zone Sensors
- Zone Temperature Sensor Input
- Dehumidistat and Humidity Sensor Inputs
- Indoor Air Quality Inputs (2)
- Built-in Control Parameter Defaults
- Permanent Diagnostic Code Storage
- Field Adjustable Control Parameters (Over 200 settings)
- Multiple Configurable Digital Inputs
- LED Indicators
- PC Interface connects the Lennox® CORE Unit Controller to a PC with the Lennox Unit Controller Software

**NOTE** - Lennox® CORE Control System features vary with the type of rooftop unit in which the control is installed.

## CONTROL SYSTEM

### LENNOX® CONTROL SYSTEM (continued)

Controls Options

**Factory or Field Installed**

Dirty Filter Switch
- Senses static pressure increase and issues alarm if necessary

Fresh Air Tempering
- Used in applications with high outside air requirements
- Controller energizes the first stage heat as needed to maintain a minimum supply air temperature for comfort, regardless of the thermostat demand
- When ordered as a factory option, sensor ships with the unit for field installation

Smoke Detector
- Photoelectric type
- Installed in supply air section, return air section or both sections
- Available with power board and single sensor (supply or return) or power board and two sensors (supply and return)
- Power board located in unit control compartment

### COMMERCIAL CONTROL SYSTEMS

Interoperability via BACnet® or LonTalk® Protocols
- Communication compatible with third-party automation systems that support the BACnet Application Specific Controller device profile, LonMark® Space Comfort Controller functional profile, or LonMark Discharge Air Controller functional profile

**Field Installed**

Thermostats and Room Sensors
- Control system and thermostat options, see Page 13
- After-Market unit controller options

## OPTIONS / ACCESSORIES

### ECONOMIZER

12
- Economizer operation is set and controlled by the Lennox® CORE Unit Controller
- Simple plug-in connections from economizer to unit controller for easy installation
- All Model L™ rooftop units are equipped with factory installed CEC Title 24 approved sensors for outside, return and discharge air temperature monitoring

**NOTE** - Optional sensors may be used instead of unit sensors to determine whether outdoor air is suitable for free cooling. See Options/Accessories table.

**Factory or Field Installed**

High Performance Economizer
- Approved for California Title 24 building standards
- Low leakage dampers are Air Movement and Control Association International (AMCA) Class 1A Certified - Maximum 3 CFM per sq. ft. leakage at 1 in. w.g.
- ASHRAE 90.1 and IECC compliant
- Combination Outdoor Air Hood is furnished
- Factory installed Economizer can be ordered with three exhaust options:
  - Barometric Relief Dampers
  - Power Exhaust Fan

**NOTE** - See Power Exhaust Fan section for additional requirements.

  - No Exhaust
- Field installed Economizer includes Barometric Relief Dampers with Combination Hood
- Barometric Relief Dampers allow relief of excess air
- Dampers prevent blow back and outdoor air infiltration during off cycle
- Bird screen furnished

**NOTE** - Barometric Relief Dampers are required when Economizer is factory installed with factory installed Power Exhaust Fan option. See Power Exhaust Fan section and Options/Accessories table.

**NOTE** - Horizontal Barometric Dampers are required for horizontal Economizer applications and must be ordered separately.

- Demand Control Ventilation (DCV) ready using optional $CO_2$ sensors
- Linked damper action
- High torque 24-volt fully-modulating spring return damper motor
- Return air and outdoor air dampers
- Plug-in connections to unit

## ECONOMIZER (continued)

**NOTE** - High Performance Economizers are not approved for use with enthalpy controls in Title 24 applications.

**NOTE** - The Free Cooling setpoint for Title 24 applications must be set based on the Climate Zone where the system is installed. See Section 140.4 "Prescriptive Requirements for Space Conditioning Systems" of the California Energy Commission's 2022 Building Energy Efficiency Standards.

**NOTE** - Refer to Installation Instructions for complete setup information.

### Differential Sensible Control

- Factory setting
- Uses outdoor air and return air sensors that are furnished with the unit
- The Lennox® CORE Unit Controller compares outdoor air and return air and using setpoints
- Enables the economizer when the outdoor air temperature is below the configured setpoint and cooler than return air

**NOTE** - Differential Sensible Control can be configured in the field to provide Offset Differential Sensible Control or Single Sensible Control.

In Offset Differential Sensible Control mode, the economizer is enabled if the temperature differential (offset) between outdoor air and return air reaches the configured setpoint.

In Single Sensible Control mode, the economizer is enabled when outdoor air temperature falls below the configured setpoint.

### Global Control

- The unit controller communicates with a DDC system with one global sensor (enthalpy or sensible) to determine whether outside air is suitable for free cooling on all units connected to the control system
- Sensor must be field provided

**NOTE** - Global control with enthalpy is not approved for Title 24 applications.

### Single Enthalpy Temperature Control (Not for Title 24)

- Outdoor air enthalpy sensor enables Economizer if the outdoor enthalpy is less than the setpoint of the control

### Differential Enthalpy Control (Not for Title 24)

- Order two Single Enthalpy Controls:
  - One is field installed in the return air section
  - One in the outdoor air section
- Allows the economizer control to select between outdoor air or return air, whichever has lower enthalpy

## Field Installed

### Outdoor Air CFM Control

- Maintains constant outdoor air volume levels on the supply air fan and varying unit airflows
- References a velocity sensor located in the rooftop unit outdoor air section
- Lennox® CORE Unit Controller changes the economizer position to help minimize the effect of supply fan speed changes on outdoor air volume levels
- Setpoint for outdoor air volume is established by field testing

**NOTE** - Not available with Demand Control Ventilation ($CO_2$ Sensor) or Building Pressure Control.

### Building Pressure Control

- Maintains constant building pressure level
- Using differential pressure information between the outdoor air and the building air, the Lennox® CORE Unit Controller changes the economizer position to help maintain a constant building pressure

**NOTE** - Not available with Demand Control Ventilation ($CO_2$ Sensor).

### Horizontal Barometric Relief Dampers

- For use when unit is configured for horizontal applications with an economizer
- Allows relief of excess air
- Blade type dampers prevent blow back and outdoor air infiltration during off cycle
- Field installed in return air duct
- Outdoor air hood with bird screen included
- Exhaust hood with bird screen furnished
- Requires Horizontal Economizer Conversion Kit

### Horizontal Economizer Conversion Kit

- Insulated panel covers the bottom return air opening on the unit base to convert downflow economizer to horizontal air flow

## OPTIONS / ACCESSORIES

### EXHAUST

**Factory or Field Installed**

Power Exhaust Fan
- Installs internal to unit for downflow applications with economizer option
- Provides exhaust air pressure relief
- Interlocked to run when supply air blower is operating
- Fan runs when outdoor air dampers are 50% open (adjustable)
- Motor is overload protected
- Fan is 16 in. diameter
- Four fan blades
- 1/3 HP motor

**NOTE** - If Power Exhaust is field installed with a factory installed Economizer, the Economizer must be ordered with No Exhaust option. Barometric Relief Dampers must also be ordered separately for field installation.

**NOTE** - If Power Exhaust is factory installed with a factory installed Economizer, Barometric Relief Dampers must also be ordered separately for field installation.

### OUTDOOR AIR

**Factory or Field Installed**

Motorized Outdoor Air Dampers
- Linked mechanical dampers
- Fully modulating spring return damper motor with plug-in connection
- 0 to 25% (fixed) outdoor air adjustable
- Installs in unit
- Outdoor air hood with bird screen included

**NOTE** - Outdoor Air Hood is shipped separately in the unit with factory installed dampers for field installation.

**Field Installed**

Manual Outdoor Air Damper
- Adjustable slide damper
- Installed in unit
- Outdoor air hood with bird screen included

### ROOF CURBS

**Field Installed**
- Nailer strip furnished (downflow only)
- Mates to unit
- US National Roofing Contractors Approved
- Shipped knocked down

Hybrid Roof Curbs, Downflow
- Interlocking tabs fasten corners together
- No tools required
- Can also be fastened together with furnished hardware
- Available in 8, 14, 18, and 24 inch heights

Adjustable Pitch Curb
- Fully adjustable pitch curbs (3/4 in. per foot in any direction) provide a level platform for rooftop units allowing flexible installations on roofs with uneven or sloped angles
- Interlocking tabs fasten corners together
- No tools required
- Hardware is furnished to connect upper curb with lower curb
- Available in 14 inch height

Adaptor Curbs (not shown)
- Curbs are regionally sourced
- Dimensions vary based upon the source

**NOTE** - Contact your local sales representative for a detailed cut sheet with applicable dimensions.

### CEILING DIFFUSERS

**Field Installed**

Ceiling Diffusers
(Flush or Step-Down)
- White powder coat finish on diffuser face and grilles
- Insulated UL listed duct liner
- Diffuser box has collars for duct connection
- Step-down diffusers have double deflection blades
- Flush diffusers have fixed blades
- Provisions for suspending
- Internally sealed to prevent recirculation
- Removable return air grille
- Adapts to T-bar ceiling grids or plaster ceilings

Transitions (Supply and Return)
- Used with diffusers
- Installs in roof curb
- Galvanized steel construction
- Flanges furnished for duct connection to diffusers
- Fully insulated

## HUMIDITROL™+ DEHUMIDIFICATION SYSTEM OPTION

### OVERVIEW

- Factory installed hot gas reheat option designed to control humidity
- 13 Humiditrol®+ utilizes advanced control algorithms, variable speed technology and a reheat coil to efficiently control humidity levels independent of room temperature
- Provides dehumidification on demand using ASHRAE 90.1 recommended method for comfort conditioning humidity control
- Unit comes equipped with one row reheat coil and solenoid valve

**NOTE** - A dehumidification demand from a relative humidity sensor, dehumidistat, a DDC controller or building automation system is required to control humidity.

### BENEFITS

- Improves indoor air quality
- Discharge air control for overcool protection
- Adjustable discharge air temperature setpoint
- Energy efficient dehumidification
- Modulating latent and sensible capacity
- Helps prevents damage due to high humidity levels
- Improves comfort levels by reducing space humidity levels

### OPERATION

No Dehumidification Demand

- The unit will operate conventionally whenever there is a demand for cooling or heating and no dehumidification demand
- Free cooling is only permitted when there is no demand for dehumidification

Dehumidification Demand Only

- Reheat operation will initiate on a dehumidification demand and does not require a cooling demand
- The unit will operate in hot gas reheat dehumidification mode until the relative humidity of the conditioned space is below the setpoint
- A solenoid valve diverts hot gas from the compressor to the reheat coil
- The cooled and dehumidified air from the evaporator is reheated as it passes through the reheat coil
- The de-superheated and partially condensed refrigerant continues to the outdoor condenser coil where condensing is completed
- Unit will continue to operate in this mode until the dehumidification demand is satisfied
- The reheat coil is sized to provide optimal reheat performance without overheating supply air
- The compressor will modulate based on dehumidification load
- The outdoor fan modulates speed to provide discharge air temperature control in reheat mode

Dehumidification and Cooling Demand

- If both a dehumidification and a cooling demand occur, the system will operate in cooling until the cooling demand is satisfied
- Then the system will energize the dehumidification mode

**NOTE** - See Sequence of Operation for additional information.

**TYPICAL DEHUMIDIFICATION SCHEMATIC**

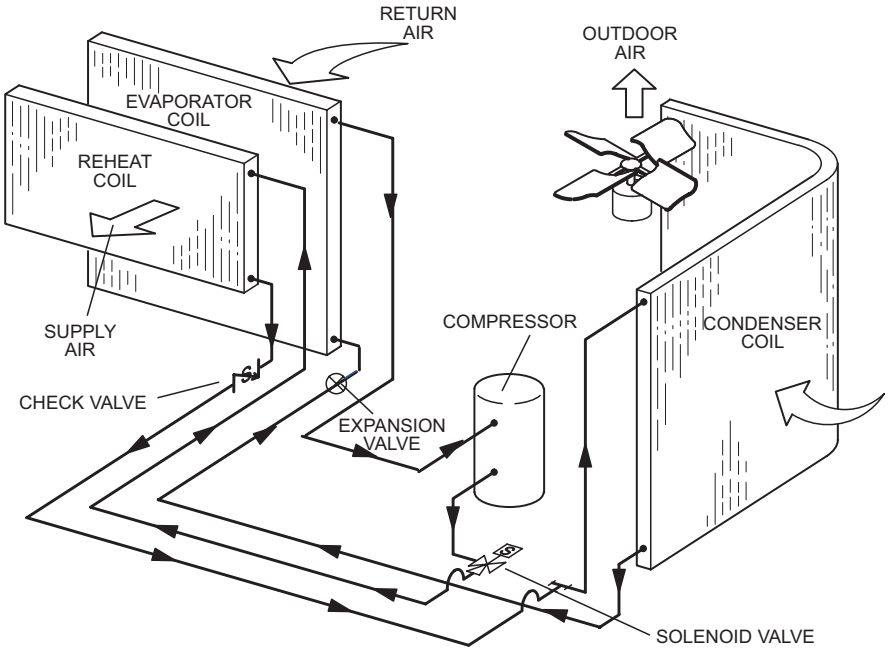

## OPTIONAL CONVENTIONAL TEMPERATURE CONTROL SYSTEMS

### CS8500 Commercial 7-Day Programmable Thermostat

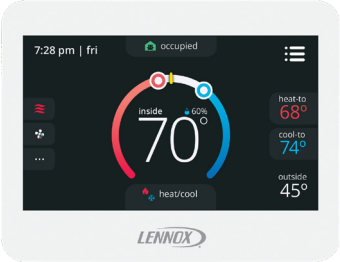


- Fully Communicating Sensor
- Full Color Touchscreen Interface
- Variable Speed System Control (On Compatible Units)
- Up To 4 Heat / 4 Cool
- Built-In Sensors For Temperature, Humidity And Optional $CO_2$
- Remote Sensor Options For Occupancy, Temperature
- BACnet Capable Options
- 5-2 or 7-Day Scheduling
- Smooth Setback Recovery
- Heat/Cool Auto-Changeover
- Four-Wire Installation
- FDD, ASHRAE, IECC Compliant

### CS7500 Commercial 7-Day Programmable Thermostat

- Premium Universal Thermostat
- Full Color Touchscreen Interface
- Up To 4 Heat / 3 Cool
- Built-In Sensors For Temperature and Humidity
- Remote Sensors Options For Temperature, Discharge Air, Outdoor Air
- 5-2 or 7-Day Scheduling
- Smooth Setback Recovery
- Heat/Cool Auto-Changeover
- FDD, ASHRAE, IECC Compliant

### CS3000 Commercial 5-2 Day Programmable Thermostat

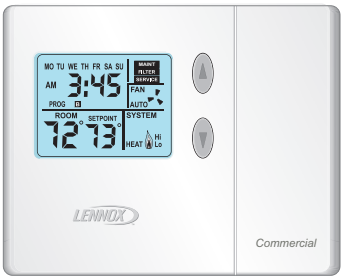


- Conventional Multi-Stage Thermostat
- Intuitive Display
- Push-Button Operation
- Up To 2 Heat / 2 Cool
- Built-In Temperature Sensor
- Remote Temperature Sensing
- Up to 5-2 Day Scheduling
- Smooth Setback Recovery
- Heat/Cool Auto-changeover

### Wired Temperature/Humidity Room Sensor (Non-Communicating)

- Terminal blocks for wiring connections
- Five-wire sensor connection
- Off-white plastic enclosure
- Non-adjustable
- Relative humidity range: 0 -100%
- +/- 3% Accuracy

## OPTIONAL CONVENTIONAL TEMPERATURE CONTROL SYSTEMS

| Description | | Order Number |
|---|---|---|
| **CS8500 Commercial 7 Day Programmable Thermostat** | | |
| CS8500 7-Day Thermostat | No $CO_2$ Sensing | **24K55** |
| | With $CO_2$ Sensing | **24K53** |
| Sensors/Accessories | [1] Remote non-adjustable wall-mount 10k | **47W37** |
| | [1] Remote non-adjustable wall-mount 11k | **94L61** |
| **Sysbus Network Cable (Yellow) for CS8500 and LCS-5030 Wired Room Sensor** | | |
| Twisted pair 100% shielded communication cable, Red and Black 22 AWG, yellow jacket, rated at 75°C, 300V, Plenum rated Insulation - Low smoke PVC, NEC, CMP | 500 ft. box | **27M19** |
| | 1000 ft. box | **94L63** |
| | 2500 ft. roll | **68M25** |
| **CS7500 Commercial 7-Day Programmable Thermostat** | | |
| CS7500 7-Day Thermostat | | **24K41** |
| Sensors/Accessories | [2] Remote non-adjustable wall-mount 20k | **47W36** |
| | [2] Remote non-adjustable wall-mount 10k | **47W37** |
| | Remote non-adjustable discharge air (duct mount) | **19L22** |
| | Outdoor temperature sensor | **X2658** |
| **CS3000 Commercial 5-2 Day Programmable Thermostat** | | |
| CS3000 5-2 Day Thermostat | | **11Y05** |
| Sensors/Accessories | Remote non-adjustable wall mount 10k averaging | **47W37** |
| | Thermostat wall mounting plate | **X2659** |
| **Universal Thermostat Guard with Lock (clear)** | | |
| | Inside Dimensions (H x W x D) 5-7/8 x 8-3/8 x 3 in. | **39P21** |
| **Temperature/Humidity Room Sensor** | | |
| A335MT13AE1 Wired Temperature/Humidity Room Sensor (Non-Communicating) | | **21W06** |

[1] Up to nine of the same type remote temperature sensors can be connected in parallel.

[2] Remote wall-mount sensors can be applied in any of the following combinations:
One Sensor - (1) 47W36, Two Sensors - (2) 47W37, Three Sensors - (2) 47W36 and (1) 47W37
Four Sensors - (4) 47W36, Five Sensors - (3) 47W36 and (2) 47W37

## SEQUENCE OF OPERATION

**COOLING**

**A-Two-Stage Thermostat**

1 - Economizer With Outdoor Air Suitable

**Y1 Demand**

- Compressor Off
- Blower Low
- Dampers Modulate

**Y2 Demand**

- Compressor Modulates
- Blower Low
- Dampers Full Open

*NOTE - Compressor is energized after damper has been at full open for three minutes.*

2 - No Economizer or Outdoor Air Not Suitable

**Y1 Demand**

- Compressor Modulates
- Blower Low
- Dampers Minimum Position

**Y2 Demand**

- Compressor Modulates
- Blower High
- Dampers Minimum Position

**B-Three-Stage Thermostat**

1 - Economizer With Outdoor Air Suitable

**Y1 Demand**

- Compressors Off
- Blower Low
- Dampers Modulate

**Y2 Demand**

- Compressor Modulates
- Blower Low
- Dampers Full Open

*NOTE - Compressor is energized after damper has been at full open for three minutes.*

**Y3 Demand**

- Compressor Modulates
- Blower High
- Dampers Full Open

**COOLING (CONTINUED)**

2 - No Economizer or Outdoor Air Not Suitable

**Y1 Demand**

- Compressor Modulates
- Blower Low
- Dampers Minimum Position

**Y2 Demand**

- Compressor Modulates
- Blower Mid
- Dampers Minimum Position

**Y3 Demand**

- Compressor Modulates
- Blower High
- Dampers Minimum Position

**C-Zone Sensor**

1 - Economizer With Outdoor Air Suitable

**Low Cooling Demand**

- Compressor Off
- Blower Variable
- Dampers Modulate

**High Cooling Demand**

- Compressor Modulates
- Blower Variable
- Dampers Full Open

*NOTE - Compressor is energized after damper has been at full open for three minutes.*

*NOTE - Free cooling is locked out when a dehumidification demand is received. The unit operates in dehumidification mode as if the outdoor air is not suitable.*

2 - No Economizer or Outdoor Air Not Suitable

**Any Demand**

- Compressor Modulates
- Blower Variable
- Damper Minimum Position

**HEATING**

**Heating Mode: Thermostat or Zone Sensor (1 stage W1)**

**W1 Demand**

Electric Heat is energized and the supply fan operates at high speed.

## SEQUENCE OF OPERATION

**HUMIDITROL™+**

**A - Thermostat Mode With 24V Humidistat**

Dehumidification Demand (DI4) and No Cooling Demand

Compressor operates at 100%, blower and outdoor fan modulate to maintain indoor coil and discharge air temperatures, reheat valve is energized.

**Y1 and DI4 Demand**

Compressor is modulating, blower is on low, and the reheat valve is de-energized.

**Y2 and DI4 Demand**

Compressor is modulating, blower is on high, reheat valve is de-energized.

**B - Thermostat Mode With Zone Relative Humidity Sensor**

Dehumidification Demand (Zone Relative Humidity is greater than the relative humidity setpoint) and No Cooling Demand

Compressor modulates based on zone relative humidity, blower and outdoor fan modulate to maintain indoor coil and discharge air temperatures, reheat valve is energized.

Y1 and Dehumidification Demand

Compressor is modulating, blower is on low, and the reheat valve is de-energized.

Y2 and Dehumidification Demand

Compressor is modulating, blower is on high, reheat valve is de-energized.

**C - Zone Sensor Mode With Humidistat**

Dehumidification Demand (DI4) and No Cooling Demand

Compressor operates at 100%, blower and outdoor fan modulate to maintain indoor coil and discharge air temperatures, reheat valve is energized.

Cooling and Dehumidification Demand

Compressor is modulating, blower is modulating, reheat valve is de-energized.

**D - Zone Sensor Mode With Zone Relative Humidity Sensor**

Dehumidification Demand (Zone Relative Humidity is greater than the relative humidity setpoint) and No Cooling Demand

Compressor modulates based on zone relative humidity, blower and outdoor fan modulate to maintain indoor coil and discharge air temperatures, reheat valve is energized.

Cooling and Dehumidification Demand

Compressor is modulating, blower is modulating, and the reheat valve is de-energized.

## OPTIONS / ACCESSORIES

| Item | | Order Number | Size 036 | 048 | 060 | 074 |
|---|---|---|---|---|---|---|
| **COOLING SYSTEM** | | | | | | |
| Condensate Drain Trap | PVC | **22H54** | OX | OX | OX | OX |
| | Copper | **76W27** | X | X | X | X |
| Drain Pan Overflow Switch | | **21Z07** | OX | OX | OX | OX |
| **BLOWER - SUPPLY AIR** | | | | | | |
| Motors | DirectPlus™ Direct Drive ECM Blower System with SZVAV | Factory | O | O | O | O |
| | DirectPlus™ Direct Drive ECM Blower System with VAV | Factory | O | O | O | O |
| **CABINET** | | | | | | |
| Combination Coil/Hail Guards | | **13T03** | OX | OX | OX | OX |
| Corrosion Protection (indoor coil / outdoor coil) | | Factory | O | O | O | O |
| **CONTROLS** | | | | | | |
| Commercial Controls | Lennox® CORE Control System - LonTalk® Module | **54W27** | OX | OX | OX | OX |
| | CPC Einstein Integration | Factory | O | O | O | O |
| | Novar® LSE | Factory | O | O | O | O |
| Dirty Filter Switch | | **53W66** | OX | OX | OX | OX |
| Fresh Air Tempering | | **21Z08** | OX | OX | OX | OX |
| Smoke Detector - Supply or Return (Power board and one sensor) | | **21Z11** | OX | OX | OX | OX |
| Smoke Detector - Supply and Return (Power board and two sensors) | | **21Z12** | OX | OX | OX | OX |
| **ELECTRICAL** | | | | | | |
| Voltage 60 Hz | 208/230V-3ph | Factory | O | O | O | O |
| | 460V-3ph | Factory | O | O | O | O |
| | 575V-3ph | Factory | O | O | O | O |
| HACR Circuit Breakers | | Factory | O | O | O | O |
| Disconnect Switch (See Electrical / Electric Heat Tables for selection) | 80 amp | **22A23** | OX | OX | OX | OX |
| | 150 amp | **22A24** | | | OX | OX |
| [1] Short-Circuit Current Rating (SCCR) of 100kA (includes Phase/Voltage Detection) | | Factory | O | O | O | O |
| GFI Service Outlets | 15 amp non-powered, field-wired (208/230V, 460V only) | **74M70** | OX | OX | OX | OX |
| | [2] 20 amp non-powered, field-wired (208/230V, 460V, 575V) | **67E01** | X | X | X | X |
| | [2] 20 amp non-powered, field-wired (575V only) | Factory | O | O | O | O |
| Weatherproof Cover for GFI | | **10C89** | X | X | X | X |
| Phase/Voltage Detection - 3 Phase Models Only | | Factory | O | O | O | O |
| **ELECTRIC HEAT** | | | | | | |
| 7.5 kW | 208/240V-3ph | **24U11** | OX | OX | OX | OX |
| | 460V-3ph | **24U12** | OX | OX | OX | OX |
| | 575V-3ph | **24U13** | OX | OX | OX | OX |
| 15 kW | 208/240V-3ph | **24U16** | OX | OX | OX | OX |
| | 460V-3ph | **24U17** | OX | OX | OX | OX |
| | 575V-3ph | **24U18** | OX | OX | OX | OX |
| 22.5 kW | 208/240V-3ph | **24U20** | | | OX | OX |
| | 460V-3ph | **24U21** | | | OX | OX |
| | 575V-3ph | **24U22** | | | OX | OX |
| [3] 30 kW | 208/240V-3ph | **24U23** | | | | OX |
| | 460V-3ph | **24U24** | | | | OX |
| | 575V-3ph | **24U25** | | | | OX |

[1] Disconnect Switch not available with higher SCCR option. Short-Circuit Current Rating option not available on field installed electric heat.
[2] Canada requires a minimum 20 amp circuit. Select 20 amp, non-powered, field wired GFI.
[3] NOTE - 30 kW Electric Heat not available until September 2025.

NOTE - Order numbers shown are for ordering field installed accessories.
OX - Configure To Order (Factory Installed) or Field Installed
O = Configure To Order (Factory Installed)
X = Field Installed

## OPTIONS / ACCESSORIES

| Item | | Order Number | Size 036 | 048 | 060 | 074 |
|---|---|---|---|---|---|---|
| **ECONOMIZER** | | | | | | |
| **High Performance Economizer With Outdoor Air Hood (Sensible Control) (Approved for California Title 24 Building Standards / AMCA Class 1A Certified)** | | | | | | |
| High Performance Economizer - Includes Barometric Relief Dampers and Combination Hood | | **20H48** | OX | OX | OX | OX |
| **Economizer Accessories** | | | | | | |
| Horizontal Economizer Conversion Kit | | **17W45** | X | X | X | X |
| **Economizer Controls** | | | | | | |
| Differential Enthalpy (Not for Title 24) | Order 2 | **21Z09** | OX | OX | OX | OX |
| Sensible Control | Sensor is Furnished | Factory | O | O | O | O |
| Single Enthalpy (Not for Title 24) | | **21Z09** | OX | OX | OX | OX |
| Outdoor Air CFM Control | | **13J76** | X | X | X | X |
| Global Control | Sensor Field Provided | Factory | O | O | O | O |
| Building Pressure Control | | **13J77** | X | X | X | X |
| **POWER EXHAUST FAN (DOWNFLOW ONLY)** | | | | | | |
| Standard Static | 208/230V-3ph | **21Z13** | OX | OX | OX | OX |
| *NOTE - Factory installed Power Exhaust Fan requires "Barometric Relief Dampers for Power Exhaust Kit" for field installation. See below.* | 460V-3ph | **21Z14** | OX | OX | OX | OX |
| | 575V-3ph | **21Z15** | OX | OX | OX | OX |
| **BAROMETRIC RELIEF** | | | | | | |
| [2] Barometric Relief Dampers for Power Exhaust Kit | | **21Z21** | X | X | X | X |
| [3] Horizontal Barometric Relief Dampers With Outdoor Air and Exhaust Hood | | **19F01** | X | X | X | X |
| **OUTDOOR AIR** | | | | | | |
| **Outdoor Air Dampers With Outdoor Air Hood** | | | | | | |
| Motorized | | **15D17** | OX | OX | OX | OX |
| Manual | | **15D18** | X | X | X | X |
| **HUMIDITROL™+ HOT GAS REHEAT OPTION** | | | | | | |
| Humiditrol®+ Dehumidification Option | | Factory | O | O | O | O |

[4] Required when Economizer is factory installed with factory installed Power Exhaust Fan option.
[5] Required when Economizer is configured for horizontal airflow.

NOTE - Order numbers shown are for ordering field installed accessories.
OX - Configure To Order (Factory Installed) or Field Installed
O = Configure To Order (Factory Installed)
X = Field Installed

## OPTIONS / ACCESSORIES

| Item | | Order Number | Size 036 | 048 | 060 | 074 |
|---|---|---|---|---|---|---|
| **INDOOR AIR QUALITY** | | | | | | |
| **Air Filters** | | | | | | |
| Healthy Climate® High Efficiency Air Filters 20 x 20 x 2 in. | MERV 8 (Order 4) | **54W21** | OX | OX | OX | OX |
| | MERV 13 (Order 4) | **52W39** | OX | OX | OX | OX |
| | MERV 16 (Order 4) | **21U40** | OX | OX | OX | OX |
| Replaceable Media Filter With Metal Mesh Frame 20 x 20 x 2 in. (includes non-pleated filter media) | (Order 4) | **44N60** | X | X | X | X |
| **Needlepoint Bipolar Ionization (NPBI)** | | | | | | |
| Needlepoint Bipolar Ionization Kit | | **21U35** | X | X | X | X |
| **Indoor Air Quality ($CO_2$) Sensors** | | | | | | |
| Sensor - Wall-mount, off-white plastic cover with LCD display | | **24C58** | X | X | X | X |
| Sensor - Wall-mount, off-white plastic cover, no display | | **23V86** | X | X | X | X |
| Sensor - Black plastic case, LCD display, rated for plenum mounting | | **87N52** | X | X | X | X |
| Sensor - Black plastic case, no display, rated for plenum mounting | | **23V87** | X | X | X | X |
| $CO_2$ Sensor Duct Mounting Kit - for downflow applications | | **23Y47** | X | X | X | X |
| Aspiration Box - for duct mounting non-plenum rated $CO_2$ sensors (**24C58**) | | **90N43** | X | X | X | X |
| **UVC Germicidal Lamps** | | | | | | |
| [4] Healthy Climate® UVC Light Kit (110/230V-1ph) | | **21A92** | X | X | X | X |
| Step-Down Transformer | 460V primary, 230V secondary | **10H20** | X | X | X | X |
| | 575V primary, 230V secondary | **10H21** | X | X | X | X |
| **ROOF CURBS** | | | | | | |
| **Hybrid Roof Curbs, Downflow** | | | | | | |
| 8 in. height | | **11F50** | X | X | X | X |
| 14 in. height | | **11F51** | X | X | X | X |
| 18 in. height | | **11F52** | X | X | X | X |
| 24 in. height | | **11F53** | X | X | X | X |
| **Transition Curb** | | | | | | |
| Matches Model L™ 036-074 Units to existing L Series® Curbs | | **31B05** | X | X | X | X |
| **CEILING DIFFUSERS** | | | | | | |
| Step-Down - Order one | RTD9-65S | **13K60** | X | X | X | |
| | RTD11-95S | **13K61** | | | | X |
| Flush - Order one | FD9-65S | **13K55** | X | X | X | |
| | FD11-95S | **13K56** | | | | X |
| Transitions (Supply and Return) - Order one | T1TRAN10AN1 | **17W53** | X | X | X | |
| | T1TRAN20N-1 | **17W54** | | | | X |

[6] Lamps operate on 110-230V single-phase power supply. Step-down transformer may be ordered separately for 460V and 575V units. Alternately, 110V power supply may be used to directly power the UVC ballast(s).

NOTE - Order numbers shown are for ordering field installed accessories.
OX - Configure To Order (Factory Installed) or Field Installed
O = Configure To Order (Factory Installed)
X = Field Installed

| SPECIFICATIONS | | | | | UNIT |
|---|---|---|---|---|---|
| **Model** | | **LCM036U5E** | **LCM048U5E** | **LCM060U5E** | **LCM074U5E** |
| **Blower Type** | | DirectPlus™ ECM Direct Drive with SZVAV | DirectPlus™ ECM Direct Drive with SZVAV | DirectPlus™ ECM Direct Drive with SZVAV | DirectPlus™ ECM Direct Drive with SZVAV |
| **Model Number** | | **LCM036U5P** | **LCM048U5P** | **LCM060U5P** | **LCM074U5P** |
| **Blower Type** | | DirectPlus™ ECM Direct Drive with VAV | DirectPlus™ ECM Direct Drive with VAV | DirectPlus™ ECM Direct Drive with VAV | DirectPlus™ ECM Direct Drive with VAV |
| **Efficiency Type** | | Ultra-High | Ultra-High | Ultra-High | Ultra-High |
| **Nominal Tonnage** | | 3 Ton | 4 Ton | 5 Ton | 6 Ton |
| **Cooling Performance** | Gross Cooling Capacity (Btuh) | 36,000 | 48,500 | 60,000 | 71,000 |
| | [1] Net Cooling Capacity (Btuh) | 35,000 | 48,000 | 58,000 | 69,000 |
| | AHRI Rated Air Flow (cfm) | 1320 | 1600 | 1850 | 2150 |
| | SEER2 (Btuh/Watt) | 21.2 | 19.9 | 19.5 | - - - |
| | EER2 (Btuh/Watt) | 14.3 | 13.2 | 12.5 | - - - |
| | IEER (Btuh/Watt) | - - - | - - - | - - - | 23.1 |
| | EER (Btuh/Watt) | - - - | - - - | - - - | 12.2 |
| | Total Unit Power - kW | 2.5 | 3.6 | 4.6 | 5.5 |
| **Sound Rating Number** | dBA | 73 | 76 | 78 | 80 |
| **Refrigerant Charge** | Refrigerant Type | R-454B | R-454B | R-454B | R-454B |
| | Without Reheat Option | 4 lbs. 8 oz. | 5 lbs. 1 oz. | 5 lbs. 1 oz. | 5 lbs. 1 oz. |
| | With Reheat Option | 5 lbs. 11 oz. | 5 lbs. 9 oz. | 5 lbs. 9 oz. | 5 lbs. 9 oz. |
| **Electric Heat Available** | | 7.5 and 15 kW | 7.5 and 15 kW | 7.5, 15 and 22.5 kW | 7.5, 15 and 22.5 and 30 kW |
| **Compressor Type (Number)** | | Variable Capacity Scroll (1) | | | |
| **Outdoor Coil** | Net face area - ft.$^2$ | 17.8 | 17.8 | 17.8 | 17.8 |
| | Rows | 1 | 1 | 1 | 1 |
| | Fins - in. | 23 | 23 | 23 | 23 |
| **Outdoor Coil Fans** | Motor HP (number and type) | 1/3 (1 ECM) | 1/3 (1 ECM) | 1/3 (1 ECM) | 1/3 (1 ECM) |
| | Rpm | 550 - 850 | 600 - 900 | 700 - 950 | 700 - 1050 |
| | Watts | 50 - 200 | 80 - 236 | 120 - 272 | 120 - 360 |
| | Diameter (Number) - in. | (1) 24 | (1) 24 | (1) 24 | (1) 24 |
| | Blades | 3 | 3 | 3 | 3 |
| | Total air volume - cfm | 2500 - 3850 | 2750 - 4100 | 3200 - 4300 | 3200 - 4700 |
| **Indoor Coil** | Net face area - ft.$^2$ | 8.65 | 8.65 | 8.65 | 8.65 |
| | Rows | 1 | 1 | 1 | 1 |
| | Fins - in. | 20 | 20 | 20 | 20 |
| | Condensate drain size (NPT) - in. | (1) 1 | | | |
| | Expansion device type | Balanced Port Thermostatic Expansion Valve,removable power head | | | |
| **Indoor Blower** | Motor HP (number and type) | 1.5 HP (1 ECM) | 1.5 HP (1 ECM) | 1.5 HP (1 ECM) | 1.5 HP (1 ECM) |
| | Wheel (Number) diameter x width - in. | (1) 14 x 5 | (1) 14 x 5 | (1) 14 x 5 | (1) 14 x 5 |
| **Filters** | Type of filter | MERV 4, Disposable | | | |
| | Number and size - in. | (4) 20 x 20 x 2 | | | |
| **Line voltage data (Volts-Phase-Hz)** | | 208/230-3-60, 460-3-60, 575-3-60 | | | |

NOTE - Net capacity includes evaporator blower motor heat deduction. Gross capacity does not include evaporator blower motor heat deduction.

[1] AHRI Certified to AHRI Standard 210/240 (3-5 ton) or 340/360 (6 ton): 95°F outdoor air temperature and 80°F db/67°F wb entering evaporator air; minimum external duct static pressure.

## COOLING RATINGS

NOTE − For Temperatures and Capacities not shown in tables, see bulletin − Cooling Unit Rating Table Correction Factor Data in Miscellaneous Engineering Data section.

### 3 TON - LCM036U5E/P

| Entering Wet Bulb Temperature | Total Air Volume | Outdoor Air Temperature Entering Outdoor Coil | | | | | | | | | | | | | | |
|---|---|---|---|---|---|---|---|---|---|---|---|---|---|---|---|---|
| | | 65°F | | | | | 75°F | | | | | 85°F | | | | |
| | | Total Cooling Cap. | Comp. Motor Input | Sensible To Total Ratio (S/T) Dry Bulb | | | Total Cooling Cap. | Comp. Motor Input | Sensible To Total Ratio (S/T) Dry Bulb | | | Total Cooling Cap. | Comp. Motor Input | Sensible To Total Ratio (S/T) Dry Bulb | | |
| | cfm | kBtuh | kW | 75°F | 80°F | 85°F | kBtuh | kW | 75°F | 80°F | 85°F | kBtuh | kW | 75°F | 80°F | 85°F |
| 63°F | 550 | 29.8 | 1.38 | .66 | .74 | .83 | 28.9 | 1.62 | .66 | .75 | .84 | 28.0 | 1.89 | .66 | .76 | .85 |
| | 700 | 32.6 | 1.32 | .68 | .78 | .89 | 31.6 | 1.57 | .69 | .79 | .90 | 30.5 | 1.84 | .69 | .81 | .92 |
| | 850 | 34.7 | 1.28 | .71 | .83 | .95 | 33.5 | 1.54 | .72 | .84 | .97 | 32.3 | 1.81 | .73 | .86 | .98 |
| | 1000 | 36.2 | 1.25 | .74 | .88 | 1.00 | 35.1 | 1.51 | .75 | .89 | 1.00 | 33.7 | 1.79 | .77 | .91 | 1.00 |
| | 1200 | 37.9 | 1.21 | .79 | .95 | 1.00 | 36.6 | 1.49 | .80 | .97 | 1.00 | 35.4 | 1.77 | .82 | .98 | 1.00 |
| | 1400 | 39.5 | 1.14 | .84 | 1.00 | 1.00 | 38.4 | 1.45 | .85 | 1.00 | 1.00 | 37.2 | 1.74 | .87 | 1.00 | 1.00 |
| 67°F | 550 | 32.0 | 1.33 | .54 | .62 | .71 | 31.0 | 1.59 | .54 | .63 | .71 | 30.0 | 1.85 | .55 | .63 | .72 |
| | 700 | 35.0 | 1.28 | .55 | .65 | .75 | 33.9 | 1.53 | .56 | .66 | .76 | 32.8 | 1.81 | .56 | .66 | .77 |
| | 850 | 37.2 | 1.23 | .57 | .68 | .79 | 35.9 | 1.50 | .58 | .69 | .81 | 34.7 | 1.78 | .58 | .70 | .82 |
| | 1000 | 38.8 | 1.20 | .59 | .72 | .84 | 37.5 | 1.47 | .60 | .73 | .86 | 36.1 | 1.75 | .60 | .74 | .88 |
| | 1200 | 40.3 | 1.12 | .62 | .76 | .91 | 39.0 | 1.39 | .63 | .78 | .93 | 37.5 | 1.73 | .63 | .79 | .95 |
| | 1400 | 41.5 | 1.10 | .65 | .82 | .97 | 40.2 | 1.38 | .66 | .83 | .99 | 38.6 | 1.71 | .67 | .85 | 1.00 |
| 71°F | 550 | 34.3 | 1.29 | .44 | .52 | .59 | 33.4 | 1.54 | .44 | .52 | .60 | 32.3 | 1.81 | .44 | .52 | .60 |
| | 700 | 37.5 | 1.22 | .44 | .53 | .62 | 36.4 | 1.49 | .44 | .53 | .63 | 35.2 | 1.77 | .44 | .54 | .63 |
| | 850 | 39.8 | 1.13 | .45 | .55 | .65 | 38.6 | 1.45 | .45 | .55 | .66 | 37.2 | 1.74 | .45 | .56 | .67 |
| | 1000 | 41.5 | 1.10 | .45 | .57 | .69 | 40.1 | 1.38 | .45 | .58 | .70 | 38.7 | 1.71 | .46 | .58 | .71 |
| | 1200 | 43.1 | 1.07 | .46 | .60 | .74 | 41.7 | 1.36 | .47 | .61 | .75 | 40.1 | 1.64 | .47 | .62 | .77 |
| | 1400 | 44.4 | 1.05 | .48 | .63 | .79 | 42.8 | 1.34 | .48 | .64 | .81 | 41.2 | 1.63 | .48 | .65 | .82 |

| Entering Wet Bulb Temperature | Total Air Volume | Outdoor Air Temperature Entering Outdoor Coil | | | | | | | | | | | | | | |
|---|---|---|---|---|---|---|---|---|---|---|---|---|---|---|---|---|
| | | 95°F | | | | | 105°F | | | | | 115°F | | | | |
| | | Total Cooling Cap. | Comp. Motor Input | Sensible To Total Ratio (S/T) Dry Bulb | | | Total Cooling Cap. | Comp. Motor Input | Sensible To Total Ratio (S/T) Dry Bulb | | | Total Cooling Cap. | Comp. Motor Input | Sensible To Total Ratio (S/T) Dry Bulb | | |
| | cfm | kBtuh | kW | 75°F | 80°F | 85°F | kBtuh | kW | 75°F | 80°F | 85°F | kBtuh | kW | 75°F | 80°F | 85°F |
| 63°F | 550 | 27.0 | 2.17 | .67 | .77 | .86 | 25.9 | 2.48 | .68 | .78 | .88 | 24.8 | 2.83 | .69 | .79 | .90 |
| | 700 | 29.4 | 2.13 | .70 | .82 | .93 | 28.1 | 2.45 | .71 | .83 | .95 | 26.9 | 2.80 | .73 | .85 | .98 |
| | 850 | 31.1 | 2.11 | .74 | .87 | 1.00 | 29.8 | 2.43 | .75 | .89 | 1.00 | 28.3 | 2.78 | .77 | .92 | 1.00 |
| | 1000 | 32.4 | 2.09 | .78 | .93 | 1.00 | 31.0 | 2.41 | .80 | .96 | 1.00 | 29.6 | 2.76 | .82 | .98 | 1.00 |
| | 1200 | 34.1 | 2.07 | .84 | 1.00 | 1.00 | 32.9 | 2.39 | .86 | 1.00 | 1.00 | 31.5 | 2.74 | .88 | 1.00 | 1.00 |
| | 1400 | 35.9 | 2.04 | .90 | 1.00 | 1.00 | 34.6 | 2.36 | .92 | 1.00 | 1.00 | 33.2 | 2.72 | .94 | 1.00 | 1.00 |
| 67°F | 550 | 29.0 | 2.14 | .55 | .64 | .73 | 27.9 | 2.46 | .55 | .65 | .74 | 26.7 | 2.80 | .56 | .65 | .75 |
| | 700 | 31.5 | 2.10 | .57 | .67 | .78 | 30.3 | 2.42 | .57 | .68 | .80 | 28.9 | 2.77 | .58 | .70 | .81 |
| | 850 | 33.3 | 2.08 | .59 | .71 | .84 | 31.9 | 2.40 | .60 | .73 | .86 | 30.4 | 2.75 | .60 | .74 | .88 |
| | 1000 | 34.7 | 2.06 | .61 | .75 | .89 | 33.1 | 2.38 | .62 | .77 | .92 | 31.7 | 2.74 | .63 | .79 | .94 |
| | 1200 | 36.0 | 2.04 | .65 | .81 | .97 | 34.5 | 2.37 | .66 | .83 | .99 | 32.8 | 2.72 | .67 | .85 | 1.00 |
| | 1400 | 37.0 | 2.02 | .68 | .87 | 1.00 | 35.5 | 2.35 | .69 | .89 | 1.00 | 33.8 | 2.71 | .71 | .92 | 1.00 |
| 71°F | 550 | 31.2 | 2.10 | .44 | .52 | .61 | 30.1 | 2.43 | .44 | .53 | .61 | 28.8 | 2.77 | .44 | .53 | .62 |
| | 700 | 33.9 | 2.07 | .44 | .54 | .64 | 32.5 | 2.39 | .45 | .55 | .65 | 31.1 | 2.74 | .45 | .56 | .67 |
| | 850 | 35.8 | 2.04 | .45 | .57 | .68 | 34.3 | 2.37 | .46 | .58 | .70 | 32.7 | 2.72 | .46 | .59 | .71 |
| | 1000 | 37.2 | 2.02 | .46 | .59 | .73 | 35.7 | 2.35 | .47 | .60 | .74 | 34.0 | 2.71 | .47 | .61 | .76 |
| | 1200 | 38.6 | 2.00 | .48 | .63 | .78 | 36.9 | 2.33 | .48 | .64 | .80 | 35.2 | 2.69 | .49 | .66 | .83 |
| | 1400 | 39.6 | 1.98 | .49 | .67 | .84 | 37.9 | 2.32 | .50 | .68 | .86 | 36.1 | 2.67 | .50 | .70 | .89 |

## COOLING RATINGS

NOTE − For Temperatures and Capacities not shown in tables, see bulletin − Cooling Unit Rating Table Correction Factor Data in Miscellaneous Engineering Data section.

### 4 TON - LCM048U5E/P

| Entering Wet Bulb Temperature | Total Air Volume | Outdoor Air Temperature Entering Outdoor Coil | | | | | | | | | | | | | | |
|---|---|---|---|---|---|---|---|---|---|---|---|---|---|---|---|---|
| | | 65°F | | | | | 75°F | | | | | 85°F | | | | |
| | | Total Cooling Cap. | Comp. Motor Input | Sensible To Total Ratio (S/T) Dry Bulb | | | Total Cooling Cap. | Comp. Motor Input | Sensible To Total Ratio (S/T) Dry Bulb | | | Total Cooling Cap. | Comp. Motor Input | Sensible To Total Ratio (S/T) Dry Bulb | | |
| | cfm | kBtuh | kW | 75°F | 80°F | 85°F | kBtuh | kW | 75°F | 80°F | 85°F | kBtuh | kW | 75°F | 80°F | 85°F |
| 63°F | 850 | 43.9 | 1.97 | .67 | .76 | .85 | 42.6 | 2.29 | .67 | .77 | .86 | 41.3 | 2.68 | .68 | .78 | .88 |
| | 1000 | 46.4 | 1.95 | .68 | .79 | .90 | 44.9 | 2.28 | .69 | .80 | .91 | 43.4 | 2.62 | .70 | .81 | .92 |
| | 1150 | 48.3 | 1.92 | .71 | .82 | .94 | 46.8 | 2.27 | .71 | .84 | .95 | 45.3 | 2.62 | .72 | .85 | .97 |
| | 1300 | 50.0 | 1.90 | .73 | .86 | .98 | 48.5 | 2.26 | .74 | .87 | .99 | 46.7 | 2.62 | .75 | .89 | 1.00 |
| | 1600 | 52.8 | 1.87 | .78 | .93 | 1.00 | 51.0 | 2.23 | .79 | .95 | 1.00 | 49.3 | 2.61 | .80 | .96 | 1.00 |
| | 1900 | 55.2 | 1.84 | .83 | .99 | 1.00 | 53.5 | 2.21 | .85 | 1.00 | 1.00 | 51.8 | 2.59 | .86 | 1.00 | 1.00 |
| 67°F | 850 | 47.0 | 1.93 | .55 | .64 | .72 | 45.6 | 2.28 | .55 | .64 | .73 | 44.2 | 2.62 | .55 | .65 | .74 |
| | 1000 | 49.7 | 1.90 | .56 | .66 | .75 | 48.2 | 2.27 | .56 | .66 | .76 | 46.5 | 2.62 | .56 | .67 | .78 |
| | 1150 | 51.8 | 1.88 | .57 | .68 | .79 | 50.2 | 2.25 | .57 | .69 | .80 | 48.5 | 2.61 | .58 | .70 | .81 |
| | 1300 | 53.6 | 1.86 | .58 | .70 | .82 | 51.8 | 2.22 | .59 | .71 | .84 | 49.9 | 2.60 | .59 | .72 | .85 |
| | 1600 | 56.2 | 1.83 | .61 | .75 | .89 | 54.3 | 2.20 | .62 | .76 | .91 | 52.2 | 2.58 | .63 | .78 | .93 |
| | 1900 | 58.1 | 1.80 | .64 | .81 | .96 | 56.1 | 2.19 | .65 | .82 | .98 | 54.0 | 2.59 | .66 | .84 | 1.00 |
| 71°F | 850 | 50.6 | 1.90 | .44 | .52 | .61 | 49.0 | 2.26 | .44 | .53 | .61 | 47.5 | 2.61 | .44 | .53 | .62 |
| | 1000 | 53.4 | 1.86 | .44 | .53 | .63 | 51.7 | 2.23 | .44 | .54 | .63 | 50.0 | 2.60 | .45 | .54 | .64 |
| | 1150 | 55.6 | 1.83 | .45 | .55 | .65 | 53.8 | 2.21 | .45 | .55 | .66 | 51.9 | 2.59 | .45 | .56 | .67 |
| | 1300 | 57.3 | 1.81 | .45 | .56 | .67 | 55.4 | 2.19 | .45 | .57 | .68 | 53.4 | 2.58 | .45 | .57 | .70 |
| | 1600 | 60.1 | 1.77 | .46 | .59 | .73 | 57.9 | 2.17 | .46 | .60 | .74 | 55.8 | 2.57 | .47 | .61 | .75 |
| | 1900 | 62.1 | 1.74 | .47 | .63 | .78 | 59.8 | 2.15 | .48 | .64 | .79 | 57.4 | 2.56 | .48 | .65 | .81 |

| Entering Wet Bulb Temperature | Total Air Volume | Outdoor Air Temperature Entering Outdoor Coil | | | | | | | | | | | | | | |
|---|---|---|---|---|---|---|---|---|---|---|---|---|---|---|---|---|
| | | 95°F | | | | | 105°F | | | | | 115°F | | | | |
| | | Total Cooling Cap. | Comp. Motor Input | Sensible To Total Ratio (S/T) Dry Bulb | | | Total Cooling Cap. | Comp. Motor Input | Sensible To Total Ratio (S/T) Dry Bulb | | | Total Cooling Cap. | Comp. Motor Input | Sensible To Total Ratio (S/T) Dry Bulb | | |
| | cfm | kBtuh | kW | 75°F | 80°F | 85°F | kBtuh | kW | 75°F | 80°F | 85°F | kBtuh | kW | 75°F | 80°F | 85°F |
| 63°F | 850 | 39.8 | 2.99 | .68 | .79 | .89 | 38.3 | 3.44 | .69 | .80 | .91 | 36.7 | 3.88 | .70 | .81 | .93 |
| | 1000 | 41.9 | 2.99 | .71 | .82 | .94 | 40.2 | 3.38 | .72 | .84 | .96 | 38.6 | 3.88 | .73 | .86 | .98 |
| | 1150 | 43.5 | 2.98 | .73 | .86 | .99 | 41.8 | 3.38 | .75 | .88 | 1.00 | 39.9 | 3.81 | .76 | .90 | 1.00 |
| | 1300 | 44.9 | 2.99 | .76 | .91 | 1.00 | 43.1 | 3.38 | .78 | .93 | 1.00 | 41.2 | 3.81 | .79 | .95 | 1.00 |
| | 1600 | 47.4 | 2.99 | .82 | .98 | 1.00 | 45.7 | 3.39 | .84 | 1.00 | 1.00 | 43.9 | 3.83 | .86 | 1.00 | 1.00 |
| | 1900 | 50.1 | 2.98 | .88 | 1.00 | 1.00 | 48.3 | 3.40 | .90 | 1.00 | 1.00 | 46.3 | 3.84 | .93 | 1.00 | 1.00 |
| 67°F | 850 | 42.7 | 2.99 | .56 | .65 | .75 | 41.1 | 3.38 | .56 | .66 | .76 | 39.3 | 3.81 | .57 | .67 | .78 |
| | 1000 | 44.9 | 2.99 | .57 | .68 | .79 | 43.1 | 3.38 | .58 | .69 | .80 | 41.2 | 3.81 | .58 | .70 | .82 |
| | 1150 | 46.7 | 2.99 | .58 | .71 | .83 | 44.7 | 3.39 | .59 | .72 | .85 | 42.6 | 3.82 | .60 | .73 | .87 |
| | 1300 | 48.0 | 2.99 | .60 | .74 | .87 | 46.0 | 3.39 | .61 | .75 | .89 | 43.9 | 3.83 | .62 | .77 | .91 |
| | 1600 | 50.2 | 2.98 | .64 | .80 | .95 | 48.0 | 3.40 | .65 | .81 | .97 | 45.7 | 3.84 | .66 | .84 | 1.00 |
| | 1900 | 51.9 | 2.98 | .67 | .85 | 1.00 | 49.6 | 3.40 | .69 | .88 | 1.00 | 47.2 | 3.84 | .70 | .90 | 1.00 |
| 71°F | 850 | 45.9 | 2.99 | .44 | .53 | .62 | 44.1 | 3.38 | .44 | .54 | .63 | 42.3 | 3.82 | .45 | .54 | .64 |
| | 1000 | 48.2 | 2.99 | .45 | .55 | .65 | 46.3 | 3.39 | .45 | .55 | .66 | 44.3 | 3.83 | .45 | .56 | .67 |
| | 1150 | 50.0 | 2.98 | .45 | .56 | .68 | 47.9 | 3.40 | .45 | .57 | .69 | 45.8 | 3.84 | .46 | .58 | .71 |
| | 1300 | 51.5 | 2.98 | .46 | .58 | .71 | 49.4 | 3.40 | .46 | .59 | .72 | 47.1 | 3.84 | .47 | .60 | .74 |
| | 1600 | 53.6 | 2.97 | .47 | .62 | .77 | 51.3 | 3.40 | .48 | .63 | .79 | 48.9 | 3.85 | .48 | .65 | .81 |
| | 1900 | 55.1 | 2.97 | .49 | .66 | .83 | 52.7 | 3.40 | .49 | .67 | .85 | 50.2 | 3.86 | .50 | .69 | .88 |

## RATINGS

NOTE − For Temperatures and Capacities not shown in tables, see bulletin − Cooling Unit Rating Table Correction Factor Data in Miscellaneous Engineering Data section.

### 5 TON - LCM060U5E/P

| Entering Wet Bulb Temperature | Total Air Volume | Outdoor Air Temperature Entering Outdoor Coil | | | | | | | | | | | | | | |
|---|---|---|---|---|---|---|---|---|---|---|---|---|---|---|---|---|
| | | 65°F | | | | | 75°F | | | | | 85°F | | | | |
| | | Total Cooling Cap. | Comp. Motor Input | Sensible To Total Ratio (S/T) Dry Bulb | | | Total Cooling Cap. | Comp. Motor Input | Sensible To Total Ratio (S/T) Dry Bulb | | | Total Cooling Cap. | Comp. Motor Input | Sensible To Total Ratio (S/T) Dry Bulb | | |
| | cfm | kBtuh | kW | 75°F | 80°F | 85°F | kBtuh | kW | 75°F | 80°F | 85°F | kBtuh | kW | 75°F | 80°F | 85°F |
| 63°F | 950 | 53.8 | 2.55 | .66 | .74 | .83 | 52.0 | 2.92 | .66 | .75 | .84 | 50.3 | 3.32 | .66 | .76 | .85 |
| | 1150 | 57.5 | 2.54 | .67 | .77 | .87 | 55.5 | 2.92 | .68 | .78 | .89 | 53.6 | 3.34 | .69 | .79 | .90 |
| | 1300 | 59.7 | 2.53 | .69 | .80 | .91 | 57.6 | 2.92 | .70 | .81 | .92 | 55.7 | 3.35 | .71 | .82 | .94 |
| | 1750 | 64.7 | 2.51 | .75 | .88 | 1.00 | 62.2 | 2.91 | .76 | .90 | 1.00 | 59.9 | 3.34 | .77 | .92 | 1.00 |
| | 2050 | 66.9 | 2.50 | .79 | .94 | 1.00 | 64.6 | 2.91 | .80 | .96 | 1.00 | 62.3 | 3.34 | .82 | .98 | 1.00 |
| | 2300 | 69.0 | 2.49 | .82 | .98 | 1.00 | 66.4 | 2.90 | .84 | 1.00 | 1.00 | 64.3 | 3.34 | .85 | 1.00 | 1.00 |
| 67°F | 950 | 57.6 | 2.54 | .54 | .63 | .71 | 55.7 | 2.92 | .55 | .63 | .71 | 53.9 | 3.34 | .55 | .64 | .72 |
| | 1150 | 61.4 | 2.53 | .55 | .65 | .74 | 59.3 | 2.92 | .56 | .65 | .75 | 57.3 | 3.34 | .56 | .66 | .76 |
| | 1300 | 63.7 | 2.51 | .56 | .66 | .76 | 61.5 | 2.91 | .57 | .67 | .78 | 59.3 | 3.34 | .57 | .68 | .79 |
| | 1750 | 68.7 | 2.49 | .59 | .72 | .85 | 66.1 | 2.90 | .60 | .73 | .86 | 63.6 | 3.34 | .61 | .75 | .88 |
| | 2050 | 71.0 | 2.47 | .62 | .76 | .91 | 68.1 | 2.90 | .63 | .78 | .93 | 65.5 | 3.34 | .63 | .79 | .94 |
| | 2300 | 72.4 | 2.46 | .64 | .80 | .95 | 69.5 | 2.89 | .65 | .81 | .97 | 67.0 | 3.34 | .66 | .83 | .99 |
| 71°F | 950 | 61.6 | 2.52 | .44 | .52 | .60 | 59.7 | 2.92 | .44 | .52 | .60 | 57.7 | 3.34 | .44 | .52 | .61 |
| | 1150 | 65.7 | 2.51 | .44 | .53 | .62 | 63.5 | 2.91 | .44 | .53 | .62 | 61.3 | 3.34 | .44 | .54 | .63 |
| | 1300 | 68.1 | 2.49 | .44 | .54 | .63 | 65.7 | 2.90 | .45 | .54 | .64 | 63.3 | 3.34 | .45 | .55 | .65 |
| | 1750 | 73.2 | 2.46 | .45 | .57 | .69 | 70.4 | 2.89 | .46 | .58 | .71 | 67.8 | 3.34 | .46 | .59 | .72 |
| | 2050 | 75.5 | 2.44 | .46 | .60 | .74 | 72.6 | 2.88 | .47 | .61 | .75 | 69.9 | 3.34 | .47 | .62 | .77 |
| | 2300 | 77.0 | 2.43 | .47 | .62 | .77 | 74.0 | 2.87 | .48 | .63 | .79 | 71.1 | 3.34 | .48 | .64 | .81 |

| Entering Wet Bulb Temperature | Total Air Volume | Outdoor Air Temperature Entering Outdoor Coil | | | | | | | | | | | | | | |
|---|---|---|---|---|---|---|---|---|---|---|---|---|---|---|---|---|
| | | 95°F | | | | | 105°F | | | | | 115°F | | | | |
| | | Total Cooling Cap. | Comp. Motor Input | Sensible To Total Ratio (S/T) Dry Bulb | | | Total Cooling Cap. | Comp. Motor Input | Sensible To Total Ratio (S/T) Dry Bulb | | | Total Cooling Cap. | Comp. Motor Input | Sensible To Total Ratio (S/T) Dry Bulb | | |
| | cfm | kBtuh | kW | 75°F | 80°F | 85°F | kBtuh | kW | 75°F | 80°F | 85°F | kBtuh | kW | 75°F | 80°F | 85°F |
| 63°F | 950 | 48.6 | 3.76 | .67 | .77 | .86 | 46.9 | 4.30 | .68 | .78 | .88 | 44.8 | 4.81 | .68 | .79 | .89 |
| | 1150 | 51.7 | 3.79 | .70 | .81 | .92 | 49.7 | 4.28 | .70 | .82 | .93 | 47.5 | 4.83 | .72 | .84 | .96 |
| | 1300 | 53.6 | 3.80 | .72 | .84 | .96 | 51.4 | 4.29 | .73 | .85 | .97 | 49.1 | 4.85 | .74 | .87 | 1.00 |
| | 1750 | 57.8 | 3.84 | .78 | .93 | 1.00 | 55.3 | 4.32 | .80 | .96 | 1.00 | 52.9 | 4.88 | .82 | .98 | 1.00 |
| | 2050 | 59.9 | 3.81 | .83 | 1.00 | 1.00 | 57.7 | 4.33 | .85 | 1.00 | 1.00 | 55.4 | 4.91 | .87 | 1.00 | 1.00 |
| | 2300 | 62.1 | 3.82 | .87 | 1.00 | 1.00 | 59.8 | 4.34 | .89 | 1.00 | 1.00 | 57.3 | 4.93 | .92 | 1.00 | 1.00 |
| 67°F | 950 | 52.1 | 3.79 | .55 | .64 | .73 | 50.1 | 4.28 | .55 | .65 | .74 | 47.9 | 4.83 | .56 | .66 | .75 |
| | 1150 | 55.4 | 3.82 | .56 | .67 | .77 | 53.1 | 4.30 | .57 | .68 | .78 | 50.7 | 4.86 | .57 | .69 | .80 |
| | 1300 | 57.3 | 3.83 | .57 | .69 | .80 | 54.8 | 4.32 | .58 | .70 | .82 | 52.3 | 4.88 | .59 | .71 | .84 |
| | 1750 | 61.1 | 3.82 | .61 | .76 | .90 | 58.5 | 4.33 | .62 | .77 | .92 | 55.8 | 4.91 | .64 | .79 | .95 |
| | 2050 | 62.9 | 3.82 | .64 | .81 | .97 | 60.2 | 4.35 | .66 | .83 | .99 | 57.5 | 4.93 | .67 | .85 | 1.00 |
| | 2300 | 64.2 | 3.83 | .67 | .85 | 1.00 | 61.5 | 4.37 | .68 | .87 | 1.00 | 58.5 | 4.94 | .70 | .90 | 1.00 |
| 71°F | 950 | 55.9 | 3.82 | .44 | .53 | .61 | 53.7 | 4.31 | .44 | .53 | .62 | 51.4 | 4.87 | .44 | .54 | .63 |
| | 1150 | 59.1 | 3.82 | .45 | .54 | .64 | 56.8 | 4.33 | .45 | .55 | .65 | 54.3 | 4.90 | .45 | .55 | .66 |
| | 1300 | 61.0 | 3.82 | .45 | .55 | .66 | 58.5 | 4.33 | .45 | .56 | .67 | 56.0 | 4.91 | .45 | .57 | .68 |
| | 1750 | 65.1 | 3.83 | .46 | .60 | .73 | 62.5 | 4.36 | .47 | .61 | .75 | 59.4 | 4.94 | .47 | .62 | .77 |
| | 2050 | 67.0 | 3.83 | .48 | .63 | .78 | 64.0 | 4.37 | .48 | .64 | .80 | 61.0 | 4.95 | .49 | .66 | .82 |
| | 2300 | 68.2 | 3.84 | .49 | .66 | .83 | 65.2 | 4.37 | .49 | .67 | .85 | 61.9 | 4.96 | .50 | .69 | .87 |

## RATINGS

NOTE − For Temperatures and Capacities not shown in tables, see bulletin − Cooling Unit Rating Table Correction Factor Data in Miscellaneous Engineering Data section.

### 6 TON - LCM074U5E/P

| Entering Wet Bulb Temperature | Total Air Volume | Outdoor Air Temperature Entering Outdoor Coil | | | | | | | | | | | | | | |
|---|---|---|---|---|---|---|---|---|---|---|---|---|---|---|---|---|
| | | 65°F | | | | | 75°F | | | | | 85°F | | | | |
| | | Total Cooling Cap. | Comp. Motor Input | Sensible To Total Ratio (S/T) Dry Bulb | | | Total Cooling Cap. | Comp. Motor Input | Sensible To Total Ratio (S/T) Dry Bulb | | | Total Cooling Cap. | Comp. Motor Input | Sensible To Total Ratio (S/T) Dry Bulb | | |
| | cfm | kBtuh | kW | 75°F | 80°F | 85°F | kBtuh | kW | 75°F | 80°F | 85°F | kBtuh | kW | 75°F | 80°F | 85°F |
| 63°F | 950 | 58.6 | 3.10 | .65 | .73 | .81 | 56.7 | 3.52 | .65 | .74 | .82 | 54.9 | 4.04 | .66 | .74 | .83 |
| | 1200 | 64.0 | 3.11 | .67 | .76 | .86 | 61.8 | 3.53 | .67 | .77 | .87 | 59.6 | 3.99 | .68 | .78 | .88 |
| | 1500 | 68.8 | 3.12 | .70 | .81 | .92 | 66.1 | 3.55 | .71 | .82 | .93 | 63.7 | 4.01 | .71 | .83 | .95 |
| | 1750 | 71.6 | 3.12 | .72 | .85 | .97 | 68.9 | 3.56 | .73 | .86 | .99 | 66.5 | 4.03 | .75 | .88 | 1.00 |
| | 2050 | 74.7 | 3.12 | .76 | .90 | 1.00 | 71.9 | 3.56 | .77 | .92 | 1.00 | 69.2 | 4.05 | .78 | .93 | 1.00 |
| | 2300 | 76.6 | 3.12 | .79 | .94 | 1.00 | 73.9 | 3.57 | .80 | .96 | 1.00 | 71.2 | 4.05 | .82 | .98 | 1.00 |
| 67°F | 950 | 62.8 | 3.11 | .54 | .62 | .69 | 60.9 | 3.53 | .54 | .62 | .70 | 58.9 | 3.99 | .54 | .63 | .71 |
| | 1200 | 68.6 | 3.12 | .55 | .64 | .73 | 66.2 | 3.55 | .55 | .64 | .74 | 63.9 | 4.02 | .56 | .65 | .75 |
| | 1500 | 73.4 | 3.12 | .56 | .67 | .77 | 70.8 | 3.56 | .57 | .68 | .79 | 68.2 | 4.04 | .57 | .69 | .80 |
| | 1750 | 76.5 | 3.12 | .58 | .70 | .81 | 73.6 | 3.57 | .59 | .71 | .83 | 70.9 | 4.05 | .59 | .72 | .84 |
| | 2050 | 79.3 | 3.12 | .60 | .73 | .86 | 76.2 | 3.57 | .61 | .75 | .88 | 73.3 | 4.06 | .61 | .76 | .90 |
| | 2300 | 81.1 | 3.11 | .62 | .76 | .91 | 78.1 | 3.58 | .63 | .78 | .93 | 75.1 | 4.07 | .64 | .79 | .95 |
| 71°F | 950 | 67.5 | 3.12 | .45 | .52 | .59 | 65.4 | 3.54 | .44 | .52 | .59 | 63.3 | 4.01 | .44 | .52 | .60 |
| | 1200 | 73.5 | 3.12 | .44 | .53 | .61 | 71.0 | 3.56 | .44 | .53 | .62 | 68.6 | 4.04 | .44 | .53 | .62 |
| | 1500 | 78.6 | 3.12 | .44 | .54 | .64 | 75.8 | 3.57 | .45 | .55 | .65 | 73.0 | 4.06 | .45 | .55 | .66 |
| | 1750 | 81.7 | 3.11 | .45 | .56 | .67 | 78.7 | 3.58 | .45 | .57 | .68 | 75.8 | 4.08 | .45 | .57 | .69 |
| | 2050 | 84.5 | 3.10 | .46 | .58 | .71 | 81.4 | 3.58 | .46 | .59 | .72 | 78.4 | 4.09 | .46 | .60 | .73 |
| | 2300 | 86.6 | 3.11 | .46 | .60 | .74 | 83.3 | 3.59 | .47 | .61 | .75 | 79.9 | 4.09 | .47 | .62 | .77 |

| Entering Wet Bulb Temperature | Total Air Volume | Outdoor Air Temperature Entering Outdoor Coil | | | | | | | | | | | | | | |
|---|---|---|---|---|---|---|---|---|---|---|---|---|---|---|---|---|
| | | 95°F | | | | | 105°F | | | | | 115°F | | | | |
| | | Total Cooling Cap. | Comp. Motor Input | Sensible To Total Ratio (S/T) Dry Bulb | | | Total Cooling Cap. | Comp. Motor Input | Sensible To Total Ratio (S/T) Dry Bulb | | | Total Cooling Cap. | Comp. Motor Input | Sensible To Total Ratio (S/T) Dry Bulb | | |
| | cfm | kBtuh | kW | 75°F | 80°F | 85°F | kBtuh | kW | 75°F | 80°F | 85°F | kBtuh | kW | 75°F | 80°F | 85°F |
| 63°F | 950 | 53.1 | 4.55 | .66 | .75 | .84 | 51.1 | 5.15 | .67 | .76 | .85 | 48.9 | 5.83 | .67 | .77 | .87 |
| | 1200 | 57.5 | 4.50 | .69 | .79 | .90 | 55.3 | 5.08 | .70 | .81 | .92 | 53.0 | 5.84 | .71 | .82 | .93 |
| | 1500 | 61.5 | 4.55 | .72 | .85 | .97 | 59.0 | 5.12 | .74 | .87 | .99 | 56.3 | 5.77 | .75 | .89 | 1.00 |
| | 1750 | 64.1 | 4.58 | .76 | .90 | 1.00 | 61.4 | 5.14 | .77 | .92 | 1.00 | 58.6 | 5.80 | .79 | .94 | 1.00 |
| | 2050 | 66.7 | 4.61 | .80 | .95 | 1.00 | 63.8 | 5.17 | .81 | .98 | 1.00 | 61.1 | 5.83 | .83 | 1.00 | 1.00 |
| | 2300 | 68.6 | 4.59 | .83 | .99 | 1.00 | 66.1 | 5.19 | .85 | 1.00 | 1.00 | 63.5 | 5.86 | .87 | 1.00 | 1.00 |
| 67°F | 950 | 56.9 | 4.50 | .55 | .63 | .72 | 54.9 | 5.08 | .55 | .64 | .72 | 52.6 | 5.84 | .55 | .64 | .73 |
| | 1200 | 61.7 | 4.56 | .56 | .66 | .76 | 59.3 | 5.13 | .56 | .67 | .77 | 56.7 | 5.77 | .57 | .68 | .78 |
| | 1500 | 65.9 | 4.60 | .58 | .70 | .81 | 63.0 | 5.16 | .59 | .71 | .83 | 60.3 | 5.82 | .59 | .72 | .85 |
| | 1750 | 68.2 | 4.59 | .60 | .73 | .86 | 65.4 | 5.19 | .61 | .74 | .88 | 62.4 | 5.85 | .62 | .76 | .90 |
| | 2050 | 70.4 | 4.60 | .62 | .77 | .92 | 67.5 | 5.20 | .63 | .79 | .94 | 64.6 | 5.87 | .64 | .81 | .96 |
| | 2300 | 72.0 | 4.61 | .64 | .81 | .97 | 68.9 | 5.21 | .66 | .83 | .99 | 65.9 | 5.89 | .67 | .85 | 1.00 |
| 71°F | 950 | 61.2 | 4.55 | .44 | .52 | .60 | 58.9 | 5.12 | .44 | .52 | .61 | 56.6 | 5.77 | .44 | .53 | .61 |
| | 1200 | 66.3 | 4.61 | .44 | .54 | .63 | 63.7 | 5.17 | .45 | .54 | .64 | 61.0 | 5.83 | .45 | .55 | .65 |
| | 1500 | 70.3 | 4.60 | .45 | .56 | .67 | 67.5 | 5.20 | .45 | .57 | .68 | 64.6 | 5.88 | .45 | .57 | .69 |
| | 1750 | 72.8 | 4.62 | .46 | .58 | .70 | 69.9 | 5.22 | .46 | .59 | .72 | 66.8 | 5.90 | .46 | .60 | .73 |
| | 2050 | 75.2 | 4.64 | .47 | .61 | .75 | 72.0 | 5.24 | .47 | .62 | .76 | 68.7 | 5.92 | .48 | .63 | .78 |
| | 2300 | 76.8 | 4.65 | .48 | .63 | .78 | 73.6 | 5.28 | .48 | .64 | .80 | 70.2 | 5.94 | .49 | .66 | .82 |

## 3 TON - LCM036U5E WITH HUMIDITROL™+ OPERATING (THERMOSTAT)

| Entering Wet Bulb Temperature | Total Air Volume | Outdoor Air Temperature Entering Outdoor Coil | | | | | | | | | | | | | | | | | | | |
|---|---|---|---|---|---|---|---|---|---|---|---|---|---|---|---|---|---|---|---|---|---|
| | | 65°F | | | | | 75°F | | | | | 85°F | | | | | 95°F | | | | |
| | | Total Cool Cap. | Comp. Motor Input | Sensible To Total Ratio (S/T) Dry Bulb | | | Total Cool Cap. | Comp. Motor Input | Sensible To Total Ratio (S/T) Dry Bulb | | | Total Cool Cap. | Comp. Motor Input | Sensible To Total Ratio (S/T) Dry Bulb | | | Total Cool Cap. | Comp. Motor Input | Sensible To Total Ratio (S/T) Dry Bulb | | |
| | cfm | kBtuh | kW | 75°F | 80°F | 85°F | kBtuh | kW | 75°F | 80°F | 85°F | kBtuh | kW | 75°F | 80°F | 85°F | kBtuh | kW | 75°F | 80°F | 85°F |
| 63°F | 640 | 22.2 | 1.6 | 0.40 | 0.54 | 0.69 | 18.0 | 1.7 | 0.31 | 0.49 | 0.67 | 13.8 | 1.9 | 0.17 | 0.41 | 0.64 | 9.7 | 2.1 | -0.08 | 0.27 | 0.60 |
| | 800 | 23.9 | 1.6 | 0.43 | 0.60 | 0.77 | 19.5 | 1.7 | 0.34 | 0.57 | 0.77 | 14.1 | 1.9 | 0.19 | 0.49 | 0.77 | 9.3 | 2.1 | -0.11 | 0.34 | 0.78 |
| | 950 | 24.9 | 1.7 | 0.47 | 0.67 | 0.86 | 19.4 | 1.8 | 0.38 | 0.63 | 0.88 | 13.8 | 1.9 | 0.21 | 0.57 | 0.91 | 8.5 | 2.1 | -0.15 | 0.45 | 0.97 |
| 67°F | 640 | 25.8 | 1.6 | 0.28 | 0.40 | 0.52 | 21.5 | 1.7 | 0.18 | 0.33 | 0.48 | 17.3 | 1.9 | 0.04 | 0.23 | 0.41 | 13.2 | 2.1 | -0.19 | 0.07 | 0.31 |
| | 800 | 27.9 | 1.7 | 0.29 | 0.43 | 0.58 | 22.9 | 1.8 | 0.18 | 0.36 | 0.54 | 17.9 | 1.9 | 0.02 | 0.26 | 0.49 | 13.1 | 2.1 | -0.25 | 0.07 | 0.39 |
| | 950 | 29.3 | 1.7 | 0.31 | 0.48 | 0.64 | 23.5 | 1.8 | 0.19 | 0.40 | 0.61 | 17.9 | 2.0 | 0.01 | 0.29 | 0.56 | 12.5 | 2.2 | -0.32 | 0.08 | 0.48 |
| 71°F | 640 | 29.5 | 1.7 | 0.17 | 0.28 | 0.40 | 25.3 | 1.8 | 0.08 | 0.21 | 0.34 | 21.0 | 1.9 | -0.06 | 0.10 | 0.26 | 16.9 | 2.1 | -0.25 | -0.05 | 0.14 |
| | 800 | 32.0 | 1.7 | 0.18 | 0.31 | 0.44 | 26.9 | 1.8 | 0.07 | 0.22 | 0.38 | 21.9 | 2.0 | -0.09 | 0.10 | 0.29 | 17.1 | 2.2 | -0.32 | -0.08 | 0.17 |
| | 950 | 33.2 | 1.8 | 0.18 | 0.32 | 0.47 | 27.8 | 1.9 | 0.06 | 0.24 | 0.42 | 22.3 | 2.0 | -0.11 | 0.12 | 0.34 | 16.7 | 2.2 | -0.40 | -0.10 | 0.19 |

## 3 TON - LCM036U5E WITH HUMIDITROL™+ OPERATING (FULLY MODULATING)

| Entering Wet Bulb Temperature | Total Air Volume | Outdoor Air Temperature Entering Outdoor Coil | | | | | | | | | | | | | | | | | | | |
|---|---|---|---|---|---|---|---|---|---|---|---|---|---|---|---|---|---|---|---|---|---|
| | | 65°F | | | | | 75°F | | | | | 85°F | | | | | 95°F | | | | |
| | | Total Cool Cap. | Comp. Motor Input | Sensible To Total Ratio (S/T) Dry Bulb | | | Total Cool Cap. | Comp. Motor Input | Sensible To Total Ratio (S/T) Dry Bulb | | | Total Cool Cap. | Comp. Motor Input | Sensible To Total Ratio (S/T) Dry Bulb | | | Total Cool Cap. | Comp. Motor Input | Sensible To Total Ratio (S/T) Dry Bulb | | |
| | cfm | kBtuh | kW | 75°F | 80°F | 85°F | kBtuh | kW | 75°F | 80°F | 85°F | kBtuh | kW | 75°F | 80°F | 85°F | kBtuh | kW | 75°F | 80°F | 85°F |
| 63°F | 700 | 10.6 | 1.5 | 0.38 | 0.61 | 0.82 | 8.2 | 1.7 | 0.33 | 0.46 | 0.73 | 6.2 | 1.9 | 0.02 | 0.47 | 0.61 | 5.4 | 2.1 | -0.49 | 0.16 | 0.35 |
| | 615 | 12.5 | 1.6 | 0.37 | 0.57 | 0.77 | 10.2 | 1.7 | 0.31 | 0.42 | 0.67 | 8.2 | 1.9 | 0.01 | 0.43 | 0.55 | 5.8 | 2.1 | -0.21 | 0.22 | 0.43 |
| | 530 | 14.5 | 1.6 | 0.35 | 0.53 | 0.71 | 12.1 | 1.8 | 0.30 | 0.38 | 0.61 | 10.1 | 2.0 | -0.01 | 0.39 | 0.50 | 6.1 | 2.2 | 0.07 | 0.29 | 0.51 |
| 67°F | 575 | 16.0 | 1.6 | 0.23 | 0.33 | 0.49 | 12.9 | 1.8 | 0.19 | 0.22 | 0.41 | 10.0 | 2.0 | 0.00 | 0.10 | 0.31 | 7.3 | 2.3 | -0.38 | 0.08 | 0.12 |
| | 500 | 16.2 | 1.6 | 0.23 | 0.34 | 0.48 | 13.2 | 1.8 | 0.19 | 0.23 | 0.40 | 10.2 | 2.0 | 0.00 | 0.11 | 0.30 | 8.0 | 2.3 | -0.18 | 0.10 | 0.17 |
| | 425 | 16.5 | 1.6 | 0.23 | 0.36 | 0.48 | 13.4 | 1.8 | 0.19 | 0.24 | 0.40 | 10.5 | 2.0 | 0.00 | 0.12 | 0.30 | 8.7 | 2.3 | 0.02 | 0.12 | 0.22 |
| 71°F | 485 | 18.9 | 1.7 | 0.16 | 0.22 | 0.33 | 15.7 | 1.9 | 0.09 | 0.13 | 0.26 | 12.9 | 2.1 | -0.09 | 0.06 | 0.16 | 10.1 | 2.4 | -0.41 | 0.05 | 0.00 |
| | 435 | 18.6 | 1.6 | 0.15 | 0.23 | 0.34 | 15.4 | 1.8 | 0.08 | 0.14 | 0.27 | 12.7 | 2.1 | -0.10 | 0.08 | 0.17 | 11.2 | 2.3 | -0.23 | 0.05 | 0.07 |
| | 385 | 18.4 | 1.6 | 0.14 | 0.25 | 0.35 | 15.2 | 1.8 | 0.07 | 0.16 | 0.27 | 12.5 | 2.0 | -0.11 | 0.09 | 0.18 | 12.2 | 2.2 | -0.06 | 0.05 | 0.15 |

## 4 TON - LCM048U5E WITH HUMIDITROL™+ OPERATING (THERMOSTAT)

| Entering Wet Bulb Temperature | Total Air Volume | Outdoor Air Temperature Entering Outdoor Coil | | | | | | | | | | | | | | | | | | | |
|---|---|---|---|---|---|---|---|---|---|---|---|---|---|---|---|---|---|---|---|---|---|
| | | 65°F | | | | | 75°F | | | | | 85°F | | | | | 95°F | | | | |
| | | Total Cool Cap. | Comp. Motor Input | Sensible To Total Ratio (S/T) Dry Bulb | | | Total Cool Cap. | Comp. Motor Input | Sensible To Total Ratio (S/T) Dry Bulb | | | Total Cool Cap. | Comp. Motor Input | Sensible To Total Ratio (S/T) Dry Bulb | | | Total Cool Cap. | Comp. Motor Input | Sensible To Total Ratio (S/T) Dry Bulb | | |
| | cfm | kBtuh | kW | 75°F | 80°F | 85°F | kBtuh | kW | 75°F | 80°F | 85°F | kBtuh | kW | 75°F | 80°F | 85°F | kBtuh | kW | 75°F | 80°F | 85°F |
| 63°F | 960 | 26.1 | 2.1 | 0.41 | 0.59 | 0.78 | 20.1 | 2.3 | 0.29 | 0.54 | 0.78 | 14.0 | 2.5 | 0.07 | 0.43 | 0.78 | 8.3 | 2.7 | -0.43 | 0.19 | 0.78 |
| | 1200 | 27.8 | 2.2 | 0.46 | 0.68 | 0.90 | 20.9 | 2.3 | 0.34 | 0.64 | 0.93 | 13.9 | 2.5 | 0.10 | 0.56 | 1.00 | 6.9 | 2.8 | -0.59 | 0.33 | 1.00 |
| | 1440 | 28.7 | 2.2 | 0.51 | 0.77 | 1.00 | 21.0 | 2.4 | 0.40 | 0.76 | 1.00 | 12.9 | 2.6 | 0.15 | 0.73 | 1.00 | 5.4 | 2.8 | -0.85 | 0.65 | 1.00 |
| 67°F | 960 | 31.0 | 2.2 | 0.25 | 0.41 | 0.57 | 24.9 | 2.3 | 0.12 | 0.32 | 0.52 | 19.0 | 2.5 | -0.09 | 0.18 | 0.44 | 12.9 | 2.8 | -0.49 | -0.11 | 0.29 |
| | 1200 | 33.0 | 2.2 | 0.27 | 0.46 | 0.65 | 26.0 | 2.4 | 0.13 | 0.37 | 0.61 | 18.9 | 2.6 | -0.11 | 0.22 | 0.55 | 12.0 | 2.8 | -0.63 | -0.09 | 0.43 |
| | 1440 | 34.2 | 2.3 | 0.30 | 0.52 | 0.73 | 26.3 | 2.4 | 0.14 | 0.43 | 0.72 | 18.4 | 2.6 | -0.14 | 0.28 | 0.69 | 10.5 | 2.9 | -0.83 | -0.09 | 0.62 |
| 71°F | 960 | 36.1 | 2.2 | 0.13 | 0.27 | 0.41 | 30.0 | 2.4 | 0.00 | 0.17 | 0.34 | 23.9 | 2.6 | -0.19 | 0.02 | 0.23 | 17.9 | 2.8 | -0.52 | -0.22 | 0.06 |
| | 1200 | 38.5 | 2.3 | 0.13 | 0.29 | 0.46 | 31.3 | 2.4 | -0.01 | 0.19 | 0.39 | 24.2 | 2.6 | -0.24 | 0.02 | 0.28 | 17.2 | 2.9 | -0.65 | -0.28 | 0.09 |
| | 1440 | 39.9 | 2.3 | 0.13 | 0.32 | 0.51 | 31.9 | 2.5 | -0.02 | 0.21 | 0.45 | 23.9 | 2.7 | -0.29 | 0.02 | 0.34 | 16.0 | 2.9 | -0.82 | -0.34 | 0.14 |

## 4 TON - LCM048U5E WITH HUMIDITROL™+ OPERATING (FULLY MODULATING)

| Entering Wet Bulb Temperature | Total Air Volume | Outdoor Air Temperature Entering Outdoor Coil | | | | | | | | | | | | | | | | | | | |
|---|---|---|---|---|---|---|---|---|---|---|---|---|---|---|---|---|---|---|---|---|---|
| | | 65°F | | | | | 75°F | | | | | 85°F | | | | | 95°F | | | | |
| | | Total Cool Cap. | Comp. Motor Input | Sensible To Total Ratio (S/T) Dry Bulb | | | Total Cool Cap. | Comp. Motor Input | Sensible To Total Ratio (S/T) Dry Bulb | | | Total Cool Cap. | Comp. Motor Input | Sensible To Total Ratio (S/T) Dry Bulb | | | Total Cool Cap. | Comp. Motor Input | Sensible To Total Ratio (S/T) Dry Bulb | | |
| | cfm | kBtuh | kW | 75°F | 80°F | 85°F | kBtuh | kW | 75°F | 80°F | 85°F | kBtuh | kW | 75°F | 80°F | 85°F | kBtuh | kW | 75°F | 80°F | 85°F |
| 63°F | 690 | 10.4 | 2.4 | 0.22 | 0.54 | 0.75 | 7.5 | 2.7 | 0.20 | 0.51 | 0.68 | 4.6 | 3.0 | 0.02 | 0.42 | 0.53 | 3.7 | 2.9 | -0.68 | 0.08 | 0.55 |
| | 715 | 15.1 | 2.5 | 0.29 | 0.52 | 0.69 | 12.3 | 2.7 | 0.27 | 0.49 | 0.63 | 9.3 | 3.0 | 0.09 | 0.40 | 0.47 | 8.4 | 2.9 | -0.33 | 0.19 | 0.57 |
| | 740 | 19.9 | 2.5 | 0.36 | 0.50 | 0.64 | 17.0 | 2.8 | 0.34 | 0.47 | 0.58 | 14.1 | 3.1 | 0.16 | 0.38 | 0.42 | 13.0 | 2.9 | 0.02 | 0.31 | 0.59 |
| 67°F | 555 | 13.5 | 2.6 | 0.10 | 0.33 | 0.44 | 10.3 | 2.9 | 0.09 | 0.32 | 0.33 | 8.5 | 3.0 | -0.01 | 0.22 | 0.23 | 8.7 | 2.9 | -0.30 | 0.03 | 0.23 |
| | 640 | 15.1 | 2.8 | 0.19 | 0.31 | 0.38 | 11.8 | 3.0 | 0.17 | 0.31 | 0.28 | 10.1 | 3.2 | 0.08 | 0.20 | 0.18 | 16.0 | 2.8 | -0.19 | 0.10 | 0.34 |
| | 725 | 16.6 | 2.9 | 0.27 | 0.30 | 0.33 | 13.4 | 3.2 | 0.26 | 0.30 | 0.23 | 11.7 | 3.3 | 0.16 | 0.19 | 0.13 | 23.4 | 2.6 | -0.09 | 0.18 | 0.44 |
| 71°F | 465 | 16.2 | 2.7 | 0.17 | 0.23 | 0.27 | 13.6 | 3.0 | 0.11 | 0.22 | 0.18 | 12.9 | 3.0 | 0.01 | 0.15 | 0.15 | 12.5 | 3.0 | -0.14 | 0.02 | 0.14 |
| | 570 | 21.1 | 2.7 | 0.18 | 0.23 | 0.27 | 18.5 | 3.0 | 0.12 | 0.22 | 0.18 | 17.8 | 3.0 | 0.02 | 0.15 | 0.16 | 16.6 | 2.9 | -0.16 | 0.01 | 0.16 |
| | 675 | 26.0 | 2.7 | 0.19 | 0.24 | 0.28 | 23.4 | 3.0 | 0.13 | 0.22 | 0.19 | 22.7 | 3.0 | 0.03 | 0.15 | 0.16 | 20.7 | 2.9 | -0.18 | 0.00 | 0.18 |

## 5 TON - LCM060U5E WITH HUMIDITROL™+ OPERATING (THERMOSTAT)

| Entering Wet Bulb Temperature | Total Air Volume | Outdoor Air Temperature Entering Outdoor Coil | | | | | | | | | | | | | | | | | | | |
|---|---|---|---|---|---|---|---|---|---|---|---|---|---|---|---|---|---|---|---|---|---|
| | | 65°F | | | | | 75°F | | | | | 85°F | | | | | 95°F | | | | |
| | | Total Cool Cap. | Comp. Motor Input | Sensible To Total Ratio (S/T) Dry Bulb | | | Total Cool Cap. | Comp. Motor Input | Sensible To Total Ratio (S/T) Dry Bulb | | | Total Cool Cap. | Comp. Motor Input | Sensible To Total Ratio (S/T) Dry Bulb | | | Total Cool Cap. | Comp. Motor Input | Sensible To Total Ratio (S/T) Dry Bulb | | |
| | cfm | kBtuh | kW | 75°F | 80°F | 85°F | kBtuh | kW | 75°F | 80°F | 85°F | kBtuh | kW | 75°F | 80°F | 85°F | kBtuh | kW | 75°F | 80°F | 85°F |
| 63°F | 1080 | 31.8 | 2.9 | 0.34 | 0.52 | 0.70 | 25.5 | 3.0 | 0.23 | 0.45 | 0.67 | 19.2 | 3.3 | 0.05 | 0.34 | 0.63 | 12.9 | 3.6 | -0.32 | 0.13 | 0.57 |
| | 1350 | 34.0 | 2.9 | 0.39 | 0.59 | 0.80 | 26.6 | 3.1 | 0.27 | 0.54 | 0.80 | 19.0 | 3.4 | 0.06 | 0.44 | 0.80 | 11.4 | 3.7 | -0.42 | 0.21 | 0.81 |
| | 1620 | 35.2 | 3.0 | 0.43 | 0.67 | 0.91 | 26.8 | 3.2 | 0.31 | 0.63 | 0.93 | 18.2 | 3.4 | 0.09 | 0.56 | 0.98 | 9.7 | 3.8 | -0.56 | 0.35 | 1.00 |
| 67°F | 1080 | 37.6 | 2.9 | 0.20 | 0.35 | 0.50 | 31.1 | 3.1 | 0.08 | 0.26 | 0.44 | 24.6 | 3.4 | -0.10 | 0.13 | 0.36 | 18.2 | 3.7 | -0.41 | -0.09 | 0.22 |
| | 1350 | 40.2 | 3.0 | 0.22 | 0.39 | 0.57 | 32.6 | 3.2 | 0.09 | 0.31 | 0.52 | 24.9 | 3.5 | -0.13 | 0.16 | 0.45 | 17.3 | 3.8 | -0.52 | -0.11 | 0.31 |
| | 1620 | 41.7 | 3.1 | 0.24 | 0.44 | 0.64 | 33.1 | 3.3 | 0.09 | 0.35 | 0.61 | 24.4 | 3.5 | -0.15 | 0.20 | 0.55 | 15.7 | 3.9 | -0.66 | -0.11 | 0.43 |
| 71°F | 1080 | 43.6 | 3.0 | 0.09 | 0.22 | 0.35 | 37.0 | 3.2 | -0.02 | 0.13 | 0.28 | 30.4 | 3.5 | -0.19 | -0.01 | 0.18 | 23.8 | 3.8 | -0.45 | -0.21 | 0.03 |
| | 1350 | 46.6 | 3.2 | 0.09 | 0.24 | 0.39 | 38.9 | 3.3 | -0.04 | 0.14 | 0.32 | 31.1 | 3.6 | -0.24 | -0.01 | 0.22 | 23.3 | 3.9 | -0.57 | -0.26 | 0.04 |
| | 1620 | 48.6 | 3.2 | 0.09 | 0.27 | 0.44 | 39.8 | 3.4 | -0.06 | 0.16 | 0.37 | 30.9 | 3.7 | -0.29 | -0.01 | 0.26 | 22.1 | 4.0 | -0.71 | -0.32 | 0.07 |

## 5 TON - LCM060U5E WITH HUMIDITROL™+ OPERATING (FULLY MODULATING)

| Entering Wet Bulb Temperature | Total Air Volume | Outdoor Air Temperature Entering Outdoor Coil | | | | | | | | | | | | | | | | | | | |
|---|---|---|---|---|---|---|---|---|---|---|---|---|---|---|---|---|---|---|---|---|---|
| | | 65°F | | | | | 75°F | | | | | 85°F | | | | | 95°F | | | | |
| | | Total Cool Cap. | Comp. Motor Input | Sensible To Total Ratio (S/T) Dry Bulb | | | Total Cool Cap. | Comp. Motor Input | Sensible To Total Ratio (S/T) Dry Bulb | | | Total Cool Cap. | Comp. Motor Input | Sensible To Total Ratio (S/T) Dry Bulb | | | Total Cool Cap. | Comp. Motor Input | Sensible To Total Ratio (S/T) Dry Bulb | | |
| | cfm | kBtuh | kW | 75°F | 80°F | 85°F | kBtuh | kW | 75°F | 80°F | 85°F | kBtuh | kW | 75°F | 80°F | 85°F | kBtuh | kW | 75°F | 80°F | 85°F |
| 63°F | 1080 | 16.0 | 3.3 | 0.36 | 0.46 | 0.66 | 10.6 | 3.6 | 0.22 | 0.46 | 0.53 | 6.8 | 3.9 | 0.03 | 0.11 | 0.33 | 4.3 | 4.3 | -0.48 | -0.21 | -0.02 |
| | 1110 | 22.6 | 3.0 | 0.39 | 0.53 | 0.71 | 17.3 | 3.3 | 0.25 | 0.53 | 0.58 | 13.5 | 3.6 | 0.06 | 0.17 | 0.39 | 8.3 | 3.9 | -0.33 | 0.01 | 0.32 |
| | 1140 | 29.3 | 2.7 | 0.42 | 0.59 | 0.76 | 23.9 | 2.9 | 0.28 | 0.59 | 0.63 | 20.1 | 3.3 | 0.09 | 0.23 | 0.44 | 12.4 | 3.6 | -0.19 | 0.23 | 0.65 |
| 67°F | 680 | 18.9 | 3.4 | 0.23 | 0.17 | 0.36 | 15.2 | 3.8 | 0.12 | 0.10 | 0.28 | 11.7 | 4.1 | -0.02 | 0.11 | 0.15 | 8.2 | 4.6 | -0.25 | -0.11 | -0.07 |
| | 810 | 26.8 | 3.1 | 0.25 | 0.28 | 0.45 | 23.1 | 3.4 | 0.13 | 0.21 | 0.36 | 19.5 | 3.8 | -0.01 | 0.23 | 0.23 | 13.3 | 4.1 | -0.20 | -0.01 | 0.12 |
| | 940 | 34.6 | 2.7 | 0.26 | 0.40 | 0.53 | 30.9 | 3.0 | 0.15 | 0.33 | 0.44 | 27.4 | 3.4 | 0.01 | 0.34 | 0.31 | 18.4 | 3.7 | -0.14 | 0.09 | 0.31 |
| 71°F | 590 | 22.4 | 3.6 | 0.15 | 0.10 | 0.25 | 18.9 | 3.9 | 0.08 | 0.09 | 0.17 | 14.9 | 4.3 | -0.02 | 0.09 | 0.06 | 11.8 | 4.7 | -0.18 | 0.07 | -0.05 |
| | 685 | 30.6 | 3.1 | 0.17 | 0.20 | 0.32 | 27.0 | 3.5 | 0.10 | 0.18 | 0.25 | 23.0 | 3.9 | 0.00 | 0.18 | 0.13 | 17.6 | 4.3 | -0.16 | 0.04 | 0.06 |
| | 780 | 38.7 | 2.7 | 0.19 | 0.29 | 0.39 | 35.2 | 3.0 | 0.12 | 0.27 | 0.32 | 31.1 | 3.5 | 0.02 | 0.27 | 0.20 | 23.4 | 3.8 | -0.14 | 0.02 | 0.17 |

## 6 TON - LCM074U5E WITH HUMIDITROL™+ OPERATING (THERMOSTAT)

| Entering Wet Bulb Temperature | Total Air Volume | Outdoor Air Temperature Entering Outdoor Coil | | | | | | | | | | | | | | | | | | | |
|---|---|---|---|---|---|---|---|---|---|---|---|---|---|---|---|---|---|---|---|---|---|
| | | 65°F | | | | | 75°F | | | | | 85°F | | | | | 95°F | | | | |
| | | Total Cool Cap. | Comp. Motor Input | Sensible To Total Ratio (S/T) Dry Bulb | | | Total Cool Cap. | Comp. Motor Input | Sensible To Total Ratio (S/T) Dry Bulb | | | Total Cool Cap. | Comp. Motor Input | Sensible To Total Ratio (S/T) Dry Bulb | | | Total Cool Cap. | Comp. Motor Input | Sensible To Total Ratio (S/T) Dry Bulb | | |
| | cfm | kBtuh | kW | 75°F | 80°F | 85°F | kBtuh | kW | 75°F | 80°F | 85°F | kBtuh | kW | 75°F | 80°F | 85°F | kBtuh | kW | 75°F | 80°F | 85°F |
| 63°F | 1200 | 36.0 | 3.4 | 0.32 | 0.50 | 0.67 | 29.3 | 3.6 | 0.21 | 0.42 | 0.63 | 22.5 | 3.9 | 0.02 | 0.30 | 0.58 | 15.6 | 4.3 | -0.32 | 0.09 | 0.49 |
| | 1500 | 38.1 | 3.5 | 0.36 | 0.57 | 0.77 | 30.2 | 3.7 | 0.24 | 0.50 | 0.76 | 22.1 | 4.0 | 0.03 | 0.39 | 0.74 | 14.1 | 4.4 | -0.42 | 0.15 | 0.70 |
| | 1800 | 39.5 | 3.5 | 0.41 | 0.64 | 0.88 | 30.4 | 3.8 | 0.28 | 0.59 | 0.89 | 21.2 | 4.1 | 0.05 | 0.50 | 0.92 | 12.0 | 4.5 | -0.55 | 0.27 | 0.95 |
| 67°F | 1200 | 42.1 | 3.5 | 0.18 | 0.33 | 0.48 | 35.2 | 3.7 | 0.06 | 0.24 | 0.42 | 28.2 | 4.0 | -0.12 | 0.10 | 0.33 | 21.4 | 4.4 | -0.41 | -0.11 | 0.18 |
| | 1500 | 44.8 | 3.6 | 0.19 | 0.37 | 0.55 | 36.7 | 3.8 | 0.06 | 0.28 | 0.49 | 28.4 | 4.1 | -0.15 | 0.13 | 0.40 | 20.2 | 4.5 | -0.53 | -0.13 | 0.26 |
| | 1800 | 46.4 | 3.6 | 0.21 | 0.42 | 0.62 | 37.1 | 3.9 | 0.07 | 0.32 | 0.57 | 27.8 | 4.2 | -0.18 | 0.16 | 0.50 | 18.4 | 4.6 | -0.67 | -0.15 | 0.37 |
| 71°F | 1200 | 48.6 | 3.6 | 0.07 | 0.20 | 0.33 | 41.6 | 3.8 | -0.04 | 0.11 | 0.26 | 34.5 | 4.1 | -0.21 | -0.03 | 0.15 | 27.4 | 4.6 | -0.46 | -0.23 | 0.00 |
| | 1500 | 51.7 | 3.7 | 0.07 | 0.22 | 0.37 | 43.5 | 3.9 | -0.07 | 0.11 | 0.30 | 35.1 | 4.2 | -0.27 | -0.04 | 0.18 | 26.7 | 4.6 | -0.58 | -0.29 | 0.01 |
| | 1800 | 53.6 | 3.7 | 0.06 | 0.24 | 0.42 | 44.3 | 4.0 | -0.09 | 0.13 | 0.34 | 34.7 | 4.3 | -0.32 | -0.05 | 0.23 | 25.2 | 4.7 | -0.72 | -0.35 | 0.03 |

## 6 TON - LCM074U5E WITH HUMIDITROL™+ OPERATING (FULLY MODULATING)

| Entering Wet Bulb Temperature | Total Air Volume | Outdoor Air Temperature Entering Outdoor Coil | | | | | | | | | | | | | | | | | | | |
|---|---|---|---|---|---|---|---|---|---|---|---|---|---|---|---|---|---|---|---|---|---|
| | | 65°F | | | | | 75°F | | | | | 85°F | | | | | 95°F | | | | |
| | | Total Cool Cap. | Comp. Motor Input | Sensible To Total Ratio (S/T) Dry Bulb | | | Total Cool Cap. | Comp. Motor Input | Sensible To Total Ratio (S/T) Dry Bulb | | | Total Cool Cap. | Comp. Motor Input | Sensible To Total Ratio (S/T) Dry Bulb | | | Total Cool Cap. | Comp. Motor Input | Sensible To Total Ratio (S/T) Dry Bulb | | |
| | cfm | kBtuh | kW | 75°F | 80°F | 85°F | kBtuh | kW | 75°F | 80°F | 85°F | kBtuh | kW | 75°F | 80°F | 85°F | kBtuh | kW | 75°F | 80°F | 85°F |
| 63°F | 1120 | 16.2 | 4.1 | 0.36 | 0.43 | 0.57 | 15.5 | 4.1 | 0.21 | 0.43 | 0.54 | 15.0 | 4.1 | -0.20 | 0.25 | 0.56 | 11.6 | 4.4 | -0.45 | -0.20 | 0.40 |
| | 1170 | 24.7 | 3.7 | 0.38 | 0.50 | 0.66 | 23.9 | 3.7 | 0.22 | 0.50 | 0.62 | 23.5 | 3.7 | -0.18 | 0.33 | 0.65 | 12.7 | 4.4 | -0.47 | -0.08 | 0.48 |
| | 1220 | 33.2 | 3.3 | 0.39 | 0.57 | 0.75 | 32.4 | 3.3 | 0.24 | 0.57 | 0.71 | 32.0 | 3.3 | -0.17 | 0.40 | 0.74 | 13.8 | 4.4 | -0.50 | 0.04 | 0.57 |
| 67°F | 890 | 22.2 | 4.3 | 0.18 | 0.25 | 0.31 | 22.8 | 4.2 | 0.10 | 0.24 | 0.31 | 22.4 | 4.1 | -0.03 | 0.12 | 0.32 | 17.8 | 4.5 | -0.21 | -0.10 | 0.17 |
| | 920 | 31.3 | 3.8 | 0.19 | 0.30 | 0.41 | 31.9 | 3.7 | 0.11 | 0.29 | 0.41 | 31.5 | 3.7 | -0.02 | 0.17 | 0.42 | 19.5 | 4.5 | -0.23 | -0.05 | 0.21 |
| | 950 | 40.5 | 3.4 | 0.20 | 0.36 | 0.51 | 41.1 | 3.3 | 0.12 | 0.35 | 0.51 | 40.7 | 3.2 | -0.01 | 0.23 | 0.52 | 21.2 | 4.5 | -0.25 | 0.01 | 0.26 |
| 71°F | 790 | 29.9 | 4.2 | 0.15 | 0.18 | 0.23 | 29.2 | 4.1 | 0.08 | 0.15 | 0.24 | 26.7 | 4.2 | 0.00 | 0.06 | 0.21 | 21.6 | 4.6 | -0.08 | -0.07 | 0.10 |
| | 785 | 37.0 | 3.8 | 0.15 | 0.22 | 0.29 | 36.3 | 3.7 | 0.09 | 0.19 | 0.31 | 33.8 | 3.8 | 0.00 | 0.10 | 0.28 | 24.0 | 4.6 | -0.11 | -0.03 | 0.12 |
| | 780 | 44.1 | 3.4 | 0.16 | 0.26 | 0.36 | 43.4 | 3.3 | 0.09 | 0.23 | 0.37 | 40.9 | 3.4 | 0.01 | 0.14 | 0.35 | 26.5 | 4.6 | -0.13 | 0.01 | 0.15 |

## BLOWER DATA 1.5 HP

**BLOWER TABLE INCLUDES RESISTANCE FOR BASE UNIT ONLY WITH DRY INDOOR COIL AND AIR FILTERS IN PLACE.**

FOR ALL UNITS ADD:
1 - Any factory installed options air resistance (heat section, economizer, etc.).
2 - Any field installed accessories air resistance (duct resistance, diffuser, etc.).

See Page 30 for wet coil and options/accessory air resistance data. See Page 30 for minimum air volume with electric heat.

**DOWNFLOW**

| Total Air cfm | Total Static Pressure - in. w.g. | | | | | | | | | | | | | | | | | | | | | | | | | |
|---|---|---|---|---|---|---|---|---|---|---|---|---|---|---|---|---|---|---|---|---|---|---|---|---|---|---|
| | 0.1 | | 0.2 | | 0.3 | | 0.4 | | 0.5 | | 0.6 | | 0.7 | | 0.8 | | 0.9 | | 1.0 | | 1.1 | | 1.2 | | 1.3 | |
| | RPM | Watts | RPM | Watts | RPM | Watts | RPM | Watts | RPM | Watts | RPM | Watts | RPM | Watts | RPM | Watts | RPM | Watts | RPM | Watts | RPM | Watts | RPM | Watts | RPM | Watts |
| 400 | - - - | - - - | 734 | 19 | 823 | 40 | 910 | 60 | 985 | 78 | - - - | - - - | - - - | - - - | - - - | - - - | - - - | - - - | - - - | - - - | - - - | - - - | - - - | - - - | - - - | - - - |
| 600 | 766 | 28 | 856 | 51 | 944 | 73 | 1029 | 93 | 1108 | 111 | 1180 | 127 | 1248 | 139 | 1315 | 149 | 1383 | 158 | 1451 | 169 | - - - | - - - | - - - | - - - | - - - | - - - |
| 800 | 899 | 57 | 989 | 81 | 1079 | 104 | 1163 | 125 | 1242 | 145 | 1317 | 161 | 1386 | 174 | 1454 | 185 | 1519 | 198 | 1582 | 214 | 1643 | 234 | 1701 | 255 | 1755 | 281 |
| 1000 | 1084 | 95 | 1163 | 117 | 1244 | 139 | 1323 | 160 | 1398 | 180 | 1470 | 196 | 1538 | 211 | 1603 | 227 | 1663 | 245 | 1721 | 267 | 1776 | 292 | 1828 | 320 | 1876 | 350 |
| 1200 | 1319 | 113 | 1385 | 138 | 1451 | 162 | 1517 | 186 | 1581 | 209 | 1644 | 231 | 1703 | 254 | 1759 | 278 | 1812 | 306 | 1863 | 337 | 1912 | 367 | 1960 | 397 | 2003 | 427 |
| 1400 | 1542 | 146 | 1596 | 177 | 1649 | 208 | 1703 | 239 | 1757 | 269 | 1809 | 300 | 1860 | 331 | 1909 | 362 | 1956 | 393 | 2003 | 425 | 2050 | 456 | 2095 | 483 | 2139 | 508 |
| 1600 | 1721 | 225 | 1772 | 258 | 1823 | 291 | 1873 | 324 | 1923 | 356 | 1972 | 388 | 2019 | 419 | 2065 | 450 | 2110 | 480 | 2156 | 510 | 2200 | 539 | 2244 | 565 | 2287 | 590 |
| 1800 | 1909 | 309 | 1957 | 341 | 2006 | 373 | 2054 | 404 | 2101 | 435 | 2146 | 465 | 2190 | 495 | 2234 | 526 | 2277 | 557 | 2320 | 588 | 2362 | 620 | 2404 | 651 | 2444 | 685 |
| 2000 | 2103 | 385 | 2148 | 417 | 2193 | 450 | 2239 | 483 | 2283 | 516 | 2325 | 550 | 2367 | 584 | 2408 | 620 | 2449 | 658 | 2490 | 696 | 2529 | 735 | 2568 | 777 | 2605 | 822 |
| 2200 | 2299 | 478 | 2342 | 514 | 2384 | 552 | 2426 | 590 | 2467 | 630 | 2507 | 671 | 2547 | 714 | 2586 | 757 | 2625 | 800 | 2663 | 844 | 2700 | 889 | 2735 | 935 | 2770 | 982 |
| 2400 | 2500 | 606 | 2540 | 647 | 2580 | 690 | 2618 | 734 | 2656 | 779 | 2694 | 824 | 2731 | 870 | 2768 | 915 | 2804 | 961 | 2839 | 1006 | 2874 | 1051 | 2907 | 1096 | 2941 | 1141 |
| 2600 | 2704 | 768 | 2741 | 810 | 2778 | 855 | 2813 | 901 | 2849 | 947 | 2884 | 993 | 2918 | 1039 | 2952 | 1085 | 2986 | 1129 | 3019 | 1173 | 3051 | 1217 | 3083 | 1259 | 3115 | 1300 |
| 2800 | 2908 | 941 | 2943 | 985 | 2976 | 1030 | 3010 | 1076 | 3042 | 1121 | 3075 | 1166 | 3107 | 1210 | 3139 | 1253 | 3170 | 1296 | 3200 | 1338 | 3231 | 1379 | 3261 | 1419 | 3290 | 1456 |
| 3000 | 3110 | 1111 | 3142 | 1156 | 3173 | 1201 | 3205 | 1245 | 3236 | 1289 | 3267 | 1332 | 3296 | 1373 | 3325 | 1414 | 3354 | 1455 | 3382 | 1496 | 3412 | 1536 | 3439 | 1573 | 3465 | 1609 |

| Total Air cfm | Total Static Pressure - in. w.g. | | | | | | | | | | | | | |
|---|---|---|---|---|---|---|---|---|---|---|---|---|---|---|
| | 1.4 | | 1.5 | | 1.6 | | 1.7 | | 1.8 | | 1.9 | | 2.0 | |
| | RPM | Watts | RPM | Watts | RPM | Watts | RPM | Watts | RPM | Watts | RPM | Watts | RPM | Watts |
| 800 | 1805 | 309 | 1850 | 337 | 1895 | 366 | 1940 | 392 | - - - | - - - | - - - | - - - | - - - | - - - |
| 1000 | 1920 | 380 | 1962 | 410 | 2005 | 439 | 2050 | 466 | 2094 | 492 | 2138 | 517 | 2181 | 541 |
| 1200 | 2045 | 456 | 2087 | 484 | 2130 | 510 | 2174 | 537 | 2217 | 563 | 2260 | 589 | 2302 | 615 |
| 1400 | 2182 | 531 | 2225 | 555 | 2268 | 581 | 2310 | 610 | 2352 | 640 | 2393 | 671 | 2433 | 703 |
| 1600 | 2330 | 616 | 2371 | 645 | 2412 | 678 | 2452 | 713 | 2491 | 750 | 2530 | 787 | 2568 | 824 |
| 1800 | 2484 | 723 | 2523 | 765 | 2561 | 808 | 2598 | 849 | 2636 | 890 | 2672 | 931 | 2708 | 971 |
| 2000 | 2641 | 868 | 2677 | 915 | 2713 | 961 | 2749 | 1003 | 2784 | 1044 | 2819 | 1084 | 2853 | 1124 |
| 2200 | 2804 | 1028 | 2839 | 1072 | 2873 | 1114 | 2907 | 1155 | 2940 | 1194 | 2973 | 1234 | 3006 | 1272 |
| 2400 | 2974 | 1184 | 3006 | 1225 | 3039 | 1266 | 3071 | 1305 | 3103 | 1344 | 3134 | 1382 | 3166 | 1420 |
| 2600 | 3146 | 1340 | 3177 | 1379 | 3207 | 1417 | 3238 | 1456 | 3269 | 1494 | 3299 | 1532 | 3329 | 1569 |
| 2800 | 3319 | 1493 | 3347 | 1530 | 3376 | 1567 | 3406 | 1605 | 3435 | 1643 | 3465 | 1681 | 3495 | 1718 |
| 3000 | 3491 | 1644 | 3517 | 1680 | 3543 | 1716 | 3572 | 1754 | 3602 | 1792 | 3631 | 1830 | 3661 | 1867 |

## BLOWER DATA 1.5 HP

**BLOWER TABLE INCLUDES RESISTANCE FOR BASE UNIT ONLY WITH DRY INDOOR COIL AND AIR FILTERS IN PLACE.**

FOR ALL UNITS ADD:
1 - Any factory installed options air resistance (heat section, economizer, etc.).
2 - Any field installed accessories air resistance (duct resistance, diffuser, etc.).

See Page 30 for wet coil and options/accessory air resistance data. See Page 30 for minimum air volume with electric heat.

**HORIZONTAL**

| Total Air cfm | Total Static Pressure - in. w.g. | | | | | | | | | | | | | | | | | | | | | | | | | |
|---|---|---|---|---|---|---|---|---|---|---|---|---|---|---|---|---|---|---|---|---|---|---|---|---|---|---|
| | 0.1 | | 0.2 | | 0.3 | | 0.4 | | 0.5 | | 0.6 | | 0.7 | | 0.8 | | 0.9 | | 1.0 | | 1.1 | | 1.2 | | 1.3 | |
| | RPM | Watts | RPM | Watts | RPM | Watts | RPM | Watts | RPM | Watts | RPM | Watts | RPM | Watts | RPM | Watts | RPM | Watts | RPM | Watts | RPM | Watts | RPM | Watts | RPM | Watts |
| 400 | 708 | 16 | 793 | 37 | 872 | 53 | - - - | - - - | - - - | - - - | - - - | - - - | - - - | - - - | - - - | - - - | - - - | - - - | - - - | - - - | - - - | - - - | - - - | - - - | - - - | - - - |
| 600 | 835 | 46 | 918 | 65 | 1000 | 82 | 1077 | 95 | 1149 | 107 | 1221 | 109 | - - - | - - - | - - - | - - - | - - - | - - - | - - - | - - - | - - - | - - - | - - - | - - - | - - - | - - - |
| 800 | 981 | 75 | 1064 | 92 | 1144 | 109 | 1221 | 124 | 1294 | 139 | 1365 | 148 | 1434 | 154 | 1497 | 163 | 1555 | 179 | 1607 | 200 | 1656 | 226 | 1704 | 254 | - - - | - - - |
| 1000 | 1166 | 105 | 1241 | 124 | 1315 | 141 | 1387 | 159 | 1454 | 176 | 1520 | 191 | 1582 | 207 | 1638 | 227 | 1689 | 252 | 1737 | 279 | 1783 | 308 | 1829 | 335 | 1873 | 362 |
| 1200 | 1374 | 142 | 1440 | 162 | 1506 | 182 | 1569 | 203 | 1630 | 224 | 1687 | 246 | 1739 | 271 | 1787 | 299 | 1832 | 330 | 1876 | 361 | 1920 | 391 | 1964 | 419 | 2007 | 444 |
| 1400 | 1591 | 183 | 1647 | 209 | 1701 | 235 | 1755 | 263 | 1806 | 291 | 1854 | 320 | 1899 | 351 | 1942 | 382 | 1984 | 412 | 2026 | 442 | 2068 | 469 | 2110 | 496 | 2153 | 520 |
| 1600 | 1778 | 258 | 1827 | 290 | 1876 | 323 | 1923 | 355 | 1970 | 386 | 2015 | 416 | 2059 | 444 | 2102 | 470 | 2144 | 494 | 2185 | 519 | 2227 | 545 | 2268 | 572 | 2309 | 600 |
| 1800 | 1973 | 352 | 2018 | 383 | 2063 | 415 | 2107 | 445 | 2151 | 476 | 2194 | 504 | 2237 | 531 | 2279 | 557 | 2319 | 584 | 2359 | 613 | 2397 | 645 | 2435 | 679 | 2471 | 713 |
| 2000 | 2182 | 437 | 2224 | 468 | 2265 | 499 | 2306 | 531 | 2346 | 563 | 2385 | 596 | 2424 | 630 | 2461 | 666 | 2496 | 705 | 2530 | 745 | 2564 | 786 | 2598 | 826 | 2631 | 866 |
| 2200 | 2388 | 540 | 2426 | 576 | 2464 | 613 | 2500 | 651 | 2536 | 691 | 2571 | 731 | 2605 | 774 | 2637 | 819 | 2668 | 863 | 2700 | 907 | 2732 | 949 | 2764 | 990 | 2795 | 1029 |
| 2400 | 2589 | 679 | 2624 | 719 | 2658 | 761 | 2691 | 803 | 2724 | 846 | 2756 | 890 | 2786 | 935 | 2816 | 980 | 2846 | 1025 | 2876 | 1068 | 2907 | 1109 | 2937 | 1149 | 2967 | 1188 |
| 2600 | 2787 | 845 | 2819 | 887 | 2850 | 930 | 2881 | 973 | 2911 | 1017 | 2941 | 1060 | 2970 | 1104 | 2999 | 1147 | 3028 | 1189 | 3057 | 1230 | 3087 | 1270 | - - - | - - - | - - - | - - - |
| 2800 | 2983 | 1021 | 3013 | 1063 | 3042 | 1106 | 3070 | 1149 | 3099 | 1191 | - - - | - - - | - - - | - - - | - - - | - - - | - - - | - - - | - - - | - - - | - - - | - - - | - - - | - - - | - - - | - - - |

| Total Air cfm | Total Static Pressure - in. w.g. | | | | | | | | | | | | | |
|---|---|---|---|---|---|---|---|---|---|---|---|---|---|---|
| | 1.4 | | 1.5 | | 1.6 | | 1.7 | | 1.8 | | 1.9 | | 2.0 | |
| | RPM | Watts | RPM | Watts | RPM | Watts | RPM | Watts | RPM | Watts | RPM | Watts | RPM | Watts |
| 800 | - - - | - - - | - - - | - - - | - - - | - - - | - - - | - - - | - - - | - - - | - - - | - - - | - - - | - - - |
| 1000 | 1916 | 386 | 1957 | 408 | 1998 | 428 | 2037 | 447 | 2077 | 465 | - - - | - - - | - - - | - - - |
| 1200 | 2049 | 468 | 2089 | 490 | 2128 | 510 | 2168 | 529 | 2207 | 549 | 2246 | 569 | 2285 | 591 |
| 1400 | 2194 | 543 | 2235 | 565 | 2274 | 588 | 2313 | 611 | 2350 | 637 | 2387 | 664 | 2423 | 694 |
| 1600 | 2349 | 627 | 2387 | 657 | 2423 | 688 | 2457 | 722 | 2490 | 757 | 2522 | 793 | 2554 | 830 |
| 1800 | 2506 | 749 | 2539 | 787 | 2571 | 825 | 2602 | 864 | 2632 | 903 | 2662 | 942 | 2692 | 981 |
| 2000 | 2663 | 906 | 2694 | 945 | 2725 | 985 | 2755 | 1024 | 2785 | 1063 | 2815 | 1101 | 2845 | 1138 |
| 2200 | 2826 | 1068 | 2857 | 1107 | 2887 | 1146 | 2916 | 1184 | 2946 | 1221 | 2975 | 1259 | 3005 | 1296 |
| 2400 | 2997 | 1227 | 3027 | 1266 | 3056 | 1304 | 3085 | 1342 | - - - | - - - | - - - | - - - | - - - | - - - |
| 2600 | - - - | - - - | - - - | - - - | - - - | - - - | - - - | - - - | - - - | - - - | - - - | - - - | - - - | - - - |
| 2800 | - - - | - - - | - - - | - - - | - - - | - - - | - - - | - - - | - - - | - - - | - - - | - - - | - - - | - - - |

## BLOWER DATA

### FACTORY INSTALLED OPTIONS/FIELD INSTALLED ACCESSORY AIR RESISTANCE - in. w.g.

| Air Volume cfm | Wet Indoor Coil | Humiditrol® Condenser Reheat Coil | Electric Heat | Economizer | Filters | | |
|---|---|---|---|---|---|---|---|
| | | | | | MERV 8 | MERV 13 | MERV 16 |
| 800 | 0.01 | - - - | 0.01 | 0.04 | 0.04 | 0.05 | 0.04 |
| 1000 | 0.02 | 0.00 | 0.03 | 0.04 | 0.04 | 0.07 | 0.05 |
| 1200 | 0.04 | 0.00 | 0.06 | 0.04 | 0.04 | 0.07 | 0.05 |
| 1400 | 0.05 | 0.01 | 0.09 | 0.04 | 0.04 | 0.07 | 0.06 |
| 1600 | 0.07 | 0.02 | 0.12 | 0.04 | 0.04 | 0.07 | 0.08 |
| 1800 | 0.08 | 0.02 | 0.15 | 0.05 | 0.04 | 0.07 | 0.09 |
| 2000 | 0.10 | 0.02 | 0.18 | 0.05 | 0.05 | 0.08 | 0.10 |
| 2200 | 0.11 | 0.04 | 0.18 | 0.05 | 0.05 | 0.08 | 0.11 |
| 2400 | 0.13 | 0.04 | 0.20 | 0.05 | 0.05 | 0.08 | 0.12 |

### MINIMUM AIR VOLUME REQUIRED FOR ELECTRIC HEAT

| kW Size | Minimum CFM |
|---|---|
| | DirectPlus™ Direct Drive ECM |
| 7.5 | 1200 |
| 15 | 1350 |
| 22.5 | 1800 |
| 30 | 2000 |

### POWER EXHAUST FAN PERFORMANCE

| Return Air System Static Pressure in. w.g. | Air Volume Exhausted cfm |
|---|---|
| 0.00 | 2000 |
| 0.05 | 1990 |
| 0.10 | 1924 |
| 0.15 | 1810 |
| 0.20 | 1664 |
| 0.25 | 1507 |
| 0.30 | 1350 |
| 0.35 | 1210 |

## BLOWER DATA

### CEILING DIFFUSERS AIR RESISTANCE (in. w.g.)

| Air Volume cfm | RTD9-65S Step–Down Diffuser | | | FD9-65S Flush Diffuser | RTD11-95S Step–Down Diffuser | | | FD11-95S Flush Diffuser |
|---|---|---|---|---|---|---|---|---|
| | 2 Ends Open | 1 Side & 2 Ends Open | All Ends & Sides Open | | 2 Ends Open | 1 Side & 2 Ends Open | All Ends & Sides Open | |
| 800 | 0.15 | 0.13 | 0.11 | 0.11 | - - - | - - - | - - - | - - - |
| 1000 | 0.19 | 0.16 | 0.14 | 0.14 | - - - | - - - | - - - | - - - |
| 1200 | 0.25 | 0.20 | 0.17 | 0.17 | - - - | - - - | - - - | - - - |
| 1400 | 0.33 | 0.26 | 0.20 | 0.20 | - - - | - - - | - - - | - - - |
| 1600 | 0.43 | 0.32 | 0.20 | 0.24 | - - - | - - - | - - - | - - - |
| 1800 | 0.56 | 0.40 | 0.30 | 0.30 | 0.13 | 0.11 | 0.09 | 0.09 |
| 2000 | 0.73 | 0.50 | 0.36 | 0.36 | 0.15 | 0.13 | 0.11 | 0.10 |
| 2200 | 0.95 | 0.63 | 0.44 | 0.44 | 0.18 | 0.15 | 0.12 | 0.12 |
| 2400 | - - - | - - - - | - - - | - - - | 0.21 | 0.18 | 0.15 | 0.14 |
| 2600 | - - - | - - - - | - - - | - - - | 0.24 | 0.21 | 0.18 | 0.17 |
| 2800 | - - - | - - - - | - - - | - - - | 0.27 | 0.24 | 0.21 | 0.20 |
| 3000 | - - - | - - - - | - - - | - - - | 0.32 | 0.29 | 0.25 | 0.25 |

### CEILING DIFFUSER AIR THROW DATA

| Air Volume - cfm | [1] Effective Throw - ft. | |
|---|---|---|
| **Model** | **RTD9-65S** | **FD9-65S** |
| 800 | 10 - 17 | 14 - 18 |
| 1000 | 10 - 17 | 15 - 20 |
| 1200 | 11 - 18 | 16 - 22 |
| 1400 | 12 - 19 | 17 - 24 |
| 1600 | 12 - 20 | 18 - 25 |
| 1800 | 13 - 21 | 20 - 28 |
| 2000 | 14 - 23 | 21 - 29 |
| 2200 | 16 - 25 | 22 - 30 |
| **Model** | **RTD11-95S** | **FD11-95S** |
| 2600 | 24 - 29 | 19 - 24 |
| 2800 | 25 - 30 | 20 - 28 |
| 3000 | 27 - 33 | 21 - 29 |

[1] Effective throw based on terminal velocities of 75 ft. per minute.

## ELECTRICAL/ELECTRIC HEAT DATA — 3 TON

| Model | | LCM036U5E / LCM036U5P | | |
|---|---|---|---|---|
| [1] Voltage - 60Hz | | 208/230V-3ph | 460V-3ph | 575V-3ph |
| Compressor (Inverter) | Rated Load Amps | 9.1 | 5.1 | 4.1 |
| | Locked Rotor Amps | 11 | 6 | 12 |
| Outdoor Fan Motor | Full Load Amps (1 ECM) | 2.8 | 1.4 | 1.1 |
| Power Exhaust (1) 0.33 HP | Full Load Amps | 2.4 | 1.3 | 1 |
| Service Outlet 115V GFI (amps) | | 15 | 15 | 20 |
| Indoor Blower Motor | HP | 1.5 | 1.5 | 1.5 |
| | Full Load Amps | 4.4 | 2.3 | 2.3 |
| [2] Maximum Overcurrent Protection (MOCP) | Unit Only | 25 | 15 | 15 |
| | With (1) 0.33 HP Power Exhaust | 30 | 15 | 15 |
| [3] Minimum Circuit Ampacity (MCA) | Unit Only | 19 | 11 | 9 |
| | With (1) 0.33 HP Power Exhaust | 21 | 12 | 10 |

### ELECTRIC HEAT DATA

| Electric Heat Voltage | | | 208V | 240V | 480V | 600V |
|---|---|---|---|---|---|---|
| [2] Maximum Overcurrent Protection (MOCP) | Unit+ Electric Heat | 7.5 kW | 30 | 30 | 15 | 15 |
| | | 15 kW | [4] **45** | 60 | 30 | 25 |
| [3] Minimum Circuit Ampacity (MCA) | Unit+ Electric Heat | 7.5 kW | 26 | 29 | 15 | 12 |
| | | 15 kW | 45 | 51 | 26 | 21 |
| [2] Maximum Overcurrent Protection (MOCP) | Unit+ Electric Heat and (1) 0.33 HP Power Exhaust | 7.5 kW | 30 | 35 | 20 | 15 |
| | | 15 kW | [4] **50** | 60 | 30 | 25 |
| [3] Minimum Circuit Ampacity (MCA) | Unit+ Electric Heat and (1) 0.33 HP Power Exhaust | 7.5 kW | 29 | 32 | 16 | 14 |
| | | 15 kW | 48 | 54 | 28 | 23 |

### ELECTRICAL ACCESSORIES

| | | | | | |
|---|---|---|---|---|---|
| **Disconnect** | 7.5 kW | **22A23** | **22A23** | **22A23** | **22A23** |
| | 15 kW | **22A23** | **22A23** | **22A23** | **22A23** |

**Disconnects - 22A23** - 80A

NOTE - All units have a minimum Short Circuit Current Rating (SCCR) of 5000 amps.

[1] Extremes of operating range are plus and minus 10% of line voltage.

[2] HACR type breaker or fuse.

[3] Refer to National or Canadian Electrical Code manual to determine wire, fuse and disconnect size requirements.

[4] Factory installed circuit breaker not available.

## ELECTRICAL/ELECTRIC HEAT DATA — 4 TON

| Model | | LCM048U5E / LCM048U5P | | |
|---|---|---|---|---|
| [1] Voltage - 60Hz | | 208/230V-3ph | 460V-3ph | 575V-3ph |
| Compressor (Inverter) | Rated Load Amps | 13.8 | 6.5 | 5.5 |
| | Locked Rotor Amps | 17 | 10 | 12 |
| Outdoor Fan Motor | Full Load Amps (1 ECM) | 2.8 | 1.4 | 1.1 |
| Power Exhaust (1) 0.33 HP | Full Load Amps | 2.4 | 1.3 | 1 |
| Service Outlet 115V GFI (amps) | | 15 | 15 | 20 |
| Indoor Blower Motor | HP | 1.5 | 1.5 | 1.5 |
| | Full Load Amps | 4.4 | 2.3 | 2.3 |
| [2] Maximum Overcurrent Protection (MOCP) | Unit Only | 35 | 15 | 15 |
| | With (1) 0.33 HP Power Exhaust | 40 | 15 | 15 |
| [3] Minimum Circuit Ampacity (MCA) | Unit Only | 25 | 12 | 11 |
| | With (1) 0.33 HP Power Exhaust | 27 | 14 | 12 |

### ELECTRIC HEAT DATA

| Electric Heat Voltage | | | 208V | 240V | 480V | 600V |
|---|---|---|---|---|---|---|
| [2] Maximum Overcurrent Protection (MOCP) | Unit+ Electric Heat | 7.5 kW | 35 | 35 | 15 | 15 |
| | | 15 kW | [4] **45** | 60 | 30 | 25 |
| [3] Minimum Circuit Ampacity (MCA) | Unit+ Electric Heat | 7.5 kW | 26 | 29 | 15 | 12 |
| | | 15 kW | 45 | 51 | 26 | 22 |
| [2] Maximum Overcurrent Protection (MOCP) | Unit+ Electric Heat and (1) 0.33 HP Power Exhaust | 7.5 kW | 40 | 40 | 20 | 15 |
| | | 15 kW | [4] **50** | 60 | 30 | 25 |
| [3] Minimum Circuit Ampacity (MCA) | Unit+ Electric Heat and (1) 0.33 HP Power Exhaust | 7.5 kW | 29 | 32 | 16 | 14 |
| | | 15 kW | 48 | 54 | 28 | 23 |

### ELECTRICAL ACCESSORIES

| | | | | | |
|---|---|---|---|---|---|
| **Disconnect** | 7.5 kW | **22A23** | **22A23** | **22A23** | **22A23** |
| | 15 kW | **22A23** | **22A23** | **22A23** | **22A23** |

**Disconnects - 22A23** - 80A

NOTE - All units have a minimum Short Circuit Current Rating (SCCR) of 5000 amps.

[1] Extremes of operating range are plus and minus 10% of line voltage.

[2] HACR type breaker or fuse.

[3] Refer to National or Canadian Electrical Code manual to determine wire, fuse and disconnect size requirements.

[4] Factory installed circuit breaker not available.

## ELECTRICAL/ELECTRIC HEAT DATA — 5 TON

| Model | | LCM060U5E / LCM060U5P | | |
|---|---|---|---|---|
| [1] Voltage - 60Hz | | 208/230V-3ph | 460V-3ph | 575V-3ph |
| Compressor (Inverter) | Rated Load Amps | 14.6 | 7 | 5.8 |
| | Locked Rotor Amps | 21 | 11 | 12 |
| Outdoor Fan Motor | Full Load Amps (1 ECM) | 2.8 | 1.4 | 1.1 |
| Power Exhaust (1) 0.33 HP | Full Load Amps | 2.4 | 1.3 | 1 |
| Service Outlet 115V GFI (amps) | | 15 | 15 | 20 |
| Indoor Blower Motor | HP | 1.5 | 1.5 | 1.5 |
| | Full Load Amps | 4.4 | 2.3 | 2.3 |
| [2] Maximum Overcurrent Protection (MOCP) | Unit Only | 40 | 15 | 15 |
| | With (1) 0.33 HP Power Exhaust | 40 | 20 | 15 |
| [3] Minimum Circuit Ampacity (MCA) | Unit Only | 26 | 13 | 11 |
| | With (1) 0.33 HP Power Exhaust | 28 | 14 | 12 |

### ELECTRIC HEAT DATA

| Electric Heat Voltage | | | 208V | 240V | 480V | 600V |
|---|---|---|---|---|---|---|
| [2] Maximum Overcurrent Protection (MOCP) | Unit+ Electric Heat | 7.5 kW | 40 | 40 | 15 | 15 |
| | | 15 kW | [4] **45** | 60 | 30 | 25 |
| | | 22.5 kW | [4] **70** | 80 | 40 | 30 |
| [3] Minimum Circuit Ampacity (MCA) | Unit+ Electric Heat | 7.5 kW | 26 | 29 | 15 | 12 |
| | | 15 kW | 45 | 51 | 26 | 21 |
| | | 22.5 kW | 65 | 74 | 37 | 30 |
| [2] Maximum Overcurrent Protection (MOCP) | Unit+ Electric Heat and (1) 0.33 HP Power Exhaust | 7.5 kW | 40 | 40 | 20 | 15 |
| | | 15 kW | [4] **50** | 60 | 30 | 25 |
| | | 22.5 kW | 70 | 80 | 40 | 35 |
| [3] Minimum Circuit Ampacity (MCA) | Unit+ Electric Heat and (1) 0.33 HP Power Exhaust | 7.5 kW | 29 | 32 | 16 | 14 |
| | | 15 kW | 48 | 54 | 28 | 23 |
| | | 22.5 kW | 68 | 77 | 39 | 32 |

### ELECTRICAL ACCESSORIES

| | | | | | |
|---|---|---|---|---|---|
| **Disconnect** | 7.5 kW | **22A23** | **22A23** | **22A23** | **22A23** |
| | 15 kW | **22A23** | **22A23** | **22A23** | **22A23** |
| | 22.5 kW | **22A24** | **22A24** | **22A23** | **22A23** |

**Disconnects - 22A23** - 80A
**22A24** - 150A

NOTE - All units have a minimum Short Circuit Current Rating (SCCR) of 5000 amps.

[1] Extremes of operating range are plus and minus 10% of line voltage.

[2] HACR type breaker or fuse.

[3] Refer to National or Canadian Electrical Code manual to determine wire, fuse and disconnect size requirements.

[4] Factory installed circuit breaker not available.

## ELECTRICAL/ELECTRIC HEAT DATA — 6 TON

| Model | | LCM074U5E / LCM074U5P | | |
|---|---|---|---|---|
| [1] Voltage - 60Hz | | 208/230V-3ph | 460V-3ph | 575V-3ph |
| Compressor (Inverter) | Rated Load Amps | 16.9 | 8.3 | 6.8 |
| | Locked Rotor Amps | 21 | 11 | 12 |
| Outdoor Fan Motor | Full Load Amps (1 ECM) | 2.8 | 1.4 | 1.1 |
| Power Exhaust (1) 0.33 HP | Full Load Amps | 2.4 | 1.3 | 1 |
| Service Outlet 115V GFI (amps) | | 15 | 15 | 20 |
| Indoor Blower Motor | HP | 1.5 | 1.5 | 1.5 |
| | Full Load Amps | 4.4 | 2.3 | 2.3 |
| [2] Maximum Overcurrent Protection (MOCP) | Unit Only | 45 | 20 | 15 |
| | With (1) 0.33 HP Power Exhaust | 45 | 20 | 15 |
| [3] Minimum Circuit Ampacity (MCA) | Unit Only | 29 | 15 | 12 |
| | With (1) 0.33 HP Power Exhaust | 31 | 16 | 13 |

### ELECTRIC HEAT DATA

| Electric Heat Voltage | | | 208V | 240V | 480V | 600V |
|---|---|---|---|---|---|---|
| [2] Maximum Overcurrent Protection (MOCP) | Unit+ Electric Heat | 7.5 kW | 45 | 45 | 20 | 15 |
| | | 15 kW | [4] **45** | 60 | 30 | 25 |
| | | 22.5 kW | [4] **70** | 80 | 40 | 30 |
| | | 30 kW | [4] **90** | 100 | 50 | 40 |
| [3] Minimum Circuit Ampacity (MCA) | Unit+ Electric Heat | 7.5 kW | 29 | 29 | 15 | 12 |
| | | 15 kW | 45 | 51 | 26 | 21 |
| | | 22.5 kW | 65 | 74 | 37 | 30 |
| | | 30 kW | 84 | 96 | 48 | 39 |
| [2] Maximum Overcurrent Protection (MOCP) | Unit+ Electric Heat and (1) 0.33 HP Power Exhaust | 7.5 kW | 45 | 45 | 20 | 15 |
| | | 15 kW | [4] **50** | 60 | 30 | 25 |
| | | 22.5 kW | [4] **70** | 80 | 40 | 35 |
| | | 30 kW | [4] **90** | 100 | 50 | 45 |
| [3] Minimum Circuit Ampacity (MCA) | Unit+ Electric Heat and (1) 0.33 HP Power Exhaust | 7.5 kW | 31 | 32 | 16 | 14 |
| | | 15 kW | 48 | 54 | 28 | 23 |
| | | 22.5 kW | 68 | 77 | 39 | 32 |
| | | 30 kW | 87 | 99 | 50 | 41 |

### ELECTRICAL ACCESSORIES

| | | | | | |
|---|---|---|---|---|---|
| **Disconnect** | 7.5 kW | **22A23** | **22A23** | **22A23** | **22A23** |
| | 15 kW | **22A23** | **22A23** | **22A23** | **22A23** |
| | 22.5 kW | **22A24** | **22A24** | **22A23** | **22A23** |
| | 30 kW | **22A24** | **22A24** | **22A23** | **22A23** |

**Disconnects - 22A23** - 80A
**22A24** - 150A

NOTE - All units have a minimum Short Circuit Current Rating (SCCR) of 5000 amps.

[1] Extremes of operating range are plus and minus 10% of line voltage.
[2] HACR type breaker or fuse.
[3] Refer to National or Canadian Electrical Code manual to determine wire, fuse and disconnect size requirements.
[4] Factory installed circuit breaker not available.

## ELECTRIC HEAT CAPACITIES

| Volts Input | 7.5 kW | | | 15 kW | | | 22.5 kW | | | 30 kW | | |
|---|---|---|---|---|---|---|---|---|---|---|---|---|
| | kW Input | Btuh Output | Stages | kW Input | Btuh Output | Stages | kW Input | Btuh Output | Stages | kW Input | Btuh Output | Stages |
| 208 | 5.6 | 19,100 | 1 | 11.3 | 38,600 | 1 | 16.9 | 57,700 | 1 | 22.5 | 76,800 | 1 |
| 220 | 6.3 | 21,500 | 1 | 12.6 | 43,000 | 1 | 18.9 | 64,500 | 1 | 25.2 | 86,000 | 1 |
| 230 | 6.9 | 23,600 | 1 | 13.8 | 47,100 | 1 | 20.7 | 70,700 | 1 | 27.5 | 93,900 | 1 |
| 240 | 7.5 | 25,600 | 1 | 15.0 | 51,200 | 1 | 22.5 | 76,800 | 1 | 30.0 | 102,400 | 1 |
| 440 | 6.9 | 21,500 | 1 | 12.6 | 43,000 | 1 | 18.9 | 64,500 | 1 | 25.2 | 86,000 | 1 |
| 460 | 6.9 | 23,600 | 1 | 13.8 | 47,100 | 1 | 20.7 | 70,700 | 1 | 27.5 | 93,900 | 1 |
| 480 | 7.5 | 25,600 | 1 | 15.0 | 51,200 | 1 | 22.5 | 76,800 | 1 | 30.0 | 102,400 | 1 |
| 550 | 6.3 | 21,500 | 1 | 12.6 | 43,000 | 1 | 18.9 | 64,500 | 1 | 25.2 | 86,000 | 1 |
| 575 | 6.9 | 23,600 | 1 | 13.8 | 47,100 | 1 | 20.7 | 70,700 | 1 | 27.5 | 93,900 | 1 |
| 600 | 7.5 | 25,600 | 1 | 15.0 | 51,200 | 1 | 22.5 | 76,800 | 1 | 30.0 | 102,400 | 1 |

**FIELD WIRING NOTES**

- For use with copper wiring only
- Field wiring not furnished
- All wiring must conform to NEC or CEC and local electrical codes
- For specific wiring information, please refer to the installation instructions

## UNIT CLEARANCES

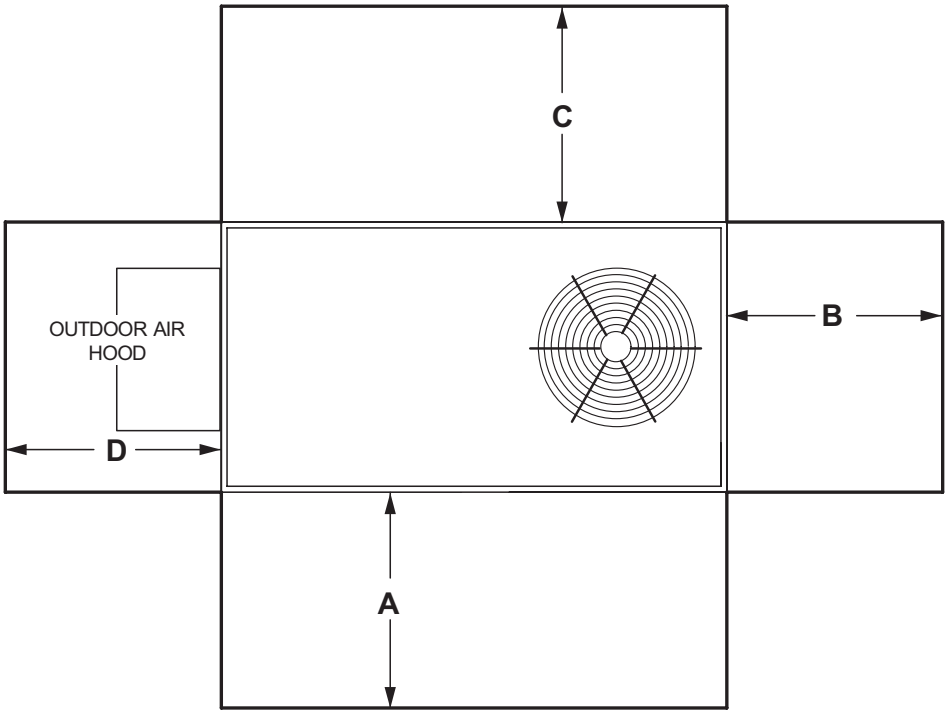


| [1] Unit Clearance | A | | B | | C | | D | | Top Clearance |
|---|---|---|---|---|---|---|---|---|---|
| | in. | mm | in. | mm | in. | mm | in. | mm | |
| Service Clearance | 36 | 914 | 36 | 914 | 36 | 934 | 36 | 914 | Unobstructed |
| Minimum Operation Clearance | 36 | 914 | 36 | 914 | 36 | 914 | 36 | 914 | |

NOTE - Entire perimeter of unit base requires support when elevated above the mounting surface.

[1] Service Clearance - Required for removal of serviceable parts.
Minimum Operation Clearance - Required clearance for proper unit operation.

## OUTDOOR SOUND DATA

| Size | Octave Band Sound Power Levels dBA, re $10^{-12}$ Watts Center Frequency - Hz | | | | | | | [1, 2] Sound Rating Number dBA |
|---|---|---|---|---|---|---|---|---|
| | 125 | 250 | 500 | 1000 | 2000 | 4000 | 8000 | |
| 036 | 60 | 65 | 69 | 68 | 63 | 58 | 51 | 73 |
| 048 | 64 | 67 | 73 | 71 | 66 | 59 | 52 | 76 |
| 060 | 66 | 69 | 74 | 74 | 68 | 62 | 55 | 78 |
| 074 | 67 | 72 | 76 | 76 | 70 | 64 | 58 | 80 |

NOTE - The octave sound power data does not include tonal corrections.

[1] 1 Sound Rating Number according to AHRI Standard 270-2008. Sound Rating Number is the overall A-Weighted Sound Power Level, (LWA), dB (100 Hz to 10,000 Hz).

[2] 2 Sound Rating Number according to AHRI Standard 370-2011. Sound Rating Number is the overall A-Weighted Sound Power Level, (LWA), dB (100 Hz to 10,000 Hz).

## WEIGHT DATA — UNIT

| Size | Net | | Shipping | |
|---|---|---|---|---|
| | lbs. | kg | lbs. | kg |
| 036 Base Unit | 598 | 271 | 658 | 298 |
| 036 Max. Unit | 795 | 361 | 855 | 388 |
| 048 Base Unit | 616 | 279 | 676 | 307 |
| 048 Max. Unit | 813 | 369 | 873 | 396 |
| 060 Base Unit | 616 | 279 | 676 | 307 |
| 060 Max. Unit | 816 | 370 | 876 | 397 |
| 074 Base Unit | 616 | 279 | 676 | 307 |
| 074 Max. Unit | 816 | 370 | 876 | 397 |

## FACTORY / FIELD INSTALLED OPTIONS AND ACCESSORIES - NET WEIGHTS

| Description | | lbs. | kg |
|---|---|---|---|
| **ECONOMIZER / OUTDOOR AIR / EXHAUST** | | | |
| **Economizer** | | | |
| Economizer, Includes Combination Outdoor Air Hood and Barometric Relief Dampers | | 84 | 38 |
| **Outdoor Air Dampers** | | | |
| Motorized | | 40 | 18 |
| Manual | | 30 | 14 |
| **Power Exhaust** | | | |
| Standard Static | | 35 | 17 |
| **ELECTRIC HEAT** | | | |
| 7.5 kW | | 31 | 14 |
| 15 kW | | 31 | 14 |
| 22.5 kW | | 35 | 16 |
| 30 kW | | 35 | 16 |
| **COMBINATION COIL/HAIL GUARDS** | | | |
| All models | | 31 | 14 |
| **ROOF CURBS** | | | |
| **Hybrid Roof Curbs, Downflow** | | | |
| 8 in. height | | 86 | 39 |
| 14 in. height | | 108 | 49 |
| 18 in. height | | 125 | 57 |
| 24 in. height | | 147 | 67 |
| **Adjustable Pitch Curb, Downflow** | | | |
| 14 in. height | | 147 | 67 |
| **CEILING DIFFUSERS** | | | |
| Step-Down | RTD9-65S | 80 | 36 |
| | RTD11-95S | 118 | 54 |
| Flush | FD9-65S | 80 | 36 |
| | FD11-95S | 118 | 54 |
| Transitions (Supply and Return) | T1TRAN10AN1 | 22 | 10 |
| | T1TRAN20N-1 | 21 | 10 |
| **HUMIDITROL™+ HOT GAS REHEAT SYSTEM** | | | |
| Humiditrol®+ Dehumidification Option | | 27 | 12 |

| CORNER WEIGHTS | | | | | | | | | CENTER OF GRAVITY | | | |
|---|---|---|---|---|---|---|---|---|---|---|---|---|
| Model | AA | | BB | | CC | | DD | | EE | | FF | |
| | lbs. | kg | lbs. | kg | lbs. | kg | lbs. | kg | in. | mm | in. | mm |
| LCM036 Base Unit | 124 | 56 | 153 | 69 | 208 | 94 | 170 | 77 | 38-1/4 | 972 | 19-7/8 | 505 |
| LCM036 Max. Unit | 165 | 75 | 202 | 92 | 276 | 125 | 225 | 102 | 39-3/4 | 1010 | 19-7/8 | 505 |
| LCM048 Base Unit | 124 | 56 | 152 | 69 | 208 | 94 | 169 | 77 | 38-1/4 | 972 | 19-7/8 | 505 |
| LCM048 Max. Unit | 165 | 75 | 203 | 92 | 277 | 126 | 225 | 102 | 39-3/4 | 1010 | 19-7/8 | 505 |
| LCM060 Base Unit | 124 | 56 | 153 | 69 | 208 | 94 | 170 | 77 | 38-1/4 | 972 | 19-7/8 | 505 |
| LCM060 Max. Unit | 165 | 75 | 203 | 92 | 277 | 126 | 226 | 103 | 39-3/4 | 1010 | 19-7/8 | 505 |
| LCM074 Base Unit | 124 | 56 | 153 | 69 | 208 | 94 | 170 | 77 | 38-1/4 | 972 | 19-7/8 | 505 |
| LCM074 Max Unit | 165 | 75 | 203 | 92 | 277 | 126 | 226 | 103 | 39-3/4 | 1010 | 19-7/8 | 505 |

Base Unit - The unit with NO INTERNAL OPTIONS.

Max. Unit - The unit with ALL INTERNAL OPTIONS Installed. (Economizer, Standard Static Power Exhaust Fans, Controls, etc.). Does not include accessories external to unit or high static power exhaust.

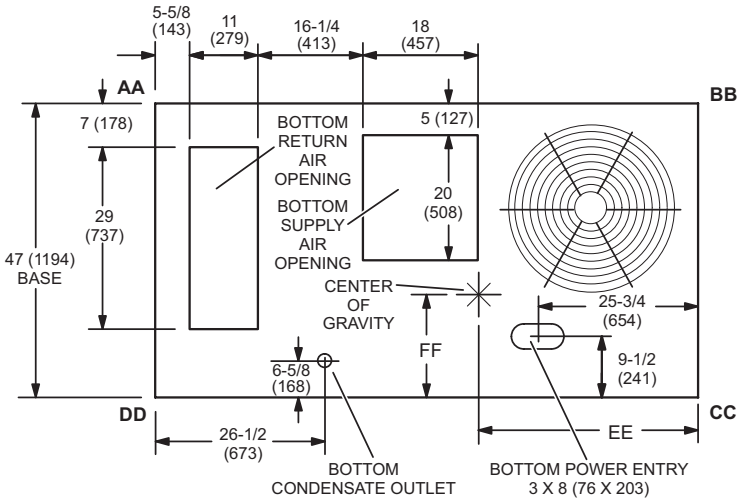


TOP VIEW (Base)

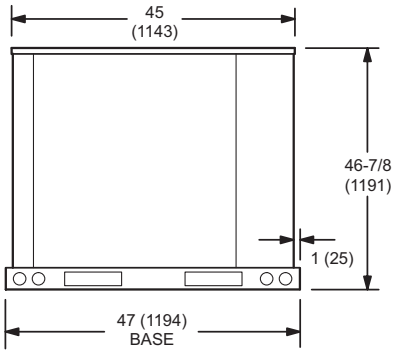


END VIEW

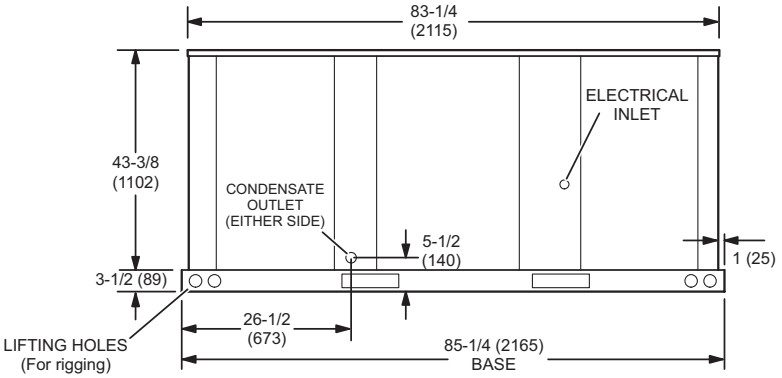


SIDE VIEW

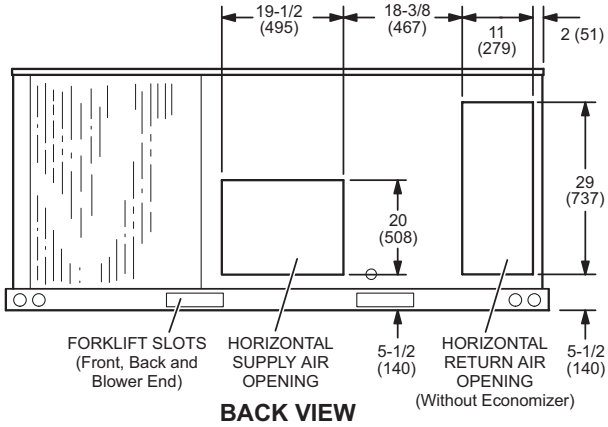


BACK VIEW

**COMBINATION OUTDOOR AIR HOOD DETAIL FOR OPTIONAL ECONOMIZER AND BAROMETRIC RELIEF DAMPERS (Furnished With Economizer for Downflow Applications)**

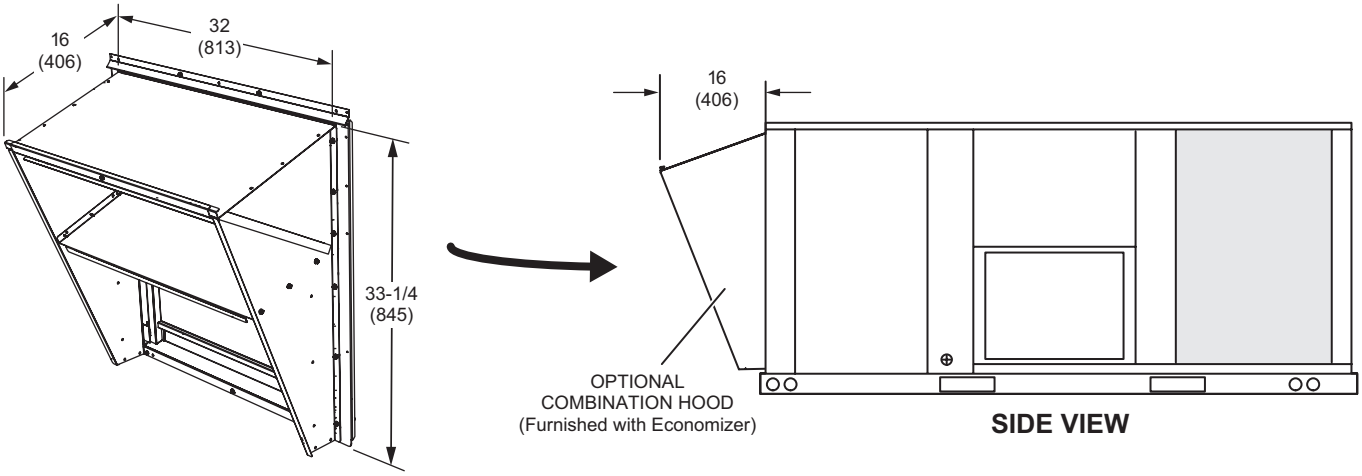


**OUTDOOR AIR DAMPER HOOD DETAIL (Downflow or Horizontal Applications)**

**MANUAL OUTDOOR AIR HOOD**

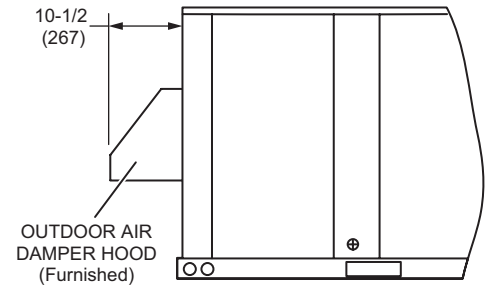


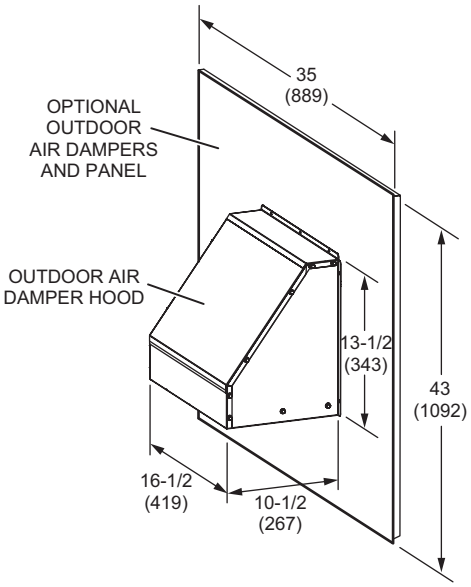


**MOTORIZED OUTDOOR AIR HOOD**

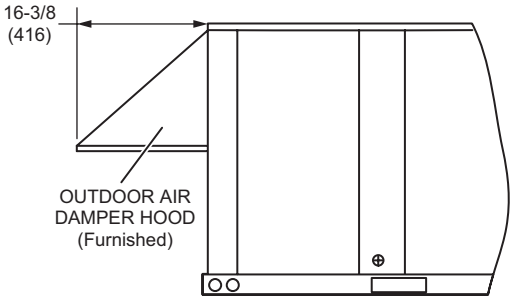


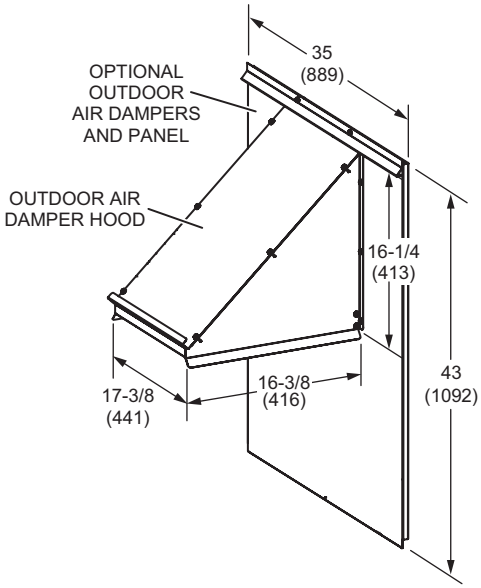

## HORIZONTAL ECONOMIZER APPLICATIONS - OUTDOOR AIR HOOD DETAIL WITH OPTIONAL ECONOMIZER DAMPERS AND OPTIONAL HORIZONTAL BAROMETRIC RELIEF DAMPERS AND HOOD

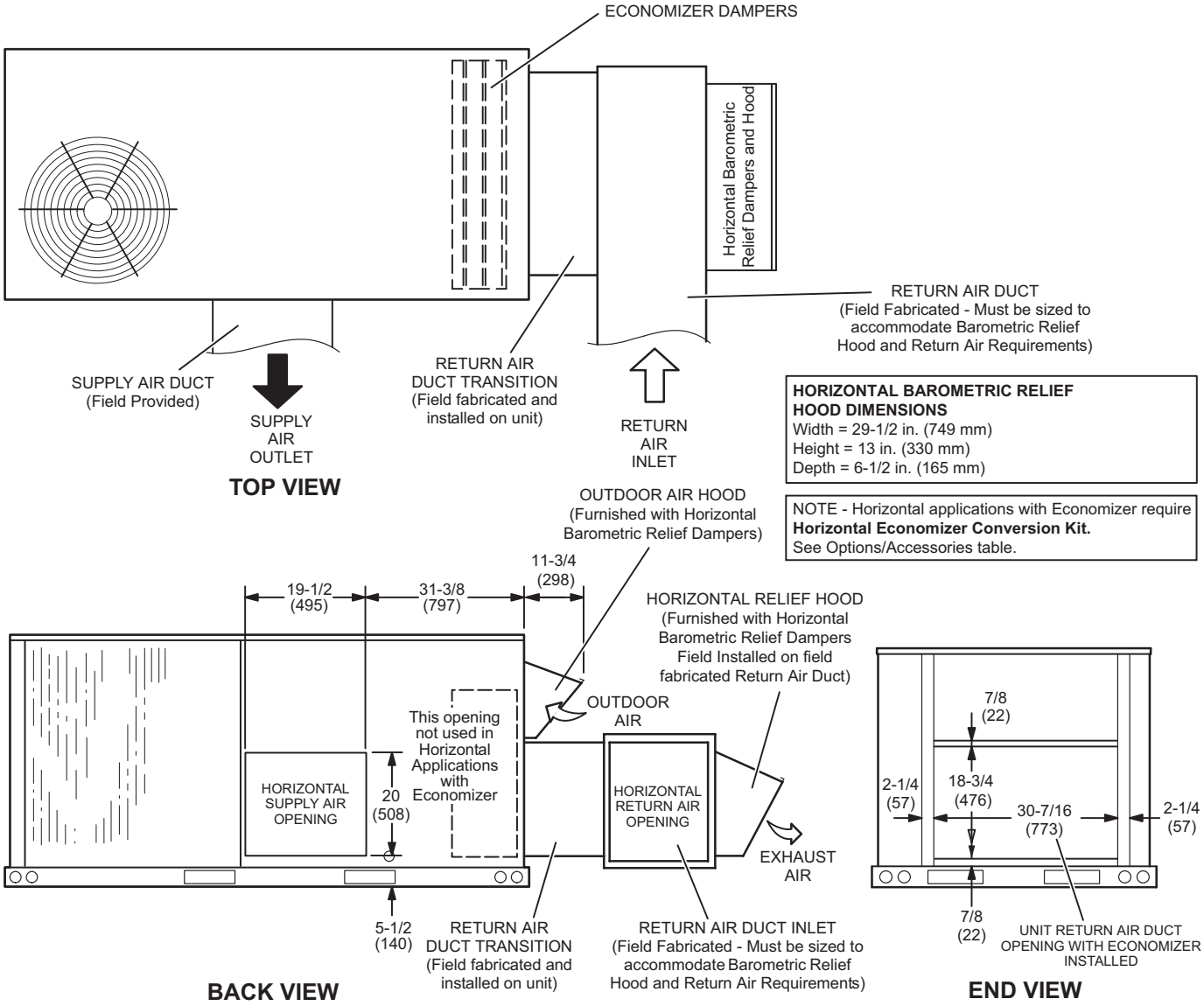


**NOTE** - Return Air Duct and Transition must be supported.

## HYBRID ROOF CURBS - DOUBLE DUCT OPENING

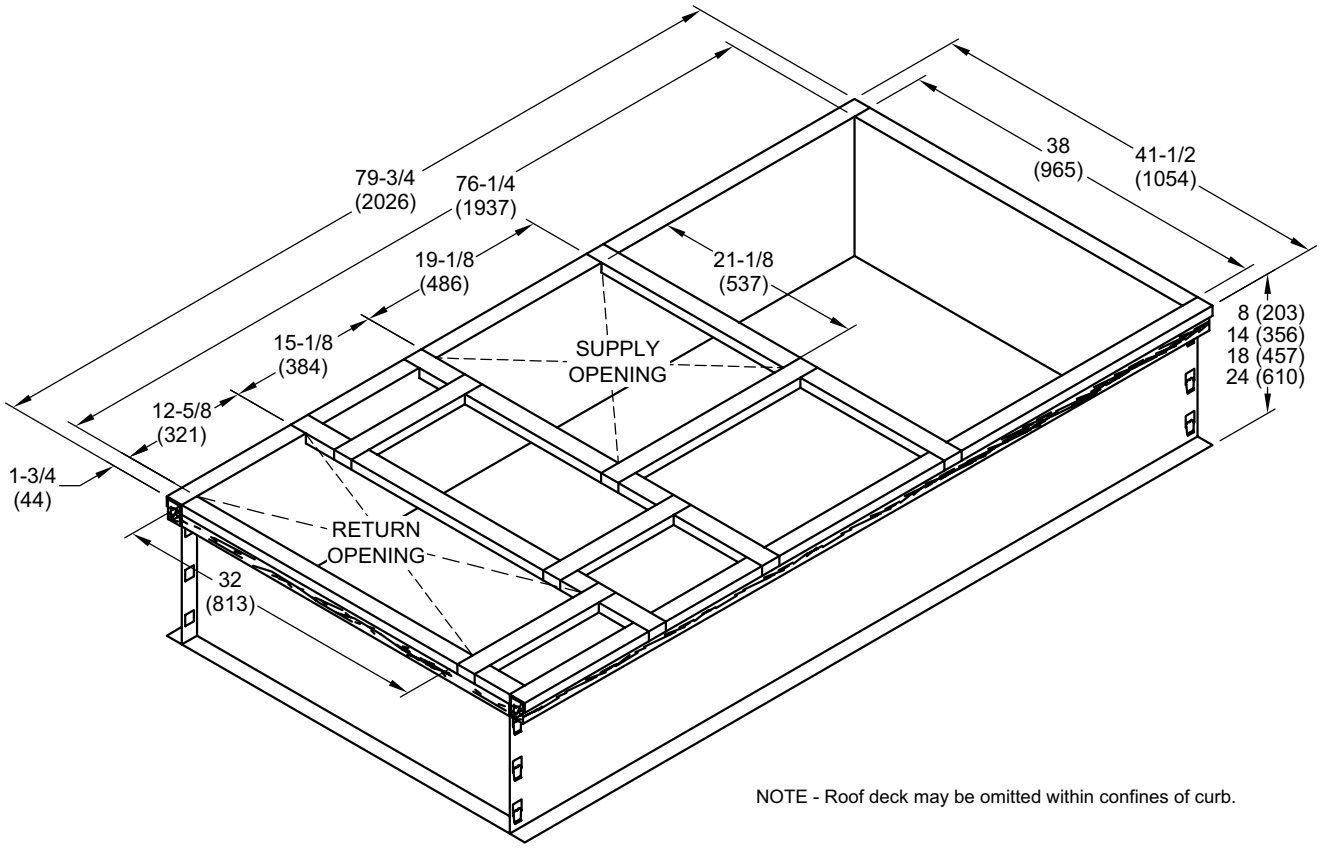


NOTE - Roof deck may be omitted within confines of curb.

### TYPICAL FLASHING DETAIL FOR ROOF CURB

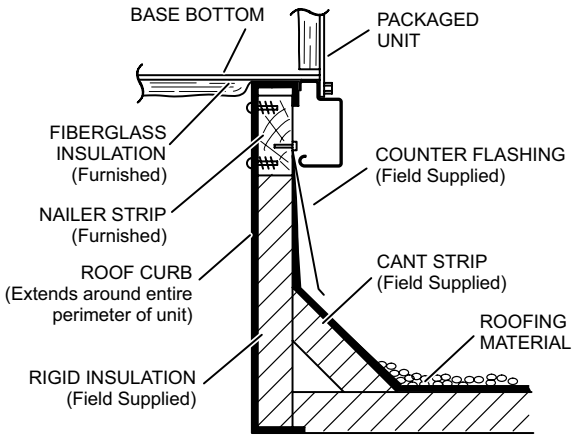


### DETAIL ROOF CURB

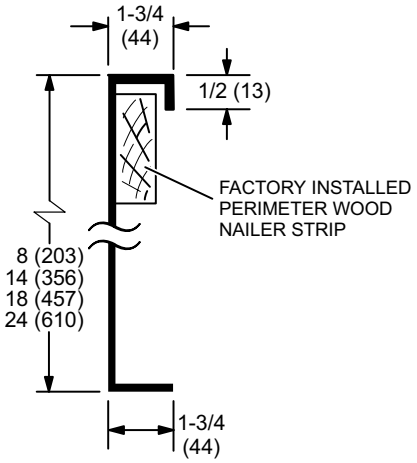

## ADJUSTABLE PITCH CURBS - DOUBLE DUCT OPENING

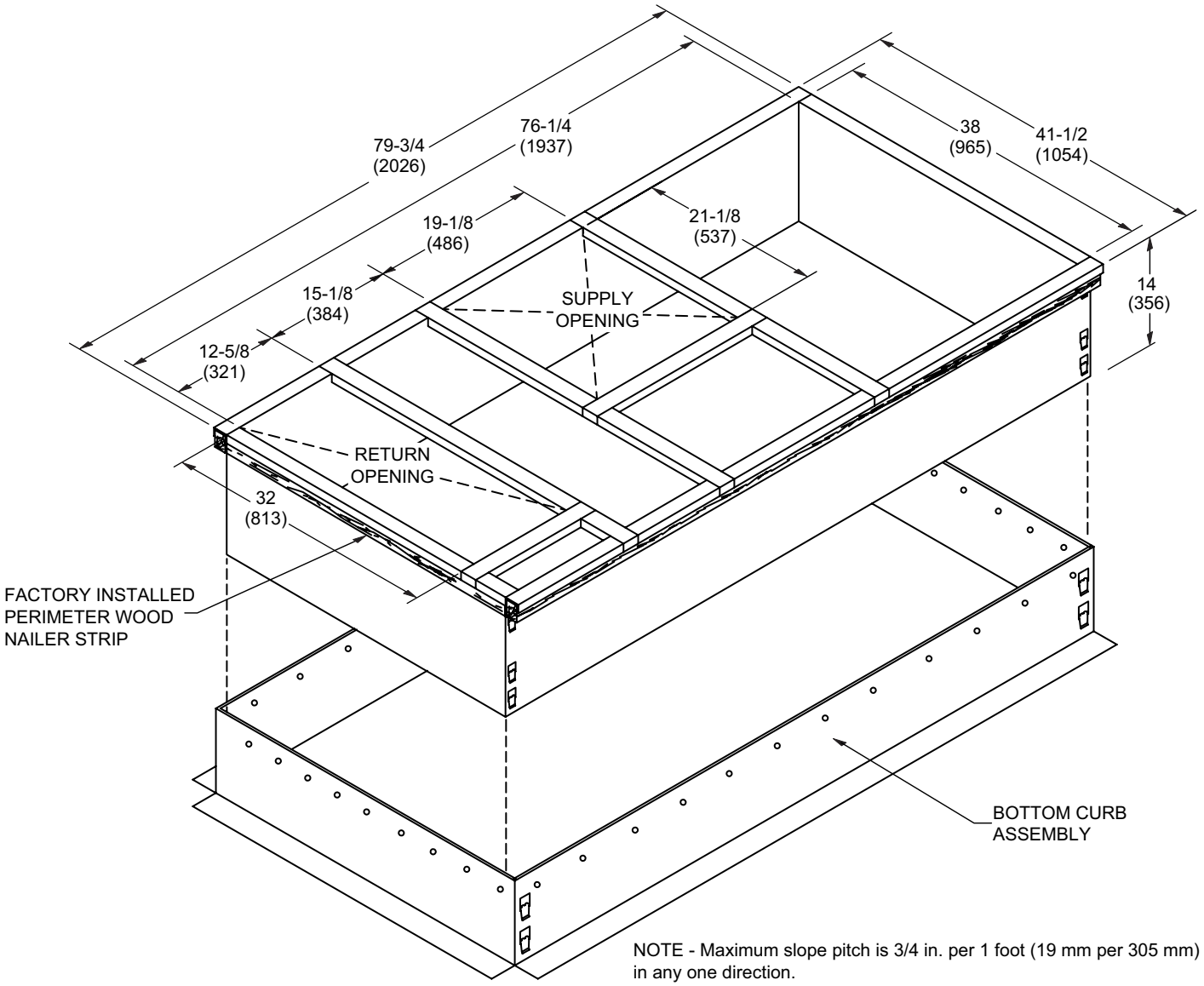


NOTE - Maximum slope pitch is 3/4 in. per 1 foot (19 mm per 305 mm) in any one direction.

### TYPICAL FLASHING DETAIL FOR ROOF CURB

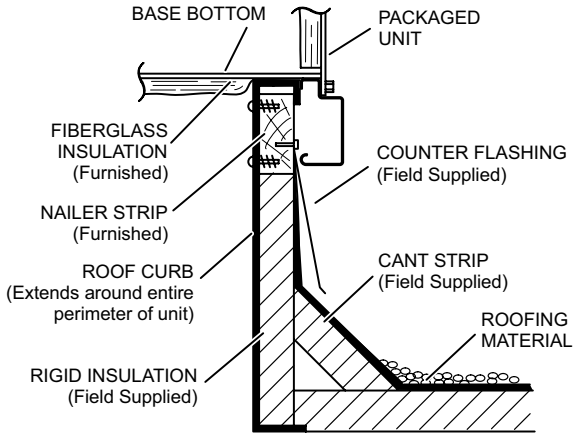


### DETAIL ROOF CURB

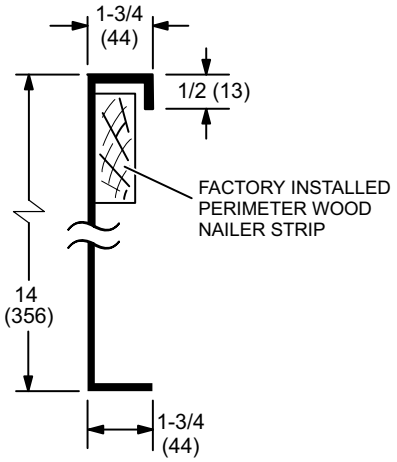

## TRANSITIONS

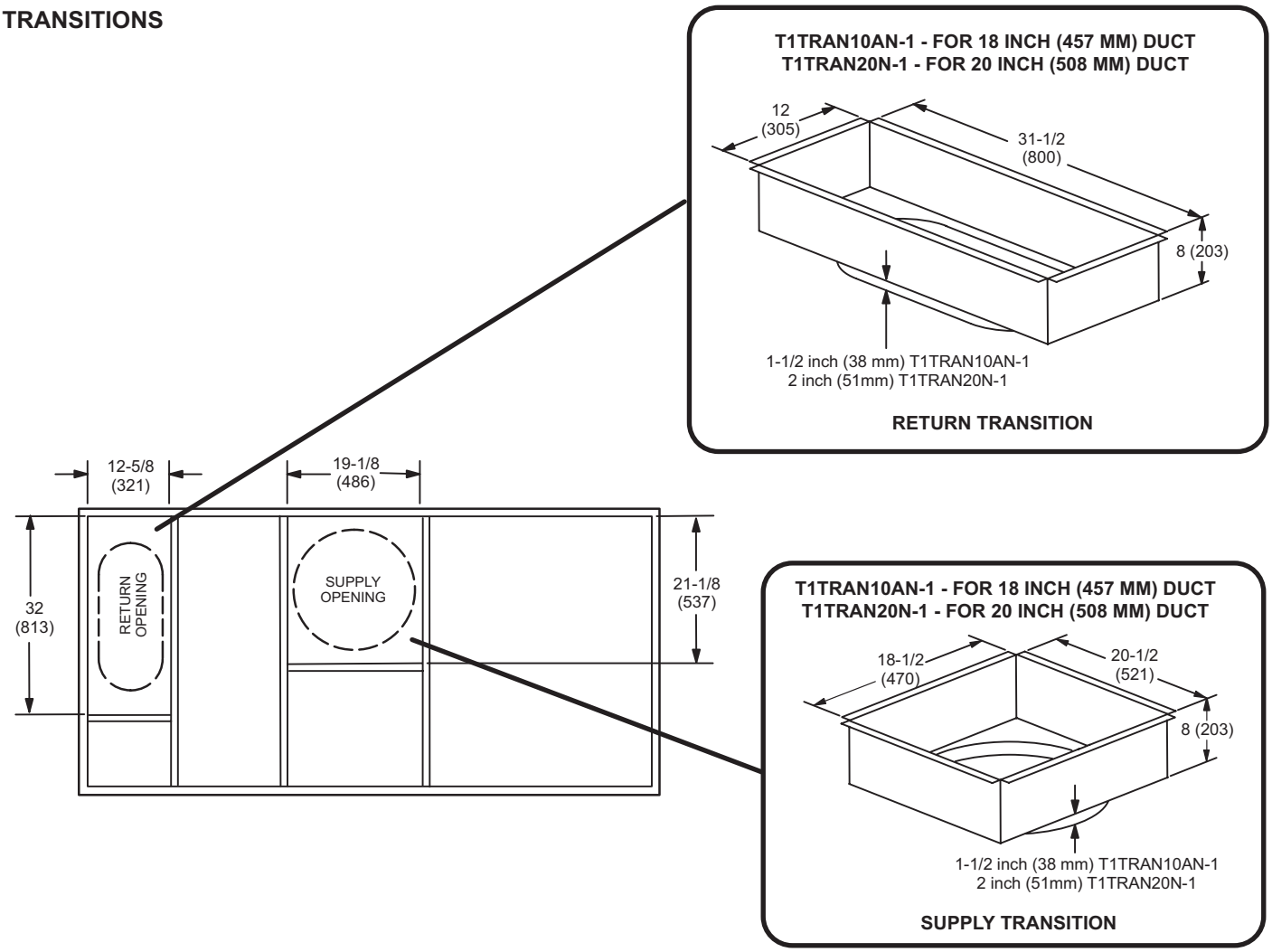

## COMBINATION CEILING SUPPLY AND RETURN DIFFUSERS

### STEP-DOWN CEILING DIFFUSER

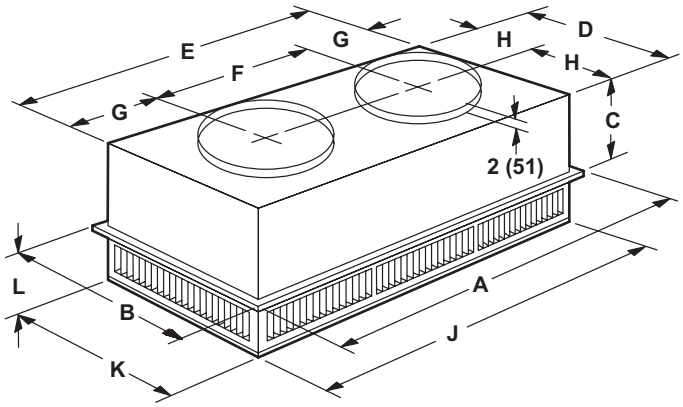


| Model | | RTD9-65S | RTD11-95S |
|---|---|---|---|
| A | in. | 47-5/8 | 47-5/8 |
| | mm | 1159 | 1159 |
| B | in. | 23-5/8 | 29-5/8 |
| | mm | 600 | 752 |
| C | in. | 11-3/8 | 14-3/8 |
| | mm | 289 | 365 |
| D | in. | 21-1/2 | 27-1/2 |
| | mm | 546 | 699 |
| E | in. | 45-1/2 | 45-1/2 |
| | mm | 1156 | 1158 |
| F | in. | 22-1/2 | 22-1/2 |
| | mm | 572 | 572 |
| G | in. | 11-1/2 | 11-1/2 |
| | mm | 292 | 292 |
| H | in. | 10-3/4 | 13-3/4 |
| | mm | 273 | 349 |
| J | in. | 45-1/2 | 45-1/2 |
| | mm | 1156 | 1156 |
| K | in. | 21-1/2 | 27-1/2 |
| | mm | 546 | 699 |
| L | in. | 7-1/8 | 8-1/8 |
| | mm | 181 | 206 |
| Duct Size | in. | 18 round | 20 round |
| | mm | 457 round | 508 round |

### FLUSH CEILING DIFFUSER

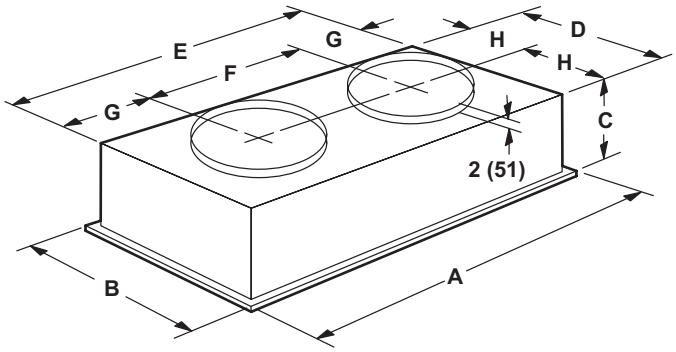


| Model | | FD9-65S | FD11-95S |
|---|---|---|---|
| A | in. | 47-5/8 | 47-5/8 |
| | mm | 1159 | 1159 |
| B | in. | 23-5/8 | 29-5/8 |
| | mm | 600 | 752 |
| C | in. | 13-1/2 | 16-5/8 |
| | mm | 343 | 422 |
| D | in. | 21 | 27 |
| | mm | 533 | 686 |
| E | in. | 45 | 45 |
| | mm | 1143 | 1143 |
| F | in. | 22-1/2 | 22-1/2 |
| | mm | 572 | 572 |
| G | in. | 11-1/4 | 11-1/4 |
| | mm | 286 | 286 |
| H | in. | 10-1/2 | 13-1/2 |
| | mm | 267 | 343 |
| Duct Size | in. | 18 round | 20 round |
| | mm | 457 round | 508 round |

## REVISIONS

| Sections | Description of Change |
|---|---|
| Cooling Ratings | Updated |

**Visit us at www.Lennox.com**
**For the latest technical information, www.LennoxCommercial.com**
**Contact us at 1-800-4-LENNOX**

NOTE - Due to Lennox' ongoing commitment to quality, Specifications, Ratings and Dimensions subject to change without notice and without incurring liability.
Improper installation, adjustment, alteration, service or maintenance can cause property damage or personal injury.
Installation and service must be performed by a qualified installer and servicing agency.

©2025 Lennox Industries, Inc.