EL297UHV

ELITE® SERIES

Upflow / Horizontal - Two-Stage Heat - Variable Speed Blower - 60Hz

RESIDENTIAL PRODUCT SPECIFICATIONS

Bulletin No. 211030
July 2024
Supersedes all previous versions

ELITE® SERIES

ENERGY STAR

AFUE - 97%
Input - 44,000 to 132,000 Btuh
Nominal Add-on Cooling - 2 to 5 Tons

MODEL NUMBER IDENTIFICATION

EL 2 97 UH 070 X V 36 B

Unit Type
EL = Elite® Series

Stages
2 = Two-Stage

AFUE
97 = 97%

Configuration
UH = Upflow/Horizontal

Nominal Gas Heat Input
045 = 44,000 Btuh
070 = 66,000 Btuh
090 = 88,000 Btuh
110 = 110,000 Btuh
135 = 132,000 Btuh

[1] Cabinet Width
B = 17-1/2 in.
C = 21 in.
D = 24-1/2 in.

Nominal Add-On Cooling Capacity
24 = 2 tons
36 = 3 tons
48 = 4 tons
60 = 5 tons

Blower
V = Variable Speed Blower Motor

Low NOx
X = Units meet California Nitrogen Oxides Standard (40 ng/J)

[1] Indoor coils with the same letter designation physically match the furnace.

FEATURE HIGHLIGHTS

1. Lennox Duralok Plus™ Heat Exchanger
2. Secondary Heat Exchanger
3. Inshot Burners
4. SureLight® Hot Surface Ignitor
5. Two-Stage Gas Control Valve
6. Two-Speed Combustion Air Inducer
7. Flame Rollout Switches
8. SureLight® Integrated Furnace Control
9. Variable Speed Direct Drive Blower
10. Insulated Cabinet
11. Safety Interlock Switch
12. Gas Piping And Electrical Inlets

NOTE - EL297V FURNACES CANNOT BE TWINNED!

CONTENTS

Blower Data 24
Approvals And Warranty 3
Dimensions 17
- Furnace/Coil Combined Dimensions 23
- Optional Accessories 19
- Optional Accessories - Venting. 20
- Unit - Horizontal Position 18
- Unit - Upflow Position 17
Features 3
Gas Heat Accessories 13
High Altitude Derate 13
Installation Clearances 11
Model Number Identification. 1
Optional Accessories - Order Separately 12
Specifications 10
Vent Lengths - Uninsulated Exhaust Pipe In Unconditioned Space 14

APPROVALS AND WARRANTY

APPROVALS

- AHRI Certified
- CSA International Certified
- Tested and rated according to US DOE test procedures and FTC labeling regulations
- Units are approved for installations from 0 - 4500 ft.
- ENERGY STAR® certified units are designed to use less energy, help save money on utility bills, and help protect the environment
- ISO 9001 Registered Manufacturing Quality System
- Blower data from unit tests conducted in Lennox Laboratory air test chamber

California Only

- These furnaces **do not meet** the South Coast Air Quality Management District (SCAQMD) Rule 1111 and San Joaquin Valley Air Pollution Control District (SJVAPCD) Rule 4905 NOx emission limit (14 ng/J) and cannot be installed within the SCAQMD, SJVAPCD and Bay Area.
- These furnaces are approved by the California Energy Commission and meets California Nitrogen Oxides Standard (NOx) limits of 40 ng/J

WARRANTY

- Duralok Plus™ Aluminized Steel Heat Exchanger:
  - Limited lifetime (twenty year transferable) in residential applications
  - Limited ten years in non-residential applications
- All other covered components:
  - Limited five years in residential installations
  - Limited one year in non-residential installations

NOTE - Refer to Lennox® Basic Limited Warranty at www.Lennox.com for additional details.

FEATURES

APPLICATIONS

- Input capacities of 44,000, 66,000, 88,000, 110,000 and 132,000 Btuh
- Energy efficiency (AFUE) - 97%
- Compact cabinet for upflow, horizontal-left or horizontal-right applications without any modifications
- Variable speed blower ideal for zoning applications
- Removable bottom seal panel shipped in place for side return air is easily removed for bottom/end return air applications
- Lennox add-on indoor coils, high-efficiency air cleaners and humidifiers can easily be added to furnace
- Shipped factory assembled with all controls installed and wired
- Each unit factory test operated to ensure proper operation

ZONING APPLICATIONS

- The EL297V furnace is designed to work with the Lennox ® Smart Zoning System with the Lennox® Communicating Thermostat
- The Lennox® Smart Zoning System provides direct feedback to the furnace, controlling both airflow and heat output to precisely match the comfort requirements for up to four zones

HEATING SYSTEM

1 Lennox Duralok Plus™ Heat Exchanger Assembly

- Lennox developed heat exchanger assembly consists of primary heat exchanger and secondary condenser coil assembly
- Main multi-pass crimped seam design clamshell type
- Constructed of heavy-gauge, aluminized steel
- Designed for normal expansion and contraction with maximum efficiency and minimum resistance to air flow

2

- Secondary heat exchanger condenser coil constructed of aluminum fins fitted to stainless steel tubes
- Coil is factory tested for leaks
- Condensate drain header box assembly located on front of coil
- Compact size permits low overall design of furnace cabinet
- Laboratory life cycle tested in excess of industry standards

HEATING SYSTEM (continued)

Lennox Designed Header Box
- Header box on end of condenser coil collects flue condensate for disposal through condensate drains
- Drains are located on each side of the cabinet for easy field installation of condensate drain trap
- Only one drain is used, the other drain is sealed
- Condensate drain trap is included with the unit for field installation

Lennox Designed Flue Condensate Trap Assembly
- Field installed outside the conditioned air stream
- Assembly can be mounted on either side of cabinet in upflow applications
- Assembly is mounted below the cabinet in horizontal applications
- Can also be mounted remotely (up to 5 ft. away) from unit
- See installation instructions
- 90° street elbow furnished for ease of drain trap installation
- Drain connection can be made with field provided PVC pipe or PVC coupling
- Drain cap on trap allows easy cleaning and winterizing

3 Inshot Burners
- Aluminized steel inshot burners provide efficient, trouble-free operation
- Burner venturi mixes air and gas in correct proportion for proper combustion
- Burner assembly can be removed from the unit as a single component for ease of service

4 SureLight® Hot Surface Ignitor
- Tough, reliable, long-life, trouble-free performance
- Silicon nitride ignitor
- Cemented to steatite block for protection against current leakage
- Ignition leads are constructed of nickel plated copper and are enclosed in high temperature Teflon® insulation for dependable operation

5 Two-Stage Gas Control Valve
- 24 volt redundant combination two-stage gas control valve combines manual shut off switch (On-Off), automatic electric valve (dual) and gas pressure regulation into a compact combination control

6 Two-Speed Combustion Air Inducer
- Permanent split capacitor (PSC), heavy duty blower prepurges heat exchanger and safely vents flue products
- Operates only during heating cycle
- Dual pressure switches (low fire/high fire) prove blower operation before allowing gas valve to open

7 Flame Rollout Switches (2)
- Factory installed on burner box
- Switch provides protection from abnormal operating conditions
- Manual reset

Limit Control
- Primary limit is accurately located on vestibule panel
- Automatic reset

Optional Accessories

High Altitude Orifice Kits
- Required on all units for proper unit operation at altitudes from 7501 to 10,000 ft.
- Available for natural gas and LPG/propane

High Altitude Pressure Switch Kit
- Required for proper unit operation on installations above 4500 ft.

Natural Gas to LPG/Propane Conversion Kit
- Required for field changeover from natural gas to LPG/Propane

LPG/Propane to Natural Gas Conversion Kit
- Required for field changeover from LPG/Propane to natural gas

Muffler (US Only)
- Significantly reduces outdoor operating sound levels
- Two-inch diameter muffler is optional for 045 through 110 input models

NOTE - Two-inch muffler is optional for the 110 input model with a maximum vent pipe length of up to 29 ft. Three-inch diameter muffler is optional for 110 and 135 input models.

NOTE - Three-inch muffler is optional for the 110 input model with a minimum vent pipe length of 30 ft.

- Installed vertically in the exhaust piping
- See Optional Accessory Dimension Drawing

DIRECT VENT / NON-DIRECT VENT SEALED COMBUSTION SYSTEM

- Furnace features a "sealed combustion" system and can be installed in either Direct Vent or Non-Direct applications
- In Direct Vent applications, combustion air is supplied from outdoors and flue gases are discharged outdoors
- In Non-Direct Vent applications, combustion air is supplied from indoors and flue gases are discharged outdoors

NOTE - Lennox has approved the use of DuraVent® PolyPro® and Centrotherm InnoFlue® manufactured vent pipe and terminations as an alternative to PVC vent pipe. Must be ordered separately.

- Tested and listed to the ULC S636 standard in Canada

DIRECT VENT / NON-DIRECT VENT SEALED COMBUSTION SYSTEM (continued)

- The polypropylene venting system must follow the uninsulated and unconditioned space vent lengths listed in the table on 15
- Refer to the Installation Instructions for additional details

Flue Coupling

- Assists with exhaust flue piping connection and servicing
- Includes flexible one 2 inch rubber coupling and two adjustable bands
- Approved for all Lennox 90% furnaces

Termination Kits

- Facilitates installation of combustion air intake pipe and flue exhaust pipe
- Refer to venting table in this bulletin to determine pipe size needed and proper termination kit required
- Certain Termination Kits are certified to ULC S636 standard for use in Canada only
- See Optional Accessories table and dimension drawings

Concentric - Direct Vent Applications

- 2 or 3 inch kit contains concentric termination assembly, reducer bushing and 45 degree elbow
- 2 inch kit for -045-070 models contains an outdoor exhaust accelerator
- Kit requires single hole penetration of roof or wall for installation
- Roof Termination Flashing Kit is available for use with 2 inch Kits
- CSA certified

Flush-Mount

- Kit contains flush-mount termination, accelerator, mounting template and hardware
- Kit may be used with 2, 2-1/2 or 3 in. pipe

Wall Assembly
Close Couple (US Only) - Direct Vent Applications

- 2 or 3 inch kit consists of close-couple, side-by-side PVC piping with galvanized steel wall cover plate for sealing and isolating piping penetration of the wall
- Piping spacing and length is sized for proper wall installations
- CSA certified

Close Couple WTK (Canada Only) - Direct Vent Applications

- 2 or 3 inch kit contains one insulated faceplate, one insulated exhaust pipe, elbow and fittings. Certified to ULC S636 standard

NOTE - Maintain a maximum of 6 inches between the inlet and outlet openings in the installation of the pipes.

Roof Termination Flashing Kit

- For vertical venting through a roof
- 2 or 3 inch kit contains two neoprene rubber roof flashings
- Vent pipe and insulation not furnished
- Flashing Kit can also be used with Concentric Vent Termination Kits used in vertical venting rooftop applications

CONTROLS

8 SureLight® Control (Lennox® Communicating)

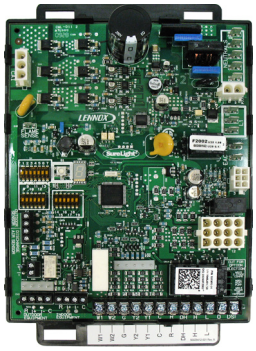

- Advanced control communicates information about various operating parameters in the furnace to the optional Lennox® Communicating Thermostat to constantly maintain the highest level of comfort and performance available
- Auto Configuration - On start-up the control automatically sends a description of the unit to the optional Lennox® Communicating Thermostat to automatically configure the number of stages and features available
- Terminals for connecting a conventional heating/cooling thermostat are also provided on the control
- Control also features Innovative AirFlex™ technology which allows custom blower settings based on the application
- Thermostat Control - For optimal performance, the use of a high-quality, digital two-stage thermostat with adjustable settings for first stage/second stage, on/off differentials and adjustable stage timers is recommended

Furnace Input Staging Options

Thermostat Type	Input Staging Available
Lennox® Communicating Thermostat	Two-Stage (65 and 100%)
Two-Stage (Conventional)	
Single-Stage (Conventional)	

- Safety Controls - Flame sensor utilizes flame rectification for safe and reliable operation
- Should flame fail to ignite, control will initiate 4 re-attempts at ignition before locking out unit operation for 60 minutes
- Watchguard type circuit automatically resets ignition control after one hour of continuous thermostat demand after unit lockout, eliminating nuisance calls for service

CONTROLS (continued)

- Display LED - Seven segment LED displays alpha-numeric information related to diagnostics as well as system operation and status
- Diagnostic codes are held in non-volatile memory, immune from power interruptions
- Holds up to ten diagnostic codes in order of occurrence for recall on demand
- Port on blower door allows for easy viewing

DIP Switch Settings

- Select Thermostat Used - Single-Stage or Two-Stage
- Two selectable second stage recognition times (7 and 12 minutes) are available on the control when the furnace is used with a single-stage thermostat
- When used with a two-stage thermostat, furnace will only initiate second stage operation with a second stage thermostat demand
- Heating Speeds - A combination of DIP switch settings allow the following motor speed selection settings within the heating speed selected for fine tuning air volume:
  - Factory default
  - 6%, 12%, 18% or 24% increase
  - 6%, 12% or 18% decrease
  - See Blower Performance tables
- Cooling Speeds - A combination of DIP switch settings allow the following motor speed selection settings within the cooling speed selected for fine tuning air volume:
  - Factory default
  - 10% increase
  - 10% decrease
  - See Blower Performance tables
- Blower Speed Ramping (Cooling Mode) - DIP switch settings allow one of four blower speed profiles during cooling operation
  - Profile A (factory setting) - Motor runs at 50% for 30 seconds, then at 82% for 7-1/2 minutes, then at 100% (if needed) until demand is satisfied. Once demand is met, motor runs at 50% for 30 seconds, then ramps down to stop
  - Profile B - Motor runs at 82% for 7-1/2 minutes and then at 100% (if needed) until demand is satisfied. Once demand is met,motor ramps down to stop
  - Profile C - Motor runs at 100% until demand is satisfied. Once demand is met, motor runs at 100% for 60 seconds, then ramps down to stop
  - Profile D - Motor runs at 100% until demand is satisfied. Once demand is met, motor ramps down to stop
- Dehumidification (Active or Humiditrol® Option) - A jumper on the control must be clipped to enable active dehumidification and/or operation with a Humiditrol® Whole-Home Dehumidification System
- A humidity controlling thermostat or device is also required
- During a call for cooling, air volume is automatically reduced, forcing humidity removal by the air conditioner or heat pump system (single stage units or two-stage units running at 2nd stage)
- After the humidity has reached the desired set-point the cooling air volume returns to its designed rate
- A dehumidification signal from the thermostat reduces the cooling cfm to 70% of the requested cooling cfm
- Dual-Fuel Operation - A jumper on the control must be clipped to enable operation with a single or two-stage heat pump
- The indoor blower is started without delay when a call for heat is received
- Two-Stage Compressor Operation - A jumper on the control must be clipped to enable operation with a two-stage compressor
- The cooling blower speeds for first and second stage cooling will be dictated by the applicable DIP switch settings
- Lennox System Operations Monitor Connection - Monitors outdoor unit operation (communicating mode)
- Blower On/Off Time (Heating) - Blower on time is fixed at 30 seconds, blower off time is adjustable from 60, 90, 120 and 180 seconds (factory setting - 90 seconds)
- Blower On/Off Time (Cooling) - For air-conditioning applications, blower on time is 2 seconds following thermostat demand for cooling
- See Blower Speed Ramping (Cooling Mode) profiles for various blower off details
- Controls evaporator humidity by controlling blower and compressor speed on two-stage outdoor units when used with the Lennox® Communicating Thermostat or the CS7500 Thermostat
- Continuous Blower Speed - Adjustable continuous blower speed is a percentage of the high cooling speed selection
- Two selectable options (via DIP switch settings) of 28% and 38% (default setting)
- Accessory Terminal - One accessory terminal furnished for additional power supply requirements for 120 volt (less than 1 amp) powered air cleaners
- One unpowered pair of contacts are provided for humidifier connections and may be connected to 24V or 120V
- Control is factory installed in the unit control box

24 Volt Transformer (40VA)

- Furnished and factory installed on outside of control box
- Circuit breaker (furnished) is wired in series

Field Wiring Make-Up Box

- Furnished for line voltage wiring
- Factory installed internally on left side of furnace
- Box may be installed internally on right side of furnace

FEATURES

CONTROLS (continued)

Optional Accessories

S40 Smart Wi-Fi Thermostat (part of the Lennox® Residential Communicating Control System)

- Recognizes and connects to all Lennox® Communicating products to automatically configure and control the heating/cooling system (based on user-specified settings) for the highest level of comfort, performance and efficiency

- Recognizes model and serial number information for Lennox® Communicating products to simplify system setup
- Lennox Smart Room Sensors, Lennox Wireless Extenders and Lennox Smart Air Quality Monitor can be added to the system
- Smart home automation compatible with Amazon Alexa®, Google Assistant, Control4® and Building36®
- Sends service alerts and reminders
- Lennox Smart Thermostat App features Wi-Fi remote temperature monitoring and adjustment through a home wireless network apps for smartphones or tablets
- Lennox Smart Technician App allows installer to manage systems in the home
- Service Dashboard features online real-time monitoring and advanced diagnostics of installed Lennox® Communicating systems
- Simple easy-to-use touchscreen allows complete system configuration
- Scheduled maintenance alerts, system warnings and troubleshooting are also displayed on thermostat screen
- Easy to read 7 inch high definition color display (measured diagonally)
- Conventional outdoor units (not Lennox® Communicating) can easily be added and controlled by the S40 Thermostat
- Installer setup screens allow quick and simple system configuration without a manual, Installer can also run tests on complete system or individual components for easy maintenance and troubleshooting
- Serial communications bus (RSBus), with less wiring than a conventional heating/cooling system, allows system communication
- Uses standard 4-wire unshielded thermostat wiring
- High Definition Color Display with Subbase and wallplate furnished for easy installation

NOTE - See the Lennox® S40 Thermostat Product Specifications bulletin in the Controls section for more information.

E30 Smart Wi-Fi Thermostat

- Wi-Fi enabled, electronic 7-day, universal, multi-stage, programmable, touchscreen thermostat
- 3 Heat/2 Cool
- Auto-changeover
- Controls dehumidification during cooling mode and humidification during heating mode

- Offers enhanced capabilities including humidification / dehumidification / dewpoint measurement and control, Humiditrol® control, and equipment maintenance reminders
- Easy to read 7 in. color touchscreen (measured diagonally)
- LCD display with backlight shows the current and set temperature, time, inside relative humidity, system status (operating mode and schedules) and outside temperature (optional outdoor sensor required)
- Smooth Setback Recovery starts system early to achieve setpoint at start of program period
- Compressor short-cycle protection (5 minutes)
- Up to four separate schedules are available plus Schedule IQ™
- One-Touch Away Mode - A quick and easy way to set the cooling and heating setpoints while away
- Smart Away™ - Uses geo-fencing technology to determine when the homeowner is within a predetermined distance from the home to operate the system when leaving, away and arriving
- Wi-Fi remote monitoring and adjustment through a home wireless network for desktop PCs, laptops and apps for smartphones or tablets
- Smart home automation compatible with Apple HomeKit™, Amazon Alexa®, Google Assistant and IFTTT
- Service Dashboard features online real-time monitoring of installed Lennox® Communicating systems
- High Definition Color Display with Subbase, Smart Hub Controller, wallplate (for retrofit installations) furnished for easy installation
- See the E30 Smart Wi-Fi Thermostat Product Specifications bulletin for more information

Remote Outdoor Temperature Sensor

- Allows thermostat to display outdoor temperature
- Automatically detected when connected to thermostat

NOTE - Sensor is required for the Enhanced Dehumidification Accessory (EDA).

NOTE - Sensor is furnished as standard with Lennox® Communicating outdoor units, optional for conventional units.

CONTROLS (continued)

Optional Accessories (continued)

Thermostat
- Thermostat is not furnished with unit
- See Lennox Price Book for selection

Transformer (75VA)
- Recommended when furnace is used with zoning or defrost thermostats and other 24V accessories requiring a higher VA rating
- Circuit breaker (furnished) is wired in series
- Replaces the standard 40VA transformer

BLOWER

9 Variable Speed Direct Drive Blower.
- Each blower assembly statically and dynamically balanced
- Blower assembly easily removed for servicing

Variable Speed Blower Motor
- Variable speed motor maintains specified air volume from 0 though 0.8 in. w.g. (heating) and 0 through 1.0 in. w.g. (Cooling) static range
- Variable speed operation is achieved by the use of an ECM (Electronically Commutated Motor) motor
- Motor is controlled by furnace control
- Change in blower speed is easily accomplished by simple DIP switch change on furnace control
- Motor is resiliently mounted
- When furnaces are used with the Lennox® Smart Zoning System and the Lennox® Communicating Thermostat, the blower motor operates from predetermined minimum - maximum air volumes to satisfy zone requirements
- See Blower Data tables

CABINET

- Low-profile, narrow width allows easy installation
- Heavy-gauge, cold rolled steel construction
- Pre-painted cabinet finish
- Flanges provided on supply air opening for ease of plenum connection or alignment with indoor coil
- 10 Insulated with foil faced insulation on sides and back of heating compartment and mat faced insulation in blower compartment
- Sealed blower compartment
- Inner blower compartment access panel seals blower compartment from air leakage
- Cabinet door can be removed without any tools
- Complete service access
- 11 Safety interlock switch automatically shuts off power to unit when blower compartment access door is removed
- 12 Gas piping and electrical inlets are provided in both sides of cabinet

Bottom/Side Return Air Entry:
- Upflow/horizontal with bottom return air entry:
  - Remove furnished bottom seal panel from cabinet
- Upflow only with side return-air entry:
  - Corners are marked on either side of cabinet for return air cut-out
- See dimension drawings

NOTE - 60C and 60D size units that require air volumes over 1800 cfm must have one of the following:

1. Single side return air and Optional Return Air Base with transition that must accommodate required 20 x 25 x 1 inch air filter to maintain proper velocity
2. Bottom return air
3. Return air from both sides
4. Bottom and one side return air

- See Blower Performance Tables for additional information

Coil Match-Up
- All furnaces exactly match Lennox cased upflow indoor coils and horizontal indoor coils with same letter designation (A, B, C, D) in model number
- No adaptor required
- Engaging holes furnished on cabinet for alignment
- Lennox uncased coils match furnaces without any overhang but require an optional adaptor base or field fabricated transition to match furnace opening
- See coil bulletin for additional information

Low Leakage Cabinet
- All models have less than 2% air leakage
- Meets ANSI/ASHRAE Standard 193-2010 “Method of Test for Determining the Air Tightness of HVAC Equipment”

FEATURES

CABINET (continued)

Optional Accessories

Condensate Drain Heat Cable Kits
- Self-limiting wattage heat cable prevents condensate drain from freezing in unconditioned areas
- Available in 6 or 24 ft. lengths

Horizontal Suspension Kit
- Provides suspension of unit and indoor coil in horizontal applications
- Allows complete service access
- Consists of corner mounted hanging brackets with vibration isolators, return air end support rail and hardware for assembly
- Metal hanging straps must be field provided

Crawl Space Vent Drain Kit
- Allows venting through a crawl space for upflow and horizontal applications
- Kit for Canada is certified to ULC S636
- Includes 2 or 3 inch sanitary tee, 2 inch PVC assembly, PVC boot and clamp

Return Air Base

NOTE - On furnaces with side return air and condensate trap on the same side of the cabinet, a field fabricated transition or Return Air Base is required when using an IAQ product higher than 14-3/16 inches installed next to the unit and serviced from the front. IAQ products higher than 20 inches require a field fabricated transition.

NOTE - Must be used for 60C and 60D size models with air volumes over 1800 cfm in upflow applications when only one side return is required.

- Cabinet is shipped flat for easy field assembly
- Pre-painted steel to match the furnace
- See Dimension Drawing

High Performance Economizer
(Commercial Applications Only)
- Designed for applications requiring outdoor air to be utilized in a commercial HVAC system
- Allows the entry of fresh outdoor air for free cooling, reducing the requirement for mechanical cooling
- Heavy gauge galvanized steel cabinet lined with thick fiberglass insulation
- Mixed air sensor, outdoor air sensor and 24VAC transformer furnished
- Approved for California Title 24 building standards. ASHRAE 90.1-2010 compliant
- See separate Product Specifications bulletin for additional information and available control and sensor options

NOTE - Economizer is not Lennox® Communicating compatible.

FILTER (not furnished)

- Filter and provisions for external mounting must be field provided

Optional Accessories

Air Filter and Rack Kit for Horizontal Return Air (End) Applications
- Washable or vacuum cleanable polyurethane frame type filter and external end return air rack
- Rack has filter door for servicing
- Flanges on rack for duct connection
- Field installed
- See dimension drawing

Air Filter and Rack Kit for Upflow Side Return Air
NOTE - Not for use with Return Air Base
- Washable or vacuum cleanable polyurethane frame type filter and external side return air rack available for field installation
- Available in single and ten pack kits
- Rack has filter door for servicing
- Flanges on rack for duct connection
- Field installs on either side of unit cabinet
- See dimension drawing

REFRIGERATION DETECTION SYSTEM (RDS)

Optional Accessories

Refrigerant Detection System (RDS) Coil Sensor Kit

- Complies with UL 60335-2-40 approved standard
- Required for field installation for all systems using R-454B refrigerant if sensor is not furnished with coil
- Consists of Refrigerant Detection System (RDS) sensor, lineset sleeves, mounting brackets and A2L labeling
- Sensor ensures safe operation for systems equipped with R-454B refrigerant
- Sensor will detect anu R-454B refrigerant

Refrigerant Detection System (RDS) Blower Control Board

Communicating Blower Control Board (Universal)

- Communicating Blower Control Board and Sensor can be used universally with any Lennox® communicating furnace or any non-communicating 24 volt furnace

Non-Communicating Blower Control Board

- Non-Communicating Blower Control Board and Sensor can be used with any non-communicating 24 volt furnace

Standard Features

- Complies with UL 60335-2-40 approved standard
- Required for all systems using R-454B refrigerant
- Connects to the RDS sensor furnished with the RDS Coil Sensor Kit
- Supports up to two RDS Sensors (factory setting)
- Used as an interface between indoor unit and thermostat to control system
- Ensures safe operation for systems equipped with R-454B refrigerant
- If R-454B refrigerant is detected, the refrigerant detection system will stop compressor and/or heating operating and operate the blower to reduce concentrations in the conditioned space
- Once safe levels are reached the HVAC system will resume normal operation
- Multi-color LED for system status and as an aid in troubleshooting
  - Flashing LED codes for system status (Green/Blue) and diagnosing Sensor errors (Red)
- Alarm relay can trigger an external alarm if R-454B refrigerant is detected
- Zone relay opens all zone dampers (if part of a zoning system) if R-454B refrigerant is detected
- Power is disabled to non-communicating thermostats to prevent demand if R-454B refrigerant is detected
- On system start-up blower will run for five minutes and any thermostat demands are disabled
- Dimensions (H x W x D): 7-7/16 x 7-7/16 x 2-1/2 (189 x 189 x 127 mm)

NOTE - See Refrigerant Detection System (RDS) Components Table on page 14.

See the CK40 Indoor Coil Product Specifications bulletins for more information.

Refer to the Installation Instructions for additional information.

SPECIFICATIONS

		Model No.	EL297UH045XV36B	EL297UH070XV36B	EL297UH090XV36C
Gas Heating Performance		[1] AFUE	97%	97%	97%
	High Fire	Input - Btuh	44,000	66,000	88,000
		Output - Btuh	43,000	64,000	85,000
		Temperature rise range - °F	35 - 65	50 - 80	60 - 90
		Gas Manifold Pressure (in. w.g.) Nat. Gas / LPG/Propane	3.5 / 10.0	3.5 / 10.0	3.5 / 10.0
	Low Fire	Input - Btuh	29,000	43,000	57,000
		Output - Btuh	28,000	42,000	56,000
		Temperature rise range - °F	20 - 50	25 - 55	30 - 60
		Gas Manifold Pressure (in. w.g.) Nat. Gas / LPG/Propane	1.7 / 4.5	1.7 / 4.5	1.7 / 4.5
High static - in. w.g.		Heating	0.8	0.8	0.8
		Cooling	1.0	1.0	1.0
Connections in.		Intake / Exhaust Pipe (PVC)	2 / 2	2 / 2	2 / 2
		Gas pipe size IPS	1/2	1/2	1/2
		Condensate Drain Trap (PVC pipe) - i.d.	3/4	3/4	3/4
		with furnished 90° street elbow	3/4 slip x 3/4 Mipt	3/4 slip x 3/4 Mipt	3/4 slip x 3/4 Mipt
		with field supplied (PVC coupling) - o.d.	3/4 slip x 3/4 MPT	3/4 slip x 3/4 MPT	3/4 slip x 3/4 MPT
Indoor Blower		Wheel nominal diameter x width - in.	10 x 9	10 x 9	10 x 9
		Motor output - hp	1/2	1/2	1/2
		Tons of add-on cooling	2 - 3	2 - 3	2 - 3
		Air Volume Range - cfm	465 - 1370	490 - 1365	520 - 1360
Electrical Data		Voltage	120 volts - 60 hertz - 1 phase		
		Blower motor full load amps	7.7	7.7	7.7
		Maximum overcurrent protection	15	15	15
Shipping Data		lbs. - 1 package	126	134	151

NOTE - Filters and provisions for mounting are not furnished and must be field provided.

[1] Annual Fuel Utilization Efficiency based on DOE test procedures and according to FTC labeling regulations. Isolated combustion system rating for non-weatherized furnaces.

SPECIFICATIONS

		Model No.	EL297UH090XV48C	EL297UH090XV60C	EL297UH110XV48C
Gas Heating Performance		AHRI Ref. No.	4988513	4988514	4988515
		[1] AFUE	97%	97%	97%
	High Fire	Input - Btuh	88,000	88,000	110,000
		Output - Btuh	86,000	86,000	106,000
		Temperature rise range - °F	45 - 75	40 - 70	60 - 90
		Gas Manifold Pressure (in. w.g.) Nat. Gas / LPG/Propane	3.5 / 10.0	3.5 / 10.0	3.5 / 10.0
	Low Fire	Input - Btuh	57,000	57,000	72,000
		Output - Btuh	56,000	56,000	70,000
		Temperature rise range - °F	30 - 60	25 - 55	35 - 65
		Gas Manifold Pressure (in. w.g.) Nat. Gas / LPG/Propane	1.7 / 4.5	1.7 / 4.5	1.7 / 4.5
High static - in. w.g.		Heating	0.8	0.8	0.8
		Cooling	1.0	1.0	1.0
Connections in.		Intake / Exhaust Pipe (PVC)	2 / 2	2 / 2	2 / 2
		Gas pipe size IPS	1/2	1/2	1/2
		Condensate Drain Trap (PVC pipe) - i.d.	3/4	3/4	3/4
		with furnished 90° street elbow	3/4 slip x 3/4 Mipt	3/4 slip x 3/4 Mipt	3/4 slip x 3/4 Mipt
		with field supplied (PVC coupling) - o.d.	3/4 slip x 3/4 MPT	3/4 slip x 3/4 MPT	3/4 slip x 3/4 MPT
Indoor Blower		Wheel nominal diameter x width - in.	11 x 11	11 x 11	11 x 11
		Motor output - hp	3/4	1	3/4
		Tons of add-on cooling	2.5 - 4	3 - 5	2.5 - 4
		Air Volume Range - cfm	680 - 1770	840 - 2195	670 - 1760
Electrical Data		Voltage	120 volts - 60 hertz - 1 phase		
		Blower motor full load amps	10.1	12.8	10.1
		Maximum overcurrent protection	15	20	15
Shipping Data		lbs. - 1 package	157	160	164

NOTE - Filters and provisions for mounting are not furnished and must be field provided.

[1] Annual Fuel Utilization Efficiency based on DOE test procedures and according to FTC labeling regulations. Isolated combustion system rating for non-weatherized furnaces.

SPECIFICATIONS

			Model No.	EL297UH110XV60C	EL297UH135XV60D
Gas Heating Performance			[1] AFUE	97%	97%
	High Fire		Input - Btuh	110,000	132,000
			Output - Btuh	107,000	127,000
			Temperature rise range - °F	45 - 75	55 - 85
			Gas Manifold Pressure (in. w.g.) Nat. Gas / LPG/Propane	3.5 / 10.0	3.5 / 10.0
	Low Fire		Input - Btuh	72,000	86,000
			Output - Btuh	70,000	84,000
			Temperature rise range - °F	35 - 65	40 - 70
			Gas Manifold Pressure (in. w.g.) Nat. Gas / LPG/Propane	1.7 / 4.5	1.7 / 4.5
High static - in. w.g.			Heating	0.8	0.8
			Cooling	1.0	1.0
Connections in.			Intake / Exhaust Pipe (PVC)	2 / 2	2 / 2
			Gas pipe size IPS	1/2	1/2
			Condensate Drain Trap (PVC pipe) - i.d.	3/4	3/4
			with furnished 90° street elbow	3/4 slip x 3/4 Mipt	3/4 slip x 3/4 Mipt
			with field supplied (PVC coupling) - o.d.	3/4 slip x 3/4 MPT	3/4 slip x 3/4 MPT
Indoor Blower			Wheel nominal diameter x width - in.	11 x 11	11 x 11
			Motor output - hp	1	1
			Tons of add-on cooling	3-5	3-5
			Air Volume Range - cfm	850 - 2125	950 - 2250
Electrical Data			Voltage	120 volts - 60 hertz - 1 phase	
			Blower motor full load amps	12.8	12.8
			Maximum overcurrent protection	20	20
Shipping Data			lbs. - 1 package	174	188

NOTE - Filters and provisions for mounting are not furnished and must be field provided.

[1] Annual Fuel Utilization Efficiency based on DOE test procedures and according to FTC labeling regulations. Isolated combustion system rating for non-weatherized furnaces.

INSTALLATION CLEARANCES

Sides	[1] 0 inches (0 mm)
Rear	0 inches (0 mm)
Top/Plenum	1 inch (25 mm)
Front	0 inches (0 mm)
Front (service/alcove)	24 inches (610 mm)
Floor	[2] Combustible

NOTE − Air for combustion must conform to the methods outlined in the National Fuel Gas Code (NFPA 54/ANSI−Z223.1) or the National Standard of Canada CAN/CSA−B149.1 Natural Gas and Propane Installation Code".

NOTE − In the U.S. flue sizing must conform to the methods outlined in the current National Fuel Gas Code (NFPA 54/ANSI−Z223.1) or applicable provisions of local building codes. In Canada flue sizing must conform to the methods outlined in National Standard of Canada CAN/CSA−B149.1.

[1] Allow proper clearances to accommodate condensate trap and vent pipe installation.

[2] Do not install the furnace directly on carpeting, tile, or other combustible materials other than wood flooring.

OPTIONAL ACCESSORIES - ORDER SEPARATELY

NOTE - FURNACES CANNOT BE TWINNED!

			"B" Width Models	"C" Width Models	"D" Width Models
CABINET ACCESSORIES					
Horizontal Suspension Kit - Horizontal only			**51W10**	**51W10**	**51W10**
Return Air Base - Upflow only			**50W98**	**50W99**	**51W00**
High Performance Economizer (Commercial Only)			**10U53**	**10U53**	**10U53**
CONDENSATE DRAIN KITS					
Condensate Drain Heat Cable		6 ft.	**26K68**	**26K68**	**26K68**
		24 ft.	**26K69**	**26K69**	**26K69**
Crawl Space Vent Drain Kit		US	**51W18**	**51W18**	**51W18**
		Canada	**15Z70**	**15Z70**	**15Z70**
CONTROLS					
S40 Smart Wi-Fi Thermostat			**22V24**	**22V24**	**22V24**
[1] Discharge Air Temperature Sensor			**88K38**	**88K38**	**88K38**
E30 Wi-Fi Smart Thermostat			**20A65**	**20A65**	**20A65**
[2] Remote Outdoor Air Temperature Sensor			**X2658**	**X2658**	**X2658**
Transformer (75VA)			**27J32**	**27J32**	**27J32**
FILTER KITS					
[3] Air Filter and Rack Kit	Horizontal (end)		**87L96**	**87L97**	**87L98**
		Size of filter - in.	18 x 25 x 1	20 x 25 x 1	25 x 25 x 1
	Side Return	Single	**44J22**	**44J22**	**44J22**
		Ten Pack	**66K63**	**66K63**	**66K63**
		Size of filter - in.	16 x 25 x 1	16 x 25 x 1	16 x 25 x 1
VENTING					
Flue Coupling		2 in.	**17H92**	**17H92**	**17H92**

[1] Optional for service diagnostics.

[2] Remote Outdoor Temperature Sensor is used with conventional (non-Lennox® Communicating) outdoor units (sensor is furnished with Lennox® Communicating outdoor units). Allows the thermostat to display outdoor temperature. Required in dual-fuel and EDA applications.

[3] Cleanable polyurethane, frame-type filter.

NOTE - Termination Kits (**44W92**, **44W93**, **30G28**, **51W12**, **81J20**) and Crawl Space Vent Drain Kit (**15Z70**) are certified to ULC S636 standard for use in Canada only.

GAS HEAT ACCESSORIES

Input	High Altitude Pressure Switch Kit		Natural Gas to LPG/Propane Kit	LPG/Propane to Natural Gas Kit	Natural Gas High Altitude Orifice Kit	LPG/Propane High Altitude Orifice Kit	Muffler (US Only)
	4501 - 7500 ft.	7501 - 10,000 ft.	0 - 7500 ft.	0 - 7500 ft.	7501 - 10,000 ft.	7501 - 10,000 ft.	
045	14A51	14A53	11K51	77W09	73W37	11K46	15Y66 (2-inch)
070	14A48	14A54	11K51	77W09	73W37	11K46	15Y66 (2-inch)
090	14A54	14A53	11K51	77W09	73W37	11K46	15Y66 (2-inch)
110	25B93	14A45	11K51	77W09	73W37	11K46	[1] 15Y66 (2-inch) 16A56 (3-inch)
135	25B94	25B95	11K51	77W09	73W37	11K46	16A56 (3-inch)

[1] Two-inch diameter muffler (**15Y66**) is optional for 110 input model with a maximum vent pipe length of up to 29 ft.
Three-inch diameter muffler (**16A56**) is optional for 110 input model with a minimum vent pipe length of 30 ft.

REFRIGERANT DETECTION SYSTEM (RDS) COMPONENTS

Description		Order No.
Refrigerant Detection System (RDS) Coil Sensor Kit		**26Z69**
Refrigerant Detection System (RDS) Blower Control Board	Any Lennox® Communicating Furnace or any Non-Communicating 24V Furnace (Universal)	**27A03**
	Any Non-Communicating 24V Furnace	**27A02**

NOTE - Communicating Blower Control Board and Sensor can be used universally with Lennox® communicating furnace or any non-communicating 24 volt furnace.
Non-Communicating Blower Control Board and Sensor can be used with any non-communicating 24 volt furnace.

HIGH ALTITUDE DERATE

NOTE - Units may be installed at altitudes up to 10,000 ft.
At altitudes above 4501 ft. the unit must be derated to match the manifold pressure information shown below.
Units installed at altitudes of 4501 to 10,000 ft. require a pressure switch change.
Units installed at altitudes of 7501 to 10,000 ft. require an orifice change.
See the Gas Heat Accessories table for ordering information.

NOTE - This is the only permissible derate for these units.

NOTE - In Canada, certification for installations at elevations over 4500 feet is the jurisdiction of local authorities.

Input	Gas	Manifold Pressure in. w.g.										Supply Line Pressure in. w.g. 0 - 10,000 ft.	
		0 - 4500 ft.		4501 - 5500 ft.		5501 - 6500 ft.		6501 - 7500 ft.		7501 - 10,000 ft.			
		Low Fire	High Fire	Low Fire	High Fire	Low Fire	High Fire	Low Fire	High Fire	Low Fire	High Fire	Min.	Max.
All Sizes	Natural	1.7	3.5	1.6	3.3	1.5	3.2	1.5	3.1	1.7	3.5	4.5	13.0
	LPG/Propane	4.5	10.0	4.2	9.4	4.0	9.1	3.9	8.9	4.5	10.0	11.0	13.0

OUTDOOR TERMINATION KIT USAGE

Input Size	Vent Pipe Diameter (in.)	Standard Terminations				Concentric Terminations		
		Flush Mount Kit	Wall Kit		Field Fabricated Exhaust Accelerator Size Required	Concentric Kit		
			2 inch	3 inch		1-1/2 inch	2 inch	3 inch
		51W11 (US) [5] 51W12 (CA)	22G44 (US) [5] 30G28 (CA)	44J40 (US) [5] 81J20 (CA)		71M80 (US) [5] 44W92 (CA)	69M29 (US) [5] 44W92 (CA)	60L46 (US) [5] 44W93 (CA)
045	[1] 1-1/2	[4] YES	YES	[2] YES	1-1/2 in.	[3] YES	- - -	- - -
	2	[4] YES	YES	[2] YES	1-1/2 in.	[3] YES	- - -	- - -
	2-1/2	[4] YES	YES	[2] YES	1-1/2 in.	[3] YES	- - -	- - -
	3	[4] YES	YES	[2] YES	1-1/2 in.	[3] YES	- - -	- - -
070	[1] 1-1/2	[4] YES	YES	[2] YES	1-1/2 in.	[3] YES	- - -	- - -
	2	[4] YES	YES	[2] YES	1-1/2 in.	[3] YES	- - -	- - -
	2-1/2	[4] YES	YES	[2] YES	1-1/2 in.	[3] YES	- - -	- - -
	3	[4] YES	YES	[2] YES	1-1/2 in.	[3] YES	- - -	- - -
090	2	[4] YES	- - -	YES	2 in.	- - -	YES	YES
	2-1/2	[4] YES	- - -	YES	2 in.	- - -	YES	YES
	3	[4] YES	- - -	YES	2 in.	- - -	YES	YES
110	2	YES	- - -	YES	2 in.	- - -	YES	YES
	2-1/2	YES	- - -	YES	2 in.	- - -	YES	YES
	3	YES	- - -	YES	2 in.	- - -	YES	YES
135	3	YES	- - -	YES	2 in.	- - -	- - -	YES

NOTE - Standard Terminations do not include any vent pipe or elbows external to the structure.
Any vent pipe or elbows external to the structure must be included in total vent length calculations. See Vent Length Tables.

[1] 2 in. to 1-1/2 in. reducer required, must be field provided.

[2] Requires field provided 1-1/2 in. outdoor exhaust accelerator.

[3] Concentric Kits **71M80** and **44W92** include 1-1/2 in. outdoor exhaust accelerator, required when used with 045 and 070 input models. Accelerator is not used with 090, 110, 135 input models. When using 1-1/2 in. piping, the pipe must be transitioned to 2 in. pipe when used with the Concentric Kit.

[4] Flush Mount Kit **51W11** and **51W12** includes 1-1/2 in. outdoor exhaust accelerator, required when used with 045, 070 and 090 input models. Accelerator is not used with 110 or 135 input models. When using 1-1/2 in. piping, the pipe must be transitioned to 2 in. pipe when used with the Flush Mount Kit.

[5] Termination Kits 30G28, **44W92**, **44W93**, **51W12** and **81J20** are certified to ULC S636 standard for use in Canada only.

VENT LENGTHS - UNINSULATED EXHAUST PIPE IN UNCONDITIONED SPACE

[1] Winter Design Temperatures	Vent Pipe Diameter	Unit Input Size									
		045		070		090		110		135	
		[2] Maximum Uninsulated Exhaust Vent Length (ft.)									
		PVC	PolyPro InnoFlue	PVC	PolyPro InnoFlue	PVC	PolyPro InnoFlue	PVC	PolyPro InnoFlue	PVC	PolyPro InnoFlue
32 to 21°F	1-1/2 in.	22	N/A	25	N/A	N/A	N/A	N/A	N/A	N/A	N/A
	2 in.	21	18	33	30	46	42	30	30	N/A	N/A
	2-1/2 in.	16	N/A	26	N/A	37	N/A	36	N/A	N/A	N/A
	3 in.	12	12	21	21	30	30	29	29	42	42
20 to 1°F	1-1/2 in.	12	N/A	20	N/A	N/A	N/A	N/A	N/A	N/A	N/A
	2 in.	11	9	19	17	28	25	27	24	N/A	N/A
	2-1/2 in.	7	N/A	14	N/A	21	N/A	20	N/A	N/A	N/A
	3 in.	N/A	N/A	9	9	16	16	14	14	23	23
0 to –20°F	1-1/2 in.	8	N/A	13	N/A	N/A	N/A	N/A	N/A	N/A	N/A
	2 in.	6	4	12	10	19	16	18	15	N/A	N/A
	2-1/2 in.	N/A	N/A	7	N/A	13	N/A	12	N/A	N/A	N/A
	3 in.	N/A	N/A	N/A	N/A	8	8	7	7	13	13

[1] Refer to 99% Minimum Design Temperature table provided in the current edition of the ASHRAE Handbook-Fundamentals.

[2] Maximum Equivalent Vent Length permitted is defined as Total Length (linear feet) of vent pipe, plus equivalent length (ft.) of fittings, plus equivalent length (ft.) of termination.

VENTING NOTES - Concentric Terminations are equivalent to 5 ft. of straight pipe and should be included when measuring total pipe length.
One 90° elbow is equivalent to 5 feet of straight vent pipe.
Two 45° elbows are equal to one 90° elbow.
One 45° elbow is equivalent to 2.5 feet of straight vent pipe.

PolyPro® poly-propylene vent pipe is a registered trademark of DuraVent®.

Innoflue® is a registered trademark of Centrotherm Eco Systems.

VENT LENGTHS

STANDARD TERMINATION AT ELEVATION 0 - 4500 ft.

Pipe Size		1-1/2 in.					2 in.					2-1/2 in.					3 in.				
	Input	045	070	090	110	135	045	070	090	110	135	045	070	090	110	135	045	070	090	110	135
No. of 90 ELL	1	25	20	N/A	N/A	N/A	81	66	44	24	N/A	115	115	93	58	N/A	138	137	118	118	114
	2	20	15	N/A	N/A	N/A	76	61	39	19	N/A	110	110	88	53	N/A	133	132	113	113	109
	3	15	10	N/A	N/A	N/A	71	56	34	14	N/A	105	105	83	48	N/A	128	127	108	108	104
	4	10	N/A	N/A	N/A	N/A	66	51	29	N/A	N/A	100	100	78	43	N/A	123	122	103	103	99
	5	N/A	N/A	N/A	N/A	N/A	61	46	24	N/A	N/A	95	95	73	38	N/A	118	117	98	98	94
	6	N/A	N/A	N/A	N/A	N/A	56	41	19	N/A	N/A	90	90	68	33	N/A	113	112	93	93	89
	7	N/A	N/A	N/A	N/A	N/A	51	36	14	N/A	N/A	85	85	63	28	N/A	108	107	88	88	84
	8	N/A	N/A	N/A	N/A	N/A	46	31	N/A	N/A	N/A	80	80	58	23	N/A	103	102	83	83	79
	9	N/A	N/A	N/A	N/A	N/A	41	26	N/A	N/A	N/A	75	75	53	18	N/A	98	97	78	78	74
	10	N/A	N/A	N/A	N/A	N/A	36	21	N/A	N/A	N/A	70	70	48	13	N/A	93	92	73	73	69

STANDARD TERMINATION ELEVATION 4501 - 10,000 ft.

Pipe Size		1-1/2 in.					2 in.					2-1/2 in.					3 in.				
	Input	045	070	090	110	135	045	070	090	110	135	045	070	090	110	135	045	070	090	110	135
No. of 90 ELL	1	25	20	N/A	N/A	N/A	81	66	44	N/A	N/A	115	115	93	58	N/A	138	137	118	118	114
	2	20	15	N/A	N/A	N/A	76	61	39	N/A	N/A	110	110	88	53	N/A	133	132	113	113	109
	3	15	10	N/A	N/A	N/A	71	56	34	N/A	N/A	105	105	83	48	N/A	128	127	108	108	104
	4	10	N/A	N/A	N/A	N/A	66	51	29	N/A	N/A	100	100	78	43	N/A	123	122	103	103	99
	5	N/A	N/A	N/A	N/A	N/A	61	46	24	N/A	N/A	95	95	73	38	N/A	118	117	98	98	94
	6	N/A	N/A	N/A	N/A	N/A	56	41	19	N/A	N/A	90	90	68	33	N/A	113	112	93	93	89
	7	N/A	N/A	N/A	N/A	N/A	51	36	14	N/A	N/A	85	85	63	28	N/A	108	107	88	88	84
	8	N/A	N/A	N/A	N/A	N/A	46	31	N/A	N/A	N/A	80	80	58	23	N/A	103	102	83	83	79
	9	N/A	N/A	N/A	N/A	N/A	41	26	N/A	N/A	N/A	75	75	53	18	N/A	98	97	78	78	74
	10	N/A	N/A	N/A	N/A	N/A	36	21	N/A	N/A	N/A	70	70	48	13	N/A	93	92	73	73	69

CONCENTRIC TERMINATION AT ELEVATION 0 - 4500 ft.

Pipe Size		1-1/2 in.					2 in.					2-1/2 in.					3 in.				
	Input	045	070	090	110	135	045	070	090	110	135	045	070	090	110	135	045	070	090	110	135
No. of 90 ELL	1	20	15	N/A	N/A	N/A	73	58	42	22	N/A	105	105	89	54	N/A	121	121	114	114	105
	2	15	10	N/A	N/A	N/A	68	53	37	17	N/A	100	100	84	49	N/A	116	116	109	109	100
	3	10	N/A	N/A	N/A	N/A	63	48	32	12	N/A	95	95	79	44	N/A	111	111	104	104	95
	4	N/A	N/A	N/A	N/A	N/A	58	43	27	N/A	N/A	90	90	74	39	N/A	106	106	99	99	90
	5	N/A	N/A	N/A	N/A	N/A	53	38	22	N/A	N/A	85	85	69	34	N/A	101	101	94	94	85
	6	N/A	N/A	N/A	N/A	N/A	48	33	17	N/A	N/A	80	80	64	29	N/A	96	96	89	89	80
	7	N/A	N/A	N/A	N/A	N/A	43	28	12	N/A	N/A	75	75	59	24	N/A	91	91	84	84	75
	8	N/A	N/A	N/A	N/A	N/A	38	23	N/A	N/A	N/A	70	70	54	19	N/A	86	86	79	79	70
	9	N/A	N/A	N/A	N/A	N/A	33	18	N/A	N/A	N/A	65	65	49	14	N/A	81	81	74	74	65
	10	N/A	N/A	N/A	N/A	N/A	28	13	N/A	N/A	N/A	60	60	44	N/A	N/A	76	76	69	69	60

CONCENTRIC TERMINATION ELEVATION 4501 - 10,000 ft.

Pipe Size		1-1/2 in.					2 in.					2-1/2 in.					3 in.				
	Input	045	070	090	110	135	045	070	090	110	135	045	070	090	110	135	045	070	090	110	135
No. of 90 ELL	1	20	15	N/A	N/A	N/A	73	58	42	N/A	N/A	105	105	89	54	N/A	121	121	114	114	105
	2	15	10	N/A	N/A	N/A	68	53	37	N/A	N/A	100	100	84	49	N/A	116	116	109	109	100
	3	10	N/A	N/A	N/A	N/A	63	48	32	N/A	N/A	95	95	79	44	N/A	111	111	104	104	95
	4	N/A	N/A	N/A	N/A	N/A	58	43	27	N/A	N/A	90	90	74	39	N/A	106	106	99	99	90
	5	N/A	N/A	N/A	N/A	N/A	53	38	22	N/A	N/A	85	85	69	34	N/A	101	101	94	94	85
	6	N/A	N/A	N/A	N/A	N/A	48	33	17	N/A	N/A	80	80	64	29	N/A	96	96	89	89	80
	7	N/A	N/A	N/A	N/A	N/A	43	28	12	N/A	N/A	75	75	59	24	N/A	91	91	84	84	75
	8	N/A	N/A	N/A	N/A	N/A	38	23	N/A	N/A	N/A	70	70	54	19	N/A	86	86	79	79	70
	9	N/A	N/A	N/A	N/A	N/A	33	18	N/A	N/A	N/A	65	65	49	14	N/A	81	81	74	74	65
	10	N/A	N/A	N/A	N/A	N/A	28	13	N/A	N/A	N/A	60	60	44	N/A	N/A	76	76	69	69	60

VENT LENGTHS (EXHAUST) - VENTILATED ATTIC OR CRAWLSPACE INTAKE AIR

STANDARD TERMINATION AT ELEVATION 0 - 4500 ft.

	Pipe Size	1-1/2 in.					2 in.					2-1/2 in.					3 in.				
	Input	045	070	090	110	135	045	070	090	110	135	045	070	090	110	135	045	070	090	110	135
No. of 90 ELL	1	20	15	N/A	N/A	N/A	71	56	34	14	N/A	100	100	78	43	N/A	118	117	98	98	94
	2	15	10	N/A	N/A	N/A	66	51	29	9	N/A	95	95	73	38	N/A	113	112	93	93	89
	3	10	N/A	N/A	N/A	N/A	61	46	24	4	N/A	90	90	68	33	N/A	108	107	88	88	84
	4	N/A	N/A	N/A	N/A	N/A	56	41	19	N/A	N/A	85	85	63	28	N/A	103	102	83	83	79
	5	N/A	N/A	N/A	N/A	N/A	51	36	14	N/A	N/A	80	80	58	23	N/A	98	97	78	78	74
	6	N/A	N/A	N/A	N/A	N/A	46	31	9	N/A	N/A	85	75	63	18	N/A	93	92	73	73	69
	7	N/A	N/A	N/A	N/A	N/A	41	26	4	N/A	N/A	70	70	48	13	N/A	88	87	68	68	64
	8	N/A	N/A	N/A	N/A	N/A	36	21	N/A	N/A	N/A	65	65	43	8	N/A	83	82	63	63	59
	9	N/A	N/A	N/A	N/A	N/A	31	16	N/A	N/A	N/A	60	60	38	3	N/A	78	77	58	58	54
	10	N/A	N/A	N/A	N/A	N/A	26	11	N/A	N/A	N/A	55	55	33	N/A	N/A	73	72	53	53	49

STANDARD TERMINATION ELEVATION 4501 - 10,000 ft.

	Pipe Size	1-1/2 in.					2 in.					2-1/2 in.					3 in.				
	Input	045	070	090	110	135	045	070	090	110	135	045	070	090	110	135	045	070	090	110	135
No. of 90 ELL	1	20	15	N/A	N/A	N/A	71	56	34	N/A	N/A	100	100	78	43	N/A	118	117	98	98	94
	2	15	10	N/A	N/A	N/A	66	51	29	N/A	N/A	95	95	73	38	N/A	113	112	93	93	89
	3	10	N/A	N/A	N/A	N/A	61	46	24	N/A	N/A	90	90	68	33	N/A	118	107	88	88	84
	4	N/A	N/A	N/A	N/A	N/A	56	41	19	N/A	N/A	85	85	63	28	N/A	113	102	83	83	79
	5	N/A	N/A	N/A	N/A	N/A	51	36	14	N/A	N/A	80	80	58	23	N/A	98	97	78	78	74
	6	N/A	N/A	N/A	N/A	N/A	46	31	9	N/A	N/A	85	85	53	18	N/A	93	92	73	73	69
	7	N/A	N/A	N/A	N/A	N/A	41	26	4	N/A	N/A	70	70	48	13	N/A	98	87	68	68	64
	8	N/A	N/A	N/A	N/A	N/A	36	21	N/A	N/A	N/A	65	65	43	8	N/A	93	82	63	63	59
	9	N/A	N/A	N/A	N/A	N/A	31	16	N/A	N/A	N/A	60	60	38	3	N/A	78	77	58	58	54
	10	N/A	N/A	N/A	N/A	N/A	26	11	N/A	N/A	N/A	55	55	33	N/A	N/A	73	72	53	53	49

[1] NOTE - 60C and 60D size units that require air volumes over 1800 cfm must have one of the following:
1. Single side return air and Optional Return Air Base with transition that must accommodate required 20 x 25 x 1 inch (508 x 635 x 25 mm) air filter to maintain proper velocity.
2. Bottom return air.
3. Return air from both sides.
4. Bottom and one side return air.

See Blower Performance Tables for additional information.

[2] Optional Side Return Air Filter Kit is not for use with the Optional Return Air Base.

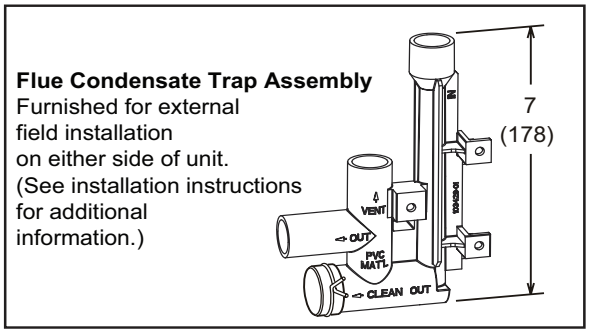

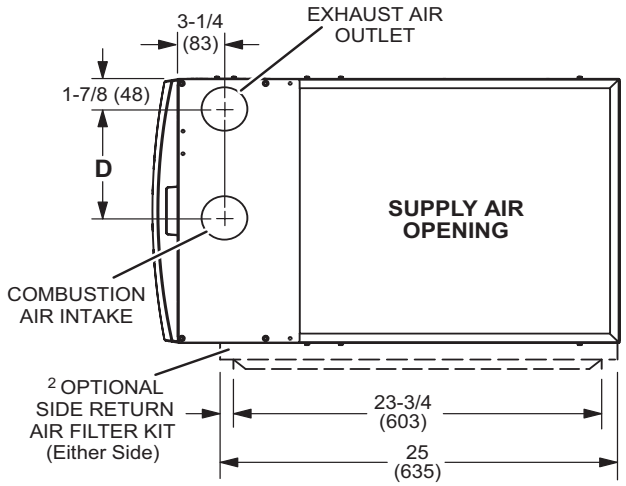

TOP VIEW

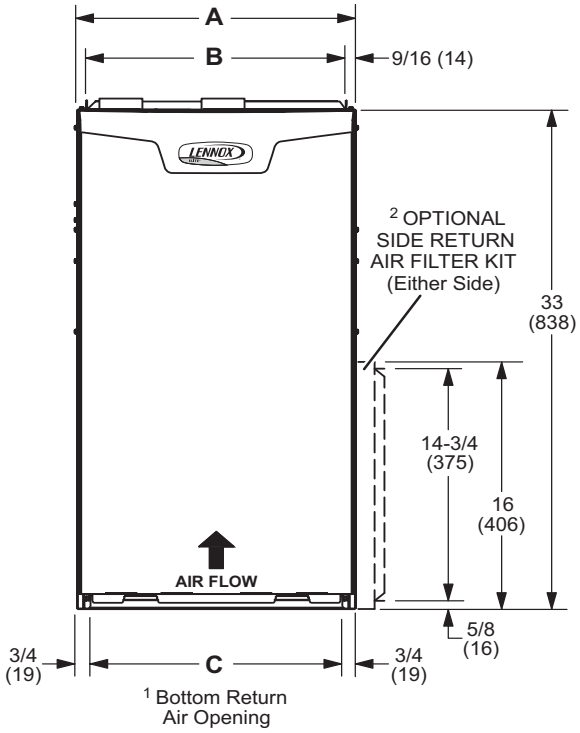

FRONT VIEW

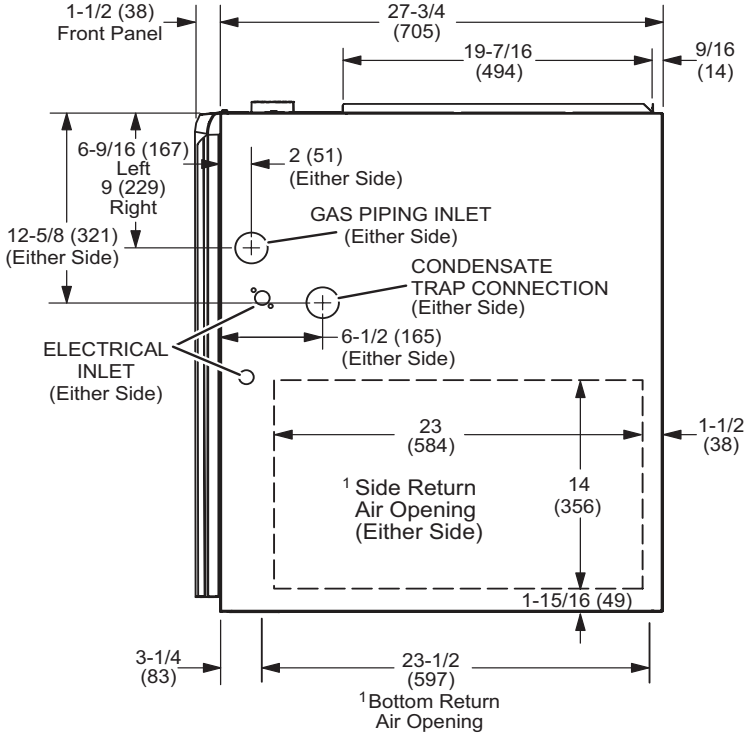

SIDE VIEW

Model No.	A		B		C		D	
	in.	mm	in.	mm	in.	mm	in.	mm
EL297UH045XV36B EL297UH070XV36B	17-1/2	446	16-3/8	416	16	406	7-5/8	194
EL297UH090XV36C EL297UH090XV48C EL297UH090XV60C EL297UH110XV48C EL297UH110XV60C	21	533	19-7/8	505	19-1/2	495	9-3/8	238
EL297UH135XV60D	24-1/2	622	23-3/8	594	23	584	11-1/8	283

LEFT-HAND AIR DISCHARGE

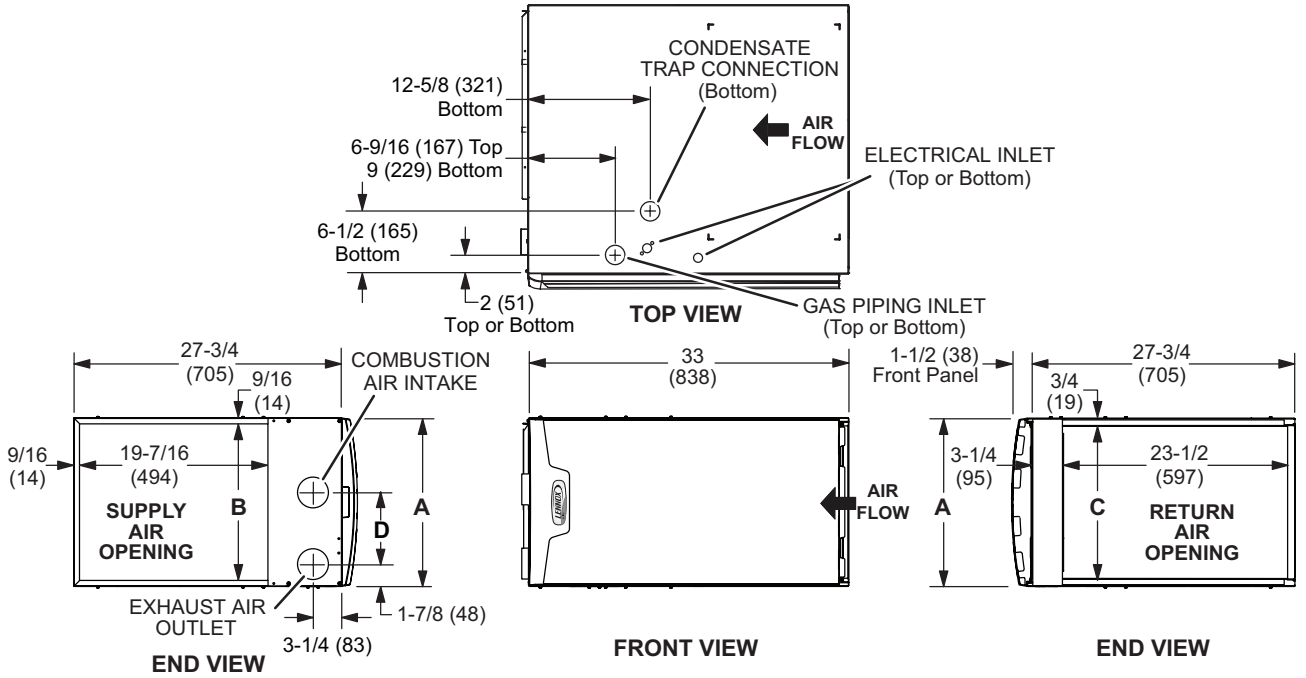

RIGHT-HAND AIR DISCHARGE

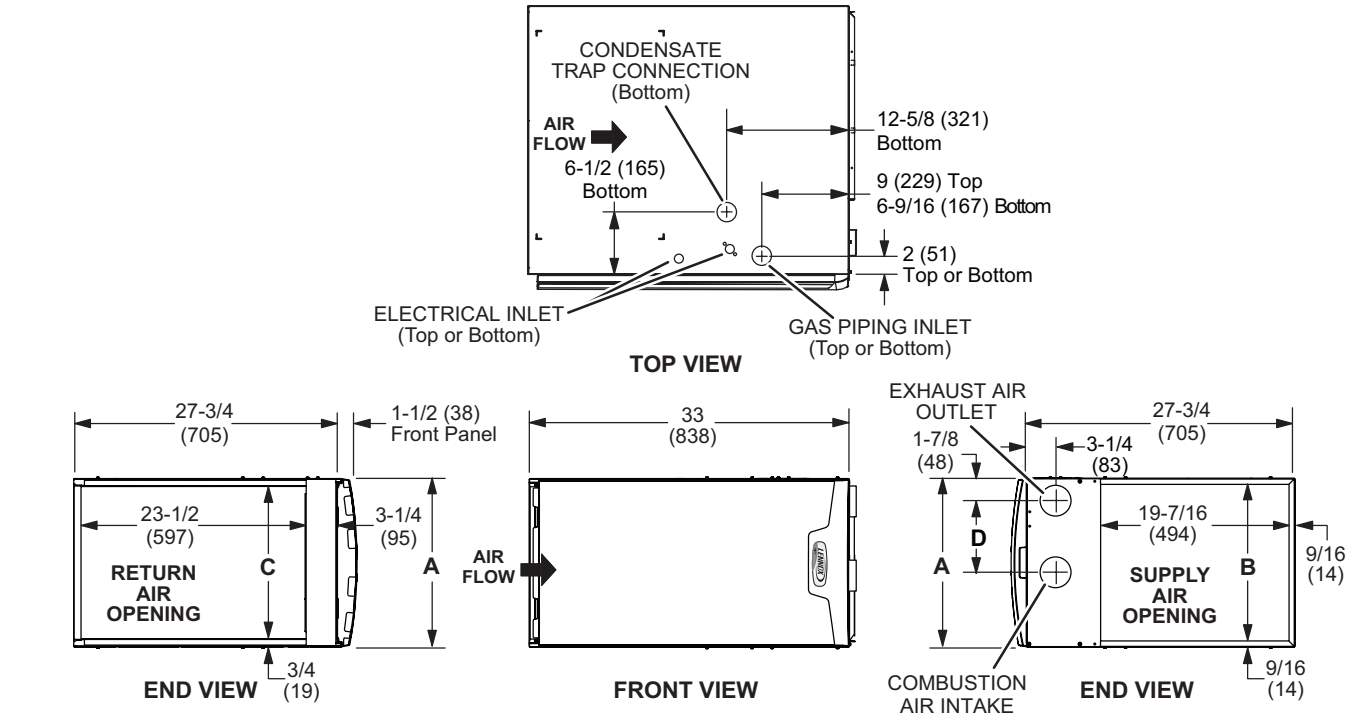

Model No.	A		B		C		D	
	in.	mm	in.	mm	in.	mm	in.	mm
EL297UH045XV36B EL297UH070XV36B	17-1/2	446	16-3/8	416	16	406	7-5/8	194
EL297UH090XV36C EL297UH090XV48C EL297UH090XV60C EL297UH110XV48C EL297UH110XV60C	21	533	19-7/8	505	19-1/2	495	9-3/8	238
EL297UH135XV60D	24-1/2	622	23-3/8	594	23	584	11-1/8	283

HORIZONTAL (END) FILTER KIT

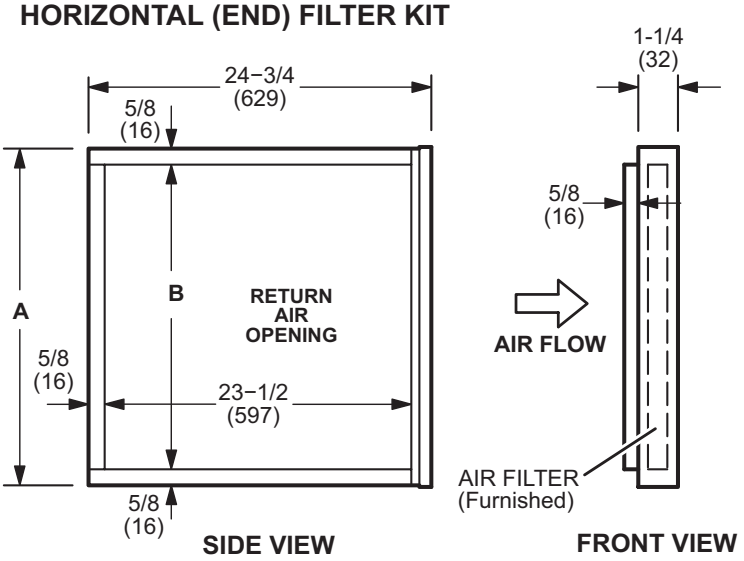

Furnace Cabinet Width	Catalog Number	A		B	
		in.	mm	in.	mm
B	**87L96**	18	457	16-3/4	425
C	**87L97**	21	533	18-3/4	476
D	**87L98**	25	635	23-3/4	603

OPTIONAL RETURN AIR BASE

(Upflow Applications Only - For use with B, C and D cabinets)

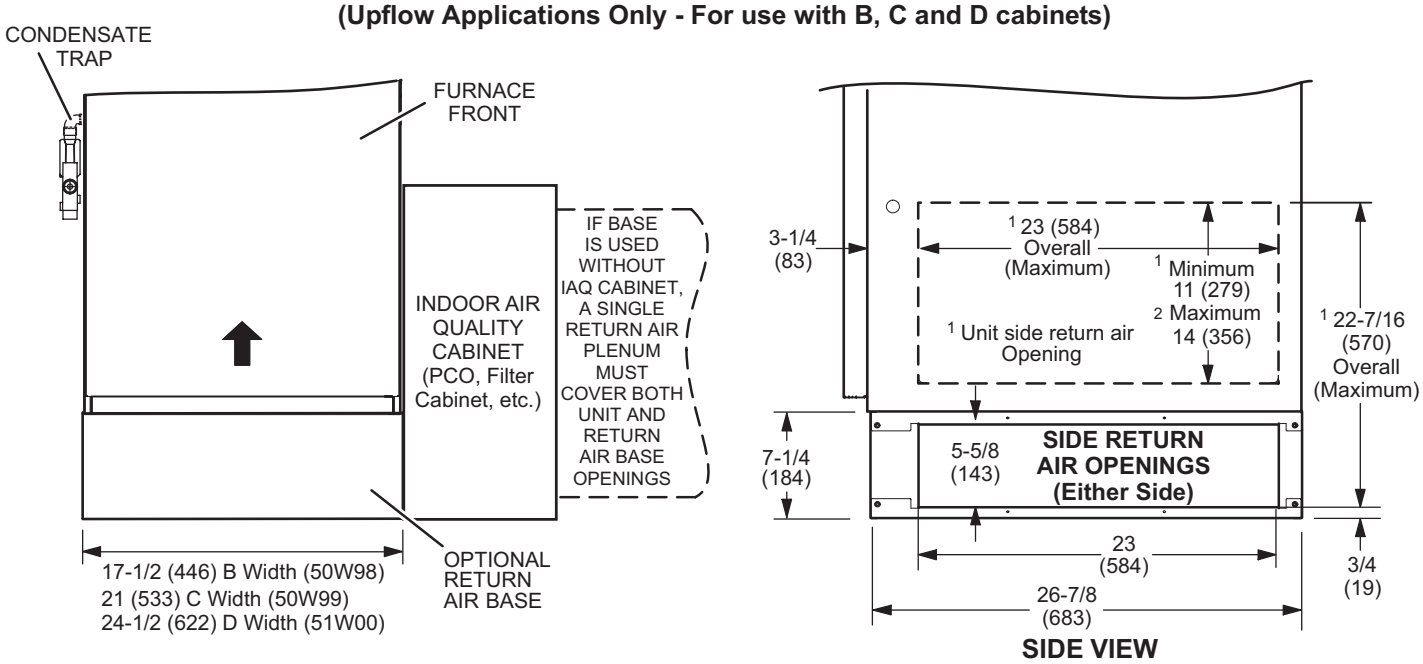

NOTE- Optional Side Return Air Filter Kits are not for use with Optional Return Air Base.

[1] Both the unit return air opening and the base return air opening must be covered by a single plenum or IAQ cabinet. Minimum unit side return air opening dimensions for units requiring 1800 cfm or more of air (W x H): 23 x 11 in. (584 x 279 mm). The opening can be cut as needed to accommodate plenum or IAQ cabinet while maintaining dimensions shown. Side return air openings must be cut in the field. There are cutting guides stenciled on the cabinet for the side return air opening. The size of the opening must not extend beyond the markings on the furnace cabinet.

[2] To minimize pressure drop, the largest opening height possible, up to 14 in. (356 mm), is preferred.

FLUSH-MOUNT VENT TERMINATION KIT 51W11 (US) or 51W12 (CANADA)

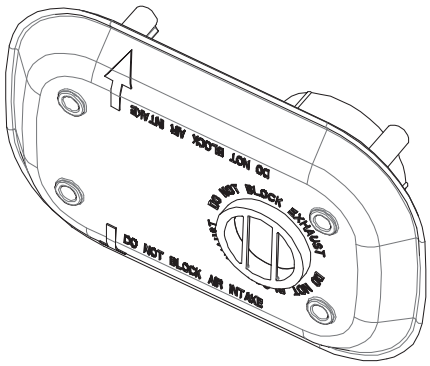

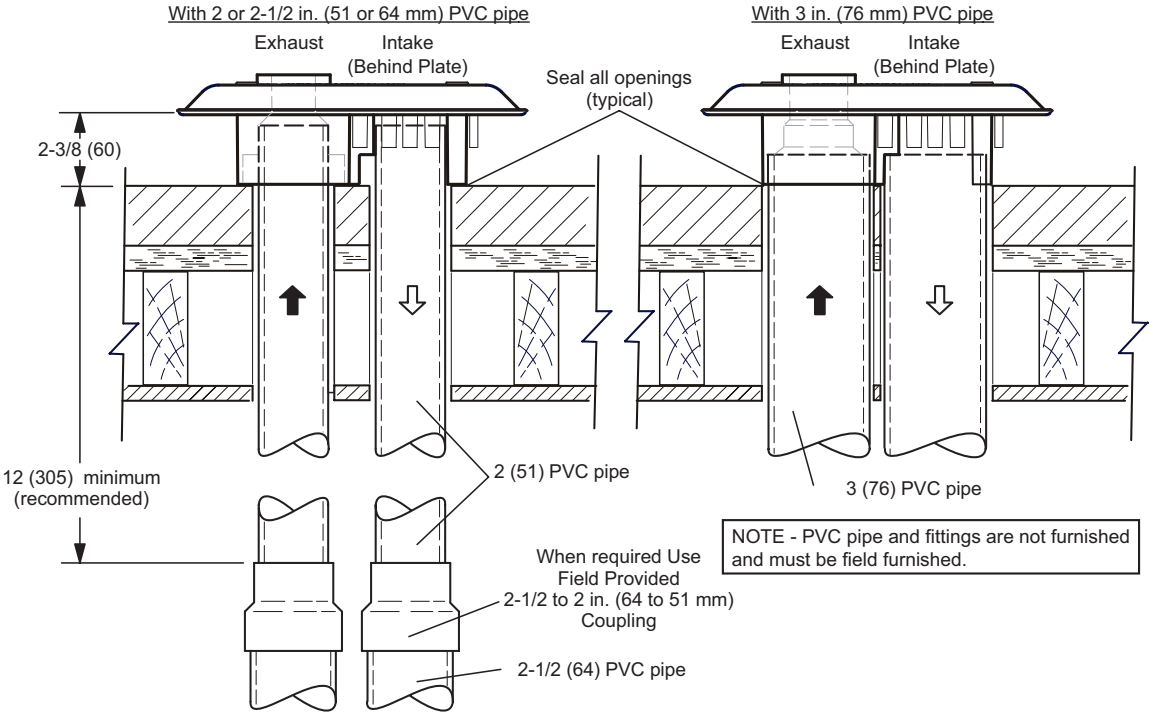

NOTE - PVC pipe and fittings are not furnished and must be field furnished.

MUFFLERS
15Y66 - 2-inch
16A56 - 3-inch

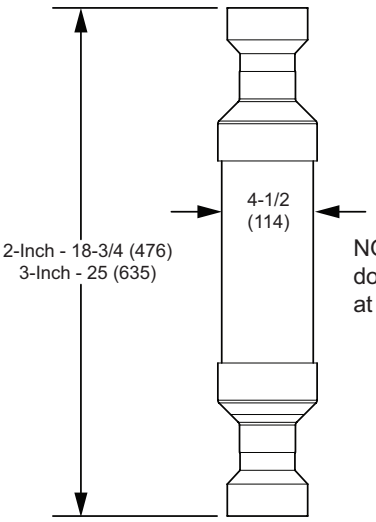

(Installed Vertically in the Exhaust Pipe)

NOTE - Two-inch mufflers do not have reducers at each end.

CONCENTRIC WALL TERMINATION APPLICATIONS

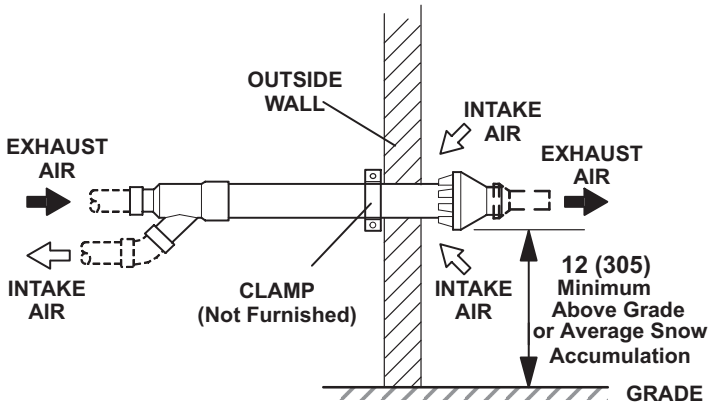

CONCENTRIC ROOF TERMINATION APPLICATIONS

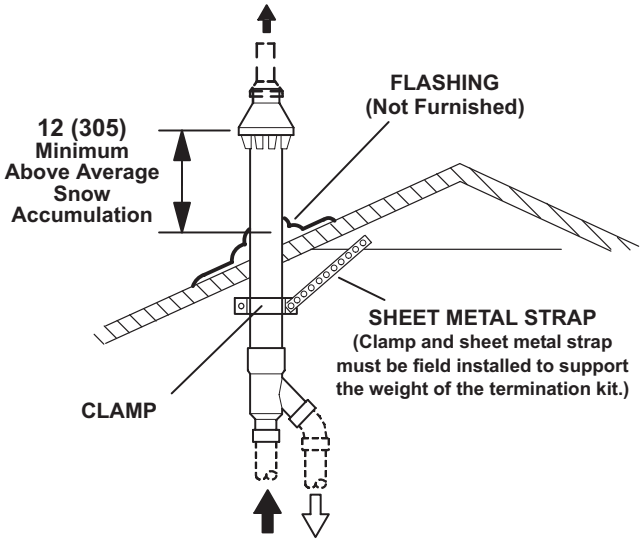

71M80 / 69M29 / 44W92 − 2 inch kits
60L46 / 44W93 − 3 inch kits
See Installation Instructions for additional information.

Note - Field provided reducer may be required to adapt different vent pipe sizes to termination.

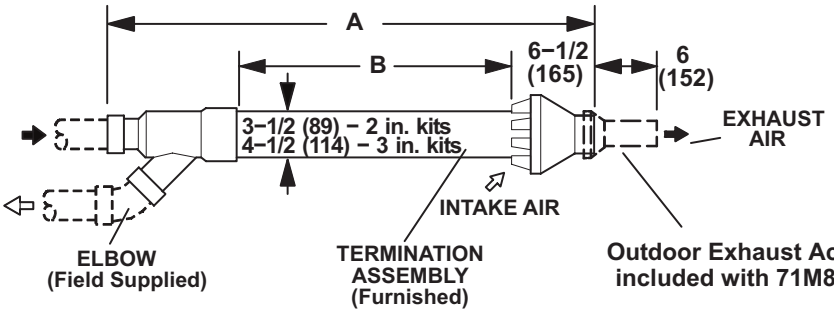

Cat. No.	A		B	
	in.	mm	in.	mm
71M80 69M29	33−3/8	848	16−3/4	425
44W92 (Canada)	29	737	15−1/2	394
60L46	38−7/8	987	21−3/16	538
44W93 (Canada)	36−1/8	918	19−1/2	495

NOTE − Typical illustration for dimensions only. Design may vary depending on kit ordered.

WALL TERMINATION KITS (CLOSE-COUPLE)
EXTENDED VENT FOR GRADE CLEARANCE
2 inch (51 mm) 22G44 (US)
3 inch (76 mm) 44J40 (US)
See Installation Instructions for additional information.

Note - Field provided reducer may be required to adapt different vent pipe sizes to termination.

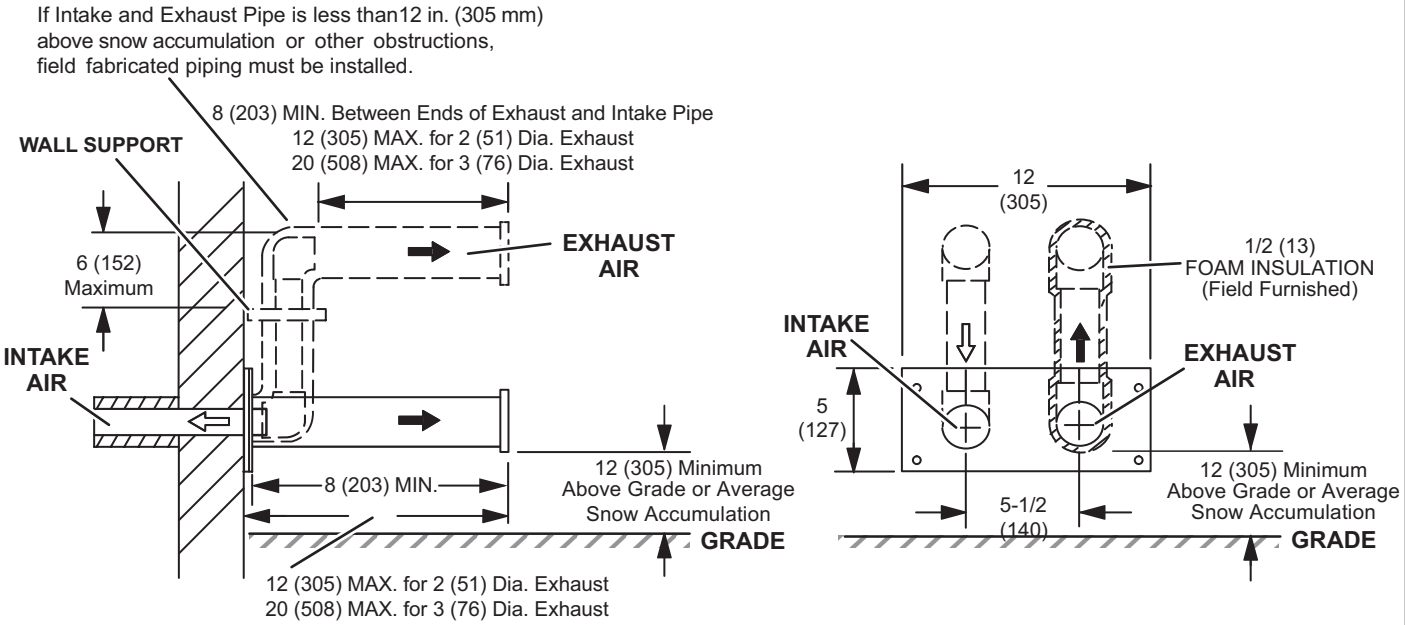

WALL TERMINATION KITS (CLOSE-COUPLE)
EXTENDED VENT FOR GRADE CLEARANCE
2 inch (51 mm) 30G28 (WTK Canada)
3 inch (76 mm) 81J20 (WTK Canada)
See Installation Instructions for additional information.

Note - Field provided reducer may be required to adapt different vent pipe sizes to termination.

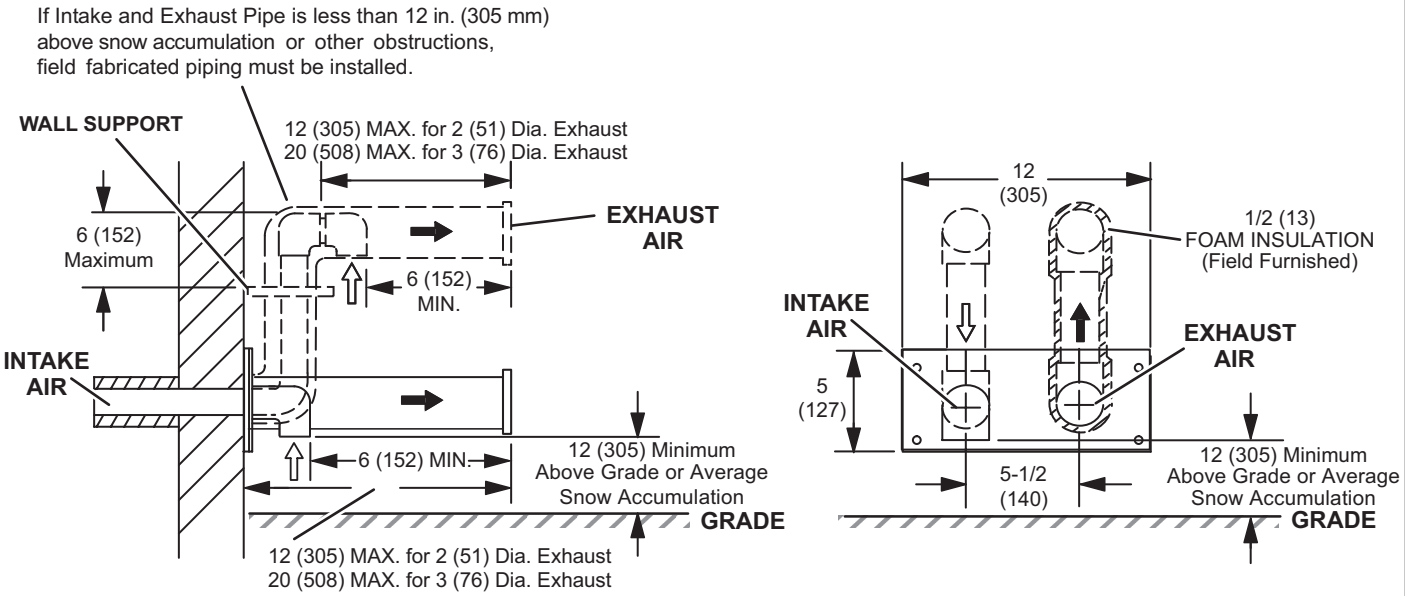

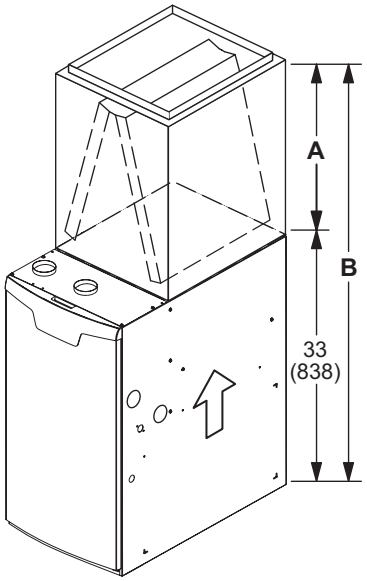

UPFLOW POSITION - CASED

Model		A		B	
CK40CT	**C35/CX35**	**in.**	**mm**	**in.**	**mm**
CK40CT-18/24A CK40CT-18/24B	C35/CX35-18/24A C35/CX35-18/24B	16-1/2	419	49-1/2	1257
CK40CT-24A CK40CT-24B	C35/CX35-24A C35/CX35-24B	18-1/2	470	51-1/2	1308
CK40CT-30A CK40CT-30B	C35/CX35-30A C35/CX35-30B	22-1/2	572	55-1/2	1410
CK40CT-30/36A CK40CT-30/36B CK40CT-30/36C	C35/CX35-30/36A C35/CX35-30/36B C35/CX35-30/36C	24-1/2	622	57-1/2	1461
CK40CT-36A CK40CT-36B	C35/CX35-36A C35/CX35-36B	24-1/2	622	57-1/2	1461
CK40CT-48B CK40CT-48C	C35/CX35-48B C35/CX35-48C	27-1/2	699	60-1/2	1537
CK40CT-49C	C35/CX35-49C	29-1/2	749	62-1/2	1588
CK40CT-50/60C	C35/CX35-50/60C	27-1/2	699	60-1/2	1537
CK40CT-60C	CX35-60C	31-1/2	800	64-1/2	1638
CK40CT-60D	CX35-60D	29-1/2	749	62-1/2	1588

UPFLOW POSITION - UNCASED

Model		A		B	
CK40UT	**C35**	**in.**	**mm**	**in.**	**mm**
CK40UT-18/24A CK40UT-18/24B	C35-18/24A C35-18/24B	14-1/8	359	47-1/8	1197
CK40UT-24A CK40UT-24B	C35-24A C35-24B	16-3/8	416	49-3/8	1254
CK40UT-30A CK40UT-30B	C35-30A C35-30B	20-3/4	527	53-3/4	1365
CK40UT-30/36A CK40UT-30/36B CK40UT-30/36C	C35-30/36A C35-30/36B C35-30/36C	22-1/4	565	55-1/4	1403
CK40UT-36A CK40UT-36B	C35-36A C35-36B	22-3/8	568	55-3/8	1407
CK40UT-48B CK40UT-48C	C35-48B C35-48C	26-1/4	667	59-1/4	1505
CK40UT-49C	C35-49C	28-1/2	724	61-1/2	1562
CK40UT-50/60C	C35-50/60C	25-7/8	657	58-7/8	1495
CK40UT-60C	C35-60C	30-5/8	778	63-5/8	1616
CK40UT-60D	C35-60D	28	711	61	1549

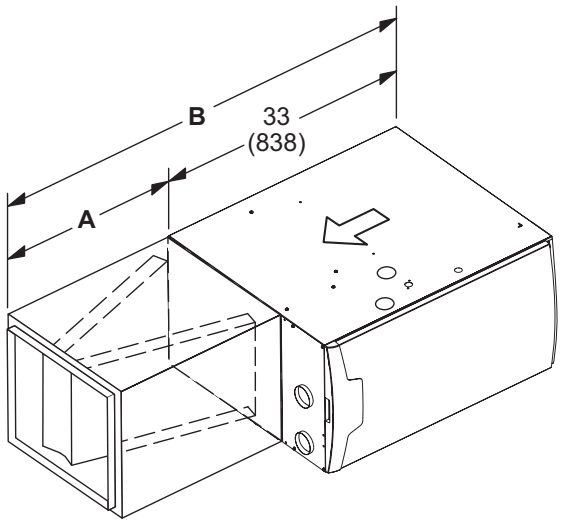

HORIZONTAL POSITION

Model		A		B	
CK40HT	**CHX35**	**in.**	**mm**	**in.**	**mm**
CK40HT-18A CK40HT-24A CK40HT-24B CK40HT-30B CK40HT-36A CK40HT-36B CK40HT-36C CK40HT-42C CK40HT-48C	CHX35-18A CHX35-24A CHX35-24B CHX35-30B CHX35-36A CHX35-36B CHX35-36C CHX35-42C CHX35-48C	26-1/2	673	59-1/2	1511
CK40CT-30A CK40CT-42B CK40CT-48B CK40CT-51/61C CK40CT-60D	CHX35-30A CHX35-42B CHX35-48B CHX35-51/61C CHX35-60D	31-1/2	880	64-1/2	1638

BLOWER DATA

EL297UH045XV36B BLOWER PERFORMANCE (less filter)

BOTTOM RETURN AIR

0 through 0.8 in. w.g. (Heating) and 0 through 1.0 in. w.g. (Cooling) External Static Pressure Range

HEATING		
[1] Heating Speed DIP Switch Settings	First Stage Heating Speed - cfm	Second Stage Heating Speed - cfm
+24%	915	1125
+18%	865	1085
+12%	805	1040
+6%	780	985
Factory Default	740	925
–6%	665	875
–12%	630	800
–18%	585	735

COOLING								
[1] Cooling Speed DIP Switch Settings	First Stage Cooling Speed - cfm				Second Stage Cooling Speed - cfm			
	Low	Medium-Low	Medium-High	[2] High	Low	Medium-Low	Medium-High	[2] High
+	630	755	850	960	905	1055	1195	1335
Factory Default	580	695	780	870	830	965	1100	1225
–	505	635	715	795	755	885	1025	1125

[1] Cooling and heating speeds are based on a combination of DIP switch settings on the furnace control. Refer to Installation Instructions for specific DIP Switch Settings.

[2] Factory default setting.

NOTES - The effect of static pressure is included in air volumes shown.
First stage HEAT is approximately 91% of the same second stage HEAT.
First stage COOL (two-stage air conditioning units only) is approximately 70% of the same second stage COOL speed position.
Continuous Fan Only speed is selectable at 28% and 38% of the selected second stage cooling speed - minimum 250 cfm.
Lennox® Smart Zoning System Applications - Minimum blower speed is 250 cfm.

EL297UH045XV36B BLOWER MOTOR WATTS (COOLING)

[1] Cooling Speed DIP Switch Settings		Motor Watts @ Various External Static Pressures - in. wg.																			
		First Stage										Second Stage									
		0.1	0.2	0.3	0.4	0.5	0.6	0.7	0.8	0.9	1.0	0.1	0.2	0.3	0.4	0.5	0.6	0.7	0.8	0.9	1.0
+ Setting																					
Cooling Speed	Low	52	67	81	96	110	125	140	154	169	183	90	115	139	164	188	213	237	262	286	311
	Med-low	64	86	107	129	150	172	193	215	236	258	138	165	191	217	244	270	297	323	350	376
	Med-High	83	107	131	156	180	204	228	252	277	301	191	221	251	281	311	341	371	401	430	460
	High	113	139	164	190	215	241	266	292	317	343	257	290	323	356	389	422	456	489	522	555
Factory Default																					
Cooling Speed	Low	48	60	73	85	97	109	121	133	145	157	73	96	120	143	166	189	212	235	258	281
	Med-low	56	75	94	113	132	150	169	188	207	225	108	134	159	184	209	235	260	285	310	336
	Med-High	69	91	114	136	159	181	203	226	248	271	155	183	210	238	265	293	320	347	375	402
	High	88	113	137	162	186	211	235	260	284	308	207	238	268	298	329	359	389	420	450	480
– Setting																					
Cooling Speed	Low	41	52	63	73	84	95	106	116	127	138	61	82	103	123	144	164	185	205	226	247
	Med-low	53	68	82	97	112	126	141	156	170	185	84	109	133	157	182	206	230	254	279	303
	Med-High	59	78	98	118	138	157	177	197	216	236	145	172	199	225	252	279	305	332	359	386
	High	71	94	117	139	162	185	208	231	254	277	163	191	219	247	275	303	331	359	387	416

BLOWER DATA

EL297UH045XV36B BLOWER PERFORMANCE (less filter)

SINGLE SIDE RETURN AIR

0 through 0.8 in. w.g. (Heating) and 0 through 1.0 in. w.g. (Cooling) External Static Pressure Range

HEATING		
[1] Heating Speed DIP Switch Settings	First Stage Heating Speed - cfm	Second Stage Heating Speed - cfm
+24%	910	1125
+18%	850	1080
+12%	785	1035
+6%	765	990
Factory Default	755	935
–6%	690	880
–12%	635	810
–18%	600	765

COOLING								
[1] Cooling Speed DIP Switch Settings	First Stage Cooling Speed - cfm				Second Stage Cooling Speed - cfm			
	Low	Medium-Low	Medium-High	[2] High	Low	Medium-Low	Medium-High	[2] High
+	610	760	845	975	920	1065	1205	1340
Factory Default	550	680	770	880	815	985	1110	1245
–	465	610	720	775	745	890	1020	1130

[1] Cooling and heating speeds are based on a combination of DIP switch settings on the furnace control. Refer to Installation Instructions for specific DIP Switch Settings.

[2] Factory default setting.

NOTES - The effect of static pressure is included in air volumes shown.
First stage HEAT is approximately 91% of the same second stage HEAT.
First stage COOL (two-stage air conditioning units only) is approximately 70% of the same second stage COOL speed position.
Continuous Fan Only speed is selectable at 28% and 38% of the selected second stage cooling speed - minimum 250 cfm.
Lennox® Smart Zoning System Applications - Minimum blower speed is 250 cfm.

EL297UH045XV36B BLOWER MOTOR WATTS (COOLING)

[1] Cooling Speed DIP Switch Settings		Motor Watts @ Various External Static Pressures - in. wg.																			
		First Stage									Second Stage										
		0	0.1	0.2	0.3	0.4	0.5	0.6	0.7	0.8	0	0.1	0.2	0.3	0.4	0.5	0.6	0.7	0.8	0.9	1.0
+ Setting																					
Cooling Speed	Low	19	37	57	74	97	116	136	151	168	55	82	104	135	158	194	221	243	270	297	314
	Med-low	34	57	80	103	124	148	168	195	216	103	123	159	193	225	254	282	307	338	361	389
	Med-High	45	74	98	123	150	179	204	236	260	164	198	225	260	287	326	352	391	428	450	478
	High	76	103	133	163	191	223	256	277	303	235	256	294	346	374	409	445	478	510	541	551
Factory Default																					
Cooling Speed	Low	16	31	52	67	85	100	118	136	150	38	68	90	106	133	162	188	212	239	262	286
	Med-low	20	45	65	85	110	125	145	170	195	75	99	128	159	187	219	251	273	299	323	350
	Med-High	38	64	88	106	130	157	180	207	230	125	145	186	216	248	278	303	331	365	388	419
	High	51	81	103	133	157	191	218	242	268	182	210	245	273	317	346	376	410	440	465	497
– Setting																					
Cooling Speed	Low	10	28	40	59	73	89	105	121	138	30	52	72	100	119	141	159	185	206	228	253
	Med-low	20	38	58	75	97	116	136	151	169	48	75	99	124	151	180	205	237	261	285	303
	Med-High	27	48	69	93	116	133	152	178	203	85	107	139	172	201	233	266	286	312	337	364
	High	38	66	89	106	131	159	184	209	235	134	155	196	223	259	290	316	344	374	399	432

BLOWER DATA

EL297UH045XV36B BLOWER PERFORMANCE (less filter)
SINGLE SIDE RETURN AIR WITH OPTIONAL RETURN AIR BASE
0 through 0.8 in. w.g. (Heating) and 0 through 1.0 in. w.g. (Cooling) External Static Pressure Range

HEATING		
[1] Heating Speed DIP Switch Settings	First Stage Heating Speed - cfm	Second Stage Heating Speed - cfm
+24%	895	1115
+18%	850	1070
+12%	795	1030
+6%	755	980
Factory Default	715	920
–6%	665	850
–12%	645	805
–18%	595	740

COOLING								
[1] Cooling Speed DIP Switch Settings	First Stage Cooling Speed - cfm				Second Stage Cooling Speed - cfm			
	Low	Medium-Low	Medium-High	[2] High	Low	Medium-Low	Medium-High	[2] High
+	605	730	845	965	895	1060	1185	1345
Factory Default	550	660	760	875	820	975	1105	1215
–	490	610	685	770	720	860	1015	1125

[1] Cooling and heating speeds are based on a combination of DIP switch settings on the furnace control. Refer to Installation Instructions for specific DIP Switch Settings.
[2] Factory default setting.

NOTES - The effect of static pressure is included in air volumes shown.
First stage HEAT is approximately 91% of the same second stage HEAT.
First stage COOL (two-stage air conditioning units only) is approximately 70% of the same second stage COOL speed position.
Continuous Fan Only speed is selectable at 28% and 38% of the selected second stage cooling speed - minimum 250 cfm.
Lennox® Smart Zoning System Applications - Minimum blower speed is 250 cfm.

EL297UH045XV36B BLOWER MOTOR WATTS (COOLING)

[1] Cooling Speed DIP Switch Settings		Motor Watts @ Various External Static Pressures - in. wg.																			
		First Stage									Second Stage										
		0	0.1	0.2	0.3	0.4	0.5	0.6	0.7	0.8	0	0.1	0.2	0.3	0.4	0.5	0.6	0.7	0.8	0.9	1.0
+ Setting																					
Cooling Speed	Low	20	36	57	77	99	111	133	149	168	54	82	99	130	157	180	210	238	259	282	308
	Med-low	28	50	72	97	118	141	161	184	207	103	122	159	189	220	250	277	303	331	353	382
	Med-High	45	74	94	121	148	170	201	221	254	162	188	227	259	283	318	353	383	414	435	473
	High	73	98	130	157	186	219	247	274	294	224	249	283	326	366	398	433	473	491	529	545
Factory Default																					
Cooling Speed	Low	14	32	47	62	82	100	119	132	149	38	63	82	109	131	161	176	210	231	250	272
	Med-low	20	40	60	80	105	120	145	160	180	74	96	125	152	182	214	242	268	289	313	335
	Med-High	31	57	76	104	126	153	170	196	223	123	143	180	215	240	272	300	326	359	379	408
	High	51	81	98	128	156	178	208	235	258	173	206	240	261	297	337	365	402	431	456	490
– Setting																					
Cooling Speed	Low	8	27	38	54	73	88	106	119	137	27	46	71	92	112	133	155	178	195	214	242
	Med-low	21	37	57	77	100	112	134	149	169	48	75	95	122	149	171	201	222	255	271	294
	Med-High	25	44	67	86	110	127	150	170	187	84	105	139	167	197	229	256	284	305	330	355
	High	34	60	79	106	128	157	173	203	227	130	153	188	225	248	282	307	339	371	392	420

BLOWER DATA

EL297UH070XV36B BLOWER PERFORMANCE (less filter)

BOTTOM RETURN AIR

0 through 0.8 in. w.g. (Heating) and 0 through 1.0 in. w.g. (Cooling) External Static Pressure Range

HEATING		
[1] Heating Speed DIP Switch Settings	First Stage Heating Speed - cfm	Second Stage Heating Speed - cfm
+24%	1095	1220
+18%	1035	1170
+12%	985	1120
+6%	915	1055
Factory Default	850	995
–6%	835	915
–12%	755	845
–18%	695	810

COOLING								
[1] Cooling Speed DIP Switch Settings	First Stage Cooling Speed - cfm				Second Stage Cooling Speed - cfm			
	Low	Medium-Low	Medium-High	[2] High	Low	Medium-Low	Medium-High	[2] High
+	635	765	885	1005	920	1085	1240	1410
Factory Default	585	700	795	910	835	990	1135	1280
–	540	640	720	810	745	895	1030	1160

[1] Cooling and heating speeds are based on a combination of DIP switch settings on the furnace control. Refer to Installation Instructions for specific DIP Switch Settings.

[2] Factory default setting.

NOTES - The effect of static pressure is included in air volumes shown.
First stage HEAT is approximately 91% of the same second stage HEAT.
First stage COOL (two-stage air conditioning units only) is approximately 70% of the same second stage COOL speed position.
Continuous Fan Only speed is selectable at 28% and 38% of the selected second stage cooling speed - minimum 250 cfm.
Lennox® Smart Zoning System Applications - Minimum blower speed is 250 cfm.

EL297UH070XV36B BLOWER MOTOR WATTS (COOLING)

[1] Cooling Speed DIP Switch Settings		Motor Watts @ Various External Static Pressures - in. wg.																			
		First Stage										Second Stage									
		0.1	0.2	0.3	0.4	0.5	0.6	0.7	0.8	0.9	1.0	0.1	0.2	0.3	0.4	0.5	0.6	0.7	0.8	0.9	1.0
+ Setting																					
Cooling Speed	Low	47	62	77	91	104	117	129	141	153	168	97	120	141	161	181	199	216	234	250	273
	Med-low	66	85	103	120	138	155	171	186	200	220	157	180	202	223	244	263	282	300	318	342
	Med-High	89	111	132	152	171	190	208	225	241	263	227	251	274	297	319	341	362	383	404	428
	High	126	148	116	136	155	172	189	205	221	224	327	352	377	399	423	445	466	487	510	534
Factory Default																					
Cooling Speed	Low	42	56	69	82	94	105	116	128	139	153	76	96	116	136	155	172	189	205	221	243
	Med-low	56	72	89	104	120	134	149	162	175	193	121	143	165	185	204	224	243	260	278	300
	Med-High	72	91	110	129	147	165	181	197	212	233	178	202	224	246	267	287	306	326	345	368
	High	95	118	139	159	178	197	215	232	248	271	247	271	294	318	340	362	384	404	424	449
– Setting																					
Cooling Speed	Low	36	50	62	74	84	94	105	116	126	138	62	79	96	113	130	147	162	177	191	210
	Med-low	48	63	78	92	106	118	130	142	154	170	88	111	133	152	172	191	208	225	241	264
	Med-High	59	76	93	109	125	141	156	170	184	202	135	158	180	201	220	239	258	276	294	317
	High	73	93	113	132	151	169	186	202	217	239	188	212	235	257	277	298	318	338	358	381

BLOWER DATA

EL297UH070XV36B BLOWER PERFORMANCE (less filter)

SINGLE SIDE RETURN AIR

0 through 0.8 in. w.g. (Heating) and 0 through 1.0 in. w.g. (Cooling) External Static Pressure Range

HEATING		
[1] Heating Speed DIP Switch Settings	First Stage Heating Speed - cfm	Second Stage Heating Speed - cfm
+24%	1090	1205
+18%	1025	1165
+12%	960	1090
+6%	890	1045
Factory Default	815	975
–6%	755	895
–12%	720	810
–18%	675	750

COOLING								
[1] Cooling Speed DIP Switch Settings	First Stage Cooling Speed - cfm				Second Stage Cooling Speed - cfm			
	Low	Medium-Low	Medium-High	[2] High	Low	Medium-Low	Medium-High	[2] High
+	590	705	805	955	840	1050	1205	1355
Factory Default	540	640	725	820	750	945	1130	1230
–	500	580	665	720	685	805	990	1110

[1] Cooling and heating speeds are based on a combination of DIP switch settings on the furnace control. Refer to Installation Instructions for specific DIP Switch Settings.

[2] Factory default setting.

NOTES - The effect of static pressure is included in air volumes shown.
First stage HEAT is approximately 91% of the same second stage HEAT.
First stage COOL (two-stage air conditioning units only) is approximately 70% of the same second stage COOL speed position.
Continuous Fan Only speed is selectable at 28% and 38% of the selected second stage cooling speed - minimum 250 cfm.
Lennox® Smart Zoning System Applications - Minimum blower speed is 250 cfm.

EL297UH070XV36B BLOWER MOTOR WATTS (COOLING)

[1] Cooling Speed DIP Switch Settings		Motor Watts @ Various External Static Pressures - in. wg.																			
		First Stage									Second Stage										
		0	0.1	0.2	0.3	0.4	0.5	0.6	0.7	0.8	0	0.1	0.2	0.3	0.4	0.5	0.6	0.7	0.8	0.9	1.0
+ Setting																					
Cooling Speed	Low	17	29	48	61	73	94	100	123	130	63	84	104	117	142	160	174	208	215	245	255
	Med-low	30	50	66	79	107	128	137	159	178	121	137	165	195	213	239	257	283	303	329	342
	Med-High	51	70	92	106	127	150	170	184	207	195	214	243	268	290	324	348	370	387	409	434
	High	88	109	134	150	184	201	221	243	265	294	309	344	372	399	421	445	474	495	520	532
Factory Default																					
Cooling Speed	Low	12	25	38	52	66	83	96	105	117	43	65	75	98	120	139	152	170	192	212	228
	Med-low	22	41	55	70	86	103	123	141	154	88	106	130	150	173	197	220	239	259	276	297
	Med-High	36	55	75	90	107	129	152	167	184	142	161	187	211	239	263	287	307	332	352	369
	High	57	76	99	116	135	153	176	197	213	220	236	267	294	323	342	364	382	411	436	455
– Setting																					
Cooling Speed	Low	8	22	32	50	60	77	86	100	116	31	48	63	83	102	122	137	150	166	188	203
	Med-low	19	32	47	63	77	93	103	120	133	53	75	91	111	129	152	169	188	210	227	251
	Med-High	25	42	58	74	90	109	131	143	154	101	120	141	170	190	215	233	256	274	298	317
	High	37	56	76	95	115	135	153	173	192	157	177	201	224	254	277	303	321	346	362	385

BLOWER DATA

EL297UH070XV36B BLOWER PERFORMANCE (less filter)

SINGLE SIDE RETURN AIR WITH OPTIONAL RETURN AIR BASE

0 through 0.8 in. w.g. (Heating) and 0 through 1.0 in. w.g. (Cooling) External Static Pressure Range

HEATING		
[1] Heating Speed DIP Switch Settings	First Stage Heating Speed - cfm	Second Stage Heating Speed - cfm
+24%	1070	1205
+18%	1020	1150
+12%	955	1100
+6%	895	1035
Factory Default	850	965
–6%	795	905
–12%	745	845
–18%	690	790

COOLING								
[1] Cooling Speed DIP Switch Settings	First Stage Cooling Speed - cfm				Second Stage Cooling Speed - cfm			
	Low	Medium-Low	Medium-High	[2] High	Low	Medium-Low	Medium-High	[2] High
+	595	715	815	950	855	1045	1205	1350
Factory Default	520	655	755	840	790	945	1090	1255
–	490	595	670	745	720	845	985	1130

[1] Cooling and heating speeds are based on a combination of DIP switch settings on the furnace control. Refer to Installation Instructions for specific DIP Switch Settings.

[2] Factory default setting.

NOTES - The effect of static pressure is included in air volumes shown.
First stage HEAT is approximately 91% of the same second stage HEAT.
First stage COOL (two-stage air conditioning units only) is approximately 70% of the same second stage COOL speed position.
Continuous Fan Only speed is selectable at 28% and 38% of the selected second stage cooling speed - minimum 250 cfm.
Lennox® Smart Zoning System Applications - Minimum blower speed is 250 cfm.

EL297UH070XV36B BLOWER MOTOR WATTS (COOLING)

[1] Cooling Speed DIP Switch Settings		Motor Watts @ Various External Static Pressures - in. wg.																			
		First Stage									Second Stage										
		0	0.1	0.2	0.3	0.4	0.5	0.6	0.7	0.8	0	0.1	0.2	0.3	0.4	0.5	0.6	0.7	0.8	0.9	1.0
+ Setting																					
Cooling Speed	Low	18	32	46	61	76	89	104	115	133	64	83	95	120	141	159	175	203	208	234	246
	Med-low	34	52	69	86	104	126	141	160	174	109	131	150	179	204	219	239	268	283	313	335
	Med-High	63	82	98	115	138	153	173	187	209	177	197	227	246	273	311	328	354	383	402	408
	High	88	107	131	148	175	192	217	235	253	261	281	312	346	382	402	430	465	489	506	533
Factory Default																					
Cooling Speed	Low	12	25	37	55	66	82	94	105	121	43	61	76	99	121	133	162	169	189	211	224
	Med-low	25	40	55	74	89	109	120	136	150	76	96	112	138	162	186	207	232	243	262	281
	Med-High	41	61	75	98	115	135	151	173	189	129	150	177	198	227	247	272	301	324	332	369
	High	63	86	99	122	139	159	180	204	216	209	227	254	282	298	324	341	364	395	413	428
– Setting																					
Cooling Speed	Low	9	20	35	48	59	75	86	94	110	29	43	63	84	99	113	131	144	164	185	197
	Med-low	16	32	45	62	75	90	103	119	138	56	71	101	112	131	158	168	184	207	235	245
	Med-High	28	43	63	77	98	115	132	145	162	88	107	129	154	183	204	214	245	263	281	308
	High	46	61	86	100	121	136	153	172	193	142	163	187	216	236	261	279	301	325	356	375

BLOWER DATA

EL297UH090XV36C BLOWER PERFORMANCE (less filter)

BOTTOM RETURN AIR

0 through 0.8 in. w.g. (Heating) and 0 through 1.0 in. w.g. (Cooling) External Static Pressure Range

HEATING		
[1] Heating Speed DIP Switch Settings	First Stage Heating Speed - cfm	Second Stage Heating Speed - cfm
+24%	1215	1300
+18%	1140	1240
+12%	1100	1170
+6%	1020	1115
Factory Default	965	1070
–6%	915	970
–12%	850	925
–18%	805	855

COOLING								
[1] Cooling Speed DIP Switch Settings	First Stage Cooling Speed - cfm				Second Stage Cooling Speed - cfm			
	Low	Medium-Low	Medium-High	[2] High	Low	Medium-Low	Medium-High	[2] High
+	660	775	865	975	910	1075	1230	1405
Factory Default	615	720	800	885	835	985	1125	1265
–	560	660	740	810	750	890	1015	1150

[1] Cooling and heating speeds are based on a combination of DIP switch settings on the furnace control. Refer to Installation Instructions for specific DIP Switch Settings.

[2] Factory default setting.

NOTES - The effect of static pressure is included in air volumes shown.
First stage HEAT is approximately 91% of the same second stage HEAT.
First stage COOL (two-stage air conditioning units only) is approximately 70% of the same second stage COOL speed position.
Continuous Fan Only speed is selectable at 28% and 38% of the selected second stage cooling speed - minimum 250 cfm.
Lennox® Smart Zoning System Applications - Minimum blower speed is 250 cfm.

EL297UH090XV36C BLOWER MOTOR WATTS (COOLING)

[1] Cooling Speed DIP Switch Settings		Motor Watts @ Various External Static Pressures - in. wg.																			
		First Stage										Second Stage									
		0.1	0.2	0.3	0.4	0.5	0.6	0.7	0.8	0.9	1.0	0.1	0.2	0.3	0.4	0.5	0.6	0.7	0.8	0.9	1.0
+ Setting																					
Cooling Speed	Low	44	60	77	92	108	123	139	155	171	187	73	94	115	138	162	186	206	227	246	271
	Med-low	56	75	93	114	134	153	171	189	208	228	108	134	159	183	207	231	257	281	304	330
	Med-High	69	90	111	133	157	180	201	219	239	263	162	187	213	240	265	289	315	342	369	393
	High	87	112	102	123	145	165	184	204	223	235	234	263	291	319	347	375	402	429	454	484
Factory Default																					
Cooling Speed	Low	39	55	71	85	99	114	127	141	153	169	63	82	102	123	145	165	184	204	223	245
	Med-low	50	66	85	103	120	137	154	172	189	207	85	109	133	156	180	205	230	251	269	297
	Med-High	60	78	98	119	140	160	179	197	216	237	125	150	176	200	225	250	273	299	324	349
	High	72	92	114	136	160	183	205	225	244	269	177	204	229	255	280	305	332	358	385	410
– Setting																					
Cooling Speed	Low	34	50	64	78	91	103	114	124	132	150	54	71	90	110	128	146	164	183	202	220
	Med-low	44	60	78	94	109	124	140	156	172	188	70	89	111	133	157	179	200	219	239	263
	Med-High	52	70	87	107	125	142	160	178	196	214	93	118	143	166	189	213	239	262	282	309
	High	61	80	99	121	142	162	181	200	219	240	132	159	184	210	234	258	281	308	335	358

BLOWER DATA

EL297UH090XV36C BLOWER PERFORMANCE (less filter)

SINGLE SIDE RETURN AIR

0 through 0.8 in. w.g. (Heating) and 0 through 1.0 in. w.g. (Cooling) External Static Pressure Range

HEATING		
[1] Heating Speed DIP Switch Settings	First Stage Heating Speed - cfm	Second Stage Heating Speed - cfm
+24%	1170	1245
+18%	1125	1190
+12%	1075	1145
+6%	1005	1075
Factory Default	935	1030
–6%	880	950
–12%	810	890
–18%	775	820

COOLING								
[1] Cooling Speed DIP Switch Settings	First Stage Cooling Speed - cfm				Second Stage Cooling Speed - cfm			
	Low	Medium-Low	Medium-High	[2] High	Low	Medium-Low	Medium-High	[2] High
+	610	705	795	920	840	1015	1165	1300
Factory Default	560	640	715	810	770	910	1050	1190
–	525	605	665	725	695	795	945	1110

[1] Cooling and heating speeds are based on a combination of DIP switch settings on the furnace control. Refer to Installation Instructions for specific DIP Switch Settings.

[2] Factory default setting.

NOTES - The effect of static pressure is included in air volumes shown.
First stage HEAT is approximately 91% of the same second stage HEAT.
First stage COOL (two-stage air conditioning units only) is approximately 70% of the same second stage COOL speed position.
Continuous Fan Only speed is selectable at 28% and 38% of the selected second stage cooling speed - minimum 250 cfm.
Lennox® Smart Zoning System Applications - Minimum blower speed is 250 cfm.

EL297UH090XV36C BLOWER MOTOR WATTS (COOLING)

[1] Cooling Speed DIP Switch Settings		Motor Watts @ Various External Static Pressures - in. wg.																			
		First Stage									Second Stage										
		0	0.1	0.2	0.3	0.4	0.5	0.6	0.7	0.8	0	0.1	0.2	0.3	0.4	0.5	0.6	0.7	0.8	0.9	1.0
+ Setting																					
Cooling Speed	Low	13	30	46	62	75	93	110	129	143	42	60	83	101	122	144	163	181	206	219	241
	Med-low	25	45	62	80	96	115	134	151	173	78	104	122	144	170	195	215	239	265	283	308
	Med-High	36	55	79	95	117	139	156	178	199	133	154	175	213	236	269	282	309	336	357	381
	High	62	83	105	128	148	163	193	210	234	210	229	259	291	317	344	366	391	415	441	466
Factory Default																					
Cooling Speed	Low	9	28	38	55	71	83	100	116	135	28	48	65	86	104	124	142	164	182	199	219
	Med-low	20	38	52	69	83	102	120	135	152	59	81	100	125	142	162	182	204	229	248	269
	Med-High	26	46	63	83	101	117	141	157	178	95	118	142	165	192	213	244	264	288	314	329
	High	39	59	81	98	121	143	161	180	202	149	171	199	229	257	285	306	330	359	389	403
– Setting																					
Cooling Speed	Low	8	23	35	52	66	80	95	108	121	21	41	56	71	91	110	126	144	164	179	197
	Med-low	12	29	44	59	75	92	111	126	140	35	56	73	95	115	137	155	176	198	216	235
	Med-High	20	37	56	71	86	104	122	143	155	70	89	114	135	157	175	199	225	242	266	282
	High	27	47	67	82	102	124	142	160	181	104	125	150	178	207	232	251	273	297	321	350

BLOWER DATA

EL297UH090XV36C BLOWER PERFORMANCE (less filter)
SINGLE SIDE RETURN AIR WITH OPTIONAL RETURN AIR BASE
0 through 0.8 in. w.g. (Heating) and 0 through 1.0 in. w.g. (Cooling) External Static Pressure Range

HEATING		
[1] Heating Speed DIP Switch Settings	First Stage Heating Speed - cfm	Second Stage Heating Speed - cfm
+24%	1170	1250
+18%	1110	1200
+12%	1045	1145
+6%	995	1070
Factory Default	940	1010
–6%	880	950
–12%	815	895
–18%	775	825

COOLING								
[1] Cooling Speed DIP Switch Settings	First Stage Cooling Speed - cfm				Second Stage Cooling Speed - cfm			
	Low	Medium-Low	Medium-High	[2] High	Low	Medium-Low	Medium-High	[2] High
+	605	715	810	930	850	995	1165	1305
Factory Default	570	660	735	820	775	905	1050	1205
–	530	600	670	725	710	800	945	1070

[1] Cooling and heating speeds are based on a combination of DIP switch settings on the furnace control. Refer to Installation Instructions for specific DIP Switch Settings.
[2] Factory default setting.

NOTES - The effect of static pressure is included in air volumes shown.
First stage HEAT is approximately 91% of the same second stage HEAT.
First stage COOL (two-stage air conditioning units only) is approximately 70% of the same second stage COOL speed position.
Continuous Fan Only speed is selectable at 28% and 38% of the selected second stage cooling speed - minimum 250 cfm.
Lennox® Smart Zoning System Applications - Minimum blower speed is 250 cfm.

EL297UH090XV36C BLOWER MOTOR WATTS (COOLING)

[1] Cooling Speed DIP Switch Settings		Motor Watts @ Various External Static Pressures - in. wg.																			
		First Stage									Second Stage										
		0	0.1	0.2	0.3	0.4	0.5	0.6	0.7	0.8	0	0.1	0.2	0.3	0.4	0.5	0.6	0.7	0.8	0.9	1.0
+ Setting																					
Cooling Speed	Low	12	29	43	59	75	92	111	123	139	41	62	86	102	123	145	165	185	205	229	253
	Med-low	24	42	61	76	97	112	132	150	169	79	108	126	148	174	190	218	248	273	294	316
	Med-High	38	56	81	99	115	138	157	176	199	131	152	184	208	237	264	289	320	339	361	390
	High	61	85	104	127	144	171	192	212	239	205	226	258	283	312	344	365	393	410	437	466
Factory Default																					
Cooling Speed	Low	9	26	37	54	67	83	97	112	130	30	50	72	87	108	127	149	167	184	209	226
	Med-low	19	37	53	67	83	101	119	135	153	62	86	101	129	144	165	189	215	232	251	275
	Med-High	27	48	65	82	101	119	139	161	177	91	114	140	163	195	220	239	265	289	315	339
	High	42	62	85	99	121	143	162	183	203	149	167	201	228	258	289	316	333	355	389	403
– Setting																					
Cooling Speed	Low	8	23	35	51	62	77	91	104	119	25	45	61	75	91	112	131	147	166	184	198
	Med-low	13	29	46	60	78	93	110	125	140	40	61	81	103	119	143	162	179	204	220	245
	Med-High	22	41	57	70	88	109	127	144	159	70	92	120	133	165	178	203	231	246	274	301
	High	29	50	69	83	106	123	143	164	183	101	124	151	180	203	227	257	276	306	326	358

BLOWER DATA

EL297UH090XV48C BLOWER PERFORMANCE (less filter)

BOTTOM RETURN AIR

0 through 0.8 in. w.g. (Heating) and 0 through 1.0 in. w.g. (Cooling) External Static Pressure Range

HEATING		
[1] Heating Speed DIP Switch Settings	First Stage Heating Speed - cfm	Second Stage Heating Speed - cfm
+24%	1490	1645
+18%	1415	1565
+12%	1330	1480
+6%	1295	1405
Factory Default	1220	1325
–6%	1150	1260
–12%	1065	1190
–18%	1010	1105

COOLING								
[1] Cooling Speed DIP Switch Settings	First Stage Cooling Speed - cfm				Second Stage Cooling Speed - cfm			
	Low	Medium-Low	Medium-High	[2] High	Low	Medium-Low	Medium-High	[2] High
+	795	950	1080	1260	1115	1355	1550	1775
Factory Default	730	870	985	1140	1015	1220	1430	1605
–	650	790	890	1020	930	1105	1285	1470

[1] Cooling and heating speeds are based on a combination of DIP switch settings on the furnace control. Refer to Installation Instructions for specific DIP Switch Settings.

[2] Factory default setting.

NOTES - The effect of static pressure is included in air volumes shown.
First stage HEAT is approximately 91% of the same second stage HEAT.
First stage COOL (two-stage air conditioning units only) is approximately 70% of the same second stage COOL speed position.
Continuous Fan Only speed is selectable at 28% and 38% of the selected second stage cooling speed - minimum 380 cfm.
Lennox® Smart Zoning System Applications - Minimum blower speed is 380 cfm.

EL297UH090XV48C BLOWER MOTOR WATTS (COOLING)

[1] Cooling Speed DIP Switch Settings		Motor Watts @ Various External Static Pressures - in. wg.																			
		First Stage									Second Stage										
		0	0.1	0.2	0.3	0.4	0.5	0.6	0.7	0.8	0	0.1	0.2	0.3	0.4	0.5	0.6	0.7	0.8	0.9	1.0
+ Setting																					
Cooling Speed	Low	38	62	81	101	122	143	165	188	214	89	123	148	175	200	228	257	287	318	349	381
	Med-low	63	88	109	133	158	184	211	226	253	159	196	226	257	288	320	353	386	421	457	492
	Med-High	85	116	140	166	189	217	246	275	305	246	289	321	353	387	421	457	494	532	571	615
	High	132	165	194	223	253	284	316	349	381	382	426	464	497	537	577	610	650	696	738	781
Factory Default																					
Cooling Speed	Low	31	54	71	91	110	130	151	174	196	70	101	123	148	176	200	223	253	280	308	337
	Med-low	49	74	95	116	138	161	185	211	232	115	151	178	206	236	266	297	328	361	394	426
	Med-High	68	95	117	141	167	196	215	242	270	188	225	258	290	323	356	390	424	461	497	535
	High	97	129	155	179	206	236	265	296	327	278	321	354	387	421	457	492	531	568	609	650
– Setting																					
Cooling Speed	Low	28	53	62	80	98	117	136	156	177	55	82	102	124	148	173	199	221	241	267	295
	Med-low	37	61	81	101	121	142	164	187	213	84	118	143	171	193	223	254	284	314	345	375
	Med-High	52	78	98	120	143	167	193	218	236	136	173	201	229	260	289	321	353	386	421	456
	High	74	102	125	150	178	200	226	256	284	206	243	277	309	344	377	412	449	486	520	556

BLOWER DATA

EL297UH090XV48C BLOWER PERFORMANCE (less filter)

SINGLE SIDE RETURN AIR

0 through 0.8 in. w.g. (Heating) and 0 through 1.0 in. w.g. (Cooling) External Static Pressure Range

HEATING		
[1] Heating Speed DIP Switch Settings	First Stage Heating Speed - cfm	Second Stage Heating Speed - cfm
+24%	1400	1570
+18%	1380	1475
+12%	1310	1415
+6%	1255	1360
Factory Default	1210	1285
–6%	1125	1260
–12%	1080	1150
–18%	990	1115

COOLING								
[1] Cooling Speed DIP Switch Settings	First Stage Cooling Speed - cfm				Second Stage Cooling Speed - cfm			
	Low	Medium-Low	Medium-High	[2] High	Low	Medium-Low	Medium-High	[2] High
+	820	1005	1135	1290	1140	1340	1525	1725
Factory Default	755	880	1025	1150	1040	1235	1395	1565
–	680	815	925	1065	910	1120	1275	1400

[1] Cooling and heating speeds are based on a combination of DIP switch settings on the furnace control. Refer to Installation Instructions for specific DIP Switch Settings.

[2] Factory default setting.

NOTES - The effect of static pressure is included in air volumes shown.
First stage HEAT is approximately 91% of the same second stage HEAT.
First stage COOL (two-stage air conditioning units only) is approximately 70% of the same second stage COOL speed position.
Continuous Fan Only speed is selectable at 28% and 38% of the selected second stage cooling speed - minimum 380 cfm.
Lennox® Smart Zoning System Applications - Minimum blower speed is 380 cfm.

EL297UH090XV48C BLOWER MOTOR WATTS (COOLING)

[1] Cooling Speed DIP Switch Settings		Motor Watts @ Various External Static Pressures - in. wg.																			
		First Stage									Second Stage										
		0	0.1	0.2	0.3	0.4	0.5	0.6	0.7	0.8	0	0.1	0.2	0.3	0.4	0.5	0.6	0.7	0.8	0.9	1.0
+ Setting																					
Cooling Speed	Low	43	65	85	96	119	134	156	179	199	102	131	155	189	216	249	282	304	331	359	387
	Med-low	66	95	113	140	164	189	212	242	268	173	196	242	271	306	337	362	405	430	460	493
	Med-High	95	126	151	180	210	242	277	302	320	243	277	316	371	412	457	492	534	566	605	651
	High	143	166	203	243	282	309	333	368	389	368	410	453	511	562	604	651	690	730	771	809
Factory Default																					
Cooling Speed	Low	36	48	73	86	108	120	140	152	168	75	101	125	156	178	215	244	259	288	320	339
	Med-low	52	75	95	110	130	161	176	201	216	129	154	190	218	257	295	322	346	377	404	434
	Med-High	70	94	125	146	172	198	230	252	275	190	222	270	299	325	368	398	439	470	508	549
	High	100	131	162	197	228	260	298	328	347	275	310	359	400	445	469	525	562	597	642	682
– Setting																					
Cooling Speed	Low	32	45	58	80	97	110	121	133	154	62	87	109	129	152	173	199	221	250	266	295
	Med-low	45	63	82	99	119	137	150	171	193	95	124	150	180	207	240	269	297	325	356	375
	Med-High	55	82	101	119	145	167	192	213	239	148	177	205	244	286	309	346	370	402	431	467
	High	76	101	137	160	188	218	245	271	302	198	239	274	308	349	384	426	471	500	542	576

BLOWER DATA

EL297UH090XV48C BLOWER PERFORMANCE (less filter)

SINGLE SIDE RETURN AIR WITH OPTIONAL RETURN AIR BASE

0 through 0.8 in. w.g. (Heating) and 0 through 1.0 in. w.g. (Cooling) External Static Pressure Range

HEATING		
[1] Heating Speed DIP Switch Settings	First Stage Heating Speed - cfm	Second Stage Heating Speed - cfm
+24%	1430	1565
+18%	1400	1500
+12%	1330	1410
+6%	1260	1380
Factory Default	1195	1305
–6%	1135	1275
–12%	1065	1180
–18%	990	1095

COOLING								
[1] Cooling Speed DIP Switch Settings	First Stage Cooling Speed - cfm				Second Stage Cooling Speed - cfm			
	Low	Medium-Low	Medium-High	[2] High	Low	Medium-Low	Medium-High	[2] High
+	840	955	1120	1280	1160	1360	1530	1740
Factory Default	775	910	1010	1170	1060	1240	1400	1590
–	695	815	930	1045	925	1130	1295	1440

[1] Cooling and heating speeds are based on a combination of DIP switch settings on the furnace control. Refer to Installation Instructions for specific DIP Switch Settings.

[2] Factory default setting.

NOTES - The effect of static pressure is included in air volumes shown.
First stage HEAT is approximately 91% of the same second stage HEAT.
First stage COOL (two-stage air conditioning units only) is approximately 70% of the same second stage COOL speed position.
Continuous Fan Only speed is selectable at 28% and 38% of the selected second stage cooling speed - minimum 380 cfm.
Lennox® Smart Zoning System Applications - Minimum blower speed is 380 cfm.

EL297UH090XV48C BLOWER MOTOR WATTS (COOLING)

[1] Cooling Speed DIP Switch Settings		Motor Watts @ Various External Static Pressures - in. wg.																			
		First Stage									Second Stage										
		0	0.1	0.2	0.3	0.4	0.5	0.6	0.7	0.8	0	0.1	0.2	0.3	0.4	0.5	0.6	0.7	0.8	0.9	1.0
+ Setting																					
Cooling Speed	Low	40	60	80	96	115	133	151	176	192	94	127	151	180	207	241	274	303	340	358	381
	Med-low	58	87	108	132	158	188	212	240	264	166	195	233	269	300	328	356	394	426	455	496
	Med-High	91	126	145	169	205	228	255	288	320	234	273	314	354	403	431	484	514	571	599	632
	High	134	163	195	231	264	297	320	359	381	337	378	426	470	518	557	604	654	684	722	768
Factory Default																					
Cooling Speed	Low	36	47	70	88	103	120	139	146	167	75	100	130	149	183	212	238	260	293	315	337
	Med-low	51	75	93	115	135	158	187	201	222	132	156	192	220	259	284	319	343	376	404	423
	Med-High	59	92	112	141	166	200	228	259	281	183	215	262	284	315	348	387	427	464	494	523
	High	97	130	156	191	215	256	283	310	343	253	292	331	379	414	462	497	546	575	613	661
– Setting																					
Cooling Speed	Low	26	41	55	73	88	104	120	134	149	56	84	104	123	149	174	199	224	248	268	290
	Med-low	41	62	79	98	117	132	154	172	195	94	122	146	177	208	239	264	295	320	352	368
	Med-High	50	75	95	120	147	164	187	209	243	140	170	197	234	263	301	327	357	377	412	453
	High	72	102	125	154	178	208	234	262	293	196	235	264	302	332	377	413	441	482	518	548

BLOWER DATA

EL297UH090XV60C BLOWER PERFORMANCE (less filter)

BOTTOM RETURN AIR

0 through 0.8 in. w.g. (Heating) and 0 through 1.0 in. w.g. (Cooling) External Static Pressure Range

HEATING		
[1] Heating Speed DIP Switch Settings	First Stage Heating Speed - cfm	Second Stage Heating Speed - cfm
+24%	1490	1985
+18%	1435	1915
+12%	1335	1805
+6%	1280	1645
Factory Default	1185	1625
–6%	1095	1530
–12%	990	1450
–18%	900	1345

COOLING								
[1] Cooling Speed DIP Switch Settings	First Stage Cooling Speed - cfm				Second Stage Cooling Speed - cfm			
	Low	Medium-Low	Medium-High	[2] High	Low	Medium-Low	Medium-High	[2] High
+	1085	1240	1360	1540	1545	1770	1970	2210
Factory Default	1000	1135	1250	1385	1390	1605	1800	1980
–	895	1040	1135	1255	1250	1440	1620	1800

[1] Cooling and heating speeds are based on a combination of DIP switch settings on the furnace control. Refer to Installation Instructions for specific DIP Switch Settings.

[2] Factory default setting.

NOTES - The effect of static pressure is included in air volumes shown.
First stage HEAT is approximately 91% of the same second stage HEAT.
First stage COOL (two-stage air conditioning units only) is approximately 70% of the same second stage COOL speed position.
Continuous Fan Only speed is selectable at 28% and 38% of the selected second stage cooling speed - minimum 450 cfm.
Lennox® Smart Zoning System Applications - Minimum blower speed is 450 cfm.

EL297UH090XV60C BLOWER MOTOR WATTS (COOLING)

[1] Cooling Speed DIP Switch Settings		Motor Watts @ Various External Static Pressures - in. wg.																			
		First Stage										Second Stage									
		0.1	0.2	0.3	0.4	0.5	0.6	0.7	0.8	0.9	1.0	0.1	0.2	0.3	0.4	0.5	0.6	0.7	0.8	0.9	1.0
+ Setting																					
Cooling Speed	Low	122	143	165	188	210	235	260	286	314	333	277	310	343	377	410	445	481	518	555	586
	Med-low	166	189	214	239	265	293	321	349	382	403	401	438	476	515	552	586	629	670	710	745
	Med-High	205	231	259	289	320	352	385	420	457	482	548	589	631	667	714	755	804	850	900	937
	High	277	310	343	377	410	445	481	518	555	586	777	822	864	906	947	994	1040	1037	1021	1013
Factory Default																					
Cooling Speed	Low	101	121	142	164	185	209	232	257	282	301	212	241	270	300	332	365	399	435	470	497
	Med-low	136	158	180	204	227	252	278	305	334	354	307	340	372	407	442	477	514	552	589	621
	Med-High	169	193	217	243	269	298	325	354	388	409	417	455	495	535	572	614	653	695	738	775
	High	212	241	270	300	332	365	400	435	470	497	559	601	643	679	720	764	809	854	898	936
– Setting																					
Cooling Speed	Low	81	100	119	140	161	183	205	228	252	270	172	196	220	246	273	300	329	359	391	413
	Med-low	110	130	152	173	196	218	243	268	295	313	225	257	290	323	354	387	422	458	493	523
	Med-High	136	158	180	204	227	252	278	305	334	354	314	351	382	417	451	488	524	562	599	631
	High	172	196	220	245	273	300	329	358	391	413	417	455	495	535	572	614	653	695	738	775

BLOWER DATA

EL297UH090XV60C BLOWER PERFORMANCE (less filter)

SINGLE SIDE RETURN AIR − Air volumes in **bold** (over 1800 cfm) require Optional Return Air Base and field fabricated transition to accommodate 20 x 25 x 1 in. air filter in order to maintain proper air velocity.

0 through 0.8 in. w.g. (Heating) and 0 through 1.0 in. w.g. (Cooling) External Static Pressure Range

HEATING		
[1] Heating Speed DIP Switch Settings	First Stage Heating Speed - cfm	Second Stage Heating Speed - cfm
+24%	1445	**1920**
+18%	1385	**1875**
+12%	1275	1735
+6%	1245	1600
Factory Default	1155	1565
–6%	1070	1480
–12%	975	1400
–18%	920	1275

COOLING								
[1] Cooling Speed DIP Switch Settings	First Stage Cooling Speed - cfm				Second Stage Cooling Speed - cfm			
	Low	Medium-Low	Medium-High	[2] High	Low	Medium-Low	Medium-High	[2] High
+	1040	1225	1380	1550	1555	1715	**1920**	**2135**
Factory Default	960	1085	1225	1415	1430	1565	1790	**1980**
–	840	990	1085	1250	1280	1450	1580	1790

[1] Cooling and heating speeds are based on a combination of DIP switch settings on the furnace control. Refer to Installation Instructions for specific DIP Switch Settings.
[2] Factory default setting.

NOTES - The effect of static pressure is included in air volumes shown.
First stage HEAT is approximately 91% of the same second stage HEAT.
First stage COOL (two-stage air conditioning units only) is approximately 70% of the same second stage COOL speed position.
Continuous Fan Only speed is selectable at 28% and 38% of the selected second stage cooling speed - minimum 450 cfm.
Lennox® Smart Zoning System Applications - Minimum blower speed is 450 cfm.

EL297UH090XV60C BLOWER MOTOR WATTS (COOLING)

[1] Cooling Speed DIP Switch Settings		Motor Watts @ Various External Static Pressures - in. wg.																			
		First Stage									Second Stage										
		0	0.1	0.2	0.3	0.4	0.5	0.6	0.7	0.8	0	0.1	0.2	0.3	0.4	0.5	0.6	0.7	0.8	0.9	1.0
+ Setting																					
Cooling Speed	Low	66	95	123	147	173	204	233	260	290	241	273	315	357	405	433	466	519	547	584	620
	Med-low	108	139	173	210	248	283	315	342	376	332	374	428	489	518	568	631	665	719	762	813
	Med-High	159	192	233	272	314	359	386	421	457	518	557	601	675	713	772	819	873	913	949	987
	High	241	273	315	357	405	433	466	519	547	713	750	822	866	946	986	1042	1085	1116	1144	1184
Factory Default																					
Cooling Speed	Low	55	81	101	126	144	165	194	217	243	181	204	251	292	323	369	403	444	474	496	525
	Med-low	75	109	134	159	194	226	255	282	316	270	304	361	389	433	473	506	547	602	642	665
	Med-High	108	144	180	211	248	293	320	357	391	374	410	467	512	583	618	670	723	778	797	839
	High	181	204	251	292	323	369	403	444	474	542	579	642	684	743	809	843	883	942	991	1019
– Setting																					
Cooling Speed	Low	36	56	71	102	119	141	161	179	198	113	142	181	221	255	300	325	352	395	424	456
	Med-low	57	84	110	133	151	175	210	234	257	170	208	209	303	343	382	417	455	489	509	552
	Med-High	75	109	134	159	194	226	255	282	316	264	299	357	387	426	478	501	551	586	635	682
	High	113	142	181	221	255	300	325	352	395	374	410	467	512	583	618	670	723	778	797	839

BLOWER DATA

EL297UH110XV48C BLOWER PERFORMANCE (less filter)

BOTTOM RETURN AIR

0 through 0.8 in. w.g. (Heating) and 0 through 1.0 in. w.g. (Cooling) External Static Pressure Range

HEATING		
[1] Heating Speed DIP Switch Settings	First Stage Heating Speed - cfm	Second Stage Heating Speed - cfm
+24%	1470	1605
+18%	1450	1495
+12%	1385	1445
+6%	1295	1385
Factory Default	1225	1305
–6%	1160	1225
–12%	1090	1150
–18%	1035	1070

COOLING								
[1] Cooling Speed DIP Switch Settings	First Stage Cooling Speed - cfm				Second Stage Cooling Speed - cfm			
	Low	Medium-Low	Medium-High	[2] High	Low	Medium-Low	Medium-High	[2] High
+	765	920	1040	1230	1085	1310	1515	1745
Factory Default	705	835	960	1100	985	1185	1395	1565
–	635	765	860	985	890	1070	1245	1425

[1] Cooling and heating speeds are based on a combination of DIP switch settings on the furnace control. Refer to Installation Instructions for specific DIP Switch Settings.

[2] Factory default setting.

NOTES - The effect of static pressure is included in air volumes shown.
First stage HEAT is approximately 91% of the same second stage HEAT.
First stage COOL (two-stage air conditioning units only) is approximately 70% of the same second stage COOL speed position.
Continuous Fan Only speed is selectable at 28% and 38% of the selected second stage cooling speed - minimum 380 cfm.
Lennox® Smart Zoning System Applications - Minimum blower speed is 380 cfm.

EL297UH110XV48C BLOWER MOTOR WATTS (COOLING)

[1] Cooling Speed DIP Switch Settings		Motor Watts @ Various External Static Pressures - in. wg.																			
		First Stage									Second Stage										
		0	0.1	0.2	0.3	0.4	0.5	0.6	0.7	0.8	0	0.1	0.2	0.3	0.4	0.5	0.6	0.7	0.8	0.9	1.0
+ Setting																					
Cooling Speed	Low	32	58	73	90	109	130	151	175	199	73	104	128	152	178	203	230	257	285	314	344
	Med-low	54	78	97	118	141	163	184	207	231	138	171	199	227	256	285	313	343	374	407	441
	Med-High	70	99	121	145	169	195	221	248	276	212	251	281	313	344	377	409	445	480	517	554
	High	115	145	171	197	225	253	281	310	340	316	360	396	431	465	502	545	582	618	662	707
Factory Default																					
Cooling Speed	Low	31	58	64	81	100	119	139	159	181	55	86	107	129	151	174	201	227	254	281	309
	Med-low	41	65	83	102	122	145	170	191	210	100	132	157	183	209	236	264	292	321	352	384
	Med-High	56	82	102	125	147	167	192	218	245	161	197	226	256	286	317	348	380	413	448	482
	High	83	111	135	160	185	212	238	266	293	234	274	305	336	369	402	437	471	507	544	582
– Setting																					
Cooling Speed	Low	30	57	58	73	90	107	124	142	162	45	71	90	110	132	156	177	198	220	245	270
	Med-low	30	57	72	90	109	129	151	175	201	68	100	123	147	173	199	225	252	280	309	339
	Med-High	45	70	87	106	127	150	173	194	214	118	151	177	204	231	259	288	316	347	378	411
	High	60	88	110	132	154	178	204	230	258	173	209	239	269	300	332	365	397	431	466	501

BLOWER DATA

EL297UH110XV48C BLOWER PERFORMANCE (less filter)

SINGLE SIDE RETURN AIR

0 through 0.8 in. w.g. (Heating) and 0 through 1.0 in. w.g. (Cooling) External Static Pressure Range

HEATING		
[1] Heating Speed DIP Switch Settings	First Stage Heating Speed - cfm	Second Stage Heating Speed - cfm
+24%	1480	1580
+18%	1410	1505
+12%	1330	1415
+6%	1255	1365
Factory Default	1190	1270
–6%	1130	1205
–12%	1070	1120
–18%	1020	1060

COOLING								
[1] Cooling Speed DIP Switch Settings	First Stage Cooling Speed - cfm				Second Stage Cooling Speed - cfm			
	Low	Medium-Low	Medium-High	[2] High	Low	Medium-Low	Medium-High	[2] High
+	795	975	1065	1200	1085	1295	1515	1695
Factory Default	755	855	1000	1110	1015	1180	1375	1565
–	700	785	885	1025	920	1070	1235	1395

[1] Cooling and heating speeds are based on a combination of DIP switch settings on the furnace control. Refer to Installation Instructions for specific DIP Switch Settings.

[2] Factory default setting.

NOTES - The effect of static pressure is included in air volumes shown.
First stage HEAT is approximately 91% of the same second stage HEAT.
First stage COOL (two-stage air conditioning units only) is approximately 70% of the same second stage COOL speed position.
Continuous Fan Only speed is selectable at 28% and 38% of the selected second stage cooling speed - minimum 380 cfm.
Lennox® Smart Zoning System Applications - Minimum blower speed is 380 cfm.

EL297UH110XV48C BLOWER MOTOR WATTS (COOLING)

[1] Cooling Speed DIP Switch Settings		Motor Watts @ Various External Static Pressures - in. wg.																			
		First Stage									Second Stage										
		0	0.1	0.2	0.3	0.4	0.5	0.6	0.7	0.8	0	0.1	0.2	0.3	0.4	0.5	0.6	0.7	0.8	0.9	1.0
+ Setting																					
Cooling Speed	Low	35	58	79	99	120	148	166	192	209	79	107	142	168	196	225	254	286	314	344	376
	Med-low	52	81	103	132	153	178	212	236	262	130	167	199	237	272	313	350	392	419	457	486
	Med-High	93	128	156	183	207	246	274	314	339	215	246	290	334	375	416	457	490	528	569	598
	High	108	144	175	207	241	276	308	345	376	287	333	383	427	482	515	571	614	666	716	756
Factory Default																					
Cooling Speed	Low	28	49	69	92	110	128	147	175	192	63	88	122	143	169	198	224	250	281	311	330
	Med-low	40	65	85	110	135	155	180	205	235	100	136	166	195	227	261	291	329	358	394	423
	Med-High	59	85	115	139	163	190	220	245	274	154	192	229	270	309	345	383	428	459	503	534
	High	85	116	148	175	201	235	263	299	325	245	280	328	370	412	444	488	521	570	608	650
– Setting																					
Cooling Speed	Low	25	42	60	82	103	113	137	152	173	46	72	94	120	146	170	197	226	249	268	293
	Med-low	39	62	82	102	120	140	165	187	207	74	99	137	162	193	218	247	276	305	337	366
	Med-High	43	71	92	116	142	165	190	217	243	113	150	181	214	247	286	320	358	388	425	451
	High	65	89	125	146	173	201	227	254	285	164	202	244	285	315	356	398	441	476	518	550

BLOWER DATA

EL297UH110XV48C BLOWER PERFORMANCE (less filter)
SINGLE SIDE RETURN AIR WITH OPTIONAL RETURN AIR BASE
0 through 0.8 in. w.g. (Heating) and 0 through 1.0 in. w.g. (Cooling) External Static Pressure Range

HEATING		
[1] Heating Speed DIP Switch Settings	First Stage Heating Speed - cfm	Second Stage Heating Speed - cfm
+24%	1465	1560
+18%	1370	1490
+12%	1310	1400
+6%	1235	1340
Factory Default	1185	1270
–6%	1120	1210
–12%	1060	1120
–18%	1015	1065

COOLING								
[1] Cooling Speed DIP Switch Settings	First Stage Cooling Speed - cfm				Second Stage Cooling Speed - cfm			
	Low	Medium-Low	Medium-High	[2] High	Low	Medium-Low	Medium-High	[2] High
+	800	935	1055	1190	1085	1285	1500	1680
Factory Default	745	860	980	1100	1015	1185	1355	1550
–	670	790	890	1025	920	1075	1240	1385

[1] Cooling and heating speeds are based on a combination of DIP switch settings on the furnace control. Refer to Installation Instructions for specific DIP Switch Settings.
[2] Factory default setting.

NOTES - The effect of static pressure is included in air volumes shown.
First stage HEAT is approximately 91% of the same second stage HEAT.
First stage COOL (two-stage air conditioning units only) is approximately 70% of the same second stage COOL speed position.
Continuous Fan Only speed is selectable at 28% and 38% of the selected second stage cooling speed - minimum 380 cfm.
Lennox® Smart Zoning System Applications - Minimum blower speed is 380 cfm.

EL297UH110XV48C BLOWER MOTOR WATTS (COOLING)

[1] Cooling Speed DIP Switch Settings		Motor Watts @ Various External Static Pressures - in. wg.																			
		First Stage									Second Stage										
		0	0.1	0.2	0.3	0.4	0.5	0.6	0.7	0.8	0	0.1	0.2	0.3	0.4	0.5	0.6	0.7	0.8	0.9	1.0
+ Setting																					
Cooling Speed	Low	35	58	79	99	120	148	166	192	209	73	108	132	158	184	214	244	279	309	336	363
	Med-low	44	75	92	117	150	170	198	230	249	110	150	178	209	248	288	324	355	389	430	460
	Med-High	69	102	126	154	178	206	235	274	299	187	230	262	305	337	378	429	463	501	536	573
	High	94	133	162	185	216	255	294	321	360	270	319	361	403	440	494	538	580	629	670	718
Factory Default																					
Cooling Speed	Low	27	50	69	87	102	127	150	168	192	59	88	116	136	161	194	218	251	272	302	325
	Med-low	35	60	80	100	125	150	175	195	225	86	126	154	177	205	242	280	306	345	377	409
	Med-High	54	83	107	128	157	184	210	243	263	131	172	203	240	279	318	351	390	426	469	500
	High	78	113	137	162	189	221	252	284	317	210	252	291	327	376	413	456	493	529	570	620
– Setting																					
Cooling Speed	Low	24	42	65	80	93	116	135	155	173	37	66	89	111	140	163	190	202	239	266	296
	Med-low	32	57	75	94	114	136	161	184	205	71	104	128	155	180	208	237	276	302	327	352
	Med-High	38	65	85	106	135	158	184	200	233	97	137	166	191	225	264	304	330	367	402	434
	High	61	91	118	139	164	196	221	255	276	145	182	220	259	299	333	374	410	449	487	523

BLOWER DATA

EL297UH110XV60C BLOWER PERFORMANCE (less filter)

BOTTOM RETURN AIR

0 through 0.8 in. w.g. (Heating) and 0 through 1.0 in. w.g. (Cooling) External Static Pressure Range

HEATING		
[1] Heating Speed DIP Switch Settings	First Stage Heating Speed - cfm	Second Stage Heating Speed - cfm
+24%	1385	1965
+18%	1475	1880
+12%	1355	1790
+6%	1370	1725
Factory Default	1200	1630
–6%	1140	1550
–12%	1070	1460
–18%	980	1345

COOLING								
[1] Cooling Speed DIP Switch Settings	First Stage Cooling Speed - cfm				Second Stage Cooling Speed - cfm			
	Low	Medium-Low	Medium-High	[2] High	Low	Medium-Low	Medium-High	[2] High
+	1085	1235	1335	1525	1525	1745	1950	2185
Factory Default	990	1130	1240	1365	1375	1580	1780	1970
–	895	1025	1130	1250	1250	1415	1600	1780

[1] Cooling and heating speeds are based on a combination of DIP switch settings on the furnace control. Refer to Installation Instructions for specific DIP Switch Settings.

[2] Factory default setting.

NOTES - The effect of static pressure is included in air volumes shown.
First stage HEAT is approximately 91% of the same second stage HEAT.
First stage COOL (two-stage air conditioning units only) is approximately 70% of the same second stage COOL speed position.
Continuous Fan Only speed is selectable at 28% and 38% of the selected second stage cooling speed - minimum 450 cfm.
Lennox® Smart Zoning System Applications - Minimum blower speed is 450 cfm.

EL297UH110XV60C BLOWER MOTOR WATTS (COOLING)

[1] Cooling Speed DIP Switch Settings		Motor Watts @ Various External Static Pressures - in. wg.																			
		First Stage										Second Stage									
		0.1	0.2	0.3	0.4	0.5	0.6	0.7	0.8	0.9	1.0	0.1	0.2	0.3	0.4	0.5	0.6	0.7	0.8	0.9	1.0
+ Setting																					
Cooling Speed	Low	105	128	151	175	199	223	248	274	301	323	232	265	297	331	366	402	438	476	514	545
	Med-low	136	165	193	220	248	275	303	329	359	386	335	372	410	445	484	524	568	607	647	684
	Med-High	166	196	226	256	288	320	353	386	422	450	456	495	537	579	621	664	711	763	814	849
	High	232	265	297	331	366	402	438	476	514	545	636	678	717	762	809	856	906	954	1002	1043
Factory Default																					
Cooling Speed	Low	85	108	130	152	176	199	223	248	273	295	173	204	234	266	299	332	365	399	436	465
	Med-low	116	139	164	188	212	237	263	290	318	340	257	289	323	357	392	429	467	504	543	575
	Med-High	139	166	193	222	249	277	306	334	364	390	351	389	426	466	505	546	586	628	671	708
	High	173	204	235	266	299	332	366	400	436	465	467	507	548	590	633	676	718	766	815	852
– Setting																					
Cooling Speed	Low	68	89	110	132	153	176	199	223	247	267	141	169	197	224	253	280	308	337	368	394
	Med-low	92	114	138	160	184	208	232	258	283	305	188	218	252	283	316	351	386	419	457	487
	Med-High	116	139	164	188	212	237	263	290	318	340	264	298	332	367	402	438	474	513	552	584
	High	141	169	197	224	253	280	308	337	368	394	351	389	426	466	505	546	586	628	671	708

BLOWER DATA

EL297UH110XV60C BLOWER PERFORMANCE (less filter)

SINGLE SIDE RETURN AIR − Air volumes in **bold** (over 1800 cfm) require Optional Return Air Base and field fabricated transition to accommodate 20 x 25 x 1 in. air filter in order to maintain proper air velocity.

0 through 0.8 in. w.g. (Heating) and 0 through 1.0 in. w.g. (Cooling) External Static Pressure Range

HEATING		
[1] Heating Speed DIP Switch Settings	First Stage Heating Speed - cfm	Second Stage Heating Speed - cfm
+24%	1495	**1910**
+18%	1425	**1840**
+12%	1335	1785
+6%	1210	1710
Factory Default	1195	1555
–6%	1140	1510
–12%	1075	1410
–18%	975	1300

COOLING								
[1] Cooling Speed DIP Switch Settings	First Stage Cooling Speed - cfm				Second Stage Cooling Speed - cfm			
	Low	Medium-Low	Medium-High	[2] High	Low	Medium-Low	Medium-High	[2] High
+	1050	1195	1315	1495	1515	1710	**1870**	**2065**
Factory Default	960	1095	1220	1355	1360	1555	1755	**1890**
–	850	985	1095	1220	1215	1400	1555	1755

[1] Cooling and heating speeds are based on a combination of DIP switch settings on the furnace control. Refer to Installation Instructions for specific DIP Switch Settings.
[2] Factory default setting.

NOTES - The effect of static pressure is included in air volumes shown.
First stage HEAT is approximately 91% of the same second stage HEAT.
First stage COOL (two-stage air conditioning units only) is approximately 70% of the same second stage COOL speed position.
Continuous Fan Only speed is selectable at 28% and 38% of the selected second stage cooling speed - minimum 450 cfm.
Lennox® Smart Zoning System Applications - Minimum blower speed is 450 cfm.

EL297UH110XV60C BLOWER MOTOR WATTS (COOLING)

[1] Cooling Speed DIP Switch Settings		Motor Watts @ Various External Static Pressures - in. wg.																			
		First Stage									Second Stage										
		0	0.1	0.2	0.3	0.4	0.5	0.6	0.7	0.8	0	0.1	0.2	0.3	0.4	0.5	0.6	0.7	0.8	0.9	1.0
+ Setting																					
Cooling Speed	Low	67	95	124	148	172	212	241	260	287	215	247	287	338	378	412	448	497	535	557	600
	Med-low	112	140	176	200	232	262	303	323	350	332	360	420	459	500	551	601	636	666	705	747
	Med-High	151	191	221	251	283	321	356	392	431	478	513	560	611	672	701	750	801	843	865	916
	High	215	247	287	338	378	412	448	497	535	661	699	751	813	856	901	955	1005	1047	1088	1131
Factory Default																					
Cooling Speed	Low	53	82	99	128	153	172	199	231	251	156	198	217	270	297	328	371	403	440	474	515
	Med-low	81	109	136	165	198	229	259	281	307	244	272	327	361	410	446	494	527	564	600	636
	Med-High	113	144	174	209	233	269	304	323	362	387	415	458	513	552	602	644	680	719	763	807
	High	156	198	217	270	297	328	371	403	440	505	541	594	624	675	727	780	812	843	886	925
– Setting																					
Cooling Speed	Low	43	62	84	111	125	152	167	189	211	114	137	183	206	235	264	303	330	358	388	417
	Med-low	62	86	115	134	162	187	219	238	262	165	199	236	281	308	357	381	426	466	492	531
	Med-High	81	109	136	165	198	229	259	281	307	239	269	326	354	413	463	498	523	573	601	656
	High	114	137	183	206	235	264	303	330	358	387	415	458	513	552	602	644	680	719	744	776

BLOWER DATA

EL297UH135XV60D BLOWER PERFORMANCE (less filter)

BOTTOM RETURN AIR

0 through 0.8 in. w.g. (Heating) and 0 through 1.0 in. w.g. (Cooling) External Static Pressure Range

HEATING		
[1] Heating Speed DIP Switch Settings	First Stage Heating Speed - cfm	Second Stage Heating Speed - cfm
+24%	1770	2125
+18%	1680	2015
+12%	1610	1935
+6%	1485	1855
Factory Default	1440	1740
–6%	1360	1650
–12%	1285	1565
–18%	1215	1460

COOLING								
[1] Cooling Speed DIP Switch Settings	First Stage Cooling Speed - cfm				Second Stage Cooling Speed - cfm			
	Low	Medium-Low	Medium-High	[2] High	Low	Medium-Low	Medium-High	[2] High
+	1095	1260	1400	1590	1585	1805	2020	2275
Factory Default	1000	1145	1270	1435	1440	1635	1840	2030
–	905	1035	1145	1275	1290	1480	1660	1840

[1] Cooling and heating speeds are based on a combination of DIP switch settings on the furnace control. Refer to Installation Instructions for specific DIP Switch Settings.

[2] Factory default setting.

NOTES - The effect of static pressure is included in air volumes shown.
First stage HEAT is approximately 91% of the same second stage HEAT.
First stage COOL (two-stage air conditioning units only) is approximately 70% of the same second stage COOL speed position.
Continuous Fan Only speed is selectable at 28% and 38% of the selected second stage cooling speed - minimum 450 cfm.
Lennox® Smart Zoning System Applications - Minimum blower speed is 450 cfm.

EL297UH135XV60D BLOWER MOTOR WATTS (COOLING)

[1] Cooling Speed DIP Switch Settings		Motor Watts @ Various External Static Pressures - in. wg.																			
		First Stage										Second Stage									
		0.1	0.2	0.3	0.4	0.5	0.6	0.7	0.8	0.9	1.0	0.1	0.2	0.3	0.4	0.5	0.6	0.7	0.8	0.9	1.0
+ Setting																					
Cooling Speed	Low	99	123	147	172	198	224	252	280	310	332	249	280	310	343	376	410	445	480	519	547
	Med-low	136	163	190	219	248	278	310	346	382	405	352	386	421	459	495	532	573	613	652	686
	Med-High	178	206	236	268	300	333	366	400	437	465	474	513	551	592	635	679	726	779	830	863
	High	249	280	310	342	376	410	444	480	519	547	664	710	751	799	847	895	946	1008	1047	N/A
Factory Default																					
Cooling Speed	Low	82	105	126	150	174	199	224	250	275	297	190	217	247	278	311	342	375	410	445	473
	Med-low	110	135	160	185	211	239	268	299	331	352	275	305	336	368	401	437	474	510	547	577
	Med-High	138	165	194	223	251	283	315	352	387	411	366	402	439	476	515	556	597	637	677	714
	High	190	217	247	278	311	343	376	410	445	473	484	523	562	603	643	686	732	781	835	867
– Setting																					
Cooling Speed	Low	67	88	108	131	153	175	197	220	244	264	140	168	195	224	254	285	318	354	390	414
	Med-low	88	112	134	158	184	208	236	262	288	310	209	236	267	297	329	361	395	427	464	491
	Med-High	110	135	160	185	211	239	268	299	331	352	283	313	345	376	413	447	484	521	560	589
	High	140	168	195	224	254	285	318	354	390	414	366	402	439	476	515	556	597	637	677	714

BLOWER DATA

EL297UH135XV60D BLOWER PERFORMANCE (less filter)

SINGLE SIDE RETURN AIR − Air volumes in **bold** (over 1800 cfm) require Optional Return Air Base and field fabricated transition to accommodate 20 x 25 x 1 in. air filter in order to maintain proper air velocity.

0 through 0.8 in. w.g. (Heating) and 0 through 1.0 in. w.g. (Cooling) External Static Pressure Range

HEATING		
[1] Heating Speed DIP Switch Settings	First Stage Heating Speed - cfm	Second Stage Heating Speed - cfm
+24%	1725	**2070**
+18%	1635	**1975**
+12%	1555	**1900**
+6%	1470	**1815**
Factory Default	1405	1715
–6%	1325	1610
–12%	1250	1525
–18%	1185	1420

COOLING								
[1] Cooling Speed DIP Switch Settings	First Stage Cooling Speed - cfm				Second Stage Cooling Speed - cfm			
	Low	Medium-Low	Medium-High	[2] High	Low	Medium-Low	Medium-High	[2] High
+	1130	1275	1405	1555	1595	**1805**	**1975**	**2180**
Factory Default	1040	1185	1280	1415	1450	1625	**1840**	**2000**
–	950	1080	1185	1300	1310	1480	1655	**1840**

[1] Cooling and heating speeds are based on a combination of DIP switch settings on the furnace control. Refer to Installation Instructions for specific DIP Switch Settings.
[2] Factory default setting.

NOTES - The effect of static pressure is included in air volumes shown.
First stage HEAT is approximately 91% of the same second stage HEAT.
First stage COOL (two-stage air conditioning units only) is approximately 70% of the same second stage COOL speed position.
Continuous Fan Only speed is selectable at 28% and 38% of the selected second stage cooling speed - minimum 450 cfm.
Lennox® Smart Zoning System Applications - Minimum blower speed is 450 cfm.

EL297UH135XV60D BLOWER MOTOR WATTS (COOLING)

[1] Cooling Speed DIP Switch Settings		Motor Watts @ Various External Static Pressures - in. wg.																			
		First Stage									Second Stage										
		0	0.1	0.2	0.3	0.4	0.5	0.6	0.7	0.8	0	0.1	0.2	0.3	0.4	0.5	0.6	0.7	0.8	0.9	1.0
+ Setting																					
Cooling Speed	Low	87	123	145	178	213	241	270	299	340	244	283	316	356	418	453	491	529	570	598	642
	Med-low	131	161	197	228	266	309	334	361	392	340	377	425	477	528	570	615	661	702	732	789
	Med-High	168	201	248	283	319	357	385	438	468	479	523	587	615	665	717	762	812	860	907	955
	High	239	283	316	356	418	453	491	529	570	661	703	770	822	862	941	994	1037	1098	1136	1177
Factory Default																					
Cooling Speed	Low	67	97	126	150	177	210	239	264	296	162	201	243	273	311	353	384	426	469	505	541
	Med-low	100	130	165	190	225	255	290	320	350	245	281	322	374	433	465	509	546	596	629	666
	Med-High	132	169	198	228	267	306	333	370	401	370	404	458	516	559	600	657	696	746	783	816
	High	163	201	243	273	311	353	384	426	469	502	544	601	639	683	744	791	845	884	927	961
– Setting																					
Cooling Speed	Low	57	84	107	133	157	177	206	236	259	126	158	192	226	265	290	326	360	392	424	459
	Med-low	73	102	132	158	185	221	252	273	302	175	213	252	291	338	366	417	453	487	521	572
	Med-High	100	130	167	193	225	257	290	320	354	254	292	343	377	431	475	521	566	604	642	678
	High	126	158	192	226	265	290	326	360	392	370	404	458	516	559	600	657	696	746	783	816

REVISIONS

Sections	Description of Change
Dimensions	Updated Furnace/Coil Combined Dimension data for new CK40 coils.
Override Accessories	Added Refrigerant Detection System (RDS) Components.

Visit us at www.Lennox.com
For the latest technical information, www.LennoxPros.com
Contact us at 1-800-9-LENNOX

NOTE - Due to Lennox' ongoing commitment to quality, Specifications, Ratings and Dimensions subject to change without notice and without incurring liability.
Improper installation, adjustment, alteration, service or maintenance can cause property damage or personal injury.
Installation and service must be performed by a qualified installer and servicing agency.

©2024 Lennox Industries, Inc.