SL280DFNV

DAVE LENNOX *SIGNATURE*® COLLECTION

Downflow - Two-Stage Heat - Variable Speed Blower - 60 Hz

RESIDENTIAL PRODUCT SPECIFICATIONS

Bulletin No. 210931
March 2025
Supersedes all previous versions

S40 Smart Wi-Fi
Communicating Thermostat
(Not Furnished)

AFUE - 80%
Meets NOx Limit of 14 ng/J
Input - 60,000 to 80,000 Btuh
Nominal Add-on Cooling - 2 to 5 Tons

MODEL NUMBER IDENTIFICATION

SL 2 80 DF 060 N V 36 B

Unit Type
SL = Dave Lennox *Signature*® Collection

Stages
2 = Two-Stage

AFUE
80 = 80%

Configuration
DF = Downflow

Nominal Gas Heat Input
060 = 60,000 Btuh
080 = 80,000 Btuh

Ultra-Low NOx
N = Units meet California Nitrogen Oxides Standard (14ng/J)

Blower
V = Variable Speed Blower Motor

Nominal Add-On Cooling Capacity
36 = 2-3 tons
60 = 3.5-5 tons

[1] Cabinet Width
B = 17-1/2 in.
C = 21 in.

[1] Downflow indoor coils with the same letter designation physically match the furnace **supply air opening**.

FEATURE HIGHLIGHTS

1. Heat Exchanger Assembly
2. Burner Orifice/Air Intake Assembly
3. SureLight® Hot Surface Ignitor
4. Modulating Gas Control Valve
5. Variable-Speed Combustion Air Inducer
6. Thermal Switch
7. Variable Speed Direct Drive Blower
8. SureLight® Integrated Furnace Control
9. Variable Speed Direct Drive Blower
10. Insulated Cabinet
11. Safety Interlock Switch
12. Gas Piping And Electrical Inlets

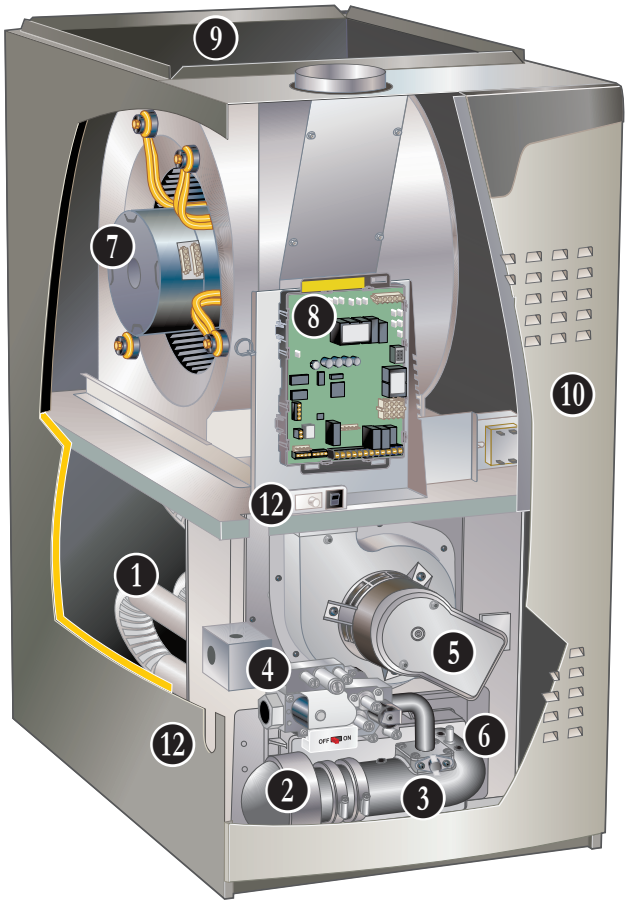

NOTE - SL280DFNV FURNACES ARE NOT AVAILABLE IN CANADA!
NOTE - SL280DFNV FURNACES CANNOT BE TWINNED!
NOTE - NOT AVAILABLE IN ALL AREAS!
CONTACT YOUR NEAREST LENNOX SALES OFFICE FOR DETAILS.

CONTENTS

Blower Data 13
Approvals And Warranty 3
Dimensions 10
- Furnace/Coil Combined Dimensions 12
- Optional Accessories 11
- Unit 10
Features 3
Gas Heat Accessories 9
High Altitude Operation. 9
Model Number Identification. 1
Optional Accessories - Order Separately 9
Specifications 8

APPROVALS AND WARRANTY

APPROVALS

- AHRI Certified
- Tested and rated according to US DOE test procedures and FTC labeling regulations
- Approved by the California Energy Commission and meets California Nitrogen Oxides Standard (NOx) limits of 14 ng/J
- Units are approved for installations from 0 - 4500 ft.
- ISO 9001 Registered Manufacturing Quality System
- Blower data from unit tests conducted in Lennox Laboratory air test chamber

NOTE - This furnace has not been CSA International design certified for installation in mobile homes, recreational vehicles, or outdoors.

California Only

- These furnaces **meet** the South Coast Air Quality Management District (SCAQMD) Rule 1111 and San Joaquin Valley Air Pollution Control District (SJVAPCD) Rule 4905 NOx emission limit (14 ng/J) and can be installed within the SCAQMD, SJVAPCD and Bay area

WARRANTY

- Heat Exchanger:
  - Limited twenty years in residential applications
  - Limited ten years in non-residential applications
- All other covered components:
  - Limited ten years in residential installations
  - Limited one year in non-residential installations

NOTE - Refer to Lennox® Basic Limited Warrenty at www.Lennox.com for additional details.

FEATURES

APPLICATIONS

- Input capacities of 60,000 and 80,000 Btuh
- Energy efficiency (AFUE) - 80%
- Compact cabinet for downflow applications without any internal modifications to the unit
- Lennox add-on indoor coils, high-efficiency air cleaners and humidifiers can easily be added to furnace
- Shipped factory assembled with all controls installed and wired
- Each unit factory test operated to ensure proper operation

ZONING APPLICATIONS

- The SL280NV furnace is designed to work with the Lennox Lennox® Smart Zoning System with the Lennox® Communicating Thermostat
- The Lennox® Smart Zoning System provides direct feedback to the furnace, controlling both airflow and heat output to precisely match the comfort requirements for up to four zones

HEATING SYSTEM

1 Heat Exchanger Assembly

- Heavy gauge aluminized steel heat exchanger
- Tubular design
- Designed for normal expansion and contraction
- Round surfaces create minimum resistance to air flow for excellent heat transfer
- Laboratory life cycle tested in excess of industry standards
- Compact size permits low overall design of furnace cabinet

2 Burner Orifice/Air Intake Assembly

- Burner assembly has a single orifice located between the gas valve and the air intake assembly
- Orifice is precisely matched to the burner input
- Burner can be removed for servicing

3 SureLight® Hot Surface Ignitor

- Tough, reliable, long-life, trouble-free performance
- Silicon nitride ignitor
- 120 volt
- Cemented to steatite block for protection against current leakage
- Ignition leads are constructed of nickel plated copper and are enclosed in high temperature Teflon® insulation for dependable operation

4 Modulating Gas Control Valve

- 24 volt redundant combination modulating gas control valve combines manual shut off switch (On-Off), automatic electric valve (dual) and gas pressure regulation into a compact combination control

5 Variable-Speed Combustion Air Inducer

- Heavy duty variable-speed blower prepurges heat exchanger and safely vents flue products
- Pressure switch (low fire/high fire) proves blower operation before allowing gas valve to open
- Operates only during heating cycle

HEATING SYSTEM (continued)

6 Thermal Switch
- Factory installed on air/fuel intake assembly
- Automatic reset
- Switch provides protection from abnormal operating conditions

Limit Controls
- Primary limit is accurately located on vestibule panel on all units
- Automatic reset

Optional Accessories

High Altitude Pressure Switch Kit
- Required on 60K natural gas units for proper operation at altitudes from 4501 to 7500 ft.

Natural Gas to LPG/Propane Conversion Kit
Required for field changeover from natural gas to LPG/Propane
- Includes gas and air orifices

Combustion Air Intake Muffler Kit
- Significantly reduces outdoor operating sound levels
- Installed vertically or horizontally in the intake piping
- See Optional Accessories Dimension Drawing

BLOWER

7 Variable Speed Direct Drive Blower
- Each blower assembly statically and dynamically balanced
- Blower assembly easily removed for servicing

Variable Speed Blower Motor
- Variable speed motor maintains specified air volume from 0 though 0.8 in. w.g. (heating) and 0 through 1.0 in. w.g. (Cooling) static range
- Variable speed operation is achieved by the use of an ECM (Electronically Commutated Motor) motor
- Motor is controlled by furnace control
- Change in blower speed is easily accomplished by simple DIP switch change on furnace control
- See Blower Data tables
- Motor is resiliently mounted

NOTE - When furnaces are used with the Lennox® Smart Zoning System and the Lennox® Communicating Thermostat, the blower motor operates from predetermined minimum - maximum air volumes to satisfy zone requirements.

CONTROLS

8 SureLight® Integrated Furnace Control (Lennox® Communicating)

- Advanced control communicates information about various operating parameters in the furnace to the optional Lennox® Communicating Thermostat to constantly maintain the highest level of comfort and performance available
- Auto Configuration - On start-up the control automatically sends a description of the unit to the optional Lennox® Communicating Thermostat to automatically configure the number of stages and features available
- Terminals for connecting a conventional heating/cooling thermostat are also provided on the control
- Control also features Innovative AirFlex™ technology which allows custom blower settings based on the application

NOTE - For optimal performance, the use of a high-quality, digital two-stage thermostat with adjustable settings for first stage/second stage, on/off differentials and adjustable stage timers is recommended.

Furnace Input Staging Options

Thermostat Type	Input Staging Available
Lennox® Communicating Thermostat	Two-Stage (65 and 100%)
Two-Stage (Conventional)	
Single-Stage (Conventional)	

- Safety Controls - Flame sensor utilizes flame rectification for safe and reliable operation
- Should flame fail to ignite, control will initiate 4 re-attempts at ignition before locking out unit operation for 60 minutes
- Watchguard type circuit automatically resets ignition control after one hour of continuous thermostat demand after unit lockout, eliminating nuisance calls for service
- Display LED - Seven segment LED displays alpha-numeric information related to diagnostics as well as system operation and status
- Diagnostic codes are held in non-volatile memory, immune from power interruptions
- Holds up to ten diagnostic codes in order of occurrence for recall on demand
- Port on blower door allows for easy viewing

CONTROLS (continued)

DIP Switch Settings

- Select Thermostat Used - Single-Stage or Two-Stage
- Two selectable second stage recognition times (7 and 12 minutes) are available on the control when the furnace is used with a single-stage thermostat
- When used with a two-stage thermostat, furnace will only initiate second stage operation with a second stage thermostat demand
- Heating Speeds - A combination of DIP switch settings allow the following motor speed selection settings within the heating speed selected for fine tuning air volume:
  - Factory default
  - 6%, 12%, 18% or 24% increase
  - 6%, 12% or 18% decrease
- See Blower Performance tables
- Cooling Speeds - A combination of DIP switch settings allow the following motor speed selection settings within the cooling speed selected for fine tuning air volume:
  - Factory default
  - 10% increase
  - 10% decrease
- See Blower Performance tables
- Blower Speed Ramping (Cooling Mode) - DIP switch settings allow one of four blower speed profiles during cooling operation.
  - Profile A (factory setting) - Motor runs at 50% for 30 seconds, then at 82% for 7-1/2 minutes, then at 100% (if needed) until demand is satisfied.
    Once demand is met, motor runs at 50% for 30 seconds, then ramps down to stop
  - Profile B - Motor runs at 82% for 7-1/2 minutes and then at 100% (if needed) until demand is satisfied. Once demand is met, motor ramps down to stop
  - Profile C - Motor runs at 100% until demand is satisfied. Once demand is met, motor runs at 100% for 60 seconds, then ramps down to stop
  - Profile D - Motor runs at 100% until demand is satisfied. Once demand is met, motor ramps down to stop
- Dehumidification (Active or Humiditrol® Option) - A jumper on the control must be clipped to enable active dehumidification and/or operation with a Humiditrol® Whole-Home Dehumidification System
- A humidity controlling thermostat or device is also required
- During a call for cooling, air volume is automatically reduced, forcing humidity removal by the air conditioner or heat pump system (single stage units or two-stage units running at 2nd stage)
- After the humidity has reached the desired set-point the cooling air volume returns to its designed rate
- A dehumidification signal from the thermostat reduces the cooling cfm to 70% of the requested cooling cfm
- Dual-Fuel Operation - A jumper on the control must be clipped to enable operation with a single or two-stage heat pump
- The indoor blower is started without delay when a call for heat is received
- Two-Stage Compressor Operation - A jumper on the control must be clipped to enable operation with a two-stage compressor
- The cooling blower speeds for first and second stage cooling will be dictated by the applicable DIP switch settings
- Lennox System Operations Monitor Connection - Monitors outdoor unit operation (communicating mode)
- Blower On/Off Time (Heating) - Blower on time is fixed at 30 seconds, blower off time is adjustable from 60, 90, 120 and 180 seconds (factory setting - 90 seconds)
- Blower On/Off Time (Cooling) - For air-conditioning applications, blower on time is 2 seconds following thermostat demand for cooling
- See "Blower Speed Ramping (Cooling Mode)" profiles for various blower off details
- Controls evaporator humidity by controlling blower and compressor speed on two-stage outdoor units when used with the Lennox® Communicating Thermostat
- Continuous Blower Speed - Adjustable continuous blower speed is a percentage of the high cooling speed selection
- Four selectable options (via DIP switch settings) of 28%, 38% (default setting), 70% and 100%
- Accessory Terminal - One accessory terminal furnished for additional power supply requirements for 120 volt (less than 1 amp) powered IAQ accessories
- One un-powered pair of contacts are provided for humidifier connections and may be connected to 24V or 120V
- Control is factory installed in the unit control box

24 Volt Transformer (40VA)

- Furnished and factory installed on outside of control box
- Circuit breaker (furnished) is wired in series

Field Wiring Make-Up Box

- Furnished for line voltage wiring
- Factory installed internally on left side of furnace
- Box may be installed internally on right side of furnace

CONTROLS (continued)

Optional Accessories

S40 Smart Wi-Fi Thermostat (part of the Lennox® Residential Communicating Control System)

- Recognizes and connects to all Lennox® Communicating products to automatically configure and control the heating/cooling system (based on user-specified settings) for the highest level of comfort, performance and efficiency

- Recognizes model and serial number information for Lennox® Communicating products to simplify system setup
- Lennox Smart Room Sensors, Lennox Wireless Extenders and Lennox Smart Air Quality Monitor can be added to the system
- Smart home automation compatible with Amazon Alexa®, Google Assistant, Control4® and Building36®
- Sends service alerts and reminders
- Lennox Smart Thermostat App features Wi-Fi remote temperature monitoring and adjustment through a home wireless network apps for smartphones or tablets
- Lennox Smart Technician App allows installer to manage systems in the home
- Service Dashboard features online real-time monitoring and advanced diagnostics of installed Lennox® Communicating systems
- Simple easy-to-use touchscreen allows complete system configuration
- Scheduled maintenance alerts, system warnings and troubleshooting are also displayed on thermostat screen
- Easy to read 7 inch high definition color display (measured diagonally)
- Conventional outdoor units (not Lennox® Communicating) can easily be added and controlled by the S40 Thermostat
- Installer setup screens allow quick and simple system configuration without a manual, Installer can also run tests on complete system or individual components for easy maintenance and troubleshooting
- Serial communications bus (RSBus), with less wiring than a conventional heating/cooling system, allows system communication
- Uses standard 4-wire unshielded thermostat wiring
- High Definition Color Display with Subbase and wallplate furnished for easy installation

NOTE - See the Lennox® S40 Thermostat Product Specifications bulletin in the Controls section for more information.

Remote Outdoor Temperature Sensor

- Allows thermostat to display outdoor temperature
- Automatically detected when connected to thermostat

NOTE - Sensor is required for the Enhanced Dehumidification Accessory (EDA).

NOTE - Sensor is furnished as standard with Lennox® Communicating outdoor units, optional for conventional units.

Thermostat

- Thermostat is not furnished with unit
- Lennox Price Book for selection

Transformer (75VA)

- Recommended when furnace is used with zoning or defrost thermostats and other 24V accessories requiring a higher VA rating
- Circuit breaker (furnished) is wired in series
- Replaces the standard 40VA transformer

FEATURES

CABINET

- Low-profile, narrow width cabinet allows easy installation
- Heavy-gauge, cold rolled steel construction
- Pre-painted cabinet finish
- Flanges provided on supply air opening for ease of plenum connection
- 9 Insulated cabinet with foil faced insulation on sides and back of heating compartment and mat faced insulation in blower compartment
- Sealed blower compartment
- Inner blower compartment access panel seals blower compartment from air leakage
- 10 Cabinet door can be removed without any tools
- Complete service access
- 11 Safety interlock switch automatically shuts off power to unit when inner blower compartment access panel is removed
- 12 Gas piping and electrical inlets are provided in both sides of cabinet.

Coil Match-Up

- All Lennox downflow indoor coils will physically match the furnace supply air opening with the same letter designation (A, B, C, D) as in the furnace model number

Low Leakage Cabinet

- All models have less than 2% air leakage
- Meets ANSI/ASHRAE Standard 193-2010 “Method of Test for Determining the Air Tightness of HVAC Equipment”

Optional Accessories

Downflow Combustible Flooring Base

- Required for heating only units installed on combustible floors
- Not required in add-on cooling applications
- See Dimension Drawing

FILTER (not furnished)

- Filter and provisions for external mounting must be field provided

Optional Accessories

Downflow Filter and Rack Kit

- Filter cabinet mounts directly on top of furnace
- “B” and “C” width cabinets include two filters
- Filter rails are furnished
- Front access for servicing
- Cleanable filter(s) are furnished

REFRIGERATION DETECTION SYSTEM (RDS)

Optional Accessories

Refrigerant Detection System (RDS) Coil Sensor Kit

- Complies with UL 60335-2-40 approved standard
- Required for field installation for all systems using R-454B refrigerant if sensor is not furnished with coil
- Consists of Refrigerant Detection System (RDS) sensor, lineset sleeves, mounting brackets and A2L labeling
- Sensor ensures safe operation for systems equipped with R-454B refrigerant
- Sensor will detect anu R-454B refrigerant

Refrigerant Detection System (RDS) Blower Control Board

Communicating Blower Control Board (Universal)

- Communicating Blower Control Board and Sensor can be used universally with any Lennox® communicating furnace or any non-communicating 24 volt furnace

Non-Communicating Blower Control Board

- Non-Communicating Blower Control Board and Sensor can be used with any non-communicating 24 volt furnace

Standard Features

- Complies with UL 60335-2-40 approved standard
- Required for all systems using R-454B refrigerant
- Connects to the RDS sensor furnished with the RDS Coil Sensor Kit
- Supports up to two RDS Sensors (factory setting)
- Used as an interface between indoor unit and thermostat to control system
- Ensures safe operation for systems equipped with R-454B refrigerant
- If R-454B refrigerant is detected, the refrigerant detection system will stop compressor and/or heating operating and operate the blower to reduce concentrations in the conditioned space
- Once safe levels are reached the HVAC system will resume normal operation
- Multi-color LED for system status and as an aid in troubleshooting
  - Flashing LED codes for system status (Green/Blue) and diagnosing Sensor errors (Red)
- Alarm relay can trigger an external alarm if R-454B refrigerant is detected
- Zone relay opens all zone dampers (if part of a zoning system) if R-454B refrigerant is detected
- Power is disabled to non-communicating thermostats to prevent demand if R-454B refrigerant is detected
- On system start-up blower will run for five minutes and any thermostat demands are disabled
- Dimensions (H x W x D): 7-7/16 x 7-7/16 x 2-1/2 (189 x 189 x 127 mm)

NOTE - See Refrigerant Detection System (RDS) Components Table on page 10.

See the CK40 Indoor Coil Product Specifications bulletins for more information.

Refer to the Installation Instructions for additional information.

SPECIFICATIONS

		Model No.	SL280DF060NV36B	SL280DF080NV60C
Gas Heating Performance		[1] AFUE	80%	80%
	High Fire	Input - Btuh	60,000	80,000
		Output - Btuh	47,000	64,000
		Temperature rise range - °F	35 - 65	25 - 55
		Gas Manifold Pressure (in. w.g.) Natural Gas Only	3.4	3.4
	Low Fire	Input - Btuh	39,000	52,000
		Output - Btuh	32,000	43,000
		Temperature rise range - °F	25 - 55	15 - 45
		Gas Manifold Pressure (in. w.g.) Natural Gas Only	1.5	1.5
High static - in. w.g.		Heating	0.8	0.8
		Cooling	1.0	1.0
Connections in.		Flue connection − in. round	4	4
		Gas pipe size IPS	1/2	1/2
Indoor Blower		Wheel nominal diameter x width - in.	10 x 8	11-1/2 x 10
		Motor output - hp	1/2	1.0
		Tons of add-on cooling	2 - 3	3 - 5
		Air Volume Range - cfm	600 - 1350	890 - 2270
Electrical Data		Voltage	120 volts - 60 hertz - 1 phase	
		Blower motor full load amps	7.7	12.5
		Maximum overcurrent protection	15	15
Shipping Data		lbs. - 1 package	123	145

NOTE - Filters and provisions for mounting are not furnished and must be field provided.

[1] Annual Fuel Utilization Efficiency based on DOE test procedures and according to FTC labeling regulations. Isolated combustion system rating for non-weatherized furnaces.

INSTALLATION CLEARANCES

Vent Type	Type B1	Type C
Sides	0 inches (0 mm)	[1] 0 inches (0 mm)
Rear	0 inches (0 mm)	0 inches (0 mm)
Top	1 inch (25 mm)	1 inch (25 mm)
Front	2-1/4 inches (57 mm)	2-1/4 inches (57 mm)
Front (alcove)	24 inches (610 mm)	24 inches (610 mm)
Front (service)	24 inches (610 mm)	24 inches (610 mm)
Floor	[2] Combustible	[2] Combustible
Flue	1 inch (25 mm)	6 inches (152 mm)

NOTE - Air for combustion must conform to the methods outlined in the National Fuel Gas Code (NFPA 54/ANSI-Z223.1).

NOTE - In the U.S. flue sizing must conform to the methods outlined in the current National Fuel Gas Code (NFPA 54/ANSI-Z223.1) or applicable provisions of local building codes.

1 Left side requires 4 in. clearance if single wall vent is used on 14-1/2 in. A" width cabinets, and 2 in. clearance on 17-1/2 in. B" width cabinets.

2 Clearance for installation on combustible floor if optional Downflow Combustible Flooring Base is installed between furnace and combustible floor. Not required in add-on cooling applications if installed in accordance with local codes or National Fuel Gas Code ANSI-Z223.1.

OPTIONAL ACCESSORIES - ORDER SEPARATELY

	"B" Width Models	"C" Width Models
CABINET ACCESSORIES		
Downflow Combustible Flooring Base	**11M60**	**11M61**
CONTROLS		
S40 Smart Wi-Fi Thermostat	**22V24**	**22V24**
[1] Remote Outdoor Temperature Sensor	**X2658**	**X2658**
[2] Discharge Air Temperature Sensor	**88K38**	**88K38**
Transformer (75VA)	**27J32**	**27J32**
DOWNFLOW FILTER KITS		
Downflow Air Filter and Rack Kit	**51W07**	**51W08**
No. and Size of filter - in.	(2) 16 x 20 x 1	(2) 16 x 20 x 1
INTAKE		
Combustion Air Intake Muffler Kit	**29K98**	**29K98**

[1] Remote Outdoor Temperature Sensor is used with conventional (non-Lennox® Communicating) outdoor units (sensor is furnished with Lennox® Communicating outdoor units). Allows the thermostat to display outdoor temperature. Required in dual-fuel and EDA applications.

[2] Optional for service diagnostics.

REFRIGERANT DETECTION SYSTEM (RDS) COMPONENTS

Description		Order No.
Refrigerant Detection System (RDS) Coil Sensor Kit		**26Z69**
Refrigerant Detection System (RDS) Blower Control Board	Any Lennox® Communicating Furnace or any Non-Communicating 24V Furnace (Universal)	**27A03**
	Any Non-Communicating 24V Furnace	**27A02**

NOTE - Communicating Blower Control Board and Sensor can be used universally with Lennox® communicating furnace or any non-communicating 24 volt furnace. Non-Communicating Blower Control Board and Sensor can be used with any non-communicating 24 volt furnace.

HIGH ALTITUDE OPERATION

Units may be installed at altitudes up to 7500 ft. above sea level without any modification.
60K natural gas units installed at altitudes of 4501 to 7500 feet require a field installed High Altitude Pressure Switch. See table below.

GAS HEAT ACCESSORIES

Input	High Altitude Pressure Switch Kit (4501 - 7500 ft.)		Natural Gas to LPG/Propane Kit	
	Natural Gas	LPG/Propane	0 - 4500 ft.	0 - 7500 ft.
060	20K91	No Change	- - -	20P40
080	No Change	N/A	20P41	- - -

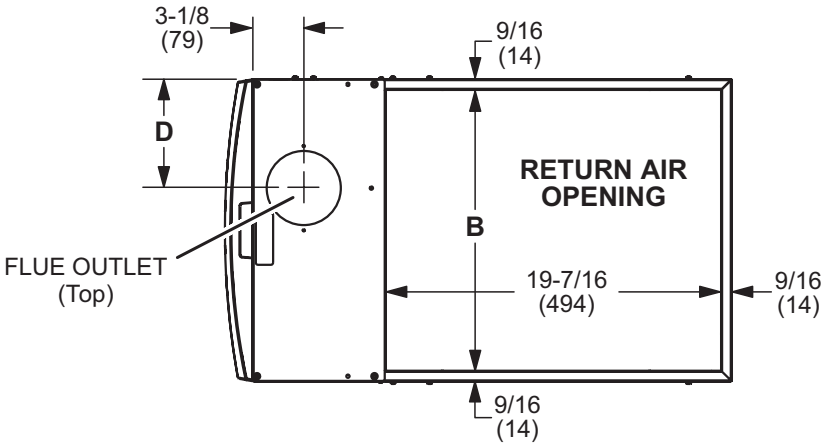

TOP VIEW

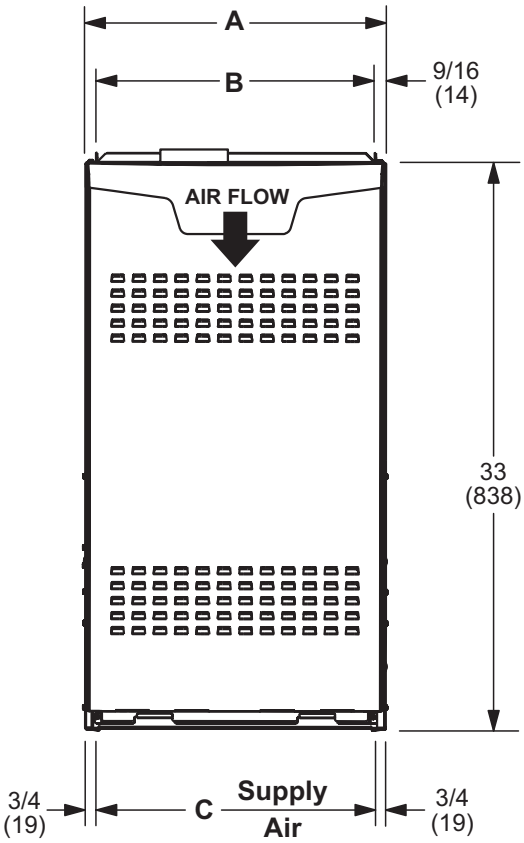

FRONT VIEW

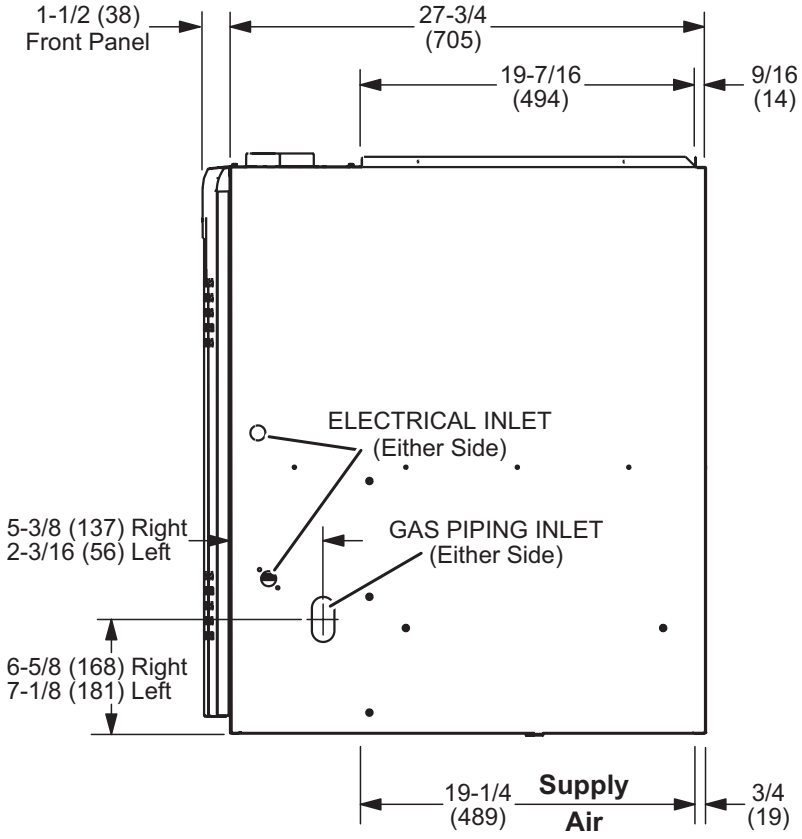

SIDE VIEW

Model No.	A		B		C		D	
	in.	mm	in.	mm	in.	mm	in.	mm
SL280DF060NV36B	17-1/2	446	16-3/8	416	16	406	6-1/4	159
SL280DF080NV60C	21	533	19-7/8	504	19-1/2	495	8	203

DOWNFLOW FILTER CABINET

"B AND "C" WIDTH FURNACES
(Two Filters)

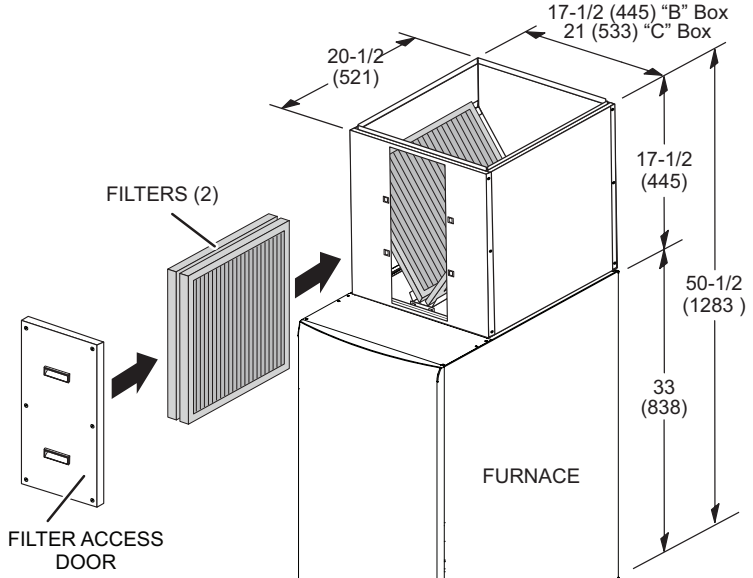

NOTE: Return Air Opening (W x D)
"B" Box 16-1/2 x 19-5/8 (419 x 498)
"C" Box 20 x 19-5/8 (508 x 498)

COMBUSTION AIR INTAKE MUFFLER KIT
29K98 - 2-inch

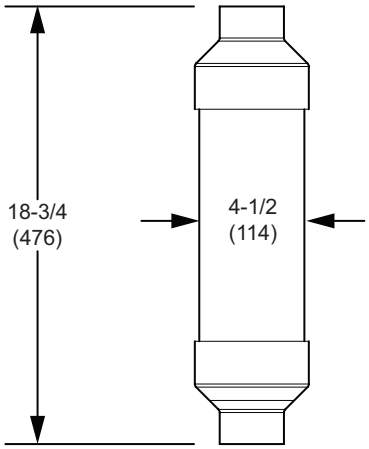

(Muffler can be installed in horizontal or vertical position on the intake pipe.)

DOWNFLOW COMBUSTIBLE FLOORING BASE

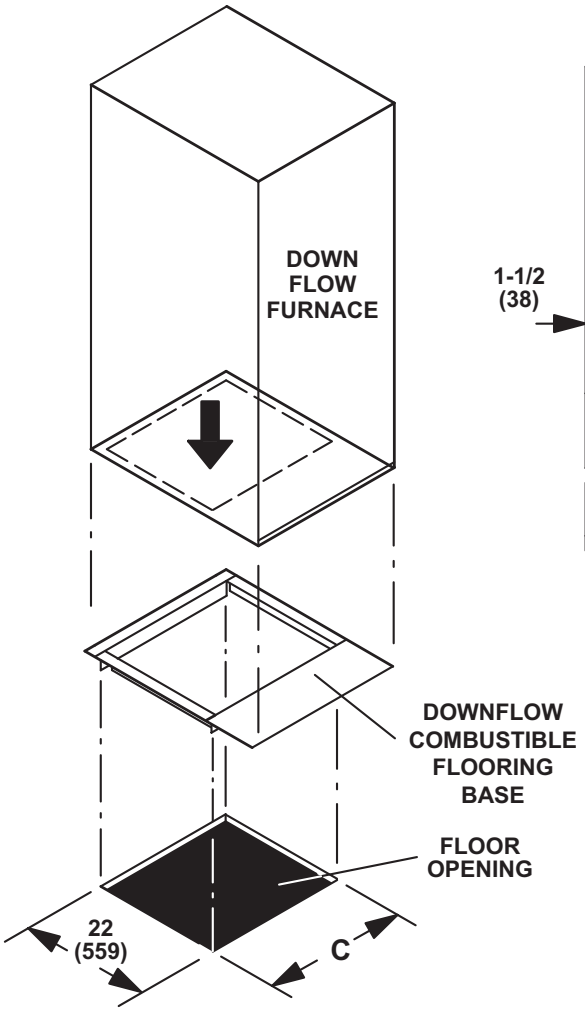

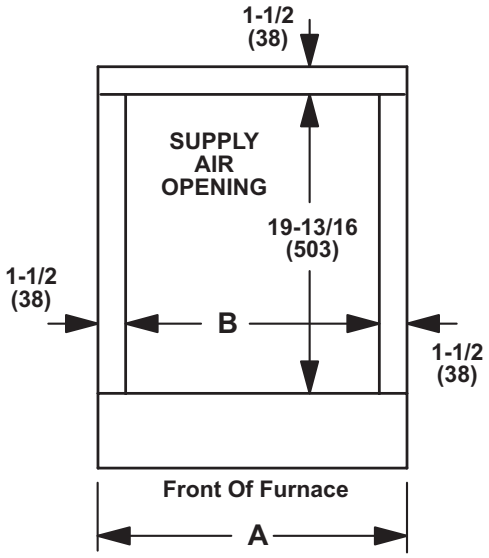

TOP VIEW

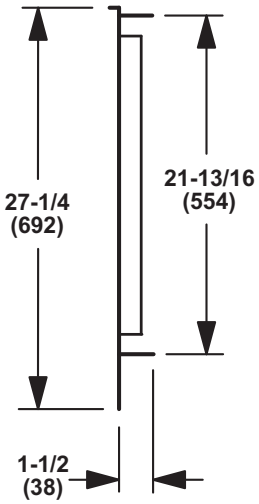

SIDE VIEW

Cabinet Width	Catalog Number	A		B		C	
		in.	mm	in.	mm	in.	mm
B	**11M60**	19-9/16	497	16-9/16	421	18-3/4	476
C	**11M61**	23-1/16	586	20-1/16	510	22-1/4	565

DIMENSIONS FURNACE/COIL COMBINED DIMENSIONS

Model		Coil/Furnace Width		Coil Height		Overall Height	
CK40DT	**CRX35**	in.	mm	in.	mm	in.	mm
CK40DT-24B	CRX35-24B	17-1/2	445	18	457	51	1295
CK40DT-30/36B	CRX35-30/36B	17-1/2	445	23-1/2	597	56-1/2	1435
CK40DT-30/36C	CRX35-30/36C	21	533	23-1/2	597	56-1/2	1435
CK40DT-42B	CRX35-42B	17-1/2	445	23-1/2	597	56-1/2	1435
CK40DT-48C	CRX35-48C	21	533	27-1/2	699	60-1/2	1537
CK40CT-50/60C	CRX35-50/60C	21	533	27-1/2	699	60-1/2	1537

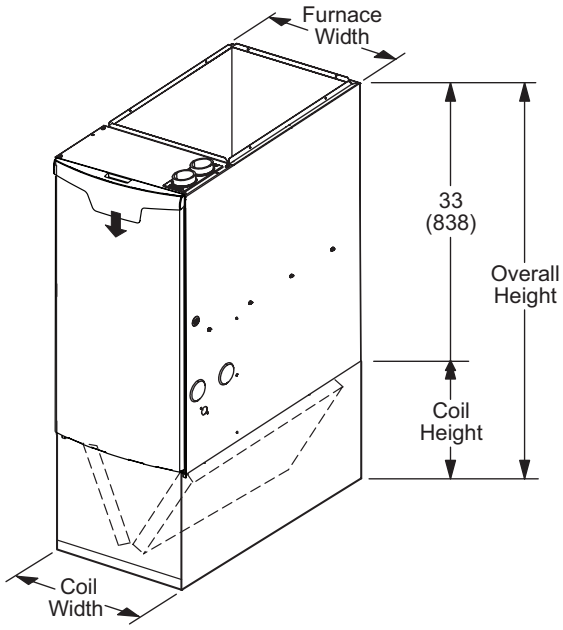

BLOWER DATA

SL280DF060NV36B BLOWER PERFORMANCE (less filter)

0 through 0.8 in. w.g. (Heating) and 0 through 1.0 in. w.g. (Cooling) External Static Pressure Range

HEATING		
[1] Heating Speed DIP Switch Settings	First Stage Heating Speed - cfm	Second Stage Heating Speed - cfm
+24%	1065	1175
+18%	1010	1105
+12%	965	1055
+6%	910	990
Factory Default	855	930
–6%	795	880
–12%	745	820
–18%	695	760

COOLING								
[1] Cooling Speed DIP Switch Settings	First Stage Cooling Speed - cfm				Second Stage Cooling Speed - cfm			
	Low	Medium-Low	Medium-High	[2] High	Low	Medium-Low	Medium-High	[2] High
+	730	780	840	960	1000	1090	1215	1350
Factory Default	665	705	760	870	910	990	1095	1220
–	600	635	685	765	810	885	985	1095

1 Cooling and heating speeds are based on a combination of DIP switch settings on the furnace control. Refer to Installation Instructions for specific DIP Switch Settings.

2 Factory default setting.

NOTES - The effect of static pressure is included in air volumes shown.
First stage HEAT is approximately 91% of the same second stage HEAT.
First stage COOL (two-stage air conditioning units only) is approximately 70% of the same second stage COOL speed position.
Continuous Fan Only speed is selectable at 28% and 38% of the selected second stage cooling speed - minimum 380 cfm.
Lennox® Smart Zoning System Applications - Minimum blower speed is 380 cfm.

SL280DF060NV36B BLOWER MOTOR WATTS (COOLING)

[1] Cooling Speed DIP Switch Settings		Motor Watts @ Various External Static Pressures - in. wg.																			
		First Stage									Second Stage										
		0	0.1	0.2	0.3	0.4	0.5	0.6	0.7	0.8	0	0.1	0.2	0.3	0.4	0.5	0.6	0.7	0.8	0.9	1.0
+ Setting																					
Cooling Speed	Low	51	65	86	106	125	148	160	179	196	89	116	143	177	193	224	251	269	297	321	350
	Med-Low	58	71	98	115	133	157	177	190	215	112	146	174	200	232	261	288	317	338	372	394
	Med-High	74	87	115	130	156	178	203	215	239	152	191	228	265	295	324	355	386	416	445	477
	High	79	102	136	156	182	207	228	252	279	209	246	293	335	362	399	441	476	508	531	547
Factory Default																					
Cooling Speed	Low	45	56	73	92	109	128	145	158	175	71	95	118	143	166	188	212	233	256	277	303
	Med-Low	46	57	77	99	119	134	151	168	188	88	113	139	170	194	216	245	268	290	311	336
	Med-High	58	70	90	111	134	152	169	191	213	133	146	176	205	230	260	289	320	345	370	406
	High	66	87	106	129	147	174	198	216	239	154	191	228	263	294	332	360	391	413	447	475
– Setting																					
Cooling Speed	Low	36	47	65	81	98	113	134	146	162	58	76	99	118	144	165	184	202	223	246	267
	Med-Low	39	52	69	88	106	124	137	152	171	69	91	110	138	155	183	203	224	246	267	291
	Med-High	41	55	75	96	111	131	147	168	187	86	111	139	167	189	216	240	265	289	313	341
	High	51	64	89	106	130	153	169	185	211	111	150	189	217	244	270	295	327	348	374	405

BLOWER DATA

SL280DF080NV60C BLOWER PERFORMANCE (less filter)

0 through 0.8 in. w.g. (Heating) and 0 through 1.0 in. w.g. (Cooling) External Static Pressure Range

HEATING		
[1] Heating Speed DIP Switch Settings	First Stage Heating Speed - cfm	Second Stage Heating Speed - cfm
+24%	1475	1610
+18%	1385	1515
+12%	1335	1445
+6%	1255	1360
Factory Default	1175	1285
–6%	1100	1195
–12%	1050	1140
–18%	980	1045

COOLING								
[1] Cooling Speed DIP Switch Settings	First Stage Cooling Speed - cfm				Second Stage Cooling Speed - cfm			
	Low	Medium-Low	Medium-High	[2] High	Low	Medium-Low	Medium-High	[2] High
+	1090	1220	1380	1575	1575	1800	2000	2270
Factory Default	990	1110	1250	1440	1400	1600	1820	2050
–	890	995	1135	1300	1270	1435	1635	1855

1 Cooling and heating speeds are based on a combination of DIP switch settings on the furnace control. Refer to Installation Instructions for specific DIP Switch Settings.

2 Factory default setting.

NOTES - The effect of static pressure is included in air volumes shown.
First stage HEAT is approximately 91% of the same second stage HEAT.
First stage COOL (two-stage air conditioning units only) is approximately 70% of the same second stage COOL speed position.
Continuous Fan Only speed is selectable at 28% and 38% of the selected second stage cooling speed - minimum 450 cfm.
Lennox® Smart Zoning System Applications - Minimum blower speed is 450 cfm.

SL280DF080NV60C BLOWER MOTOR WATTS (COOLING)

[1] Cooling Speed DIP Switch Settings		Motor Watts @ Various External Static Pressures - in. wg.																			
		First Stage									Second Stage										
		0	0.1	0.2	0.3	0.4	0.5	0.6	0.7	0.8	0	0.1	0.2	0.3	0.4	0.5	0.6	0.7	0.8	0.9	1.0
+ Setting																					
Cooling Speed	Low	96	117	148	175	200	228	252	276	297	270	296	336	368	404	444	478	515	545	577	611
	Med-Low	121	155	184	212	243	273	302	330	354	373	408	441	484	522	554	601	641	689	731	774
	Med-High	183	215	255	283	319	354	380	411	439	529	578	629	682	718	763	824	859	903	951	989
	High	256	285	335	358	401	436	473	512	545	843	877	935	979	1036	1052	1058	1057	1047	1042	1035
Factory Default																					
Cooling Speed	Low	77	98	121	150	173	198	221	238	262	190	221	247	293	317	362	388	417	448	483	504
	Med-Low	104	126	150	179	207	233	262	286	309	291	317	350	393	432	471	503	538	572	610	642
	Med-High	139	167	199	231	259	286	319	344	368	399	423	464	520	547	593	646	686	722	760	813
	High	191	225	255	292	322	359	392	428	456	601	639	683	733	789	837	887	932	977	1018	1034
– Setting																					
Cooling Speed	Low	65	86	110	135	157	177	197	217	238	137	164	198	228	260	288	320	349	372	399	429
	Med-Low	74	95	123	148	173	202	222	241	264	206	239	269	302	343	376	411	437	472	501	534
	Med-High	108	137	166	196	217	248	271	296	320	281	309	342	385	426	463	501	538	573	603	644
	High	139	166	201	229	264	292	323	347	384	417	458	501	545	586	632	687	729	762	814	851

REVISIONS

Sections	Description of Change
Options/Accessories	Added new Combustion Air Intake Muffler

Visit us at www.Lennox.com
For the latest technical information, www.LennoxPros.com
Contact us at 1-800-4-LENNOX

NOTE - Due to Lennox' ongoing commitment to quality, Specifications, Ratings and Dimensions subject to change without notice and without incurring liability.
Improper installation, adjustment, alteration, service or maintenance can cause property damage or personal injury.
Installation and service must be performed by a qualified installer and servicing agency.

©2025 Lennox Industries, Inc.