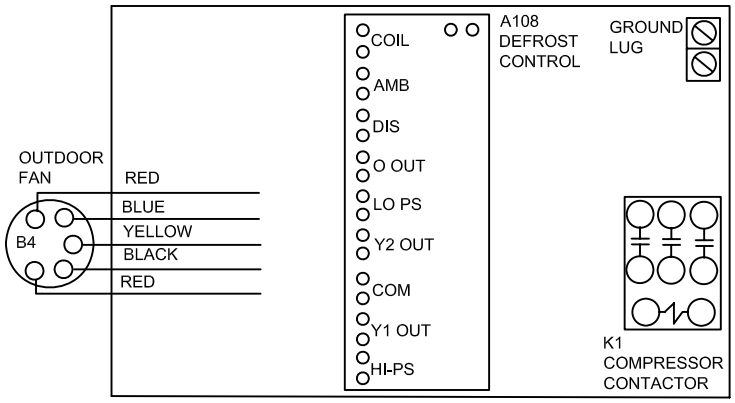

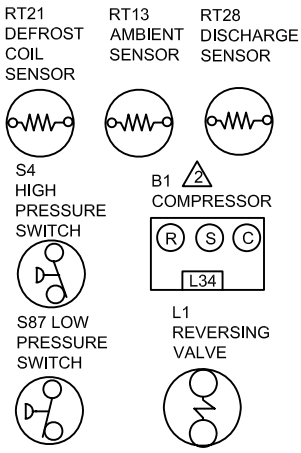

1. NOTE- FOR USE WITH COPPER CONDUCTORS ONLY. REFER TO UNIT RATING PLATE FOR MINIMUM CIRCUIT AMPACITY AND MAXIMUM OVERCURRENT PROTECTION SIZE
2. REFER TO COMPRESSOR IN UNIT FOR ACTUAL TERMINAL ARRANGEMENT
3. WARNING- ELECTRIC SHOCK HAZARD,CAN CAUSE INJURY OR DEATH.UNIT MUST BE GROUNDED IN ACCORDANCE WITH NATIONAL AND LOCAL CODES.
4. CUT ON-BOARD LINK FROM Y1 TO Y2 FOR 2 STAGE COMPRESSOR, AND TWO SPEED FAN
5. S11 AND K58 ARE OPTIONAL LOW AMBIENT CONTROLS
6. L34 SOLENOID IS LOCATED IN COMPRESSOR, COIL IS 24VDC, DO NOT CONNECT 24VAC TO COIL TERMINALS.
7. CUT ON-BOARD LINK FROM R TO O FOR HEAT PUMP APPLICATIONS
8. CUT ON-BOARD LINK FROM R TO DS FOR DEHUMIDIFICATION

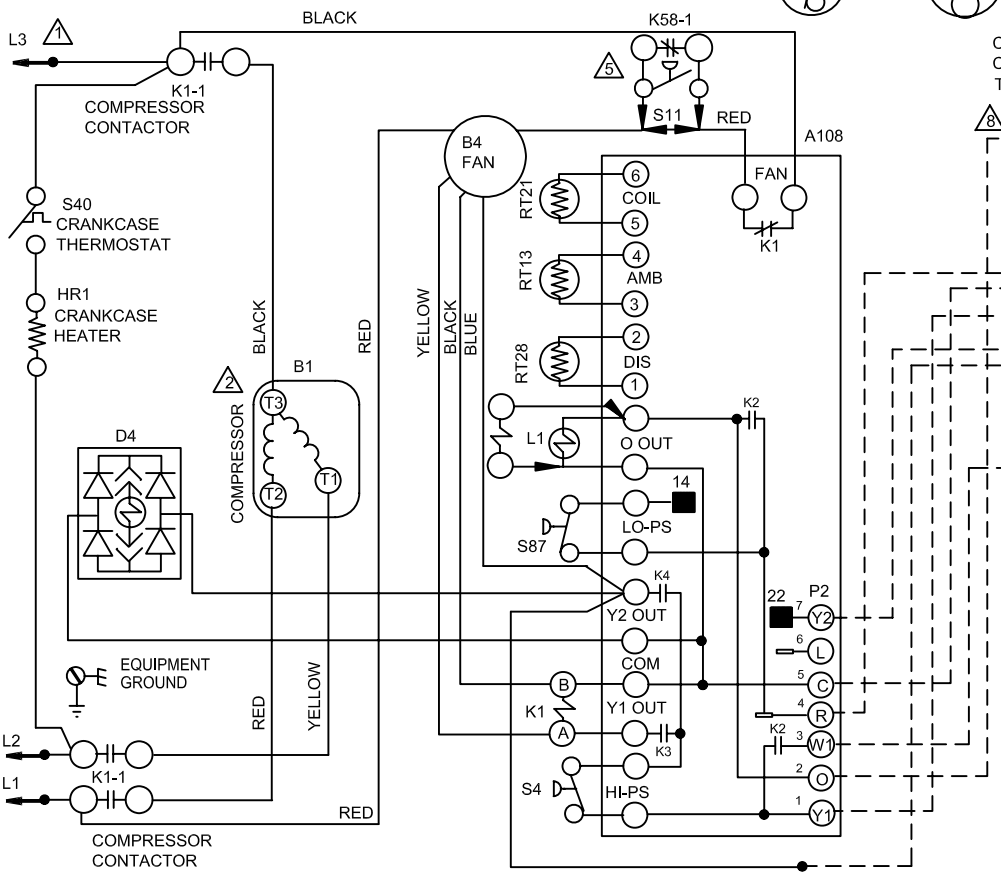

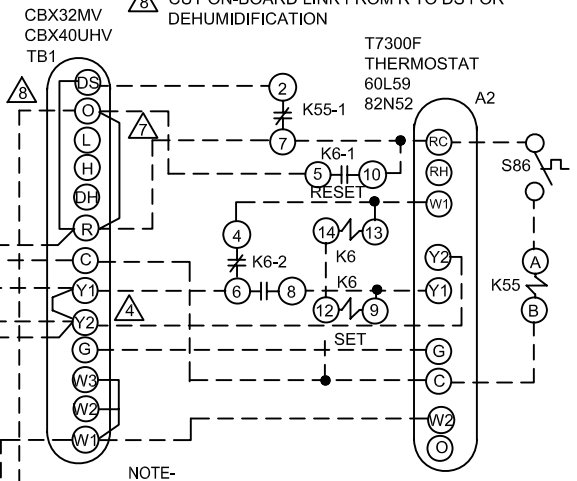

NOTE-
IF ANY WIRE IN THIS APPLIANCE IS REPLACED,IT MUST BE REPLACED WITH WIRE OF LIKE SIZE, RATING, INSULATION THICKNESS, AND TERMINATION.

LINE VOLTAGE FIELD INSTALLED
CLASS II VOLTAGE FIELD WIRING
DENOTES OPTIONAL COMPONENTS

LENNOX	HEAT PUMP OUTDOOR UNITS	
	SPB060-Y	
	0909	Supersedes
		New Form No. 537280-01

© 2009

Litho U.S.A.