CUT SIZE: 7-7/8" WIDE X 8-9/16" HEIGHT

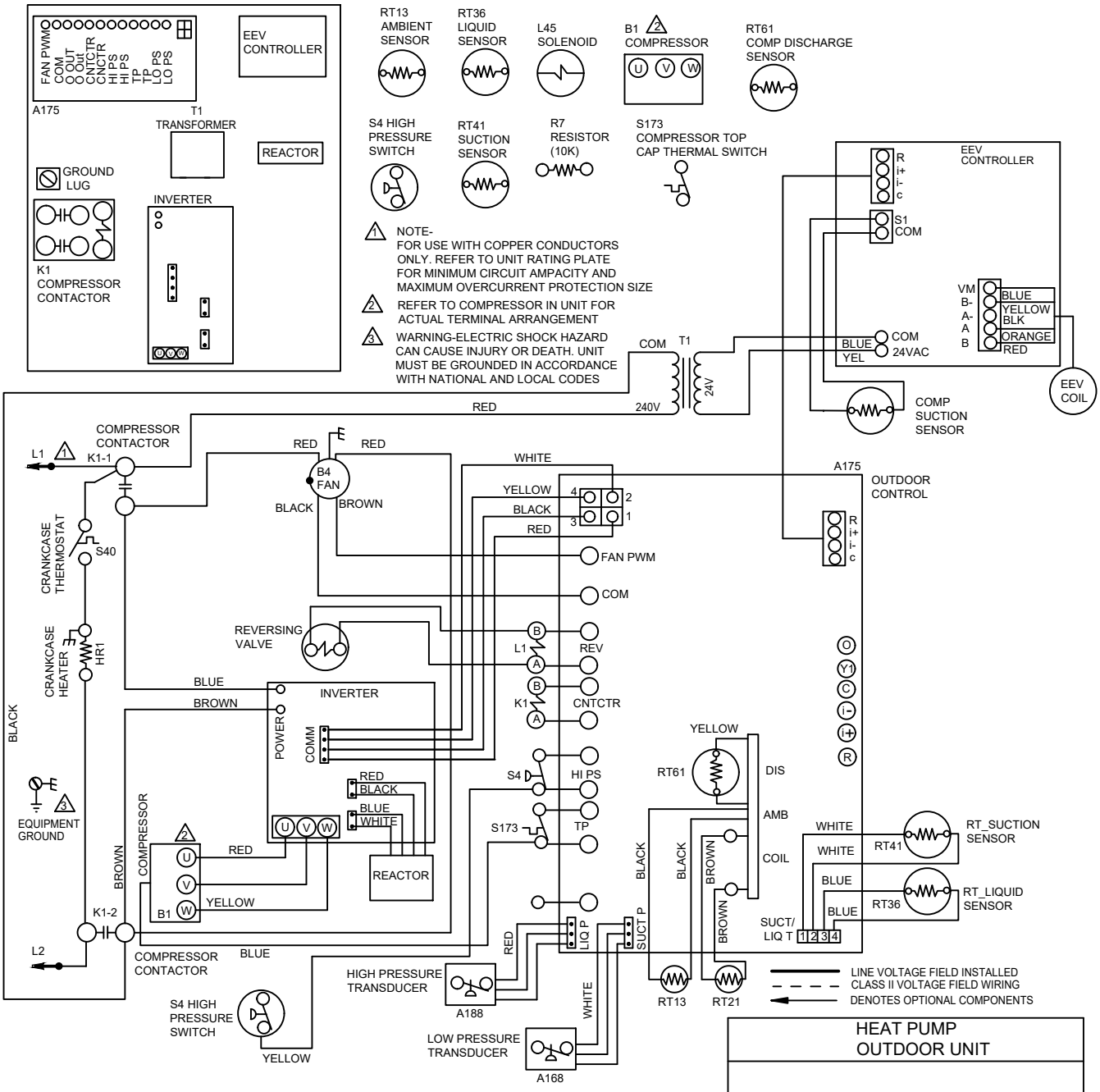

NOTE
-IF ANY WIRE IN THIS APPLIANCE IS REPLACED,IT MUST BE REPLACED WITH WIRE OF LIKE SIZE, RATING, INSULATION THICKNESS, AND TERMINATION.