PACKAGED GAS / ELECTRIC

LRP16GE / LRP16GX

Two-Stage Compressor - Variable Speed - Single-Phase - 60Hz

RESIDENTIAL PRODUCT SPECIFICATIONS

Bulletin No. 210773
March 2024
Supersedes all previous versions

SEER2 - 15.2 / SEER - up to 16.0
AFUE - 81%
2 to 5 Tons
Cooling Capacity - 23,800 to 57,000 Btuh
Input Gas Heating Capacity - 72,000 to 126,000 Btuh

MODEL NUMBER IDENTIFICATION

L RP 16 GE 36 - 090 V P - 3 - A

Brand
L = Lennox

Product Type
RP = Residential Packaged Unit

Nominal Efficiency

Unit Type
GE = Gas/Electric Unit
GX = Low NOx Gas/Electric Unit

Nominal Cooling Capacity
24 = 2 tons
36 = 3 tons
48 = 4 tons
60 = 5 tons

Nominal Heating Capacity Input
072 = 72,000 Btuh
090 = 90,000 Btuh
108 = 108,000 Btuh
126 = 126,000 Btuh

Blower
V = Variable Speed Blower Motor

Voltage
P = 208/230V-1phase-60Hz

Major Revision Sequence
3 = 3rd Generation

Minor Revision Sequence
A = 1st Generation

CONTENTS

Approvals And Warranty 2
Blower Data 14
Cooling Ratings - 2017 10
Cooling Ratings - 2023 12
Dimensions 16
- Accessories 17
- Unit 16
Electrical Data 7
Features 3
Installation Clearances 9
Minimum Clearance To Combustible Material 9
Optional Accessories - Order Separately 8
Specifications 7
Specifications - Gas Heat 9

APPROVALS AND WARRANTY

APPROVALS

- AHRI Standard 210/240 Certified
- Design Certified by ETL Intertek
- Cooling system rated according to DOE test procedures
- Heating ratings are Certified by AHRI according to U.S. Department of Energy (DOE) test procedures and Federal Trade Commission (FTC) labeling regulations
- Units are ETL Certified for the U.S. and Canada
- All models with the Optional Seismic Strapping Kit installed have Seismic Certification for 2018 International Building Code (IBC) and 2019 California Building Code (CBC) ASCE 7
- Unit and components are UL bonded for grounding to meet safety standards for servicing
- Test operated at the factory before shipment ensuring dependable operation at start-up

California Only

- These units **do not meet** the South Coast Air Quality Management District (SCAQMD) Rule 1111 and San Joaquin Valley Air Pollution Control District (SJVAPCD) Rule 4905 NOx emission limit (14 ng/J) and cannot be installed within the SCAQMD, SJVAPCD and Bay Area
- These units are approved by the California Energy Commission and meets California Nitrogen Oxides Standard (NOx) limits of 40 ng/J

WARRANTY

- Heat Exchanger:
  - Limited twenty years in residential applications
  - Limited ten years in non-residential applications
- Compressor:
  - Limited ten years in residential installations
  - Limited five years in non-residential installations
- All other covered components:
  - Limited five years in residential installations
  - Limited one year in non-residential installations

NOTE - Refer to Lennox® Basic Limited Warranty at www.Lennox.com for additional details.

FEATURES

APPLICATIONS

- Designed for outdoor installations at ground level or rooftop for residential applications

Zoning Applications
- Units are not approved for zoning applications

HEATING SYSTEM

Heat Exchanger
- Aluminized tubular steel for superior resistance to corrosion and oxidation
- Round surfaces create minimum air resistance and allow air to surround all surfaces for excellent heat transfer
- Compact design reduces space requirements in cabinet
- Laboratory life cycle tested

Inshot Burners
- Aluminized steel inshot burners provide efficient trouble free operation
- Burner venturi mixes air and gas in correct proportion for proper combustion
- Burner assembly is removable from the unit as a single component for ease of service
- Each burner may be removed individually

Two-Stage Gas Control Valve
- 24 volt redundant combination two-stage gas control valve combines manual shut off valve (On-Off), automatic electric valve (dual) and gas pressure regulation into a compact combination control

Two-Stage Combustion Air Inducer
- Heavy duty combustion air inducer prepurges heat exchanger and safely vents flue products
- Blower is controlled by the ignition control board
- Pressure switch proves blower operation before allowing gas valve to open
- Combustion air inducer operates during heating cycle
- Inducer operates for the first 10 seconds of every cooling cycle to prevent insects from nesting in the flue outlet during cooling season

Limit Control
- Factory installed on heating vestibule panel
- Automatic reset

Flame Rollout Switch
- Factory installed on burner box
- Provides protection from abnormal operating conditions
- Manual reset

Ignition Control Board
- Ignition control board with LED diagnostics

Optional Accessories

LPG/Propane Conversion Kit
- Required for field changeover from natural gas to LPG/ Propane

REFRIGERATION SYSTEM

R-410A Refrigerant
- Non-chlorine, ozone friendly
- Unit is factory pre-charged

Evaporator and Condenser Coils
- Copper tube with aluminum fin coils

Anti-Microbial Evaporator Coil Drain Pan
- Anti-Microbial additive resists growth of mold and mildew on drain pan which improves indoor air quality and reduces drain line blockage
- Drain pan overflow switch monitors condensate level in drain pan and shuts down unit if drain becomes clogged
- Fully insulated to reduce condensation

Condenser Fan
- Weather protected heavy duty condenser fan motor
- Coated steel fan blades for long life
- Corrosion-resistant coated steel fan guard
- Internally mounted
- Totally enclosed fan motor

High Pressure Switch
- Protects the system from high pressure conditions
- Automatic reset.

Loss of Charge Switch
- Shuts off unit if suction pressure falls below setting
- Loss of charge and freeze-up protection

COMPRESSOR

Two-Stage Scroll Compressor
- High volumetric efficiency
- Uniform suction flow
- Constant discharge flow
- Quiet operation

Compressor Operation
- Two involute spiral scrolls matched together generate a series of crescent shaped gas pockets between them
- During compression, one scroll remains stationary while the other scroll orbits around it
- Gas is drawn into the outer pocket, the pocket is sealed as the scroll rotates
- As the spiral movement continues, gas pockets are pushed to the center of the scrolls
- Volume between the pockets is simultaneously reduced
- When the pocket reaches the center, gas is now at high pressure and is forced out of a port located in the center of the fixed scrolls
- During compression, several pockets are compressed simultaneously resulting in a smooth continuous compression cycle
- Continuous flank contact, maintained by centrifugal force, minimizes gas leakage and maximizes efficiency
- Compressor is tolerant to the effects of slugging and contaminants

COMPRESSOR (continued)

- If this occurs, scrolls separate, allowing liquid or contaminants to be worked toward the center and discharged
- During the compression process, there are several pockets in the scroll that are compressing gas
- Modulation is achieved by venting a portion of the gas in the first suction pocket back to the low side of the compressor thereby reducing the effective displacement of the compressor
- A 24-volt DC solenoid valve inside the compressor controls staging
- When the 3-way solenoid is energized it moves the lift ring assembly to block the ports and the compressor operates at full-load or 100% capacity
- When the solenoid is de-energized the lift ring assembly moves to unblock the compressor ports and the compressor operates at part-load or approximately 67% of its full-load capacity
- The "loading" and "unloading" of the two stage scroll is done "on the fly" without shutting off the single-speed compressor motor between stages
- Low gas pulses during compression reduces operational sound levels
- Compressor motor is internally protected from excessive current and temperature
- Compressor is installed in the unit on specially formulated, resilient rubber mounts for better sound dampening and vibration free operation

Optional Accessories

Compressor Crankcase Heater

- Protects against refrigerant migration that can occur during low ambient operation

Compressor Hard Start Kit

- A PSC compressor motor does not normally need a potential relay and start capacitor
- In cases of low voltage, this kit may be required to increase the compressor starting torque

Compressor Timed-Off Control

- Prevents compressor short-cycling
- Allows time for suction and discharge pressure to equalize
- Permits compressor start-up in an unloaded condition
- Automatic reset
- Five minute delay between compressor shut-off and start-up

Low Ambient Kit (40°F)

- Cycles the outdoor fan while allowing compressor operation in the cooling cycle
- This intermittent fan operation allows the system to operate without icing the evaporator coil and losing capacity
- Designed for use in ambient temperatures no lower than 40°F

NOTE - A crankcase heater must be installed on the compressor.

SUPPLY AIR BLOWER

- Direct Drive Blower
- Blower wheel statically and dynamically balanced
- Multi-speed operation is achieved by the use of an ECM (Electronically Commutated Motor) variable speed motor
- Blower assembly easily removed for servicing

ECM Variable Speed Blower Motor

- Variable speed motor maintains specified air volume from 0 though 0.80 in. w.g. static range
- Motor is controlled by the blower control
- Change in blower speed is easily accomplished by simple jumper pin change on blower control
- Motor is resiliently mounted

INDOOR AIR QUALITY (option)

Healthy Climate® PCO Accessory

- The Healthy Climate® PCO Accessory uses photo-catalytic oxidation (PCO) technology to significantly reduce levels of airborne volatile organic compounds, cooking odors and common household odors
- Lennox' Healthy Climate® PCO Accessory is mounted internally to the unit cabinet for superior indoor air quality
- Kit contains PCO cartridge, UVA lamp, UVA lamp holder assembly, ballast box, wiring harness and all necessary hardware

NOTE - The Healthy Climate® PCO Accessory cannot be used with the Internal Filter Rack Kit. High efficiency filtration external to the return air inlet and the PCO accessory in the unit is required and must be field supplied.

Internal Filter Rack Kits

- Available for 1 in. thick filters. Kit contains filter rails for mounting filters internal to unit
- Filters are not furnished and must be field provided

NOTE - The Internal Filter Rack Kit cannot be used with the Healthy Climate® PCO Accessory.

NOTE - Maximum acceptable filter efficiency is MERV 11.

FEATURES

CONTROLS

Electronic Blower Control

- Two Stages - HEAT and COOL (with four different air volume selections for each) are made by simple jumper pins
- ADJUST jumper pin allows approximately 10% higher, normal or 10% lower motor speed selection within (COOL) speeds selected for fine tuning air volume
- See Blower Data tables

NOTE - HEAT speeds are not affected by jumper change.

- Cooling Airflow Ramp Up - At the beginning of a call for cooling, the blower will run at 82% of full airflow for 7.5 minutes
- This improves the system's moisture removal and saves blower power during cooling start
- Reduced Airflow Operation - For situations where humidity control is an issue, the variable speed motor can be connected to operate at a 25% reduction of the normal airflow rate
- The variable speed motor interface provides for connection of a thermostat with humidity control or a humidistat on the HUM terminal

NOTE - When connected, the dehumidifier resistor on the interface must be cut.

- The control should be wired to open during high humidity, which will reduce blower airflow

24 Volt Transformer

- 40VA transformer furnished and factory installed in control area

Optional Accessories

M30 Smart Wi-Fi Thermostat

- Wi-Fi-enabled, electronic 7-day, universal, multi-stage, programmable, touchscreen thermostat
- 4 Heat/2 Cool
- Auto-changeover
- Dual-fuel control with optional outdoor sensor
- Controls dehumidification during cooling mode and humidification during heating mode

- Offers enhanced capabilities including humidification / dehumidification / dewpoint measurement and control, Humiditrol® control, and equipment maintenance reminders
- Easy to read 4.3 in. color touchscreen (measured diagonally)
- LCD display with backlight shows the current and set temperature, time, inside relative humidity, system status (operating mode and schedules) and outside temperature (optional outdoor sensor required)
- Smooth Setback Recovery starts system early to achieve setpoint at start of program period
- Compressor short-cycle protection (5 minutes)
- Up to four separate schedules are available plus Schedule IQ™
- One-Touch Away Mode - A quick and easy way to set the cooling and heating setpoints while away
- Smart Away™ - Uses geo-fencing technology to determine when the homeowner is within a predetermined distance from the home to operate the system when leaving, away and arriving
- Wi-Fi remote monitoring and adjustment through a home wireless network for desktop PCs, laptops and apps for smartphones or tablets
- Smart home automation compatible with Amazon Alexa®, Google Assistant and IFTTT
- Service Dashboard features online real-time monitoring of installed Lennox® thermostats

NOTE - See the Lennox® M30 Smart Wi-Fi Thermostat Product Specifications bulletin in the Controls section for more information.

Remote Outdoor Temperature Sensor

- Used with the Lennox® M30 Smart Wi-Fi Thermostat
- Outdoor sensor allows thermostat to display outdoor temperature

NOTE - Remote Outdoor Temperature Sensor is recommended for heat pump balance point control to lock out some of the electric heating elements where two-stage control is applicable.

Thermostat

- Thermostat is not furnished with unit
- Lennox Price Book for selection

FEATURES

CABINET

- Conditioned areas insulated with foil faced insulation
- Minimizes heat loss and reduce operating sound levels
- Powder paint for maximum durability
- Easy service access
- Steel louvered panels provides complete coil protection
- Full perimeter heavy-gauge galvanized steel base rail
- Base rails have rigging holes
- Two sides of the base rail have forklift slots
- Raised edges around duct and power entry openings in the bottom of the unit for water protection

Airflow Choice

- Units are shipped with all air openings sealed
  - For downflow (vertical) applications, remove the downflow duct covers
  - For horizontal applications, remove the horizontal duct covers

Gas Piping Inlets, Electrical Inlets and Service Valves

- Standard gas piping and field wiring inlets are located in one central area of the cabinet
- See dimension drawing
- Gauge ports are located inside the cabinet

Optional Accessories

Base Rail Opening Closure Kit

- Kit consists of panels and hardware to cover base rail rigging holes and forklift slot openings

Bottom Gas Entry Kit

- Allows gas piping through the unit base pan

Bottom Power Entry Kit

- Allows field wiring through the unit base pan

Rectangular to Round Duct Adaptor Kits

- Downflow or horizontal kits available
- Converts rectangular supply and return air openings on unit cabinet to round diameter
- Several sizes available

Clip Curb (Full Perimeter)

- Interlocking tabs fasten corners together
- No tools required
- Fully gasketed around curb perimeter and supply and return openings
- Available in 8, 14, 18 and 24 inch heights
- Shipped knocked down

Adjustable Pitch Roof Curb (Full Perimeter)

- Fully adjustable pitch curb provides a level platform for packaged units
- Allows flexible installations on roofs with sloped or uneven angles
- Adjustable from 2/12 to 6/12 pitch
- Fully gasketed around curb perimeter and supply and return openings
- Clip Curb (knock-down) and Welded models available

All Curbs

- IBC 2018 compliant
- CBC 2019 compliant
- Seismic rating - SDS 2.0g, z/h=1, Ip=1.5
- Wind rating - 240 mph (Lateral), 214 mph (Uplift)
- Maximum load rating - 800 lbs.

Adaptor Curbs (not shown)

- Curbs are regionally sourced
- Dimensions vary based upon the source

NOTE - Contact your local sales representative for a detailed cut sheet with applicable dimensions.

Strapping Kit - Hurricane

- Galvanized steel .07 in. thick minimum
- Attaches unit base rails to host structure
- Separate kits available for Slab Mount or Rail Mount

Strapping Kit - Seismic

- Heavy-gauge galvanized steel
- Kit contains 4 brackets and mounting hardware

SPECIFICATIONS

General Data	Model No.	LRP16GE24	LRP16GE36	LRP16GE48	LRP16GE60
	Model No. - Low NOx	LRP16GX24	LRP16GX36	LRP16GX48	LRP16GX60
	Nominal Tonnage	2	3	4	5
Gas Heat Available - See Page 9		**-72**	**-72, -90**	**-108**	**-126**
Cooling Performance	Total cooling capacity - Btuh	23,800	34,000	46,000	57,000
	[1] SEER2 (Btuh/Watt)	15.2	15.0	15.2	15.2
	[1] EER2 (Btuh/Watt)	11.8	11.2	11.5	11.5
	Total cooling capacity - Btuh	23,800	35,400	47,500	57,000
	[1] SEER (Btuh/Watt)	16.0	16.0	16.0	16.0
	[1] EER (Btuh/Watt)	12.5	12.0	12.0	12.0
	Total Unit Watts	1900	2950	3960	4750
[2] Sound Rating Number (dBA)		73	74	73	74
Refrigerant	Type	R-410A	R-410A	R-410A	R-410A
	Charge	5 lbs. 7 oz.	5 lbs. 8 oz.	6 lbs. 10 oz.	9 lbs. 1 oz.
Condensate drain size (fpt) - in.		3/4	3/4	3/4	3/4
Outdoor Coil	Net Face Area - sq. ft.	14.6	16.4	19.5	19.1
	Tube Dia. - in. and No. of Rows	5/16 – 1	5/16 – 1	5/16 – 1	5/16 – 2
	Fins per inch	26	26	26	22
Outdoor Coil Fan	Motor horsepower	1/6	1/6	1/4	1/4
	Dia. - in. and No. of blades	22 – 3	22 – 3	24 – 3	24 – 3
Indoor Coil	Net Face Area - sq. ft.	4.4	4.4	6.8	6.8
	Tube Dia. - in. and No. of rows	3/8 – 3	3/8 – 3	3/8 – 3	3/8 – 3
	Fins per in.	15	15	15	15
Indoor Blower	Blower wheel size dia. x width - in.	10 x 6	10 x 8	10 x 10	12 x 9
	Motor horsepower	1/2	1/2	3/4	1
Net weight of basic unit - lbs.		411	420	522	558
Shipping weight of basic unit (1 Pkg.) - lbs.		421	430	532	568
Electrical characteristics (60 hz)		208/230V-1ph-60Hz			

ELECTRICAL DATA

	Line voltage data - 60 Hz 1 phase	208/230V	208/230V	208/230V	208/230V
	[3] Maximum overcurrent protection (MOCP) amps	25	35	45	50
	[4] Minimum Circuit Ampacity (MCA)	16.7	22.3	29.9	35.4
Compressor	Rated load amps	11.6	15.2	19.8	23.7
	Locked rotor amps	58.3	83.0	126.5	151.0
Outdoor Coil Fan Motor	Full load amps	1.0	1.0	1.7	1.7
	Locked rotor amps	1.9	1.9	3.2	3.2
Indoor Blower Motor	Full load amps	1.1	2.3	3.1	4.0
	Locked rotor amps	4.3	4.3	6.8	9.1

NOTE-Shaded areas indicate AHRI 2023 Ratings.

NOTE-Extremes of operating range are plus and minus 10% of line voltage.

[1] AHRI Certified to AHRI Standard 210/240; 95°F outdoor air temperature, 80°F db/67°F wb entering evaporator air.

[2] Sound Rating Number rated in accordance with test conditions included in AHRI Standard 270.

[3] HACR type circuit breaker or fuse.

[4] Refer to National or Canadian Electrical Code manual to determine wire, fuse and disconnect size requirements.

OPTIONAL ACCESSORIES - ORDER SEPARATELY

Item		Catalog No.	Unit Model No. 24	36	48	60
CONTROLS						
M30 Smart Wi-Fi Thermostat		**15Z69**	•	•	•	•
[1] Remote Outdoor Temperature Sensor		**X2658**	•	•	•	•
COOLING SYSTEM						
Compressor Crankcase Heater		**11X27**	•	•	•	•
Compressor Hard Start Kit		**10J42**	•	•		
		12J90			•	•
Compressor Timed-Off Control		**47J27**	•	•	•	•
Low Ambient Kit (40°F)		**21D20**	•	•	•	•
CABINET						
Base Rail Opening Closure Kit		**21J84**	•	•	•	•
Rectangular to Round Duct Adaptor Kits	Downflow - 14 in. dia.	**20X82**	•	•		
	- 14 in. dia.	**21D26**			•	•
	Horizontal - 14 in. dia.	**21J92**	•	•		
	- 14 in. dia.	**21D24**			•	•
	- 16 in. dia.	**22U78**			•	•
	- 18 in. dia.	**22U79**			•	•
HEATING SYSTEM						
Bottom Gas Entry Kit		**21D34**	•	•	•	•
LPG/Propane Conversion Kit		**15C55**	•	•	•	•
ELECTRICAL						
Bottom Power Entry Kit		**21J78**	•	•	•	•
INDOOR AIR QUALITY						
[2] Healthy Climate® PCO Accessory		**Y7960**	•	•	•	•
Healthy Climate® PCO Accessory Maintenance Kit (Includes PureAir™ Cartridge and UVA lamp)		**Y7972**	•	•	•	•
[3] Internal Filter Rack Kit (filters not furnished)	(1) 20 x 20 + (1) 14 x 20	**11U73**	•	•		
	(2) 20 x 20	**11U74**			•	•
ROOF CURBS						
Clip Curbs						
	8 in. height	**21J13**	•	•		
		21J17			•	•
	14 in. height	**21J14**	•	•		
		21J19			•	•
	18 in. height	**21J15**	•	•		
		21J20			•	•
	24 in. height	**21J16**	•	•		
		21J25			•	•
Adjustable Pitch Roof Curbs						
Welded Curbs		**22V54**	•	•		
		22V55			•	•
Clip Curbs		**21J26**	•	•		
		21U04			•	•
Strapping Kits for Roof Curbs						
Strapping Kit - Hurricane (Slab Mount)		**21J74**	•	•	•	•
Strapping Kit - Hurricane (Rail Mount)		**22C53**	•	•	•	•
Strapping Kit - Seismic		**21J75**	•	•	•	•

[1] Allows the thermostat to display outdoor temperature.

[2] Filter Rack Kit cannot be used with the Healthy Climate® PCO Accessory. High efficiency filtration between the return air inlet and the PCO accessory is required and must be field supplied.

[3] Filters are not furnished and must be field provided.

SPECIFICATIONS - GAS HEAT

General Data	Model No.	LRP16GE24 LRP16GX24 LRP16GE36 LRP16GX36	LRP16GE36 LRP16GX36	LRP16GE48 LRP16GX48	LRP16GE60 LRP16GX60
	Heating Input	**-072**	**-090**	**-108**	**-126**
Heating Capacity Btuh	First Stage - Input	54,000	67,500	81,000	94,500
	Output	43,500	54,500	65,500	76,500
	Second Stage - Input	72,000	90,000	108,000	126,000
	Output	58,000	73,000	88,000	102,000
[1] AFUE		81%	81%	81%	81%
Temperature Rise - °F	First Stage	35 - 45	35 - 45	45 - 55	45 - 55
	Second Stage	45 - 55	45 - 55	50 - 60	50 - 60
Gas Supply Connection (FPT) - in.		1/2	1/2	1/2	1/2
Min. Recommended Gas Supply Pressure		5 in. w.g. Natural Gas, 11 in. w.g. LPG/Propane			

[1] Annual Fuel Utilization Efficiency based on U.S. DOE test procedures and FTC labeling regulations.

HIGH ALTITUDE DERATE

Units may be installed at altitudes up to 4500 feet above sea level without any modification. At altitudes above 4500 feet, units must be derated 4% for every 1000 feet above sea level. Example - At an altitude of 6000 feet the unit would require a derate of 24%.

NOTE - This is the only permissible derate for these units.

FIELD WIRING

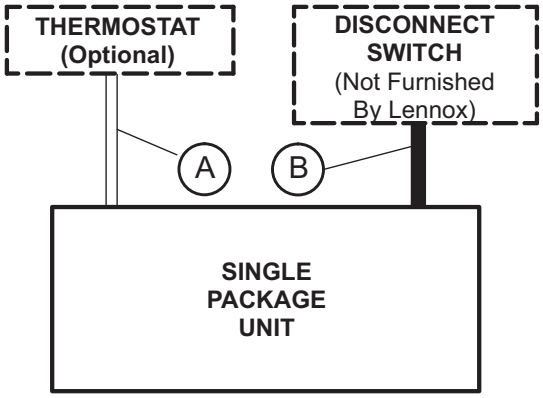

A − Seven Wire Low Voltage (Electronic)

B − Two Wire Power (See Electrical Data Table)

− Field Wiring Not Furnished −

INSTALLATION CLEARANCES

	in.	mm
Front (heat exchanger access)	24	610
Right Side (blower access)	24	610
Left Side (evaporator coil access)	24	610
Back	0	0
Top	48	1219

MINIMUM CLEARANCE TO COMBUSTIBLE MATERIAL

	in.	mm
Front	0	0
Back	0	0
Right Side (vent cover)	12	305
Left Side	0	0
Top	0	0
Below Unit	0	0

COOLING RATINGS - 2017

2 TON - LRP16GE24, LRP16GX24 (1ST STAGE)

Entering Wet Bulb Temperature	Total Air Volume	Outdoor Air Temperature Entering Outdoor Coil																			
		75°F					85°F					95°F					105°F				
		Total Cool Cap.	Comp. Motor Input	Sensible To Total Ratio (S/T) Dry Bulb			Total Cool Cap.	Comp. Motor Input	Sensible To Total Ratio (S/T) Dry Bulb			Total Cool Cap.	Comp. Motor Input	Sensible To Total Ratio (S/T) Dry Bulb			Total Cool Cap.	Comp. Motor Input	Sensible To Total Ratio (S/T) Dry Bulb		
	cfm	kBtuh	kW	75°F	80°F	85°F	kBtuh	kW	75°F	80°F	85°F	kBtuh	kW	75°F	80°F	85°F	kBtuh	kW	75°F	80°F	85°F
63°F	440	18.60	5.50	0.71	0.84	0.96	17.80	5.20	0.72	0.85	0.98	16.90	5.00	0.74	0.87	1.00	15.90	4.70	0.76	0.90	1.00
	560	19.80	5.80	0.77	0.91	1.00	18.90	5.50	0.78	0.93	1.00	17.90	5.20	0.80	0.96	1.00	16.80	4.90	0.82	0.99	1.00
	720	21.00	6.20	0.83	1.00	1.00	20.00	5.90	0.85	1.00	1.00	19.10	5.60	0.88	1.00	1.00	18.10	5.30	0.91	1.00	1.00
67°F	440	19.80	5.80	0.57	0.69	0.80	18.90	5.50	0.57	0.70	0.82	18.00	5.30	0.59	0.71	0.84	16.90	5.00	0.60	0.74	0.87
	560	21.00	6.20	0.60	0.74	0.87	20.00	5.90	0.61	0.76	0.90	19.00	5.60	0.62	0.77	0.92	17.70	5.20	0.63	0.79	0.96
	720	22.00	6.40	0.64	0.81	0.97	21.00	6.20	0.65	0.83	0.99	19.90	5.80	0.66	0.85	1.00	18.60	5.50	0.69	0.89	1.00
71°F	440	20.80	6.10	0.43	0.55	0.66	20.00	5.90	0.43	0.56	0.67	19.00	5.60	0.44	0.57	0.69	17.80	5.20	0.45	0.58	0.71
	560	22.00	6.40	0.45	0.58	0.72	21.20	6.20	0.45	0.60	0.73	20.00	5.90	0.46	0.61	0.75	18.80	5.50	0.46	0.62	0.77
	720	23.20	6.80	0.47	0.62	0.78	22.20	6.50	0.47	0.64	0.80	21.00	6.20	0.49	0.66	0.83	19.60	5.70	0.48	0.67	0.86

2 TON - LRP16GE24, LRP16GX24 (2ND STAGE)

Entering Wet Bulb Temperature	Total Air Volume	Outdoor Air Temperature Entering Outdoor Coil																			
		85°F					95°F					105°F					115°F				
		Total Cool Cap.	Comp. Motor Input	Sensible To Total Ratio (S/T) Dry Bulb			Total Cool Cap.	Comp. Motor Input	Sensible To Total Ratio (S/T) Dry Bulb			Total Cool Cap.	Comp. Motor Input	Sensible To Total Ratio (S/T) Dry Bulb			Total Cool Cap.	Comp. Motor Input	Sensible To Total Ratio (S/T) Dry Bulb		
	cfm	kBtuh	kW	75°F	80°F	85°F	kBtuh	kW	75°F	80°F	85°F	kBtuh	kW	75°F	80°F	85°F	kBtuh	kW	75°F	80°F	85°F
63°F	600	23.00	6.70	0.72	0.84	0.97	21.80	6.40	0.73	0.86	0.99	20.80	6.10	0.75	0.88	1.00	19.60	5.70	0.77	0.91	1.00
	800	24.40	7.20	0.78	0.94	1.00	23.40	6.90	0.79	0.96	1.00	22.00	6.40	0.82	0.99	1.00	20.80	6.10	0.85	1.00	1.00
	1000	25.60	7.50	0.85	1.00	1.00	24.60	7.20	0.87	1.00	1.00	23.40	6.90	0.89	1.00	1.00	22.00	6.40	0.93	1.00	1.00
67°F	600	24.20	7.10	0.57	0.69	0.81	23.20	6.80	0.58	0.70	0.83	22.00	6.40	0.59	0.72	0.85	20.60	6.00	0.60	0.74	0.88
	800	25.80	7.60	0.61	0.76	0.90	24.60	7.20	0.62	0.78	0.93	23.20	6.80	0.63	0.80	0.95	21.80	6.40	0.65	0.82	0.98
	1000	26.80	7.90	0.64	0.81	0.99	25.60	7.50	0.67	0.85	1.00	24.20	7.10	0.68	0.87	1.00	22.60	6.60	0.70	0.91	1.00
71°F	600	25.40	7.40	0.44	0.56	0.67	24.40	7.20	0.44	0.56	0.68	23.00	6.70	0.45	0.57	0.70	21.80	6.40	0.45	0.59	0.72
	800	27.20	8.00	0.46	0.60	0.74	25.80	7.60	0.46	0.61	0.74	24.40	7.20	0.46	0.62	0.78	23.00	6.70	0.47	0.63	0.80
	1000	28.20	8.30	0.48	0.64	0.80	26.80	7.90	0.48	0.65	0.83	25.40	7.40	0.49	0.67	0.85	23.60	6.90	0.50	0.69	0.88

3 TON - LRP16GE36, LRP16GX36 (1ST STAGE)

Entering Wet Bulb Temperature	Total Air Volume	Outdoor Air Temperature Entering Outdoor Coil																			
		75°F					85°F					95°F					105°F				
		Total Cool Cap.	Comp. Motor Input	Sensible To Total Ratio (S/T) Dry Bulb			Total Cool Cap.	Comp. Motor Input	Sensible To Total Ratio (S/T) Dry Bulb			Total Cool Cap.	Comp. Motor Input	Sensible To Total Ratio (S/T) Dry Bulb			Total Cool Cap.	Comp. Motor Input	Sensible To Total Ratio (S/T) Dry Bulb		
	cfm	kBtuh	kW	75°F	80°F	85°F	kBtuh	kW	75°F	80°F	85°F	kBtuh	kW	75°F	80°F	85°F	kBtuh	kW	75°F	80°F	85°F
63°F	720	27.20	8.00	0.74	0.88	1.00	25.80	7.60	0.76	0.90	1.00	24.60	7.20	0.78	0.93	1.00	23.20	6.80	0.79	0.96	1.00
	840	28.20	8.30	0.78	0.93	1.00	26.80	7.90	0.80	0.95	1.00	25.40	7.40	0.82	0.98	1.00	24.00	7.00	0.84	1.00	1.00
	1000	29.20	8.60	0.83	0.99	1.00	27.80	8.10	0.85	1.00	1.00	26.60	7.80	0.87	1.00	1.00	25.20	7.40	0.90	1.00	1.00
67°F	720	28.80	8.40	0.58	0.72	0.84	27.40	8.00	0.60	0.73	0.87	26.00	7.60	0.61	0.75	0.89	24.60	7.20	0.62	0.77	0.92
	840	29.80	8.70	0.61	0.76	0.90	28.40	8.30	0.62	0.77	0.92	26.80	7.90	0.63	0.79	0.94	25.20	7.40	0.64	0.81	0.98
	1000	30.80	9.00	0.64	0.80	0.96	29.40	8.60	0.65	0.82	0.98	27.80	8.10	0.67	0.85	1.00	26.20	7.70	0.68	0.87	1.00
71°F	720	30.40	8.90	0.44	0.57	0.69	29.00	8.50	0.45	0.58	0.71	27.60	8.10	0.45	0.59	0.73	26.00	7.60	0.46	0.60	0.75
	840	31.40	9.20	0.45	0.59	0.73	30.00	8.80	0.46	0.61	0.75	28.40	8.30	0.47	0.62	0.76	26.80	7.90	0.47	0.63	0.79
	1000	32.60	9.60	0.47	0.62	0.78	31.00	9.10	0.47	0.64	0.79	29.40	8.60	0.48	0.64	0.82	27.60	8.10	0.49	0.67	0.85

3 TON - LRP16GE36, LRP16GX36 (2ND STAGE)

Entering Wet Bulb Temperature	Total Air Volume	Outdoor Air Temperature Entering Outdoor Coil																			
		85°F					95°F					105°F					115°F				
		Total Cool Cap.	Comp. Motor Input	Sensible To Total Ratio (S/T) Dry Bulb			Total Cool Cap.	Comp. Motor Input	Sensible To Total Ratio (S/T) Dry Bulb			Total Cool Cap.	Comp. Motor Input	Sensible To Total Ratio (S/T) Dry Bulb			Total Cool Cap.	Comp. Motor Input	Sensible To Total Ratio (S/T) Dry Bulb		
	cfm	kBtuh	kW	75°F	80°F	85°F	kBtuh	kW	75°F	80°F	85°F	kBtuh	kW	75°F	80°F	85°F	kBtuh	kW	75°F	80°F	85°F
63°F	1000	35.00	10.30	0.74	0.88	1.00	33.40	9.80	0.76	0.90	1.00	31.60	9.30	0.78	0.93	1.00	29.60	8.70	0.80	0.96	1.00
	1200	36.40	10.70	0.79	0.94	1.00	34.60	10.10	0.81	0.97	1.00	32.80	9.60	0.82	0.99	1.00	30.80	9.00	0.85	1.00	1.00
	1400	37.40	11.00	0.83	0.99	1.00	35.60	10.40	0.85	1.00	1.00	34.00	10.00	0.87	1.00	1.00	32.00	9.40	0.91	1.00	1.00
67°F	1000	37.00	10.80	0.59	0.72	0.85	35.20	10.30	0.60	0.73	0.87	33.40	9.80	0.61	0.76	0.90	31.20	9.10	0.62	0.78	0.93
	1200	38.50	11.30	0.61	0.77	0.91	36.40	10.70	0.63	0.78	0.93	34.40	10.10	0.64	0.80	0.96	32.20	9.40	0.65	0.83	0.99
	1400	39.50	11.60	0.64	0.81	0.97	37.20	10.90	0.65	0.83	0.99	35.20	10.30	0.67	0.85	1.00	32.80	9.60	0.69	0.89	1.00
71°F	1000	39.00	11.40	0.44	0.57	0.70	37.00	10.80	0.45	0.58	0.71	35.00	10.30	0.45	0.60	0.73	32.80	9.60	0.46	0.61	0.76
	1200	40.00	11.70	0.46	0.60	0.74	38.50	11.30	0.47	0.61	0.76	36.20	10.60	0.47	0.63	0.78	33.80	9.90	0.48	0.64	0.81
	1400	41.50	12.20	0.47	0.63	0.79	39.00	11.40	0.48	0.64	0.81	37.00	10.80	0.48	0.66	0.84	34.60	10.10	0.49	0.68	0.87

NOTE - Values based on 0.50 in. w.c. external static pressure.

COOLING RATINGS - 2017

4 TON - LRP16GE48, LRP16GX48 (1ST STAGE)

Entering Wet Bulb Temperature	Total Air Volume	Outdoor Air Temperature Entering Outdoor Coil																			
		75°F					85°F					95°F					105°F				
		Total Cool Cap.	Comp. Motor Input	Sensible To Total Ratio (S/T) Dry Bulb			Total Cool Cap.	Comp. Motor Input	Sensible To Total Ratio (S/T) Dry Bulb			Total Cool Cap.	Comp. Motor Input	Sensible To Total Ratio (S/T) Dry Bulb			Total Cool Cap.	Comp. Motor Input	Sensible To Total Ratio (S/T) Dry Bulb		
	cfm	kBtuh	kW	75°F	80°F	85°F	kBtuh	kW	75°F	80°F	85°F	kBtuh	kW	75°F	80°F	85°F	kBtuh	kW	75°F	80°F	85°F
63°F	1000	36.40	10.70	0.75	0.89	1.00	34.60	10.10	0.77	0.91	1.00	32.60	9.60	0.79	0.94	1.00	30.40	8.90	0.81	0.98	1.00
	1120	37.40	11.00	0.78	0.93	1.00	35.60	10.40	0.80	0.95	1.00	33.60	9.80	0.82	0.98	1.00	31.40	9.20	0.85	1.00	1.00
	1230	38.00	11.10	0.80	0.96	1.00	36.40	10.70	0.82	0.98	1.00	34.40	10.10	0.84	1.00	1.00	32.20	9.40	0.87	1.00	1.00
67°F	1000	38.50	11.30	0.60	0.73	0.86	36.60	10.70	0.60	0.75	0.88	34.60	10.10	0.62	0.77	0.91	32.20	9.40	0.63	0.79	0.94
	1120	39.50	11.60	0.61	0.75	0.89	37.60	11.00	0.62	0.77	0.92	35.40	10.40	0.64	0.79	0.95	33.00	9.70	0.65	0.82	0.98
	1230	40.50	11.90	0.63	0.78	0.93	38.50	11.30	0.64	0.80	0.95	36.00	10.60	0.65	0.82	0.98	33.60	9.80	0.67	0.85	1.00
71°F	1000	40.50	11.90	0.45	0.58	0.70	38.50	11.30	0.45	0.59	0.72	36.40	10.70	0.46	0.60	0.74	34.00	10.00	0.47	0.62	0.76
	1120	41.50	12.20	0.45	0.60	0.73	39.50	11.60	0.46	0.61	0.75	37.40	11.00	0.46	0.62	0.77	34.80	10.20	0.47	0.64	0.80
	1230	42.50	12.50	0.46	0.61	0.76	40.50	11.90	0.46	0.63	0.77	38.00	11.10	0.47	0.64	0.79	35.40	10.40	0.48	0.66	0.83

4 TON - LRP16GE48, LRP16GX48 (2ND STAGE)

Entering Wet Bulb Temperature	Total Air Volume	Outdoor Air Temperature Entering Outdoor Coil																			
		85°F					95°F					105°F					115°F				
		Total Cool Cap.	Comp. Motor Input	Sensible To Total Ratio (S/T) Dry Bulb			Total Cool Cap.	Comp. Motor Input	Sensible To Total Ratio (S/T) Dry Bulb			Total Cool Cap.	Comp. Motor Input	Sensible To Total Ratio (S/T) Dry Bulb			Total Cool Cap.	Comp. Motor Input	Sensible To Total Ratio (S/T) Dry Bulb		
	cfm	kBtuh	kW	75°F	80°F	85°F	kBtuh	kW	75°F	80°F	85°F	kBtuh	kW	75°F	80°F	85°F	kBtuh	kW	75°F	80°F	85°F
63°F	1400	47.00	13.80	0.75	0.89	1.00	45.00	13.20	0.77	0.91	1.00	42.50	12.50	0.78	0.93	1.00	40.00	11.70	0.80	0.96	1.00
	1600	48.50	14.20	0.78	0.93	1.00	46.00	13.50	0.80	0.95	1.00	44.00	12.90	0.82	0.98	1.00	41.00	12.00	0.84	1.00	1.00
	1800	49.50	14.50	0.81	0.97	1.00	47.00	13.80	0.83	0.99	1.00	45.00	13.20	0.85	1.00	1.00	42.50	12.50	0.88	1.00	1.00
67°F	1400	49.50	14.50	0.60	0.73	0.86	47.00	13.80	0.60	0.74	0.88	45.00	13.20	0.62	0.76	0.90	42.00	12.30	0.63	0.78	0.93
	1600	51.00	14.90	0.61	0.76	0.90	48.50	14.20	0.62	0.78	0.92	46.00	13.50	0.64	0.80	0.95	43.00	12.60	0.65	0.82	0.98
	1800	52.00	15.20	0.63	0.79	0.94	49.50	14.50	0.64	0.81	0.97	47.00	13.80	0.66	0.83	0.99	44.00	12.90	0.67	0.86	1.00
71°F	1400	51.50	15.10	0.45	0.58	0.71	49.00	14.40	0.46	0.59	0.72	47.00	13.80	0.46	0.60	0.74	44.00	12.90	0.47	0.62	0.76
	1600	53.00	15.50	0.45	0.60	0.74	50.50	14.80	0.46	0.61	0.75	48.00	14.10	0.47	0.63	0.78	45.00	13.20	0.47	0.64	0.80
	1800	54.00	15.80	0.46	0.62	0.77	51.50	15.10	0.47	0.63	0.79	49.00	14.40	0.48	0.65	0.81	46.00	13.50	0.48	0.66	0.84

5 TON - LRP16GE60, LRP16GX60 (1ST STAGE)

Entering Wet Bulb Temperature	Total Air Volume	Outdoor Air Temperature Entering Outdoor Coil																			
		75°F					85°F					95°F					105°F				
		Total Cool Cap.	Comp. Motor Input	Sensible To Total Ratio (S/T) Dry Bulb			Total Cool Cap.	Comp. Motor Input	Sensible To Total Ratio (S/T) Dry Bulb			Total Cool Cap.	Comp. Motor Input	Sensible To Total Ratio (S/T) Dry Bulb			Total Cool Cap.	Comp. Motor Input	Sensible To Total Ratio (S/T) Dry Bulb		
	cfm	kBtuh	kW	75°F	80°F	85°F	kBtuh	kW	75°F	80°F	85°F	kBtuh	kW	75°F	80°F	85°F	kBtuh	kW	75°F	80°F	85°F
63°F	1130	45.50	13.30	0.73	0.85	0.97	43.50	12.70	0.74	0.87	0.99	41.50	12.20	0.75	0.89	1.00	39.00	11.40	0.77	0.92	1.00
	1260	47.00	13.80	0.74	0.88	1.00	45.00	13.20	0.76	0.90	1.00	42.50	12.50	0.78	0.92	1.00	40.00	11.70	0.80	0.96	1.00
	1390	48.00	14.10	0.77	0.91	1.00	46.00	13.50	0.78	0.93	1.00	43.50	12.70	0.80	0.96	1.00	40.50	11.90	0.82	0.99	1.00
67°F	1130	48.00	14.10	0.58	0.70	0.82	46.00	13.50	0.59	0.71	0.83	43.50	12.70	0.59	0.73	0.86	41.00	12.00	0.61	0.75	0.89
	1260	49.50	14.50	0.59	0.72	0.85	47.50	13.90	0.60	0.73	0.87	45.00	13.20	0.61	0.75	0.89	42.00	12.30	0.62	0.77	0.92
	1390	50.50	14.80	0.60	0.74	0.88	48.50	14.20	0.61	0.76	0.90	46.00	13.50	0.62	0.78	0.92	43.00	12.60	0.64	0.80	0.95
71°F	1130	50.50	14.80	0.44	0.56	0.68	48.50	14.20	0.44	0.57	0.69	46.00	13.50	0.45	0.58	0.70	43.00	12.60	0.46	0.59	0.72
	1260	52.00	15.20	0.45	0.58	0.70	50.00	14.70	0.45	0.58	0.71	47.00	13.80	0.45	0.60	0.73	44.50	13.00	0.46	0.61	0.75
	1390	53.00	15.50	0.45	0.59	0.72	51.00	14.90	0.45	0.60	0.73	48.50	14.20	0.46	0.61	0.75	45.50	13.30	0.47	0.63	0.78

5 TON - LRP16GE60, LRP16GX60 (2ND STAGE)

Entering Wet Bulb Temperature	Total Air Volume	Outdoor Air Temperature Entering Outdoor Coil																			
		85°F					95°F					105°F					115°F				
		Total Cool Cap.	Comp. Motor Input	Sensible To Total Ratio (S/T) Dry Bulb			Total Cool Cap.	Comp. Motor Input	Sensible To Total Ratio (S/T) Dry Bulb			Total Cool Cap.	Comp. Motor Input	Sensible To Total Ratio (S/T) Dry Bulb			Total Cool Cap.	Comp. Motor Input	Sensible To Total Ratio (S/T) Dry Bulb		
	cfm	kBtuh	kW	75°F	80°F	85°F	kBtuh	kW	75°F	80°F	85°F	kBtuh	kW	75°F	80°F	85°F	kBtuh	kW	75°F	80°F	85°F
63°F	1600	58.00	17.00	0.73	0.86	0.98	55.50	16.30	0.74	0.88	1.00	52.50	15.40	0.76	0.90	1.00	49.50	14.50	0.78	0.93	1.00
	1800	59.50	17.40	0.75	0.89	1.00	57.00	16.70	0.77	0.91	1.00	54.00	15.80	0.79	0.94	1.00	51.00	14.90	0.81	0.97	1.00
	1900	60.00	17.60	0.76	0.91	1.00	57.50	16.90	0.78	0.93	1.00	54.50	16.00	0.80	0.96	1.00	51.50	15.10	0.82	0.98	1.00
67°F	1600	61.00	17.90	0.58	0.71	0.83	58.00	17.00	0.59	0.72	0.85	55.50	16.30	0.60	0.74	0.87	52.00	15.20	0.61	0.76	0.89
	1800	62.50	18.30	0.60	0.73	0.86	59.50	17.40	0.60	0.75	0.88	56.50	16.60	0.62	0.76	0.91	53.50	15.70	0.63	0.78	0.94
	1900	63.00	18.50	0.60	0.74	0.88	60.50	17.70	0.61	0.76	0.90	57.50	16.90	0.63	0.78	0.92	54.00	15.80	0.64	0.80	0.96
71°F	1600	64.00	18.80	0.44	0.57	0.69	61.00	17.90	0.45	0.58	0.70	58.00	17.00	0.45	0.59	0.71	54.50	16.00	0.46	0.60	0.73
	1800	65.50	19.20	0.45	0.58	0.71	62.50	18.30	0.45	0.59	0.72	59.50	17.40	0.46	0.60	0.74	56.00	16.40	0.46	0.62	0.76
	1900	66.50	19.50	0.45	0.59	0.72	63.00	18.50	0.46	0.60	0.74	60.00	17.60	0.46	0.61	0.76	56.50	16.60	0.47	0.63	0.78

NOTE - Values based on 0.50 in. w.c. external static pressure.

COOLING RATINGS - 2023

2 TON - LRP16GE24, LRP16GX24 (1ST STAGE)

Entering Wet Bulb Temperature	Total Air Volume	Outdoor Air Temperature Entering Outdoor Coil																			
		75°F					85°F					95°F					105°F				
		Total Cool Cap.	Comp. Motor Input	Sensible To Total Ratio (S/T) Dry Bulb			Total Cool Cap.	Comp. Motor Input	Sensible To Total Ratio (S/T) Dry Bulb			Total Cool Cap.	Comp. Motor Input	Sensible To Total Ratio (S/T) Dry Bulb			Total Cool Cap.	Comp. Motor Input	Sensible To Total Ratio (S/T) Dry Bulb		
	cfm	kBtuh	kW	75°F	80°F	85°F	kBtuh	kW	75°F	80°F	85°F	kBtuh	kW	75°F	80°F	85°F	kBtuh	kW	75°F	80°F	85°F
63°F	440	18.60	5.50	0.71	0.84	0.96	17.80	5.20	0.72	0.85	0.98	16.90	5.00	0.74	0.87	1.00	15.90	4.70	0.76	0.90	1.00
	560	19.80	5.80	0.77	0.91	1.00	18.90	5.50	0.78	0.93	1.00	17.90	5.20	0.80	0.96	1.00	16.80	4.90	0.82	0.99	1.00
	720	21.00	6.20	0.83	1.00	1.00	20.00	5.90	0.85	1.00	1.00	19.10	5.60	0.88	1.00	1.00	18.10	5.30	0.91	1.00	1.00
67°F	440	19.80	5.80	0.57	0.69	0.80	18.90	5.50	0.57	0.70	0.82	18.00	5.30	0.59	0.71	0.84	16.90	5.00	0.60	0.74	0.87
	560	21.00	6.20	0.60	0.74	0.87	20.00	5.90	0.61	0.76	0.90	19.00	5.60	0.62	0.77	0.92	17.70	5.20	0.63	0.79	0.96
	720	22.00	6.40	0.64	0.81	0.97	21.00	6.20	0.65	0.83	0.99	19.90	5.80	0.66	0.85	1.00	18.60	5.50	0.69	0.89	1.00
71°F	440	20.80	6.10	0.43	0.55	0.66	20.00	5.90	0.43	0.56	0.67	19.00	5.60	0.44	0.57	0.69	17.80	5.20	0.45	0.58	0.71
	560	22.00	6.40	0.45	0.58	0.72	21.20	6.20	0.45	0.60	0.73	20.00	5.90	0.46	0.61	0.75	18.80	5.50	0.46	0.62	0.77
	720	23.20	6.80	0.47	0.62	0.78	22.20	6.50	0.47	0.64	0.80	21.00	6.20	0.49	0.66	0.83	19.60	5.70	0.48	0.67	0.86

2 TON - LRP16GE24, LRP16GX24 (2ND STAGE)

Entering Wet Bulb Temperature	Total Air Volume	Outdoor Air Temperature Entering Outdoor Coil																			
		85°F					95°F					105°F					115°F				
		Total Cool Cap.	Comp. Motor Input	Sensible To Total Ratio (S/T) Dry Bulb			Total Cool Cap.	Comp. Motor Input	Sensible To Total Ratio (S/T) Dry Bulb			Total Cool Cap.	Comp. Motor Input	Sensible To Total Ratio (S/T) Dry Bulb			Total Cool Cap.	Comp. Motor Input	Sensible To Total Ratio (S/T) Dry Bulb		
	cfm	kBtuh	kW	75°F	80°F	85°F	kBtuh	kW	75°F	80°F	85°F	kBtuh	kW	75°F	80°F	85°F	kBtuh	kW	75°F	80°F	85°F
63°F	600	23.00	6.70	0.72	0.84	0.97	21.80	6.40	0.73	0.86	0.99	20.80	6.10	0.75	0.88	1.00	19.60	5.70	0.77	0.91	1.00
	800	24.40	7.20	0.78	0.94	1.00	23.40	6.90	0.79	0.96	1.00	22.00	6.40	0.82	0.99	1.00	20.80	6.10	0.85	1.00	1.00
	1000	25.60	7.50	0.85	1.00	1.00	24.60	7.20	0.87	1.00	1.00	23.40	6.90	0.89	1.00	1.00	22.00	6.40	0.93	1.00	1.00
67°F	600	24.20	7.10	0.57	0.69	0.81	23.20	6.80	0.58	0.70	0.83	22.00	6.40	0.59	0.72	0.85	20.60	6.00	0.60	0.74	0.88
	800	25.80	7.60	0.61	0.76	0.90	24.60	7.20	0.62	0.78	0.93	23.20	6.80	0.63	0.80	0.95	21.80	6.40	0.65	0.82	0.98
	1000	26.80	7.90	0.64	0.81	0.99	25.60	7.50	0.67	0.85	1.00	24.20	7.10	0.68	0.87	1.00	22.60	6.60	0.70	0.91	1.00
71°F	600	25.40	7.40	0.44	0.56	0.67	24.40	7.20	0.44	0.56	0.68	23.00	6.70	0.45	0.57	0.70	21.80	6.40	0.45	0.59	0.72
	800	27.20	8.00	0.46	0.60	0.74	25.80	7.60	0.46	0.61	0.74	24.40	7.20	0.46	0.62	0.78	23.00	6.70	0.47	0.63	0.80
	1000	28.20	8.30	0.48	0.64	0.80	26.80	7.90	0.48	0.65	0.83	25.40	7.40	0.49	0.67	0.85	23.60	6.90	0.50	0.69	0.88

3 TON - LRP16GE36, LRP16GX36 (1ST STAGE)

Entering Wet Bulb Temperature	Total Air Volume	Outdoor Air Temperature Entering Outdoor Coil																			
		75°F					85°F					95°F					105°F				
		Total Cool Cap.	Comp. Motor Input	Sensible To Total Ratio (S/T) Dry Bulb			Total Cool Cap.	Comp. Motor Input	Sensible To Total Ratio (S/T) Dry Bulb			Total Cool Cap.	Comp. Motor Input	Sensible To Total Ratio (S/T) Dry Bulb			Total Cool Cap.	Comp. Motor Input	Sensible To Total Ratio (S/T) Dry Bulb		
	cfm	kBtuh	kW	75°F	80°F	85°F	kBtuh	kW	75°F	80°F	85°F	kBtuh	kW	75°F	80°F	85°F	kBtuh	kW	75°F	80°F	85°F
63°F	720	27.20	8.00	0.74	0.88	1.00	25.80	7.60	0.76	0.90	1.00	24.60	7.20	0.78	0.93	1.00	23.20	6.80	0.79	0.96	1.00
	840	28.20	8.30	0.78	0.93	1.00	26.80	7.90	0.80	0.95	1.00	25.40	7.40	0.82	0.98	1.00	24.00	7.00	0.84	1.00	1.00
	1000	29.20	8.60	0.83	0.99	1.00	27.80	8.10	0.85	1.00	1.00	26.60	7.80	0.87	1.00	1.00	25.20	7.40	0.90	1.00	1.00
67°F	720	28.80	8.40	0.58	0.72	0.84	27.40	8.00	0.60	0.73	0.87	26.00	7.60	0.61	0.75	0.89	24.60	7.20	0.62	0.77	0.92
	840	29.80	8.70	0.61	0.76	0.90	28.40	8.30	0.62	0.77	0.92	26.80	7.90	0.63	0.79	0.94	25.20	7.40	0.64	0.81	0.98
	1000	30.80	9.00	0.64	0.80	0.96	29.40	8.60	0.65	0.82	0.98	27.80	8.10	0.67	0.85	1.00	26.20	7.70	0.68	0.87	1.00
71°F	720	30.40	8.90	0.44	0.57	0.69	29.00	8.50	0.45	0.58	0.71	27.60	8.10	0.45	0.59	0.73	26.00	7.60	0.46	0.60	0.75
	840	31.40	9.20	0.45	0.59	0.73	30.00	8.80	0.46	0.61	0.75	28.40	8.30	0.47	0.62	0.76	26.80	7.90	0.47	0.63	0.79
	1000	32.60	9.60	0.47	0.62	0.78	31.00	9.10	0.47	0.64	0.79	29.40	8.60	0.48	0.64	0.82	27.60	8.10	0.49	0.67	0.85

3 TON - LRP16GE36, LRP16GX36 (2ND STAGE)

Entering Wet Bulb Temperature	Total Air Volume	Outdoor Air Temperature Entering Outdoor Coil																			
		85°F					95°F					105°F					115°F				
		Total Cool Cap.	Comp. Motor Input	Sensible To Total Ratio (S/T) Dry Bulb			Total Cool Cap.	Comp. Motor Input	Sensible To Total Ratio (S/T) Dry Bulb			Total Cool Cap.	Comp. Motor Input	Sensible To Total Ratio (S/T) Dry Bulb			Total Cool Cap.	Comp. Motor Input	Sensible To Total Ratio (S/T) Dry Bulb		
	cfm	kBtuh	kW	75°F	80°F	85°F	kBtuh	kW	75°F	80°F	85°F	kBtuh	kW	75°F	80°F	85°F	kBtuh	kW	75°F	80°F	85°F
63°F	1000	35.00	10.30	0.74	0.88	1.00	33.40	9.80	0.76	0.90	1.00	31.60	9.30	0.78	0.93	1.00	29.60	8.70	0.80	0.96	1.00
	1200	36.40	10.70	0.79	0.94	1.00	34.60	10.10	0.81	0.97	1.00	32.80	9.60	0.82	0.99	1.00	30.80	9.00	0.85	1.00	1.00
	1400	37.40	11.00	0.83	0.99	1.00	35.60	10.40	0.85	1.00	1.00	34.00	10.00	0.87	1.00	1.00	32.00	9.40	0.91	1.00	1.00
67°F	1000	37.00	10.80	0.59	0.72	0.85	35.20	10.30	0.60	0.73	0.87	33.40	9.80	0.61	0.76	0.90	31.20	9.10	0.62	0.78	0.93
	1200	38.50	11.30	0.61	0.77	0.91	36.40	10.70	0.63	0.78	0.93	34.40	10.10	0.64	0.80	0.96	32.20	9.40	0.65	0.83	0.99
	1400	39.50	11.60	0.64	0.81	0.97	37.20	10.90	0.65	0.83	0.99	35.20	10.30	0.67	0.85	1.00	32.80	9.60	0.69	0.89	1.00
71°F	1000	39.00	11.40	0.44	0.57	0.70	37.00	10.80	0.45	0.58	0.71	35.00	10.30	0.45	0.60	0.73	32.80	9.60	0.46	0.61	0.76
	1200	40.00	11.70	0.46	0.60	0.74	38.50	11.30	0.47	0.61	0.76	36.20	10.60	0.47	0.63	0.78	33.80	9.90	0.48	0.64	0.81
	1400	41.50	12.20	0.47	0.63	0.79	39.00	11.40	0.48	0.64	0.81	37.00	10.80	0.48	0.66	0.84	34.60	10.10	0.49	0.68	0.87

NOTE - Values based on 0.58 in. w.c. external static pressure.

COOLING RATINGS - 2023

4 TON - LRP16GE48, LRP16GX48 (1ST STAGE)

Entering Wet Bulb Temperature	Total Air Volume	Outdoor Air Temperature Entering Outdoor Coil																			
		75°F					85°F					95°F					105°F				
		Total Cool Cap.	Comp. Motor Input	Sensible To Total Ratio (S/T) Dry Bulb			Total Cool Cap.	Comp. Motor Input	Sensible To Total Ratio (S/T) Dry Bulb			Total Cool Cap.	Comp. Motor Input	Sensible To Total Ratio (S/T) Dry Bulb			Total Cool Cap.	Comp. Motor Input	Sensible To Total Ratio (S/T) Dry Bulb		
	cfm	kBtuh	kW	75°F	80°F	85°F	kBtuh	kW	75°F	80°F	85°F	kBtuh	kW	75°F	80°F	85°F	kBtuh	kW	75°F	80°F	85°F
63°F	1000	36.40	10.70	0.75	0.89	1.00	34.60	10.10	0.77	0.91	1.00	32.60	9.60	0.79	0.94	1.00	30.40	8.90	0.81	0.98	1.00
	1120	37.40	11.00	0.78	0.93	1.00	35.60	10.40	0.80	0.95	1.00	33.60	9.80	0.82	0.98	1.00	31.40	9.20	0.85	1.00	1.00
	1230	38.00	11.10	0.80	0.96	1.00	36.40	10.70	0.82	0.98	1.00	34.40	10.10	0.84	1.00	1.00	32.20	9.40	0.87	1.00	1.00
67°F	1000	38.50	11.30	0.60	0.73	0.86	36.60	10.70	0.60	0.75	0.88	34.60	10.10	0.62	0.77	0.91	32.20	9.40	0.63	0.79	0.94
	1120	39.50	11.60	0.61	0.75	0.89	37.60	11.00	0.62	0.77	0.92	35.40	10.40	0.64	0.79	0.95	33.00	9.70	0.65	0.82	0.98
	1230	40.50	11.90	0.63	0.78	0.93	38.50	11.30	0.64	0.80	0.95	36.00	10.60	0.65	0.82	0.98	33.60	9.80	0.67	0.85	1.00
71°F	1000	40.50	11.90	0.45	0.58	0.70	38.50	11.30	0.45	0.59	0.72	36.40	10.70	0.46	0.60	0.74	34.00	10.00	0.47	0.62	0.76
	1120	41.50	12.20	0.45	0.60	0.73	39.50	11.60	0.46	0.61	0.75	37.40	11.00	0.46	0.62	0.77	34.80	10.20	0.47	0.64	0.80
	1230	42.50	12.50	0.46	0.61	0.76	40.50	11.90	0.46	0.63	0.77	38.00	11.10	0.47	0.64	0.79	35.40	10.40	0.48	0.66	0.83

4 TON - LRP16GE48, LRP16GX48 (2ND STAGE)

Entering Wet Bulb Temperature	Total Air Volume	Outdoor Air Temperature Entering Outdoor Coil																			
		85°F					95°F					105°F					115°F				
		Total Cool Cap.	Comp. Motor Input	Sensible To Total Ratio (S/T) Dry Bulb			Total Cool Cap.	Comp. Motor Input	Sensible To Total Ratio (S/T) Dry Bulb			Total Cool Cap.	Comp. Motor Input	Sensible To Total Ratio (S/T) Dry Bulb			Total Cool Cap.	Comp. Motor Input	Sensible To Total Ratio (S/T) Dry Bulb		
	cfm	kBtuh	kW	75°F	80°F	85°F	kBtuh	kW	75°F	80°F	85°F	kBtuh	kW	75°F	80°F	85°F	kBtuh	kW	75°F	80°F	85°F
63°F	1400	47.00	13.80	0.75	0.89	1.00	45.00	13.20	0.77	0.91	1.00	42.50	12.50	0.78	0.93	1.00	40.00	11.70	0.80	0.96	1.00
	1600	48.50	14.20	0.78	0.93	1.00	46.00	13.50	0.80	0.95	1.00	44.00	12.90	0.82	0.98	1.00	41.00	12.00	0.84	1.00	1.00
	1800	49.50	14.50	0.81	0.97	1.00	47.00	13.80	0.83	0.99	1.00	45.00	13.20	0.85	1.00	1.00	42.50	12.50	0.88	1.00	1.00
67°F	1400	49.50	14.50	0.60	0.73	0.86	47.00	13.80	0.60	0.74	0.88	45.00	13.20	0.62	0.76	0.90	42.00	12.30	0.63	0.78	0.93
	1600	51.00	14.90	0.61	0.76	0.90	48.50	14.20	0.62	0.78	0.92	46.00	13.50	0.64	0.80	0.95	43.00	12.60	0.65	0.82	0.98
	1800	52.00	15.20	0.63	0.79	0.94	49.50	14.50	0.64	0.81	0.97	47.00	13.80	0.66	0.83	0.99	44.00	12.90	0.67	0.86	1.00
71°F	1400	51.50	15.10	0.45	0.58	0.71	49.00	14.40	0.46	0.59	0.72	47.00	13.80	0.46	0.60	0.74	44.00	12.90	0.47	0.62	0.76
	1600	53.00	15.50	0.45	0.60	0.74	50.50	14.80	0.46	0.61	0.75	48.00	14.10	0.47	0.63	0.78	45.00	13.20	0.47	0.64	0.80
	1800	54.00	15.80	0.46	0.62	0.77	51.50	15.10	0.47	0.63	0.79	49.00	14.40	0.48	0.65	0.81	46.00	13.50	0.48	0.66	0.84

5 TON - LRP16GE60, LRP16GX60 (1ST STAGE)

Entering Wet Bulb Temperature	Total Air Volume	Outdoor Air Temperature Entering Outdoor Coil																			
		75°F					85°F					95°F					105°F				
		Total Cool Cap.	Comp. Motor Input	Sensible To Total Ratio (S/T) Dry Bulb			Total Cool Cap.	Comp. Motor Input	Sensible To Total Ratio (S/T) Dry Bulb			Total Cool Cap.	Comp. Motor Input	Sensible To Total Ratio (S/T) Dry Bulb			Total Cool Cap.	Comp. Motor Input	Sensible To Total Ratio (S/T) Dry Bulb		
	cfm	kBtuh	kW	75°F	80°F	85°F	kBtuh	kW	75°F	80°F	85°F	kBtuh	kW	75°F	80°F	85°F	kBtuh	kW	75°F	80°F	85°F
63°F	1130	45.50	13.30	0.73	0.85	0.97	43.50	12.70	0.74	0.87	0.99	41.50	12.20	0.75	0.89	1.00	39.00	11.40	0.77	0.92	1.00
	1260	47.00	13.80	0.74	0.88	1.00	45.00	13.20	0.76	0.90	1.00	42.50	12.50	0.78	0.92	1.00	40.00	11.70	0.80	0.96	1.00
	1390	48.00	14.10	0.77	0.91	1.00	46.00	13.50	0.78	0.93	1.00	43.50	12.70	0.80	0.96	1.00	40.50	11.90	0.82	0.99	1.00
67°F	1130	48.00	14.10	0.58	0.70	0.82	46.00	13.50	0.59	0.71	0.83	43.50	12.70	0.59	0.73	0.86	41.00	12.00	0.61	0.75	0.89
	1260	49.50	14.50	0.59	0.72	0.85	47.50	13.90	0.60	0.73	0.87	45.00	13.20	0.61	0.75	0.89	42.00	12.30	0.62	0.77	0.92
	1390	50.50	14.80	0.60	0.74	0.88	48.50	14.20	0.61	0.76	0.90	46.00	13.50	0.62	0.78	0.92	43.00	12.60	0.64	0.80	0.95
71°F	1130	50.50	14.80	0.44	0.56	0.68	48.50	14.20	0.44	0.57	0.69	46.00	13.50	0.45	0.58	0.70	43.00	12.60	0.46	0.59	0.72
	1260	52.00	15.20	0.45	0.58	0.70	50.00	14.70	0.45	0.58	0.71	47.00	13.80	0.45	0.60	0.73	44.50	13.00	0.46	0.61	0.75
	1390	53.00	15.50	0.45	0.59	0.72	51.00	14.90	0.45	0.60	0.73	48.50	14.20	0.46	0.61	0.75	45.50	13.30	0.47	0.63	0.78

5 TON - LRP16GE60, LRP16GX60 (2ND STAGE)

Entering Wet Bulb Temperature	Total Air Volume	Outdoor Air Temperature Entering Outdoor Coil																			
		85°F					95°F					105°F					115°F				
		Total Cool Cap.	Comp. Motor Input	Sensible To Total Ratio (S/T) Dry Bulb			Total Cool Cap.	Comp. Motor Input	Sensible To Total Ratio (S/T) Dry Bulb			Total Cool Cap.	Comp. Motor Input	Sensible To Total Ratio (S/T) Dry Bulb			Total Cool Cap.	Comp. Motor Input	Sensible To Total Ratio (S/T) Dry Bulb		
	cfm	kBtuh	kW	75°F	80°F	85°F	kBtuh	kW	75°F	80°F	85°F	kBtuh	kW	75°F	80°F	85°F	kBtuh	kW	75°F	80°F	85°F
63°F	1600	58.00	17.00	0.73	0.86	0.98	55.50	16.30	0.74	0.88	1.00	52.50	15.40	0.76	0.90	1.00	49.50	14.50	0.78	0.93	1.00
	1800	59.50	17.40	0.75	0.89	1.00	57.00	16.70	0.77	0.91	1.00	54.00	15.80	0.79	0.94	1.00	51.00	14.90	0.81	0.97	1.00
	1900	60.00	17.60	0.76	0.91	1.00	57.50	16.90	0.78	0.93	1.00	54.50	16.00	0.80	0.96	1.00	51.50	15.10	0.82	0.98	1.00
67°F	1600	61.00	17.90	0.58	0.71	0.83	58.00	17.00	0.59	0.72	0.85	55.50	16.30	0.60	0.74	0.87	52.00	15.20	0.61	0.76	0.89
	1800	62.50	18.30	0.60	0.73	0.86	59.50	17.40	0.60	0.75	0.88	56.50	16.60	0.62	0.76	0.91	53.50	15.70	0.63	0.78	0.94
	1900	63.00	18.50	0.60	0.74	0.88	60.50	17.70	0.61	0.76	0.90	57.50	16.90	0.63	0.78	0.92	54.00	15.80	0.64	0.80	0.96
71°F	1600	64.00	18.80	0.44	0.57	0.69	61.00	17.90	0.45	0.58	0.70	58.00	17.00	0.45	0.59	0.71	54.50	16.00	0.46	0.60	0.73
	1800	65.50	19.20	0.45	0.58	0.71	62.50	18.30	0.45	0.59	0.72	59.50	17.40	0.46	0.60	0.74	56.00	16.40	0.46	0.62	0.76
	1900	66.50	19.50	0.45	0.59	0.72	63.00	18.50	0.46	0.60	0.74	60.00	17.60	0.46	0.61	0.76	56.50	16.60	0.47	0.63	0.78

NOTE - Values based on 0.58 in. w.c. external static pressure.

BLOWER DATA

LRP16GE24, LRP16GX24 Blower Performance

0 through 0.80 in. w.g. External Static Pressure Range

"ADJUST" Jumper Setting	Blower Control Jumper Speed Positions											
	"COOL" Speed - cfm				"HEAT" Speed - cfm				"CONTINUOUS FAN" Speed - cfm			
	A	B	C	D	A	B	C	D	A	B	C	D
+	1100	880	660	440	1100	1000	900	815	550	440	330	220
NORM	1000	800	600	400	1100	1000	900	815	500	400	300	200
—	900	720	540	360	1100	1000	900	815	450	360	270	180

LRP16GE36, LRP16GX36 Blower Performance

0 through 0.80 in. w.g. External Static Pressure Range

"ADJUST" Jumper Setting	Blower Control Jumper Speed Positions											
	"COOL" Speed - cfm				"HEAT" Speed - cfm				"CONTINUOUS FAN" Speed - cfm			
	A	B	C	D	A	B	C	D	A	B	C	D
+	1540	1320	1100	880	1400	1200	1100	975	770	660	550	440
NORM	1400	1200	1000	800	1400	1200	1100	975	700	600	500	400
—	1260	1080	900	720	1400	1200	1100	975	630	540	450	360

LRP16GE48, LRP16GX48 Blower Performance

0 through 0.80 in. w.g. External Static Pressure Range

"ADJUST" Jumper Setting	Blower Control Jumper Speed Positions											
	"COOL" Speed - cfm				"HEAT" Speed - cfm				"CONTINUOUS FAN" Speed - cfm			
	A	B	C	D	A	B	C	D	A	B	C	D
+	1980	1760	1540	1320	1350	1200	1100	1000	990	880	770	660
NORM	1800	1600	1400	1200	1350	1200	1100	1000	900	800	700	600
—	1620	1440	1260	1080	1350	1200	1100	1000	810	720	630	540

LRP16GE60, LRP16GX60 Blower Performance

0 through 0.80 in. w.g. External Static Pressure Range

"ADJUST" Jumper Setting	Blower Control Jumper Speed Positions											
	"COOL" Speed - cfm				"HEAT" Speed - cfm				"CONTINUOUS FAN" Speed - cfm			
	A	B	C	D	A	B	C	D	A	B	C	D
+	2200	1980	1760	1540	1480	1380	1280	1180	1100	990	880	770
NORM	2000	1800	1600	1400	1480	1380	1280	1180	1000	900	800	700
—	1800	1620	1440	1260	1480	1380	1280	1180	900	810	720	630

NOTE - All air data is measured external to unit without air filters.

NOTE - 1st Stage airflow is 70% of 2nd Stage airflow (full capacity) in cooling mode. In heating mode, low stage airflow is optimized for a 40°F temperature rise.

BLOWER DATA

ACCESSORY AIR RESISTANCE DATA - in. w.g.

Air Volume cfm	Rectangular to Round Duct Adaptor Kits					
	Downflow		Horizontal			
	14 in. Diameter		14 in. Diameter		16 in. Diameter	18 in. Diameter
	24, 36	48, 60	24, 36	48, 60	48, 60	48, 60
500	0.03	- - -	0.04	- - -	- - -	- - -
600	0.05	- - -	0.07	- - -	- - -	- - -
700	0.08	0.13	0.08	0.13	- - -	- - -
800	0.10	0.17	0.12	0.16	- - -	- - -
900	0.12	0.21	0.15	0.21	- - -	- - -
1000	0.17	0.24	0.19	0.25	0.11	0.03
1100	0.18	0.30	0.23	0.30	0.11	0.03
1200	0.20	0.36	0.29	0.37	0.13	0.03
1300	0.26	0.43	0.31	0.43	0.17	0.03
1400	0.31	0.50	0.39	0.51	0.20	0.03
1500	- - -	0.57	- - -	0.57	0.21	0.05
1600	- - -	0.63	- - -	0.65	0.26	0.05
1700	- - -	0.71	- - -	0.72	0.30	0.06
1800	- - -	0.80	- - -	0.81	0.30	0.06
1900	- - -	0.91	- - -	0.90	0.40	0.06
2000	- - -	0.99	- - -	1.01	0.41	0.06

DIMENSIONS UNIT

Size	CORNER WEIGHTS								CENTER OF GRAVITY			
	AA		BB		CC		DD		EE		FF	
	lbs.	kg	lbs.	kg	lbs.	kg	lbs.	kg	in.	mm	in.	mm
24	102	46	103	47	110	50	110	50	23-1/4	591	21-3/4	552
36	105	48	106	48	113	51	113	51	23-1/4	591	21-3/4	552
48	129	59	130	59	139	63	138	63	27-1/2	699	21-3/4	552
60	138	63	138	63	148	67	148	67	27-1/2	699	21-3/4	552

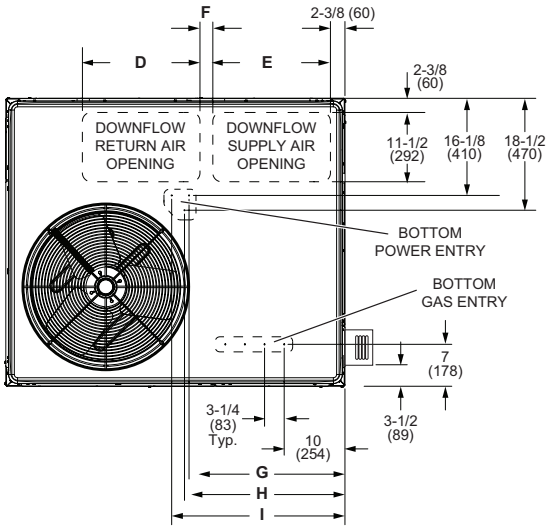

TOP VIEW (Base)

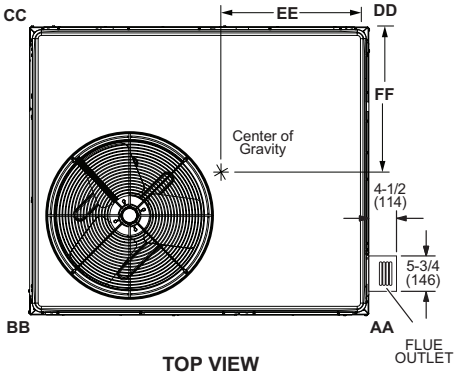

TOP VIEW
(Corner Weight and Center of Gravity)

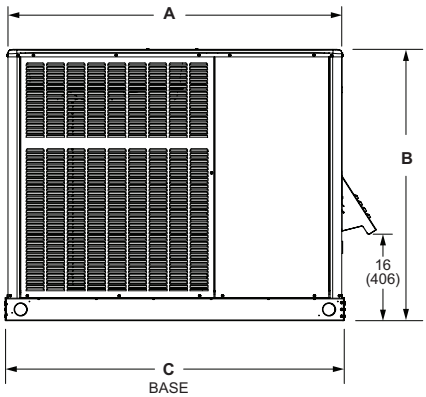

FRONT VIEW

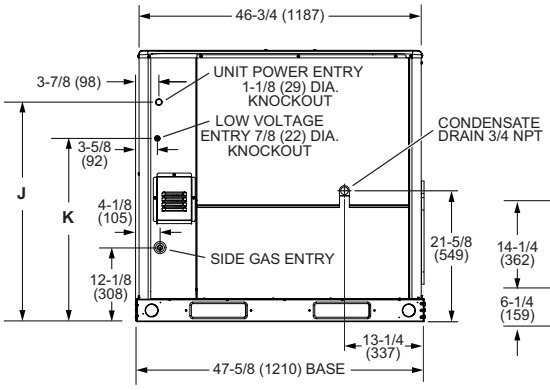

RIGHT SIDE VIEW

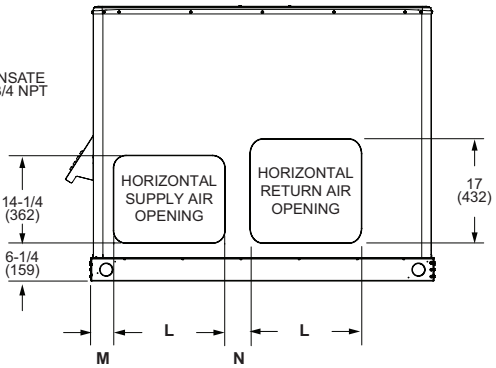

BACK VIEW

Size	A		B		C		D		E		F		G	
	in.	mm	in.	mm	in.	mm	in.	mm	in.	mm	in.	mm	in.	mm
24, 36	47-5/8	1210	40-7/8	1038	47-5/8	1210	16-3/4	425	14	356	2	51	20-1/4	514
48, 60	55-1/4	1403	44-7/8	1140	56-1/8	1426	19-1/2	495	19-1/2	495	2-1/8	54	25-7/8	657

Size	H		I		J		K		L		M		N	
	in.	mm	in.	mm	in.	mm	in.	mm	in.	mm	in.	mm	in.	mm
24, 36	21	533	23-1/4	591	32-1/4	819	26-1/4	667	13-1/2	343	3-1/8	79	5-7/8	149
48, 60	26-1/2	673	26-3/4	679	36-1/4	921	30-1/4	768	18-1/4	463	3-3/4	95	4-3/8	111

CLIP CURB

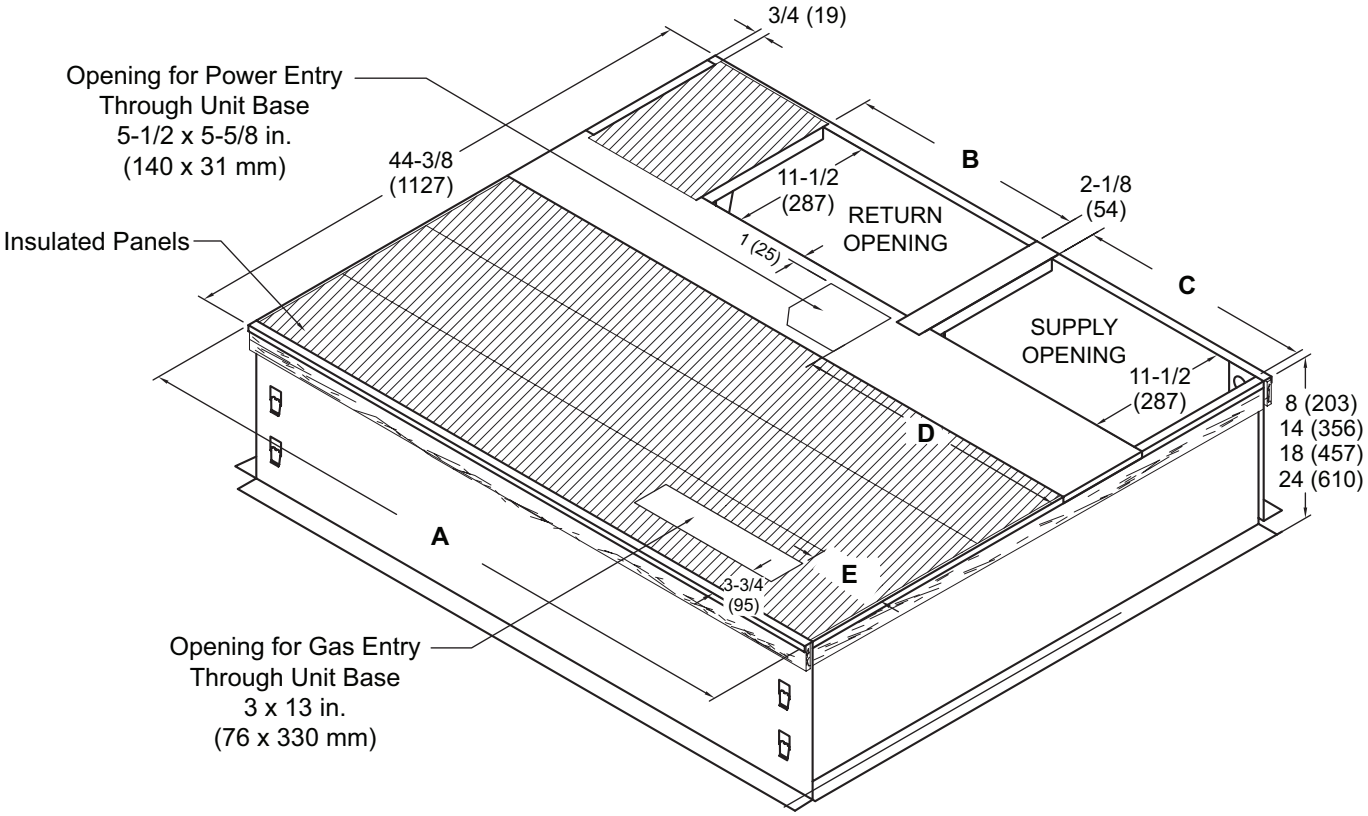

NOTE - Roof deck may be omitted within confines of curb.

TYPICAL FLASHING DETAIL FOR ROOF CURB

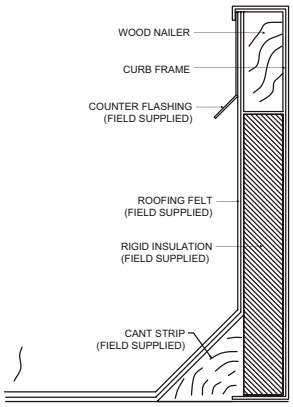

DETAIL ROOF CURB

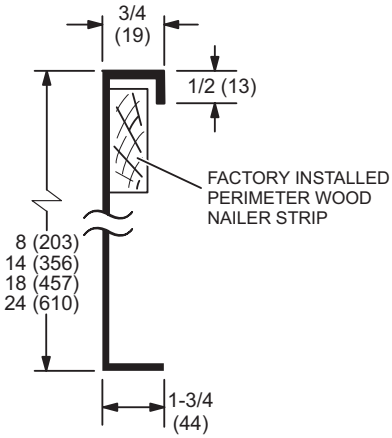

Usage	A		B		C		D		E	
	in.	mm	in.	mm	in.	mm	in.	mm	in.	mm
24, 36	44-3/8	1127	16-7/8	429	13-7/8	352	17-1/4	438	1-1/4	32
48, 60	52-7/8	1343	19-1/2	380	19-1/2	352	23-1/8	587	7	178

ADJUSTABLE PITCH ROOF WELDED CURB

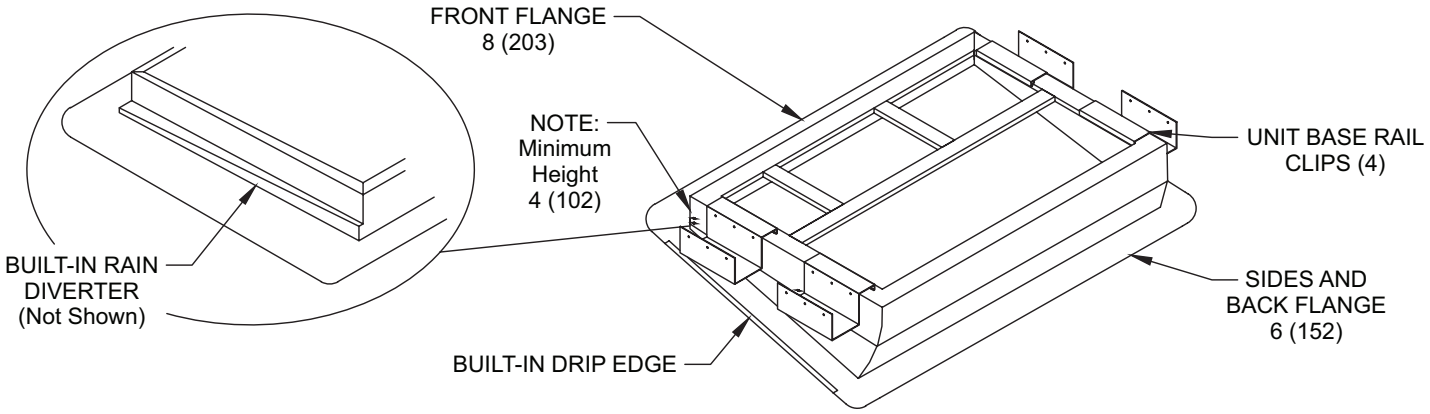

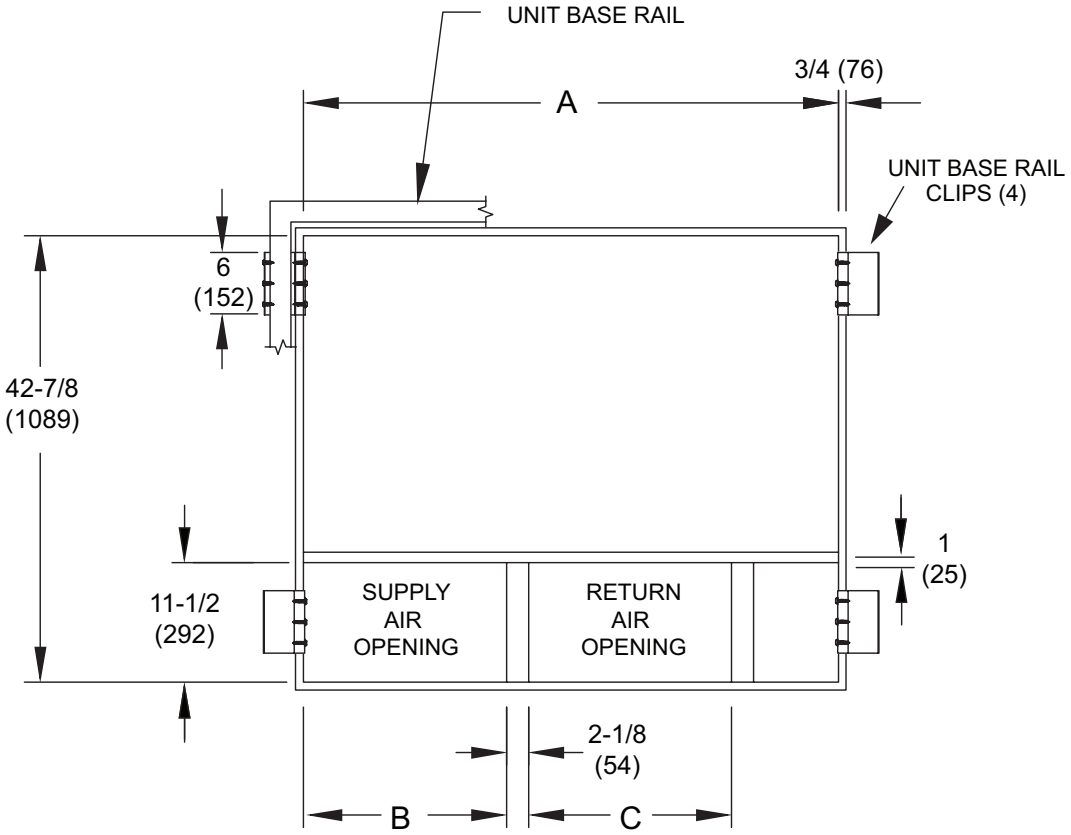

Usage	A		B		C	
	in.	mm	in.	mm	in.	mm
24, 36	42-7/8	1089	13-7/8	352	16-7/8	429
48, 60	51-3/8	1305	19-1/2	495	19-1/2	495

ADJUSTABLE PITCH ROOF CLIP CURB

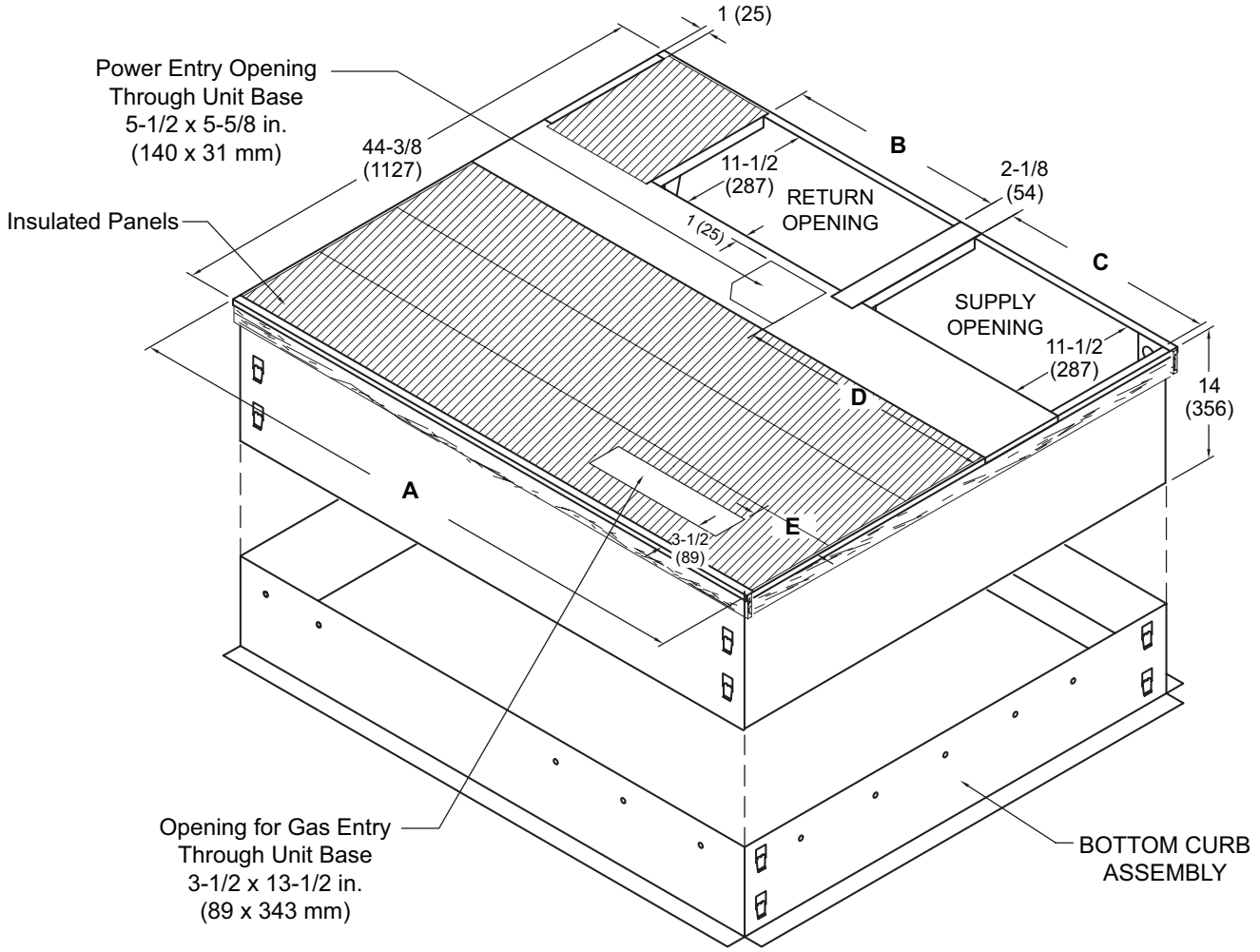

NOTE - Roof deck may be omitted within confines of curb.

TYPICAL FLASHING DETAIL FOR ROOF CURB

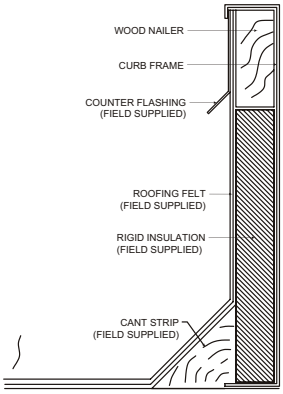

DETAIL ROOF CURB

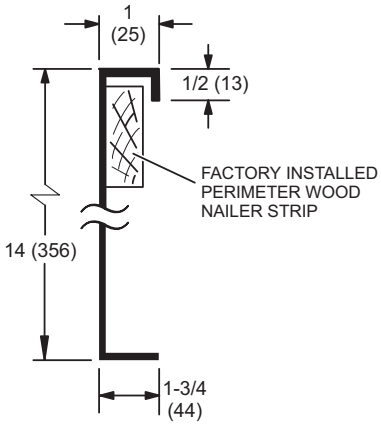

Usage	A		B		C		D		E	
	in.	mm	in.	mm	in.	mm	in.	mm	in.	mm
24, 36	44-3/8	1127	16-7/8	429	13-7/8	352	17-1/4	438	1-1/4	32
48, 60	52-7/8	1343	19-1/2	380	19-1/2	352	23-1/8	587	7	178

REVISIONS

Sections	Description of Change
Approvals and Warranty	Updated Approvals for California only rules.

Visit us at www.Lennox.com
For the latest technical information, www.LennoxPros.com
Contact us at 1-800-9-LENNOX

NOTE - Due to Lennox' ongoing commitment to quality, Specifications, Ratings and Dimensions subject to change without notice and without incurring liability.
Improper installation, adjustment, alteration, service or maintenance can cause property damage or personal injury.
Installation and service must be performed by a qualified installer and servicing agency.

©2024 Lennox Industries, Inc.