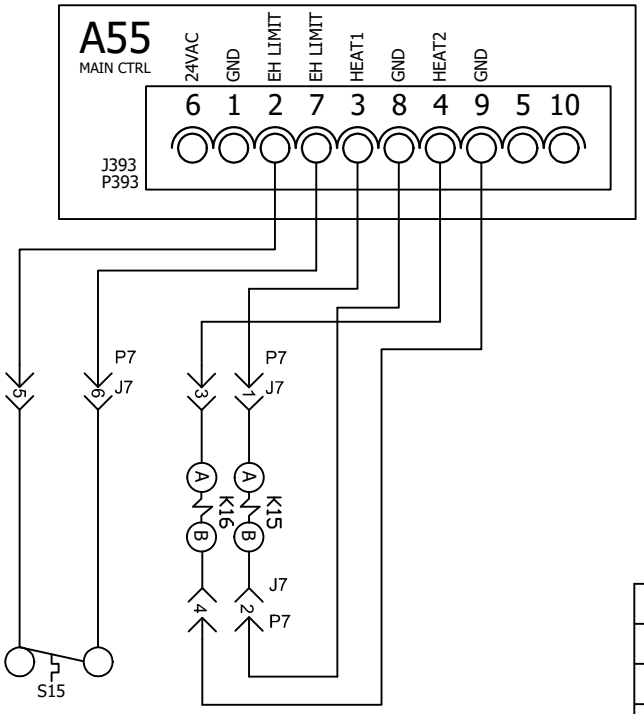

KEY	DESCRIPTION
A55	CONTROL, BOARD LENNOX
CB10	CIRCUIT BREAKER, MAIN DISCONNECT
F3	FUSE, ELECTRIC HEAT 1, 2
F42	FUSE, ELECTRIC HEAT 3, 4
F4	FUSE, UNIT
HE1	ELEMENT, ELECTRIC HEAT 1
HE2	ELEMENT, ELECTRIC HEAT 2
HE3	ELEMENT, ELECTRIC HEAT 3
HE4	ELEMENT, ELECTRIC HEAT 4
J7	JACK, ELECTRIC HEAT SUB-BASE KIT
K15,-1	CONTACTOR, ELECTRIC HEAT 1,2
K16,-1	CONTACTOR, ELECTRIC HEAT 1A,2A
P7	PLUG, ELECTRIC HEAT SUB-BASE KIT
S15	SWITCH, LIMIT PRIMARY ELECTRIC HEAT
S20	SWITCH, LIMIT SECONDARY ELECTRIC HEAT 1,2
S158	SWITCH, LIMIT SECONDARY ELECTRIC HEAT 2A
TB3	TERMINAL STRIP, ELECTRIC HEAT

KW	HE1	HE2	HE3	HE4
40	10	10	10	10
45	15		15	15
60	15	15	15	15

DESIGNATION	VOLTAGE
G	460/60/3
J	575/60/3

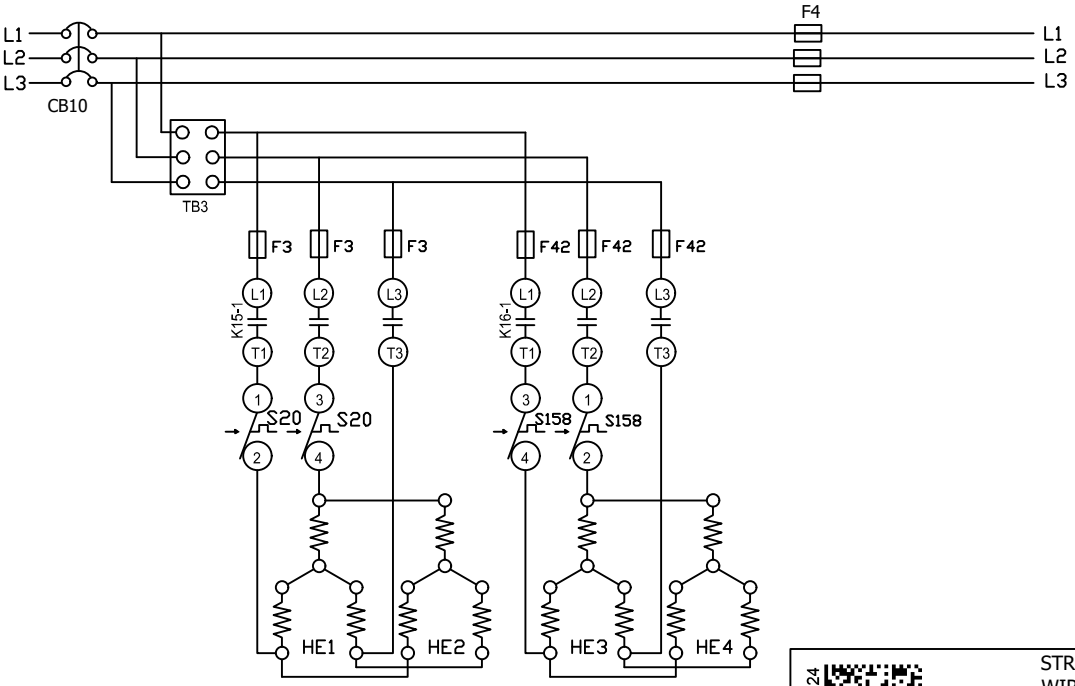

DENOTES OPTIONAL COMPONENTS

1024 538473-01	STRATEGOS WIRING DIAGRAM 538473-01	10/24
HEATING		
ELECTRIC HEAT FOR STRATEGOS™ EHA/EHB - 40,45,60 - G & 45,60 - J		
SECTION A		REV 0
Supersedes 537475-01	New Form No. 538473-01	

© 2024 Lennox Commercial

7X10 CUT SIZE

REV	EC NO.	DATE	BY	APVD	REVISION NOTE
000	CN-012122B	05/08/2024	LK	AXL	ORIGINATED AT PD&R CARROLLTON, TX