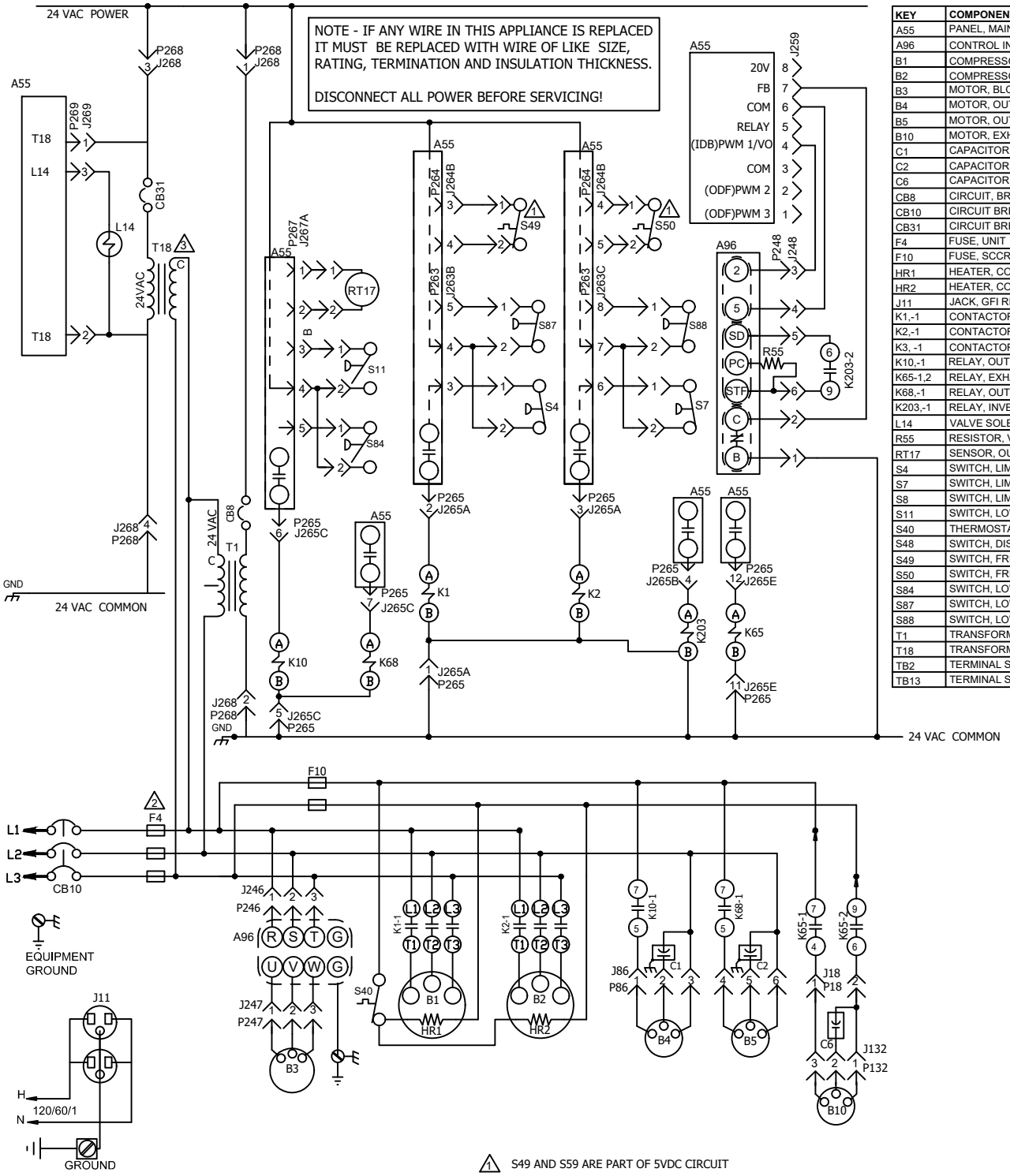

KEY	COMPONENT
A55	PANEL, MAIN
A96	CONTROL INVERTER
B1	COMPRESSOR 1
B2	COMPRESSOR 2
B3	MOTOR, BLOWER
B4	MOTOR, OUTDOOR FAN 1
B5	MOTOR, OUTDOOR FAN 2
B10	MOTOR, EXHAUST FAN
C1	CAPACITOR, OUTDOOR FAN 1
C2	CAPACITOR, OUTDOOR FAN 2
C6	CAPACITOR, EXHAUST FAN
CB8	CIRCUIT, BREAKER, TRANSFORMER T1
CB10	CIRCUIT BREAKER, MAIN DISCONNECT, UNIT
CB31	CIRCUIT BREAKER, TRANSFORMER T18
F4	FUSE, UNIT
F10	FUSE, SCCR
HR1	HEATER, COMPRESSOR 1
HR2	HEATER, COMPRESSOR 2
J11	JACK, GFI RECEPTICLE
K1,-1	CONTACTOR, COMPRESSOR 1
K2,-1	CONTACTOR, COMPRESSOR 2
K3, -1	CONTACTOR, BLOWER
K10,-1	RELAY, OUTDOOR FAN 1
K65-1,2	RELAY, EXHAUST FAN
K68,-1	RELAY, OUTDOOR FAN 2
K203,-1	RELAY, INVERTER START/RUN
L14	VALVE SOLENOID, REHEAT
R55	RESISTOR, VFD LOADING, A96
RT17	SENSOR, OUTSIDE AIR TEMPERATURE
S4	SWITCH, LIMIT HI PRESS COMP 1
S7	SWITCH, LIMIT HI PRESS COMPRESS 2
S8	SWITCH, LIMIT HI TEMP COMPRESSOR 2
S11	SWITCH, LOW PRESS, LOW AMBIENT KIT COMP 1
S40	THERMOSTAT, CRANKCASE
S48	SWITCH, DISCONNECT
S49	SWITCH, FREEZESTAT COMP 1
S50	SWITCH, FREEZESTAT COMP 2
S84	SWITCH, LOW PRESS, LOW AMBIENT KIT COMP 2
S87	SWITCH, LOW PRESS, COMPRESSOR 1
S88	SWITCH, LOW PRESS, COMPRESSOR 2
T1	TRANSFORMER, CONTROL
T18	TRANSFORMER, PHASE MONITOR
TB2	TERMINAL STRIP, UNIT
TB13	TERMINAL STRIP, POWER DISTRIBUTION

1. S49 AND S59 ARE PART OF 5VDC CIRCUIT
2. USED ON SCC UNITS WITH ELECTRIC HEAT ONLY
3. MOVE WIRE FROM 240 TO 208 TAP ON T1 AND T18 TRANSFORMERS FOR 208 LINE VOLTAGE APPLICATIONS

DENOTES OPTIONAL COMPONENTS
LINE VOLTAGE FIELD INSTALLED

J/P	JACK/PLUG DESCRIPTION
18	POWER, EXHAUST FAN
86	POWER, OUTDOOR FAN INTERFACE
132	POWER, EXHAUST FAN MOTOR
194	GP CONTROL INPUT/OUTPUT
246	POWER TO VFD
247	POWER, VFD TO MOTOR
248	VFD CONTROL
259	BLOWER EC MOTOR
263	HIGH AND LOW PRESSURE SWITCHES
264	BLOWER DECK
265	CONTACTORS AND RELAYS
267	OUTDOOR FAN AREA
268	TRANFORMER T1 POWER
269	HUMIDITROL

120 V FIELD PROVIDED POWER SUPPLY IS REQUIRED

NOTE: USE COPPER CONDUCTORS ONLY

2023/08

STRATEGOS B-BOX WIRING DIAGRAM
538351-01

8/23

COOLING -MSAV NO BYPASS

SCH/SGH - 120 - G, J, Y

SECTION B

REV 0

Supersedes

New Form No.
538351-01