GAS FURNACES

EL280UHE

ELITE® SERIES

Upflow / Horizontal - Two-Stage Heat - Constant Torque Blower - 60 Hz

RESIDENTIAL PRODUCT SPECIFICATIONS

Bulletin No. 210871
July 2024
Supersedes all previous versions

ELITE® SERIES

AFUE - 80%
Input - 44,000 to 110,000 Btuh
Nominal Add-on Cooling - 1.5 to 5 Tons

MODEL NUMBER IDENTIFICATION

EL 2 80 UH 090 X E 48 B

Unit Type
EL = Elite® Series

Stages
2 = Two-Stage

AFUE
80 = 80%

Configuration
UH = Upflow/Horizontal

Nominal Gas Heat Input
045 = 44,000 Btuh
070 = 66,000 Btuh
090 = 88,000 Btuh
110 = 110,000 Btuh

Low NOx
X = Units meet California Nitrogen Oxides Standard (40ng/J)

Blower
E = High Efficiency Constant Torque Blower Motor

Nominal Add-On Cooling Capacity
36 = 1.5-3.5 tons
48 = 3-4 tons
60 = 4-5 tons

[1] **Cabinet Width**
A = 14-1/2 in.
B = 17-1/2 in.
C = 21 in.

[1] Indoor coils with the same letter designation will physically match the furnace.

FEATURE HIGHLIGHTS

1. Lennox Duralok™ Heat Exchanger
2. Inshot Burners
3. SureLight® Hot Surface Ignitor
4. Two-Stage Gas Control Valve
5. Two-Speed Combustion Air Inducer
6. Flame Rollout Switches
7. SureLight® Integrated Furnace Control
8. Power Saver™ Constant Torque Blower
9. Insulated Cabinet
10. Safety Interlock Switch
11. Gas Piping And Electrical Inlets

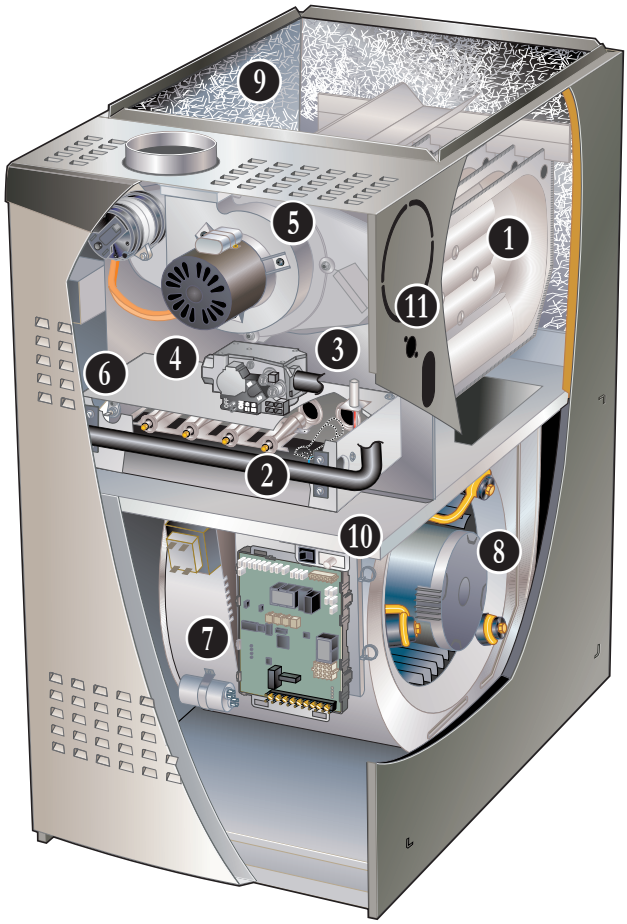

NOTE - EL280UHE FURNACES ARE NOT AVAILABLE IN CANADA!

CONTENTS

Blower Data 16
Approvals And Warranty 3
Dimensions 12
- Furnace/Coil Combined Dimensions 15
- Optional Accessories 14
- Unit - Horizontal Position 13
- Unit - Upflow Position 12
Features 3
Gas Heat Accessories - Order Separately. 11
High Altitude Derate 11
Installation Clearances 8
Model Number Identification. 1
Optional Accessories - Order Separately 11
Specifications 9

APPROVALS AND WARRANTY

APPROVALS

- AHRI Certified
- CSA International Certified
- Tested and rated according to US DOE test procedures and FTC labeling regulations
- ISO 9001 Registered Manufacturing Quality System
- Blower data from unit tests conducted in Lennox Laboratory air test chamber

NOTE - This furnace has not been CSA International design certified for installation in mobile homes, recreational vehicles, or outdoors.

California Only

- These furnaces **do not meet** the South Coast Air Quality Management District (SCAQMD) Rule 1111 and San Joaquin Valley Air Pollution Control District (SJVAPCD) Rule 4905 NOx emission limit (14 ng/J) and cannot be installed within the SCAQMD and SJVAPCD areas
- All "X" model furnaces are approved by the California Energy Commission and meets California Nitrogen Oxides Standard (NOx) limits of 40 ng/J

WARRANTY

- Duralok™ Aluminized Steel Heat Exchanger:
  - Limited twenty years in residential applications
  - Limited ten years in non-residential applications
- All other covered components:
  - Limited five years in residential installations
  - Limited one year in non-residential installations

NOTE - Refer to Lennox® Basic Limited Warranty at www.Lennox.com for additional details.

FEATURES

APPLICATIONS

- Input capacities of 44,000, 66,000, 88,000 and 110,000 Btuh
- Energy efficiency (AFUE) - 80%
- Compact cabinet for upflow, horizontal-left or horizontal-right applications
- Lennox add-on indoor coils, high-efficiency air cleaners and humidifiers can easily be added to furnace
- Shipped factory assembled with all controls installed and wired
- Ready for installation in upflow or horizontal right-hand position without any modifications

NOTE - Horizontal left-hand requires repositioning of pressure switch.

- Removable bottom seal panel shipped in place for side return air is easily removed for bottom/end return air applications
- Each unit factory test operated to ensure proper operation

HEATING SYSTEM

1 Lennox Duralok™ Heat Exchanger Assembly

- Heavy gauge aluminized steel heat exchanger
- Crimped seam clamshell type design
- Designed for normal expansion and contraction
- Minimum resistance to air flow
- Laboratory life cycle tested in excess of industry standards
- Compact size of heat permits low overall design of furnace cabinet

2 Inshot Burners

- Aluminized steel inshot burners provide efficient, trouble-free operation
- Burner venturi mixes air and gas in correct proportion for proper combustion
- Burner assembly is removable from the unit as a single component for ease of service

3 SureLight® Hot Surface Ignitor

- Tough, reliable, long-life, trouble-free performance
- Silicon nitride ignitor
- Cemented to steatite block for protection against current leakage
- Ignition leads constructed of nickel plated copper enclosed in high temperature Teflon® insulation for dependable operation

4 Two-Stage Gas Control Valve

- 24 volt redundant combination two-stage gas control valve combines manual shut off switch (On-Off), automatic electric valve (dual) and gas pressure regulation into a compact combination control

HEATING SYSTEM (continued)

5 Two-Speed Combustion Air Inducer

- Heavy duty, permanent split capacitor (PSC) two-speed blower prepurges heat exchanger and safely vents flue products
- Dual pressure switches (low fire/high fire) prove blower operation before allowing gas valve to open
- Operates only during heating cycle
- Direct access allows inducer assembly to be rotated 90° clockwise or counterclockwise to facilitate easy vent attachment

6 Flame Rollout Switches (2)

- Factory installed on burner box
- Switch provides protection from abnormal operating conditions
- Manual reset

Limit Controls

- Primary limit factory installed on vestibule panel
- Secondary limit factory installed on blower housing
- Automatic reset

Optional Accessories

High Altitude Pressure Switch Kit

- Required on most units for proper unit operation at altitudes from 4501 to 10,000 ft.

Natural Gas to LPG/Propane Conversion Kit

- Required for field changeover from natural gas to LPG/Propane

LPG/Propane to Natural Gas Conversion Kit

- Required for field changeover from LPG/Propane to natural gas

Vent Adaptor (Upflow Applications Only)

- Allows venting through a masonry chimney without the need of a flue liner
- Manual reset temperature sensor protects against abnormal operating conditions
- Sensor wiring may be routed from either side of adaptor
- Minimum winter design temperatures:
  - −10°F when used with interior masonry chimneys.
  - +5°F when used with exterior masonry chimneys

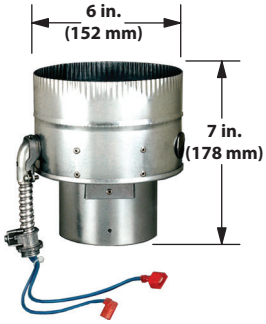

NOTE - Refer to Winter Design Temperatures Map on 8 for application information. Also refer to the installation instructions for detailed information.

BLOWER

- Direct drive blower
- Statically and dynamically balanced
- Resiliently mounted
- Blower assembly easily removed for servicing

7 Power Saver™ Constant Torque Blower Motor

- DC Brushless Motor
- High Efficiency Constant Torque
- ECM (Electronically Commutated Motor)
- Motor is programmed to provide constant torque at each of the selectable speeds
- Motor is controlled by the Integrated Furnace Control
- Blower speeds are easily changed on the integrated furnace control
- See blower data tables

CONTROLS

8 SureLight® Integrated Two-Stage Furnace Control Board

- Contains all necessary controls and relays to operate furnace
- Combustion air inducer is operated by the integrated furnace control
- Prior to ignition, a pre-purge cycle for 15 seconds is initiated
- After the main burners are turned off, a post-purge cycle for 5 seconds is run
- Flame sensor assures safe and reliable operation
- Should loss of flame occur the integrated furnace control will initiate 4 re-attempts at ignition before locking out unit operation for 60 minutes
- Watchguard type circuit automatically resets ignition controls after one hour of continuous thermostat demand after unit lockout, eliminating nuisance calls for service
- Jumper settings for single or two stage thermostat operation
- Two selectable 2nd stage recognition times (10 and 15 minutes) are available on the board when the furnace is used with a single stage thermostat
- When used with a two stage thermostat, furnace will only initiate second stage operation with a second stage thermostat demand
- Fan control consists of adjustable blower timed-off delay (60, 90, 120, 180 seconds - factory setting 90 seconds) and fixed blower timed-on delay (30 seconds heating, 2 seconds cooling)
- For air-conditioning applications, blower is automatically energized on thermostat demand for cooling
- Two accessory terminals furnished for additional power supply requirements for 120 volt (less than 1 amp) power humidifiers and powered air cleaners
- A separate 24V accessory terminal is also provided for low voltage accessories

FEATURES

- **Display LED** - Seven segment LED displays alphanumeric information to diagnostics as well as system operation and status
  - Diagnostic codes are held in non-volatile memory, immune from power interruptions
  - Holds up to ten diagnostic codes in order of occurence for recall on demand

CONTROLS (continued)

24 Volt Transformer (40VA)
- Furnished and factory installed on outside of control box
- Circuit breaker (furnished) is wired in series

Field Wiring Make-Up Box
- Furnished for line voltage wiring
- Factory installed internally on left side of furnace
- Box may be installed internally on right side of furnace

Optional Accessories

E30 Smart Wi-Fi Thermostat
- Wi-Fi enabled, electronic 7-day, universal, multi-stage, programmable, touchscreen thermostat
- 3 Heat/2 Cool
- Auto-changeover
- Controls dehumidification during cooling mode and humidification during heating mode

- Offers enhanced capabilities including humidification / dehumidification / dewpoint measurement and control, Humiditrol® control, and equipment maintenance reminders
- Easy to read 7 in. color touchscreen (measured diagonally)
- LCD display with backlight shows the current and set temperature, time, inside relative humidity, system status (operating mode and schedules) and outside temperature (optional outdoor sensor required)
- Smooth Setback Recovery starts system early to achieve setpoint at start of program period
- Compressor short-cycle protection (5 minutes)
- Up to four separate schedules are available plus Schedule IQ™
- One-Touch Away Mode - A quick and easy way to set the cooling and heating setpoints while away
- Smart Away™ - Uses geo-fencing technology to determine when the homeowner is within a predetermined distance from the home to operate the system when leaving, away and arriving
- Wi-Fi remote monitoring and adjustment through a home wireless network for desktop PCs, laptops and apps for smartphones or tablets
- Smart home automation compatible with Apple HomeKit™, Amazon Alexa®, Google Assistant and IFTTT
- Service Dashboard features online real-time monitoring of installed Lennox® Communicating thermostats
- High Definition Color Display with Subbase, Smart Hub Controller, wallplate (for retrofit installations) furnished for easy installation
- See the Lennox® E30 Smart Wi-Fi Thermostat Product Specifications bulletin for more information

Remote Outdoor Temperature Sensor
- Used with the Lennox® E30 Smart Thermostat
- When installed outdoors, sensor allows thermostat to display outdoor temperature

NOTE - Sensor is required for Enhanced Dehumidification Control (EDA) applications.

NOTE - The outdoor sensor is furnished as standard with Lennox® Communicating outdoor units, optional for conventional units.

Thermostat
- Thermostat is not furnished with unit
- See Lennox Price Book for selection

Furnace Twinning Panel
- Required to operate two identical furnaces simultaneously from a single thermostat
- For single stage conventional (1 heat/1 cool), multi-stage conventional (2 heat/2 cool) and heat pump (3 heat/2 cool) equipment
- Can be used with common or separate ducted systems
- Contains PC Control Board with terminal strip connections for thermostat and HVAC equipment
- LEDs indicate system operating status
- Uses standard 18-gauge thermostat wire
- Power Supply: 24 VAC, 40VA (transformer not furnished)
- Mounting base with hardware furnished
- Dimensions (H x W x D): 10 x 5 x 2 in.

NOTE - Only identical furnaces should be twinned in order to ensure that both furnace blowers start at the same time. If furnaces are not identical, back draft dampers can be installed in either the supply or return duct.

Up to four identical furnaces can be twinned. Requires two panels that are wired together.

Furnace Twinning Kit
- Required to operate two furnaces simultaneously.
- Kit consists of twinning relays, quick connect terminals and mounting hardware
- Used for two-stage heating/single-stage cooling with either a single-stage or two-stage thermostat

Transformer (75VA)
- Recommended when furnace is used with zoning or defrost thermostats and other 24V accessories requiring a higher VA rating
- Circuit breaker (furnished) is wired in series
- Replaces the standard 40VA transformer

FEATURES

CABINET

- Low-profile, narrow width cabinet allows easy installation
- Heavy-gauge, cold rolled steel construction
- Pre-painted finish
- Flue outlet on top of cabinet for upflow applications, can be relocated to either side of cabinet for horizontal applications
- Flanges provided on supply air opening for ease of plenum connection or alignment with indoor coil
- 9 Insulated with foil faced insulation on sides and back of heating compartment and mat faced insulation in blower compartment
- Sealed blower compartment
- Inner blower compartment access panel seals blower compartment from air leakage
- Cabinet door can be removed without any tools
- Complete service access
- 10 Safety interlock switch automatically shuts off power to unit when inner blower compartment access panel is removed
- 11 Gas piping and electrical inlets are provided in both sides of cabinet

Low Leakage Cabinet

- All models have less than 2% air leakage and meet ANSI/ASHRAE Standard 193-2010 "Method of Test for Determining the Air Tightness of HVAC Equipment"

Bottom/Side Return Air Entry:

- Upflow/horizontal with bottom return air entry:
  - Remove furnished bottom seal panel from cabinet
- Upflow only with side return-air entry:
  - Corners are marked on either side of cabinet for return air cut-out
- See dimension drawings

NOTE - 60C size units that require air volumes over 1800 cfm must have one of the following:

- Single side return air and Optional Return Air Base with transition that must accommodate required 20 x 25 x 1 inch air filter to maintain proper velocity
- Bottom return air
- Return air from both sides
- Bottom and one side return air
- See Blower Data Tables for additional information

Coil Match-Up

- All furnaces exactly match Lennox cased upflow indoor coils and horizontal indoor coils with same letter designation (A, B, C, D) in model number
- No adaptor required
- Engaging holes furnished on cabinet for alignment
- Lennox uncased coils match furnaces without any overhang but require an optional adaptor base or field fabricated transition to match furnace opening
- See coil bulletin for additional information

Optional Accessories

Horizontal Suspension Kit

- Provides suspension of unit and indoor coil in horizontal applications
- Allows complete service access
- Consists of corner mounted hanging brackets with vibration isolators, return air end support rail and hardware for assembly
- Metal hanging straps must be field provided

Return Air Base

- A field fabricated transition or Return Air Base is required when using an IAQ product higher than 14-3/16 in. installed next to the unit and serviced from the front. IAQ products higher than 20 in. require a field fabricated transition
- Base must be used for 60C models with air volumes over 1800 cfm in upflow applications when only one side return is required
- Cabinet is shipped flat for easy field assembly and is pre-painted steel to match the furnace. See Dimension Drawing

High Performance Economizer
(Commercial Applications Only)

- Designed for applications requiring outdoor air to be utilized in a commercial HVAC system. Allows the entry of fresh outdoor air for free cooling, reducing the requirement for mechanical cooling
- Heavy gauge galvanized steel cabinet lined with thick fiberglass insulation
- Mixed air sensor, outdoor air sensor and 24VAC transformer furnished
- Approved for California Title 24 building standards.
- ASHRAE 90.1-2010 compliant
- See separate Product Specifications bulletin for additional information and available control and sensor options

FEATURES

FILTER (not furnished)

- Filter and provisions for external mounting must be field provided

Optional Accessories

Air Filter and Rack Kit for Horizontal Return Air (End) Applications

- Washable or vacuum cleanable polyurethane frame type filter and external end return air rack available for field installation
- Rack has filter door for easy filter servicing
- Flanges on rack allow easy duct connection
- See dimension drawing

Air Filter and Rack Kit for Upflow Side Return Air

- Applications - Not for use with Return Air Base
- Washable or vacuum cleanable polyurethane frame type filter and external side return air rack available for field installation
- Available in single and ten pack kits
- Rack has filter door for easy filter servicing
- Flanges on rack allow easy duct connection
- Field installs on either side of unit cabinet (See dimension drawing)

REFRIGERATION DETECTION SYSTEM (RDS)

Optional Accessories

Refrigerant Detection System (RDS) Coil Sensor Kit

- Complies with UL 60335-2-40 approved standard
- Required for field installation for all systems using R-454B refrigerant if sensor is not furnished with coil
- Consists of Refrigerant Detection System (RDS) sensor, lineset sleeves, mounting brackets and A2L labeling
- Sensor ensures safe operation for systems equipped with R-454B refrigerant
- Sensor will detect anu R-454B refrigerant

Refrigerant Detection System (RDS) Blower Control Board

Communicating Blower Control Board (Universal)

- Communicating Blower Control Board and Sensor can be used universally with any Lennox® communicating furnace or any non-communicating 24 volt furnace

Non-Communicating Blower Control Board

- Non-Communicating Blower Control Board and Sensor can be used with any non-communicating 24 volt furnace

Standard Features

- Complies with UL 60335-2-40 approved standard
- Required for all systems using R-454B refrigerant
- Connects to the RDS sensor furnished with the RDS Coil Sensor Kit
- Supports up to two RDS Sensors (factory setting)
- Used as an interface between indoor unit and thermostat to control system
- Ensures safe operation for systems equipped with R-454B refrigerant
- If R-454B refrigerant is detected, the refrigerant detection system will stop compressor and/or heating operating and operate the blower to reduce concentrations in the conditioned space
- Once safe levels are reached the HVAC system will resume normal operation
- Multi-color LED for system status and as an aid in troubleshooting
  - Flashing LED codes for system status (Green/Blue) and diagnosing Sensor errors (Red)
- Alarm relay can trigger an external alarm if R-454B refrigerant is detected
- Zone relay opens all zone dampers (if part of a zoning system) if R-454B refrigerant is detected
- Power is disabled to non-communicating thermostats to prevent demand if R-454B refrigerant is detected
- On system start-up blower will run for five minutes and any thermostat demands are disabled
- Dimensions (H x W x D): 7-7/16 x 7-7/16 x 2-1/2 (189 x 189 x 127 mm)

NOTE - See Refrigerant Detection System (RDS) Components Table on page 12.

See the CK40 Indoor Coil Product Specifications bulletins for more information.

Refer to the Installation Instructions for additional information.

99% WINTER DESIGN TEMPERATURES FOR THE CONTIGUOUS UNITED STATES

This map is a necessarily generalized guide to temperatures in the contiguous Unites States. Temperatures shown for areas such as mountainous regions and large urban centers may not be accurate. The data used to develop this map was taken from the 1993 ASHRAE Fundamentals Handbook (Chapter 24, Table 1: Climate Conditions for the United States).

Reprinted with permission from NFPA 54: National Fuel Gas Code 1999, National Fire Protection Association, Quincy, MA 02269. This reprinted material is not the complete and official position of the National Fire Protection Association on the referenced subject, which is represented only by the standard in its entirety.

INSTALLATION CLEARANCES

UPFLOW POSITION

Vent Type	Type B1	Type C
Sides	0 (0)	[1] 0 (0)
Rear	0 (0)	0 (0)
Top	1 (25)	1 (25)
Front	2-1/4 (57)	2-1/4 (57)
Front (service/alcove)	24 (610)	24 (610)
Floor	Combustible	Combustible
Flue	1 (25)	6 (152)

NOTE − Air for combustion must conform to the methods outlined in the National Fuel Gas Code (NFPA 54/ANSI-Z223.1).

NOTE − In the U.S. flue sizing must conform to the methods outlined in the current National Fuel Gas Code (NFPA 54/ANSI-Z223.1) or applicable provisions of local building codes.

[1] Left side requires 4 in. if single wall vent is used on 14-1/2 in. “A” width cabinets, 2 in. on 17-1/2 in. “B” width cabinets.

HORIZONTAL POSITION

Vent Type	Type B1	Type C
End	[1] 2	[1] 2
Rear	0 (0)	0 (0)
Top	[1] 0 (0)	[1] 0 (0)
Front	2-1/4 (57)	2-1/4 (57)
Front (service)	24 (610)	24 (610)
Floor	Combustible	Combustible
Flue	1 (25)	6 (152)

NOTE − Air for combustion must conform to the methods outlined in the National Fuel Gas Code (NFPA 54/ANSI-Z223.1).

NOTE − In the U.S. flue sizing must conform to the methods outlined in the current National Fuel Gas Code (NFPA 54/ANSI-Z223.1) or applicable provisions of local building codes.

[1] Line contact installation permissible between jacket top or sides and building joists.

SPECIFICATIONS

Gas Heating Performance		**Model No.**	**EL280UH045E36A**	**EL280UH070E36A**
		Model No. - Low NOx	**- - -**	**EL280UH070XE36A**
		[1] AFUE	80%	80%
	High Fire	Input - Btuh	44,000	66,000
		Output - Btuh	35,000	54,000
		Temperature rise range - °F	30 - 60	30 - 60
		Gas Manifold Pressure (in. w.g.) Nat. Gas / LPG/Propane	3.5 / 10.0	3.5 / 10.0
	Low Fire	Input - Btuh	29,000	43,000
		Output - Btuh	23,000	35,000
		Temperature rise range - °F	20 - 50	20 - 50
		Gas Manifold Pressure (in. w.g.) Nat. Gas / LPG/Propane	1.7 / 4.5	1.7 / 4.5
High static - in. w.g.		Heating	0.5	0.5
		Cooling	0.5	0.5
Connections in.		Flue connection − in. round	4	4
		Gas pipe size IPS	1/2	1/2
Indoor Blower		Wheel nominal diameter x width - in.	10 x 8	10 x 8
		Motor output - hp	1/2	1/2
		Tons of add-on cooling	1.5 - 3.5	2 - 3.5
		Air Volume Range - cfm	250 - 1500	350 - 1375
Electrical Data		Voltage	120 volts - 60 hertz - 1 phase	
		Blower motor full load amps	6.1	6.1
		Maximum overcurrent protection	15	15
Shipping Data		lbs. - 1 package	111	121

NOTE - Filters and provisions for mounting are not furnished and must be field provided.

[1] Annual Fuel Utilization Efficiency based on DOE test procedures and according to FTC labeling regulations. Isolated combustion system rating for non-weatherized furnaces.

SPECIFICATIONS

Gas Heating Performance		**Model No.**	**EL280UH090E36B**	**EL280UH090E48B**
		Model No. - Low NOx	**- - -**	**EL280UH090XE48B**
		[1] AFUE	80%	80%
	High Fire	Input - Btuh	88,000	88,000
		Output - Btuh	71,000	72,000
		Temperature rise range - °F	35 - 65	30 - 60
		Gas Manifold Pressure (in. w.g.) Nat. Gas / LPG/Propane	3.5 / 10.0	3.5 / 10.0
	Low Fire	Input - Btuh	57,000	57,000
		Output - Btuh	47,000	46,000
		Temperature rise range - °F	25 - 55	20 - 50
		Gas Manifold Pressure (in. w.g.) Nat. Gas / LPG/Propane	1.7 / 4.5	1.7 / 4.5
High static - in. w.g.		Heating	0.5	0.5
		Cooling	0.5	0.5
Connections in.		Flue connection − in. round	4	4
		Gas pipe size IPS	1/2	1/2
Indoor Blower		Wheel nominal diameter x width - in.	10 x 9	10 x 10
		Motor output - hp	1/2	3/4
		Tons of add-on cooling	2 - 3.5	3 - 4
		Air Volume Range - cfm	350 - 1600	765 - 1800
Electrical Data		Voltage	120 volts - 60 hertz - 1 phase	
		Blower motor full load amps	6.1	8.2
		Maximum overcurrent protection	15	15
Shipping Data		lbs. - 1 package	136	140

NOTE - Filters and provisions for mounting are not furnished and must be field provided.

[1] Annual Fuel Utilization Efficiency based on DOE test procedures and according to FTC labeling regulations. Isolated combustion system rating for non-weatherized furnaces.

SPECIFICATIONS

Gas Heating Performance		**Model No.**	**EL280UH110E48C**	**EL280UH110E60C**
		Model No. - Low NOx	**- - -**	**EL280UH110XE60C**
		[1] AFUE	80%	80%
	High Fire	Input - Btuh	110,000	110,000
		Output - Btuh	89,000	88,000
		Temperature rise range - °F	35 - 65	30 - 60
		Gas Manifold Pressure (in. w.g.) Nat. Gas / LPG/Propane	3.5 / 10.0	3.5 / 10.0
	Low Fire	Input - Btuh	72,000	72,000
		Output - Btuh	58,000	59,000
		Temperature rise range - °F	25 - 55	20 - 50
		Gas Manifold Pressure (in. w.g.) Nat. Gas / LPG/Propane	1.7 / 4.5	1.7 / 4.5
High static - in. w.g.		Heating	0.5	0.5
		Cooling	0.5	0.5
Connections in.		Flue connection − in. round	4	4
		Gas pipe size IPS	1/2	1/2
Indoor Blower		Wheel nominal diameter x width - in.	10 x 10	11-1/2 x 10
		Motor output - hp	3/4	1
		Tons of add-on cooling	3 - 4	4 - 5
		Air Volume Range - cfm	865 - 1780	1100 - 2200
Electrical Data		Voltage	120 volts - 60 hertz - 1 phase	
		Blower motor full load amps	8.2	10
		Maximum overcurrent protection	15	15
Shipping Data		lbs. - 1 package	152	156

NOTE - Filters and provisions for mounting are not furnished and must be field provided.

[1] Annual Fuel Utilization Efficiency based on DOE test procedures and according to FTC labeling regulations. Isolated combustion system rating for non-weatherized furnaces.

OPTIONAL ACCESSORIES - ORDER SEPARATELY

			"A" Width Models	"B" Width Models	"C" Width Models
CABINET					
Horizontal Suspension Kit - Horizontal only			**51W10**	**51W10**	**51W10**
Return Air Base - Upflow only			**65W75**	**50W98**	**50W99**
High Performance Economizer (Commercial only)			**10U53**	**10U53**	**10U53**
CONTROLS					
E30 Smart Wi-Fi Thermostat			**20A65**	**20A65**	**20A65**
Remote Outdoor Temperature Sensor			**X2658**	**X2658**	**X2658**
Furnace Twinning Panel			**Y3653**	**Y3653**	**Y3653**
Furnace Twinning Kit			**16W72**	**16W72**	**16W72**
Transformer (75VA)			**27J32**	**27J32**	**27J32**
FILTERS					
[1] **Air Filter and Rack Kit**	Horizontal (end)		**87L95**	**87L96**	**87L97**
		Size of filter - in.	14 x 25 x 1	18 x 25 x 1	20 x 25 x 1
	Side Return	Single	**44J22**	**44J22**	**44J22**
		Ten Pack	**66K63**	**66K63**	**66K63**
		Size of filter - in.	16 x 25 x 1	16 x 25 x 1	16 x 25 x 1
VENTING					
Vent Adaptor − 6 in. conn. size upflow applications only			**18M79**	**18M79**	**18M79**

[1] Cleanable polyurethane, frame-type filter.

GAS HEAT ACCESSORIES - ORDER SEPARATELY

Input	High Altitude Pressure Switch Kit			Natural Gas to LPG/Propane Kit	LPG/Propane to Natural Gas Kit	Natural Gas High Altitude Orifice Kit	LPG/Propane High Altitude Orifice Kit
	0 - 4500 ft.	4501 - 7500 ft.	7501 - 10,000 ft.	0 - 7500 ft.	0 - 7500 ft.	7501 - 10,000 ft.	7501 - 10,000 ft.
045	No Change	91W53	73W35	11K51	77W09	73W37	11K46
070	No Change	91W53	73W35	11K51	77W09	73W37	11K46
090	No Change	91W53	73W35	11K51	77W09	73W37	11K46
110	No Change	91W53	73W35	11K51	77W09	73W37	11K46

REFRIGERANT DETECTION SYSTEM (RDS) COMPONENTS

Description		Order No.
Refrigerant Detection System (RDS) Coil Sensor Kit		26Z69
Refrigerant Detection System (RDS) Blower Control Board	Any Lennox® Communicating Furnace or any Non-Communicating 24V Furnace (Universal)	27A03
	Any Non-Communicating 24V Furnace	27A02

NOTE - Communicating Blower Control Board and Sensor can be used universally with Lennox® communicating furnace or any non-communicating 24 volt furnace.
Non-Communicating Blower Control Board and Sensor can be used with any non-communicating 24 volt furnace.

HIGH ALTITUDE DERATE

NOTE - Units may be installed at altitudes up to 4500 ft. above sea level without any modifications.
At altitudes above 4500 ft. units must be derated to match information in the shaded area shown below.

NOTE - This is the only permissible derate for these units.

Input	Gas Manifold Pressure (Outlet) in. w.g.											
	0 - 4500 Feet				4501 -7500 Feet				7501 - 10,000 ft.			
	Natural Gas		LPG/Propane		Natural Gas		LPG/Propane		[1] Natural Gas		LPG/Propane	
	High Fire	Low Fire	High Fire	Low Fire	High Fire	Low Fire	High Fire	Low Fire	High Fire	Low Fire	High Fire	Low Fire
045	3.5	1.7	10	4.5	3.2	1.5	10	4.5	3.5	1.7	10	4.5
070	3.5	1.7	10	4.5	3.2	1.5	10	4.5	3.5	1.7	10	4.5
090	3.5	1.7	10	4.5	3.2	1.5	10	4.5	3.5	1.7	10	4.5
110	3.5	1.7	10	4.5	3.2	1.5	10	4.5	3.5	1.7	10	4.5

[1] Natural Gas High Altitude Orifice Kit required.

[1] NOTE - 60C size units that require air volumes over 1800 cfm must have one of the following:
1. Single side return air and Optional Return Air Base with transition that must accommodate required 20 x 25 x 1 inch (508 x 635 x 25 mm) air filter to maintain proper velocity.
2. Bottom return air.
3. Return air from both sides.
4. Bottom and one side return air.

See Blower Performance Tables for additional information.

[2] Flue outlet may be horizontal but furnace must be vented vertically

[3] Optional External Side Return Air Filter Kit is not for use with the optional Return Air Base.

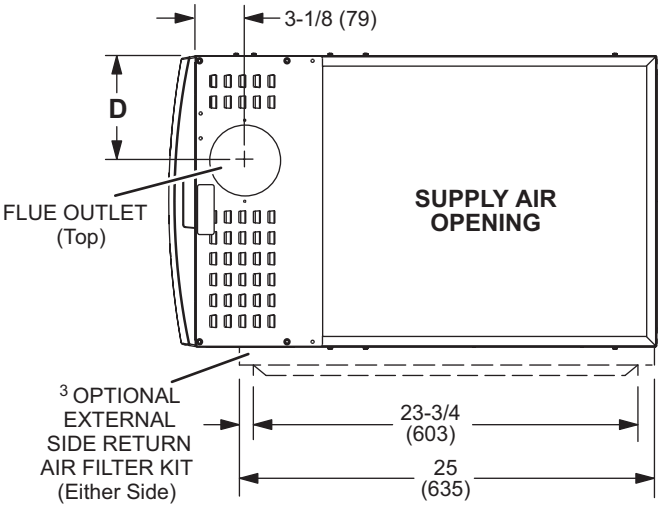

TOP VIEW

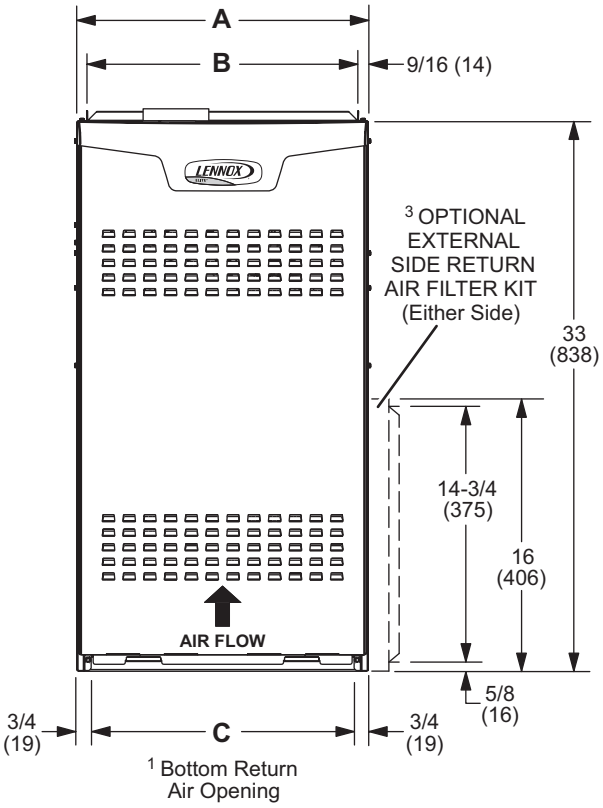

FRONT VIEW

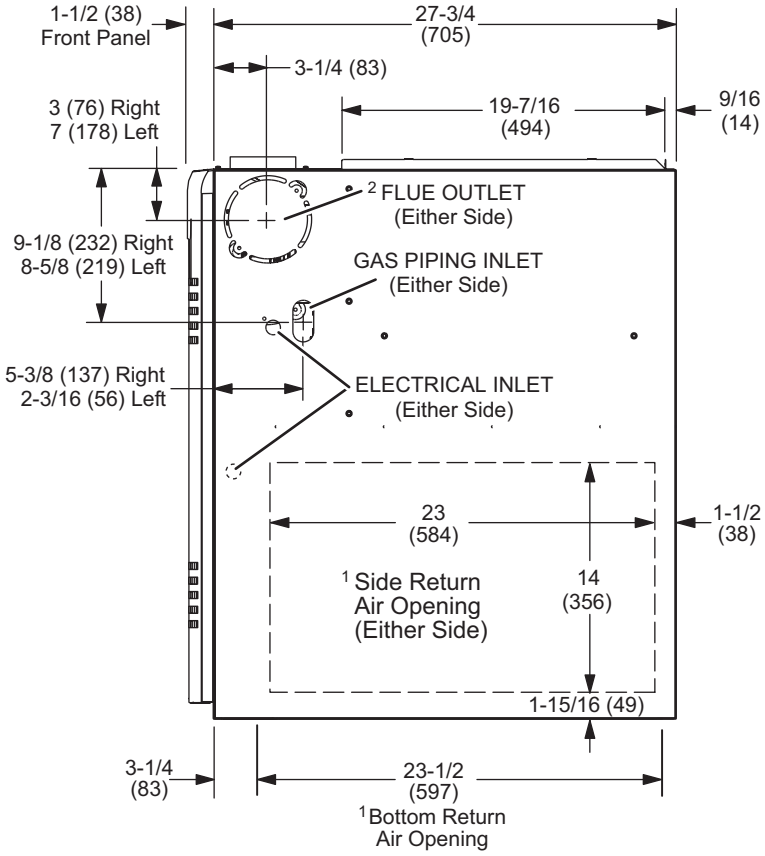

SIDE VIEW

Model No.	A		B		C		D	
	in.	mm	in.	mm	in.	mm	in.	mm
EL280UH045E36A EL280UH070E36A	14-1/2	368	13-3/8	340	13	330	4-3/4	121
EL280UH090E36B EL280UH090E48B	17-1/2	446	16-3/8	416	16	406	6-1/4	159
EL280UH110E48C EL280UH110E60C	21	533	19-7/8	504	19-1/2	495	8	203

LEFT-HAND AIR DISCHARGE

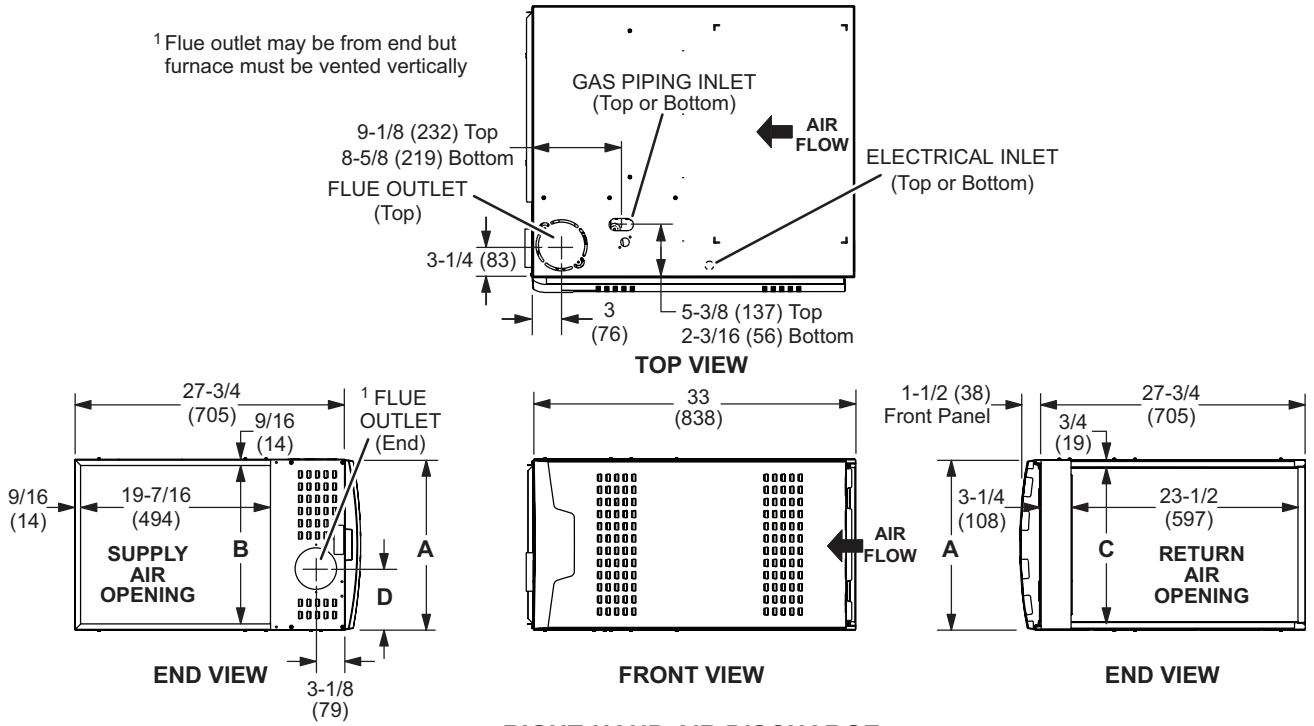

RIGHT-HAND AIR DISCHARGE

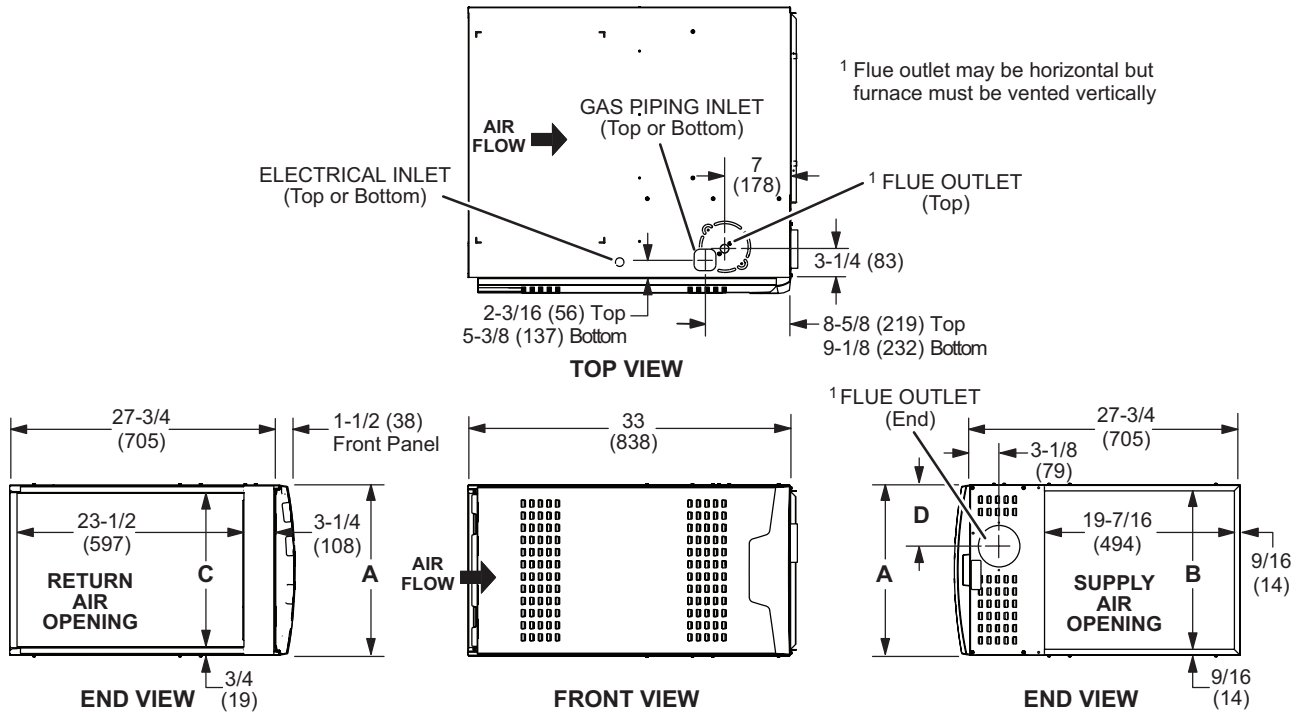

Model No.	A		B		C		D	
	in.	mm	in.	mm	in.	mm	in.	mm
EL280UH045E36A EL280UH070E36A	14-1/2	368	13-3/8	340	13	330	4-3/4	121
EL280UH090E36B EL280UH090E48B	17-1/2	446	16-3/8	416	16	406	6-1/4	159
EL280UH110E48C EL280UH110E60C	21	533	19-7/8	504	19-1/2	495	8	203

HORIZONTAL (END) FILTER KIT

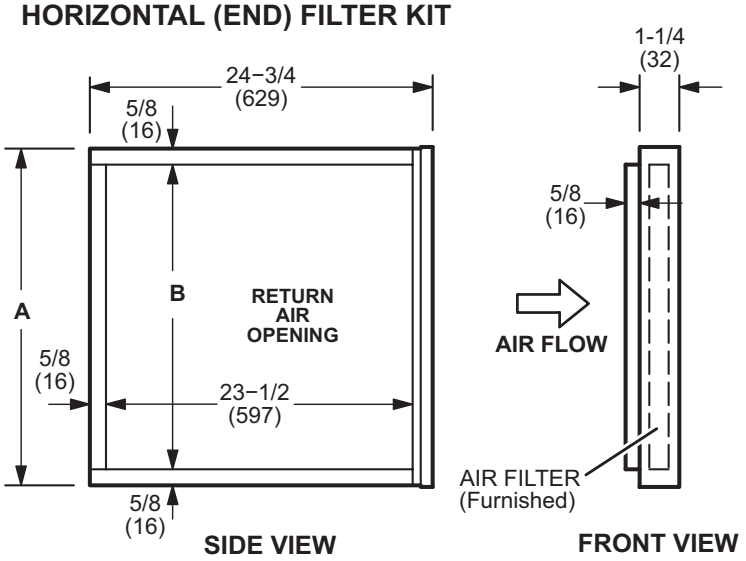

Furnace Cabinet Width	Catalog Number	A		B	
		in.	mm	in.	mm
A	87L95	14	356	12-3/4	324
B	87L96	18	457	16-3/4	425
C	87L97	21	533	18-3/4	476

Optional Return Air Base
(Upflow Applications Only - For use with A, B and C width cabinets)

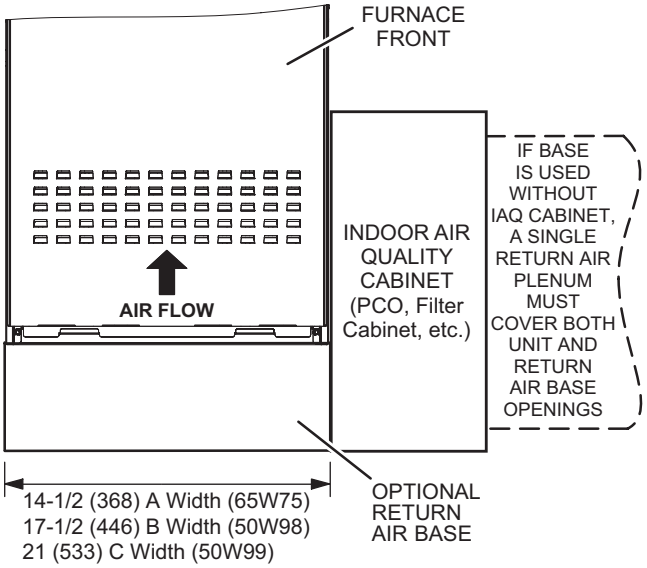

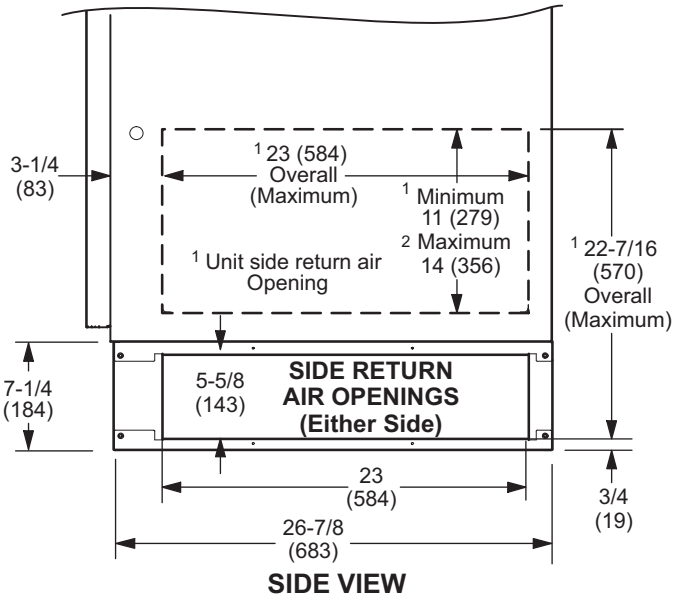

NOTE- Optional Side Return Air Filter Kits are not for use with Optional Return Air Base.

[1] Both the unit return air opening and the base return air opening must be covered by a single plenum or IAQ cabinet. Minimum unit side return air opening dimensions for units requiring 1800 cfm or more of air (W x H): 23 x 11 in. (584 x 279 mm). The opening can be cut as needed to accommodate plenum or IAQ cabinet while maintaining dimensions shown. Side return air openings must be cut in the field. There are cutting guides stenciled on the cabinet for the side return air opening. The size of the opening must not extend beyond the markings on the furnace cabinet.

[2] To minimize pressure drop, the largest opening height possible, up to 14 in. (356 mm), is preferred.

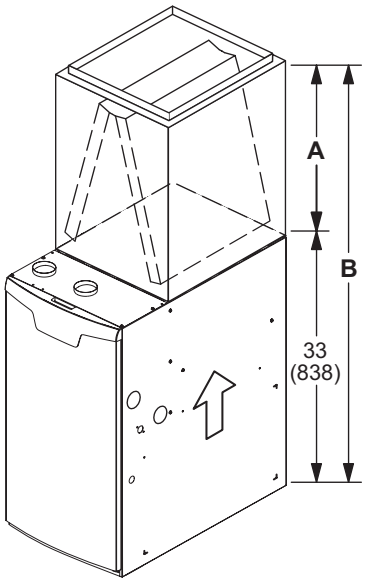

UPFLOW POSITION - CASED

Model		A		B	
CK40CT	**C35/CX35**	**in.**	**mm**	**in.**	**mm**
CK40CT-18/24A CK40CT-18/24B	C35/CX35-18/24A C35/CX35-18/24B	16-1/2	419	49-1/2	1257
CK40CT-24A CK40CT-24B	C35/CX35-24A C35/CX35-24B	18-1/2	470	51-1/2	1308
CK40CT-30A CK40CT-30B	C35/CX35-30A C35/CX35-30B	22-1/2	572	55-1/2	1410
CK40CT-30/36A CK40CT-30/36B CK40CT-30/36C	C35/CX35-30/36A C35/CX35-30/36B C35/CX35-30/36C	24-1/2	622	57-1/2	1461
CK40CT-36A CK40CT-36B	C35/CX35-36A C35/CX35-36B	24-1/2	622	57-1/2	1461
CK40CT-48B CK40CT-48C	C35/CX35-48B C35/CX35-48C	27-1/2	699	60-1/2	1537
CK40CT-49C	C35/CX35-49C	29-1/2	749	62-1/2	1588
CK40CT-50/60C	C35/CX35-50/60C	27-1/2	699	60-1/2	1537
CK40CT-60C	CX35-60C	31-1/2	800	64-1/2	1638

UPFLOW POSITION - UNCASED

Model		A		B	
CK40UT	**C35**	**in.**	**mm**	**in.**	**mm**
CK40UT-18/24A CK40UT-18/24B	C35-18/24A C35-18/24B	14-1/8	359	47-1/8	1197
CK40UT-24A CK40UT-24B	C35-24A C35-24B	16-3/8	416	49-3/8	1254
CK40UT-30A CK40UT-30B	C35-30A C35-30B	20-3/4	527	53-3/4	1365
CK40UT-30/36A CK40UT-30/36B CK40UT-30/36C	C35-30/36A C35-30/36B C35-30/36C	22-1/4	565	55-1/4	1403
CK40UT-36A CK40UT-36B	C35-36A C35-36B	22-3/8	568	55-3/8	1407
CK40UT-48B CK40UT-48C	C35-48B C35-48C	26-1/4	667	59-1/4	1505
CK40UT-49C	C35-49C	28-1/2	724	61-1/2	1562
CK40UT-50/60C	C35-50/60C	25-7/8	657	58-7/8	1495
CK40UT-60C	C35-60C	30-5/8	778	63-5/8	1616

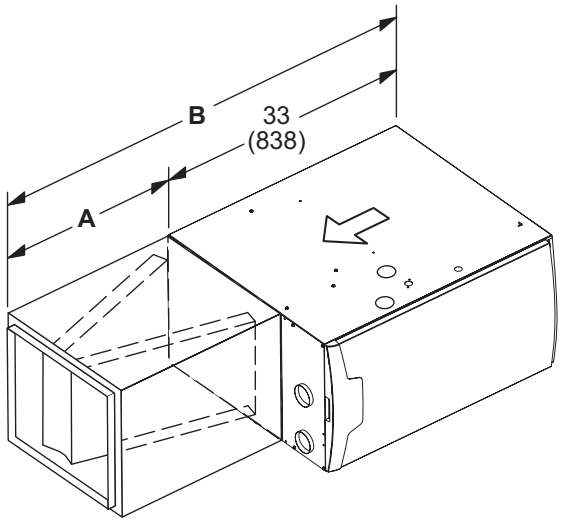

HORIZONTAL POSITION

Model		A		B	
CK40HT	**CHX35**	**in.**	**mm**	**in.**	**mm**
CK40HT-18A CK40HT-24A CK40HT-24B CK40HT-30B CK40HT-36A CK40HT-36B CK40HT-36C CK40HT-42C CK40HT-48C	CHX35-18A CHX35-24A CHX35-24B CHX35-30B CHX35-36A CHX35-36B CHX35-36C CHX35-42C CHX35-48C	26-1/2	673	59-1/2	1511
CK40CT-30A CK40CT-42B CK40CT-48B CK40CT-51/61C	CHX35-30A CHX35-42B CHX35-48B CHX35-51/61C	31-1/2	880	64-1/2	1638

BLOWER DATA

EL280UH045E36A PERFORMANCE (Less Filter)

External Static Pressure in. w.g.	Air Volume / Watts at Various Blower Speeds									
	High (Black)		Medium-High (Brown)		Medium (Blue)		Medium-Low (Yellow)		Low (Red)	
	cfm	Watts	cfm	Watts	cfm	Watts	cfm	Watts	cfm	Watts
0.00	1441	306	1232	168	1056	107	1002	90	1036	103
0.10	1436	310	1199	175	1022	113	875	79	875	82
0.20	1431	315	1166	183	987	120	747	68	714	62
0.30	1413	324	1138	192	938	129	696	76	514	49
0.40	1378	337	1104	199	905	137	640	81	448	55
0.50	1350	345	1070	206	858	146	588	87	367	60
0.60	1321	357	1031	215	824	152	533	93	311	65
0.70	1292	366	993	226	773	159	488	98	272	69
0.80	1267	378	969	233	737	165	426	104	232	73
0.90	1239	385	926	243	691	173	382	108	-	-
1.00	1210	394	891	250	649	179	-	-	-	-

EL280UH070E36A PERFORMANCE (Less Filter)

External Static Pressure in. w.g.	Air Volume / Watts at Various Blower Speeds									
	High (Black)		Medium-High (Brown)		Medium (Blue)		Medium-Low (Yellow)		Low (Red)	
	cfm	Watts	cfm	Watts	cfm	Watts	cfm	Watts	cfm	Watts
0.00	1458	302	1325	240	1200	165	966	97	877	78
0.10	1425	314	1300	247	1163	177	922	102	801	75
0.20	1391	326	1275	253	1126	189	877	108	725	71
0.30	1369	336	1245	266	1099	196	840	115	673	77
0.40	1335	348	1217	271	1059	205	796	122	625	85
0.50	1312	355	1183	284	1029	216	761	128	580	87
0.60	1282	366	1156	292	995	223	718	137	530	95
0.70	1255	378	1123	303	959	231	680	144	482	99
0.80	1227	386	1094	309	929	240	638	149	429	107
0.90	1196	397	1065	321	902	247	605	157	371	111
1.00	1170	405	1034	328	865	254	570	165	-	-

EL280UH090E36B PERFORMANCE (Less Filter)

External Static Pressure in. w.g.	Air Volume / Watts at Various Blower Speeds									
	High (Black)		Medium-High (Brown)		Medium (Blue)		Medium-Low (Yellow)		Low (Red)	
	cfm	Watts	cfm	Watts	cfm	Watts	cfm	Watts	cfm	Watts
0.00	1552	289	1463	219	1299	153	1059	89	1169	104
0.10	1524	300	1418	231	1260	167	1012	95	973	86
0.20	1495	311	1374	243	1220	182	965	102	777	67
0.30	1460	322	1323	254	1183	188	908	110	709	73
0.40	1424	334	1297	263	1129	200	853	115	650	82
0.50	1390	343	1259	274	1100	205	802	128	575	87
0.60	1358	357	1227	283	1064	213	736	132	517	96
0.70	1329	364	1185	294	1013	223	684	138	437	100
0.80	1289	376	1144	305	968	232	639	147	380	105
0.90	1246	385	1108	311	929	238	572	152	344	108
1.00	1215	396	1059	323	881	250	510	158	-	-

BLOWER DATA

EL280UH090E48B PERFORMANCE (Less Filter)

External Static Pressure in. w.g.	Air Volume / Watts at Various Blower Speeds									
	High (Black)		Medium-High (Brown)		Medium (Blue)		Medium-Low (Yellow)		Low (Red)	
	cfm	Watts	cfm	Watts	cfm	Watts	cfm	Watts	cfm	Watts
0.00	1768	372	1567	260	1460	199	1350	178	1265	128
0.10	1743	383	1538	269	1419	213	1321	187	1213	141
0.20	1718	395	1509	279	1379	228	1292	195	1161	155
0.30	1681	412	1466	293	1344	237	1245	207	1113	164
0.40	1661	423	1434	307	1298	247	1198	217	1059	172
0.50	1619	435	1396	317	1259	258	1155	227	1017	178
0.60	1592	449	1357	328	1210	270	1106	235	968	188
0.70	1554	460	1313	339	1176	279	1056	244	924	198
0.80	1520	472	1274	348	1131	289	1019	254	873	205
0.90	1457	477	1239	357	1097	295	977	263	821	214
1.00	1291	429	1195	369	1055	306	936	271	738	224

EL280UH110E48C PERFORMANCE (Less Filter)

External Static Pressure in. w.g.	Air Volume / Watts at Various Blower Speeds									
	High (Black)		Medium-High (Brown)		Medium (Blue)		Medium-Low (Yellow)		Low (Red)	
	cfm	Watts	cfm	Watts	cfm	Watts	cfm	Watts	cfm	Watts
0.00	1829	339	1628	240	1493	187	1418	150	1293	128
0.10	1788	355	1586	250	1450	199	1365	166	1241	134
0.20	1747	371	1543	259	1407	210	1313	182	1188	139
0.30	1714	384	1501	273	1369	219	1280	189	1141	149
0.40	1681	395	1458	286	1323	231	1229	197	1088	162
0.50	1638	409	1421	296	1271	240	1174	209	1032	172
0.60	1604	423	1379	308	1227	251	1131	218	981	178
0.70	1569	432	1328	316	1191	259	1083	229	926	189
0.80	1533	447	1285	326	1138	268	1040	236	871	197
0.90	1489	459	1245	338	1089	283	974	249	828	206
1.00	1455	472	1208	348	1045	294	934	255	763	215

BLOWER DATA

EL280UH110E60C PERFORMANCE (Less Filter)

External Static Pressure in. w.g.	Air Volume / Watts at Different Blower Speeds																			
	Bottom Return Air, Side Return Air from Both Sides or Return Air from Bottom and One Side.										**Single Side Return Air** - Air volumes in **bold** (over 1800 cfm) require Optional Return Air Base and field fabricated transition to accommodate 20 x 25 x 1 in. air filter in order to maintain proper air velocity.									
	High (Black)		**Medium-High** (Brown)		**Medium** (Blue)		**Medium-Low** (Yellow)		**Low** (Red)		**High** (Black)		**Medium-High** (Brown)		**Medium** (Blue)		**Medium-Low** (Yellow)		**Low** (Red)	
	cfm	**Watts**	**cfm**	**Watts**	**cfm**	**Watts**	**cfm**	**Watts**	**cfm**	**Watts**	**cfm**	**Watts**	**cfm**	**Watts**	**cfm**	**Watts**	**cfm**	**Watts**	**cfm**	**Watts**
0.00	2242	596	1989	413	1821	327	1713	271	1545	194	**2201**	**590**	**1946**	**415**	**1806**	**322**	1686	264	1523	190
0.10	2196	614	1954	430	1794	337	1674	282	1499	204	**2164**	**611**	**1911**	**430**	1762	336	1647	279	1473	201
0.20	2151	632	1919	446	1768	347	1634	292	1454	214	**2126**	**631**	**1876**	**444**	1718	350	1608	294	1424	212
0.30	2115	645	1879	461	1706	364	1592	303	1402	227	**2092**	**646**	**1839**	**458**	1673	361	1563	306	1373	226
0.40	2084	662	1845	477	1670	377	1555	318	1357	238	**2055**	**662**	1800	474	1638	374	1520	317	1324	237
0.50	2062	678	1799	491	1624	390	1507	328	1309	249	**2016**	**678**	1764	488	1594	388	1477	328	1275	247
0.60	2016	693	1763	502	1584	402	1464	342	1255	261	**1986**	**691**	1727	501	1556	401	1440	339	1230	259
0.70	1991	705	1728	519	1547	413	1428	355	1208	269	**1967**	**705**	1684	515	1521	411	1394	352	1172	270
0.80	1950	724	1684	531	1492	426	1374	366	1156	281	**1916**	**720**	1656	526	1480	425	1350	364	1141	278
0.90	1912	733	1651	543	1460	439	1322	376	1105	292	**1895**	**734**	1618	538	1440	437	1310	376	1092	290
1.00	1876	753	1605	557	1426	450	1291	389	1038	303	**1845**	**752**	1577	553	1396	450	1267	389	1046	301

REVISIONS

Sections	Description of Change
Dimensions	Updated Furnace/Coil Combined Dimension data for new CK40 coils.
Override Accessories	Added Refrigerant Detection System (RDS) Components.

Visit us at www.Lennox.com
For the latest technical information, www.LennoxPros.com
Contact us at 1-800-9-LENNOX

NOTE - Due to Lennox' ongoing commitment to quality, Specifications, Ratings and Dimensions subject to change without notice and without incurring liability.
Improper installation, adjustment, alteration, service or maintenance can cause property damage or personal injury.
Installation and service must be performed by a qualified installer and servicing agency.

©2024 Lennox Industries, Inc.