PACKAGED HEAT PUMP

LRP14HP

Single-Phase - R-410A - 60Hz

RESIDENTIAL PRODUCT SPECIFICATIONS

Bulletin No. 210908
January 2023
Supersedes February 2022

SEER2 - 13.4 / SEER - 14.0
HSPF2 - 6.7 / HSPF - 8.0
2 to 5 Tons
Cooling Capacity - 22,600 to 57,000 Btuh
Heating Capacity - 21,600 to 58,000 Btuh
Optional Electric Heat - 5 to 20 kW

MODEL NUMBER IDENTIFICATION

L RP 14 HP 36 E P -3 -A

Brand
L = Lennox

Product Type
RP = Residential Packaged Unit

Nominal Efficiency

Unit Type
HP = Packaged Heat Pump

Minor Revision Sequence
A = 1st Generation

Major Revision Sequence
3 = 3rd Generation

Voltage
P = 208/230V-1phase-60Hz

Blower
E = High Efficiency Constant Torque Blower Motor

Nominal Cooling Capacity
24 = 2 tons
30 = 2.5 tons
36 = 3 tons
42 = 3.5 tons
48 = 4 tons
60 = 5 tons

CONTENTS

Approvals And Warranty 2
Blower Data 12
Cooling Ratings - 2017 10
Cooling Ratings - 2023 11
Dimensions 13
- Accessories 14
- Unit 13
Electrical Data 6
Electric Heat Capacities 9
Electric Heat Data 8
Features 3
Field Wiring 9
Heating Ratings - 2017 10
Heating Ratings - 2023 11
Installation Clearances 9
Model Number Identification. 1
Optional Accessories - Order Separately 7
Specifications 6

APPROVALS AND WARRANTY

APPROVALS

- AHRI Standard 210/240 Certified
- Design Certified by ETL Intertek
- Cooling system rated according to DOE test procedures
- Heating ratings are Certified by AHRI according to U.S. Department of Energy (DOE) test procedures and Federal Trade Commission (FTC) labeling regulations
- Units are ETL Certified for the U.S. and Canada
- Unit and components are UL bonded for grounding to meet safety standards for servicing
- Optional electric heaters are ETL listed for the US and Canada and are rated and tested according to DOE test procedures and FTC labeling regulations
- All models with the Optional Seismic Strapping Kit installed have Seismic Certification for 2018 International Building Code (IBC) and 2019 California Building Code (CBC) ASCE 7
- Test operated at the factory before shipment ensuring dependable operation at start-up

WARRANTY

- Compressor:
  - Limited ten years in residential installations
  - Limited five years in non-residential installations
- All other covered components:
  - Limited five years in residential installations
  - Limited one year in non-residential installations

NOTE - Refer to Lennox® Basic Limited Warranty at www.Lennox.com for additional details.

FEATURES

APPLICATIONS

- Designed for outdoor installations at ground level or rooftop for residential applications

REFRIGERATION SYSTEM

R-410A Refrigerant
- Non-chlorine, ozone friendly
- Unit is factory pre-charged

Indoor and Outdoor Coils
- Copper tube with aluminum fin coils

Anti-Microbial Evaporator Coil Drain Pan
- Anti-Microbial additive resists growth of mold and mildew on drain pan which improves indoor air quality and reduces drain line blockage
- Drain pan overflow switch monitors condensate level in drain pan and shuts down unit if drain becomes clogged
- Fully insulated to reduce condensation

Outdoor Coil Fan
- Weather protected heavy duty condenser fan motor
- Coated steel fan blades for long life
- Corrosion-resistant coated steel fan guard
- Internally mounted
- Totally enclosed fan motor

Four-Way Reversing Valve
- Rapid changeover of refrigerant flow direction from cooling to heating and vice versa
- Operates on pressure differential between outdoor unit and indoor coil
- Factory installed

High Pressure Switch
- Protects the system from high pressure conditions
- Automatic reset.

Loss of Charge Switch
- Shuts off unit if suction pressure falls below setting
- Loss of charge and freeze-up protection

COMPRESSOR

Scroll Compressor
- High efficiency with uniform suction flow
- Constant discharge flow, high volumetric efficiency and quiet operation
- Low gas pulses during compression reduces operational sound levels
- Compressor motor is internally protected from excessive current and temperature
- Muffler in discharge line reduces operating sound levels
- Compressor is installed in the unit on resilient rubber mounts for vibration free operation

Scroll Compressor Operation
- Two involute spiral scrolls matched together generate a series of crescent-shaped gas pockets between them
- During compression, one scroll remains stationary while the other scroll orbits around it
- Gas is drawn into the outer pocket, the pocket is sealed as the scroll rotates
- As the spiral movement continues, gas pockets are pushed to the center of the scrolls. Volume between the pockets is simultaneously reduced
- When the pocket reaches the center, gas is now at high pressure and is forced out of a port located in the center of the fixed scrolls
- During compression, several pockets are compressed simultaneously resulting in a smooth continuous compression cycle
- Continuous flank contact, maintained by centrifugal force, minimizes gas leakage and maximizes efficiency
- Compressor is tolerant to the effects of slugging and contaminants. If this occurs, scrolls separate, allowing liquid or contaminants to be worked toward the center and discharged

Optional Accessories

Compressor Crankcase Heater
- Protects against refrigerant migration that can occur during low ambient operation

Compressor Hard Start Kit
- A PSC compressor motor does not normally need a potential relay and start capacitor
- In conditions such as low voltage, kit may be required to increase the compressor starting torque

Compressor Timed-Off Control
- Prevents compressor short-cycling
- Allows time for suction and discharge pressure to equalize
- Permits compressor start-up in an unloaded condition
- Automatic reset
- Five minute delay between compressor shut-off and start-up

Low Ambient Kit (40°F)
- Cycles the outdoor fan while allowing compressor operation in the cooling cycle
- This intermittent fan operation allows the system to operate without icing the evaporator coil and losing capacity
- Designed for use in ambient temperatures no lower than 40°F

NOTE - A crankcase heater must be installed on the compressor.

FEATURES

CABINET

- Conditioned areas insulated with foil faced insulation
- Minimizes heat loss and reduce operating sound levels
- Powder paint for maximum durability
- Easy service access
- Steel louvered panels provides complete coil protection
- Full perimeter heavy-gauge galvanized steel base rail
- Base rails have rigging holes
- Two sides of the base rail have forklift slots
- Raised edges around duct and power entry openings in the bottom of the unit for water protection

Airflow Choice
- Units are shipped with all air openings sealed
  - For downflow (vertical) applications, remove the downflow duct covers
  - For horizontal applications, remove the horizontal duct covers

Electrical Inlets and Service Valves
- Standard field wiring electrical inlets are located in one central area of the cabinet
- See dimension drawing
- Gauge ports are located inside the cabinet

Optional Accessories

Base Rail Opening Closure Kit
- Kit consists of panels and hardware to cover base rail rigging holes and forklift slot openings

Bottom Power Entry Kit
- Allows field wiring through the unit base pan

Rectangular to Round Duct Adaptor Kits
- Downflow or horizontal kits available
- Converts rectangular supply and return air openings on unit cabinet to round diameter
- Several sizes available

Clip Curb (Full Perimeter)
- Interlocking tabs fasten corners together
- No tools required
- Fully gasketed around curb perimeter and supply and return openings
- Available in 8, 14, 18 and 24 inch heights
- Shipped knocked down

Adjustable Pitch Roof Curb (Full Perimeter)
- Fully adjustable pitch curb provides a level platform for packaged units
- Allows flexible installations on roofs with sloped or uneven angles
- Adjustable from 2/12 to 6/12 pitch
- Fully gasketed around curb perimeter and supply and return openings
- Clip Curb (knock-down) and Welded models available

All Curbs
- IBC 2018 compliant
- CBC 2019 compliant
- Seismic rating - SDS 2.0g, z/h=1, Ip=1.5
- Wind rating - 240 mph (Lateral), 214 mph (Uplift)
- Maximum load rating - 800 lbs.

Adaptor Curbs (not shown)
- Curbs are regionally sourced
- Dimensions vary based upon the source

NOTE - Contact your local sales representative for a detailed cut sheet with applicable dimensions.

Strapping Kit - Hurricane
- Galvanized steel .07 in. thick minimum
- Attaches unit base rails to host structure
- Separate kits available for Slab Mount or Rail Mount

Strapping Kit - Seismic
- Heavy-gauge galvanized steel
- Kit contains 4 brackets and mounting hardware

AIR FILTER (required)

Optional Accessories

Internal Filter Rack Kits
- Available for 1 in. thick filters
- Filter rails mount internal to unit

NOTE - Filters must be field provided.

SUPPLY AIR BLOWER

Direct drive blower
- Blower wheel is statically and dynamically balanced
- Resiliently mounted
- Blower assembly easily removed for servicing

Constant Torque Blower Motor
- DC Brushless Motor
- High Efficiency Constant Torque
- ECM (Electronically Commutated Motor)
- Motor is programmed to provide constant torque at each of the selectable speeds
- Fixed blower “On” delay prevents cold air from entering system during gas heating demand
- See Blower Performance tables

FEATURES

ELECTRIC HEAT (5-20 KW)

Optional Accessories

- Field installed internal to unit cabinet
- Available in several voltages and kW sizes
- Helix wound nichrome heating elements exposed directly in air stream
- Instant heat transfer
- Low element temperatures and long service life
- Cutoff limit control provides positive protection in case of excessive temperatures
- Factory assembled with controls installed and wired

Single Point Power Supply Kits

- Control Box used with optional electric heat
- For single power supply connected to multi-circuit electric heat

NOTE - Side power entry only.

CONTROLS

Defrost Control

- Furnished as standard equipment
- Enables a defrost cycle for every 30, 60 or 90 minutes (adjustable) of compressor "on" time at outdoor coil temperatures below freezing
- Units are quiet-shift enabled
- Compressor is de-energized entering and exiting the defrost cycle, reducing system sounds
- Sensor mounted on liquid line determines when defrost cycle is required and also when to terminate cycle
- Anti-short cycle, timed-off control incorporated into the board

24 Volt Transformer

- 40VA transformer furnished and factory installed in control area

Optional Accessories

M30 Smart Wi-Fi Thermostat

- Wi-Fi-enabled, electronic 7-day, universal, multi-stage, programmable, touchscreen thermostat
- 4 Heat/2 Cool
- Auto-changeover
- Dual-fuel control with optional outdoor sensor
- Controls dehumidification during cooling mode and humidification during heating mode

- Offers enhanced capabilities including humidification / dehumidification / dewpoint measurement and control, Humiditrol® control, and equipment maintenance reminders
- Easy to read 4.3 in. color touchscreen (measured diagonally)
- LCD display with backlight shows the current and set temperature, time, inside relative humidity, system status (operating mode and schedules) and outside temperature (optional outdoor sensor required)
- Smooth Setback Recovery starts system early to achieve setpoint at start of program period
- Compressor short-cycle protection (5 minutes)
- Up to four separate schedules are available plus Schedule IQ™
- One-Touch Away Mode - A quick and easy way to set the cooling and heating setpoints while away
- Smart Away™ - Uses geo-fencing technology to determine when the homeowner is within a predetermined distance from the home to operate the system when leaving, away and arriving
- Wi-Fi remote monitoring and adjustment through a home wireless network for desktop PCs, laptops and apps for smartphones or tablets
- Smart home automation compatible with Amazon Alexa®, Google Assistant and IFTTT
- Service Dashboard features online real-time monitoring of installed M30 thermostats

NOTE - See the M30 Smart Wi-Fi Thermostat Product Specifications bulletin in the Controls section for more information.

Remote Outdoor Temperature Sensor

- Used with the M30 Smart Wi-Fi Thermostat
- Outdoor sensor allows thermostat to display outdoor temperature
- Automatically detected when connected to thermostat

NOTE - Remote Outdoor Temperature Sensor is recommended for heat pump balance point control to lock out some of the electric heating elements where two-stage control is applicable.

Thermostat

- Thermostat is not furnished with unit
- Lennox Price Book for selection

SPECIFICATIONS

General Data		Model No.	LRP14HP24	LRP14HP30	LRP14HP36	LRP14HP42	LRP14HP48	LRP14HP60
		Nominal Tonnage	2	2.5	3	3.5	4	5
Cooling / Heating Performance	Cooling	Total capacity - Btuh	23,000	28,600	34,000	39,500	45,500	56,000
		[1] SEER2 (Btuh/Watt)	13.4	13.4	13.4	13.4	13.4	13.4
		[1] EER2 (Btuh/Watt)	10.6	10.6	10.6	10.6	10.6	10.6
		Total capacity - Btuh	22,600	28,600	34,000	40,000	46,000	57,000
		[1] SEER (Btuh/Watt)	14.0	14.0	14.0	14.0	14.0	14.0
		[1] EER (Btuh/Watt)	11.0	11.0	11.0	11.0	11.0	11.0
		Total unit watts	2055	2600	3090	3635	4180	5180
	High Temp. Heat	Total capacity - Btuh	21,600	25.800	32.600	40,000	47,000	58,000
		HSPF2 (Region IV)	6.7	6.7	6.7	6.7	6.7	6.7
		COP2	3.4	3.7	3.6	3.5	3.6	3.3
		Total capacity - Btuh	22,000	27,000	32,400	39,000	45,000	56,000
		HSPF (Region IV)	8.0	8.0	8.0	8.0	8.0	8.0
		COP	3.8	3.7	3.7	3.6	3.7	3.7
		Total unit watts	1700	2140	2645	3175	3565	4440
	Low Temp. Heat	Total capacity - Btuh	11,900	15.000	18,300	22,500	28,200	33,300
		COP2	1.9	2.2	2.1	2.1	2.3	2.0
		Total capacity - Btuh	12,300	15,900	20,000	23,600	27,000	33,600
		COP	2.3	2.3	2.3	2.3	2.3	2.4
		Total unit watts	1570	2025	2550	3010	3445	4105
[2] Sound Rating Number (dBA)			78	78	76	78	79	78
Refrigerant		Type	R-410A	R-410A	R-410A	R-410A	R-410A	R-410A
		Charge	5 lbs. 6 oz.	5 lbs. 11 oz.	5 lbs. 11 oz.	10 lbs. 7 oz.	10 lbs. 13 oz.	10 lbs. 14 oz.
Condensate drain size (fpt) - in.			3/4	3/4	3/4	3/4	3/4	3/4
Outdoor Coil		Net Face Area - sq. ft.	16.4	16.4	16.4	16.6	16.6	18.6
		Tube diameter - in.	5/16	5/16	5/16	5/16	5/16	5/16
		Number of Rows	1	1	1	2	2	2
		Fins per in.	22	22	22	22	22	22
Outdoor Coil Fan		Motor horsepower	1/6	1/6	1/6	1/4	1/4	1/3
		Diameter - in.	22	22	22	24	24	24
		Number of blades	4	4	4	3	3	3
Indoor Coil		Net Face Area - sq. ft.	4.4	4.4	4.4	6.8	6.8	6.8
		Tube Diameter - in.	5/16	3/8	3/8	3/8	3/8	3/8
		Number of Rows	3	3	3	3	3	3
		Fins per Inch	15	15	15	15	15	15
Indoor Blower		Blower wheel size dia. x width - in.	10 x 6	10 x 6	10 x 8	10 x 10	10 x 10	12 x 10
		Motor horsepower	1/3	1/2	1/2	3/4	3/4	1
Net weight of basic unit - lbs.			369	379	388	460	464	503
Shipping weight of basic unit (1 Pkg.) - lbs.			374	3.84	393	465	469	508
Electrical characteristics (60 Hz)			208/230V-1ph-60Hz					

ELECTRICAL DATA

Line voltage data - 60 Hz 1 phase	**208/230V**	**208/230V**	**208/230V**	**208/230V**	**208/230V**	**208/230V**
[3] Maximum overcurrent protection (MOCP) amps	25	35	35	40	50	60
[4] Minimum Circuit Ampacity (MCA)	17.4	22.7	26	28	35.1	43.6
Compressor — Rated load amps	10.9	14.1	14.7	16.2	21.9	27
Compressor — Locked rotor amps	59.3	67.9	75	113	110	150
Outdoor Coil Fan Motor — Full load amps	1.0	1.0	1.0	1.7	1.7	1.8
Outdoor Coil Fan Motor — Locked rotor amps	1.9	1.9	1.9	3.2	3.2	2.9
Indoor Blower Motor — Full load amps	2.8	4.1	4.1	6	6	6.3

NOTE - Shaded areas indicate AHRI 2023 Ratings.

[1] AHRI Certified to AHRI Standard 210/240:
Cooling Ratings - 95°F outdoor air temperature and 80°F db/67°F wb entering indoor coil air.
High Temperature Heating Ratings - 47°F db/43°F wb outdoor air temperature and 70°F entering indoor coil air.
Low Temperature Heating Ratings - 17°F db/15°F wb outdoor air temperature and 70°F entering indoor coil air.

[2] Sound Rating Number rated in accordance with test conditions included in AHRI Standard 270.

[3] HACR type circuit breaker or fuse.

[4] Refer to National or Canadian Electrical Code manual to determine wire, fuse and disconnect size requirements.

OPTIONAL ACCESSORIES - ORDER SEPARATELY

Item		Catalog No.	Unit Model No. 24	30	36	42	48	60
CONTROLS								
M30 Smart Wi-Fi Thermostat		**15Z69**	•	•	•	•	•	•
[1] Remote Outdoor Temperature Sensor		**X2658**	•	•	•	•	•	•
COOLING SYSTEM								
Compressor Crankcase Heater		**11X27**	•	•	•	•	•	•
Compressor Hard Start Kit		**10J42**	•	•	•	•	•	
		88M91						•
Compressor Timed-Off Control		**47J28**	•	•	•	•	•	•
Low Ambient Kit (40°F)		**21D20**	•	•	•	•	•	•
CABINET								
Base Rail Opening Closure Kit		**21J84**	•	•	•	•	•	•
Rectangular to Round Duct Adaptor Kits	Downflow - 14 in. dia.	**20X82**	•	•	•			
	- 14 in. dia.	**21D26**				•	•	•
	Horizontal - 14 in. dia.	**21J92**	•	•	•			
	- 14 in. dia.	**21D24**				•	•	•
	- 16 in. dia.	**22U78**				•	•	•
	- 18 in. dia.	**22U79**				•	•	•
ELECTRICAL								
Bottom Power Entry Kit		**21J78**	•	•	•	•	•	•
ELECTRIC HEAT								
Electric Heat Size - 208/240V-1ph	5 kW	**10W47**	•	•	•	•	•	•
	7.5 kW	**10W48**	•	•	•	•	•	•
	10 kW	**10W49**	•	•	•	•	•	•
	15 kW	**10W50**			•	•	•	•
	20 kW	**10W51**				•	•	•
SINGLE POINT POWER SUPPLY KITS (FOR ELECTRIC HEAT) - SIDE POWER ENTRY ONLY								
Single Point Power Kits	For 5 kW Electric Heat	**13W88**	•	•	•	•	•	•
	For 7.5 kW Electric Heat	**13W89**	•	•	•	•	•	•
	For 10 kW Electric Heat	**13W90**	•	•	•	•	•	•
	For 15-20 kW Electric Heat	**13W91**			•	•	•	•
INDOOR AIR QUALITY								
[2] Internal Filter Rack Kit (filters not furnished)	(1) 20 x 20 + (1) 14 x 20	**11U73**	•	•	•			
	(2) 20 x 20	**11U74**				•	•	•
ROOF CURBS								
Clip Curbs								
	8 in. height	**21J13**	•	•	•			
		21J17				•	•	•
	14 in. height	**21J14**	•	•	•			
		21J19				•	•	•
	18 in. height	**21J15**	•	•	•			
		21J20				•	•	•
	24 in. height	**21J16**	•	•	•			
		21J25				•	•	•
Adjustable Pitch Roof Curbs								
Welded Curbs		**22V54**	•	•	•			
		22V55				•	•	•
Clip Curbs		**21J26**	•	•	•			
		21U04				•	•	•
Strapping Kits for Roof Curbs								
Strapping Kit - Hurricane (Slab Mount)		**21J74**	•	•	•	•	•	•
Strapping Kit - Hurricane (Rail Mount)		**22C53**	•	•	•	•	•	•
Strapping Kit - Seismic		**21J75**	•	•	•	•	•	•

[1] Allows the thermostat to display outdoor temperature.

[2] Filters are not furnished and must be field provided.

ELECTRIC HEAT DATA

		Model No.	LRP14HP24		LRP14HP30		LRP14HP36	
		Voltage	208V	240V	208V	240V	208V	240V
[1] Maximum Overcurrent Protection (MOCP)	5 kW	Circuit 1	30	30	30	35	30	35
	7.5 kW	Circuit 1	40	45	40	45	40	45
	10 kW	Circuit 1	50	60	60	60	60	60
	15 kW	Circuit 1	- - -	- - -	- - -	- - -	60	60
		Circuit 2	- - -	- - -	- - -	- - -	25	30
[2] Minimum Circuit Ampacity (MCA)	5 kW	Circuit 1	26.1	29.5	27.7	31.2	27.7	31.2
	7.5 kW	Circuit 1	37.4	42.6	39	44.2	39	44.2
	10 kW	Circuit 1	48.6	55.6	50.3	57.2	50.3	57.2
	15 kW	Circuit 1	- - -	- - -	- - -	- - -	50.3	57.2
		Circuit 2	- - -	- - -	- - -	- - -	22.6	26
[1] Maximum Overcurrent Protection (MOCP) with Optional Single Point Power Supply		5 kW	45	45	50	50	50	60
		7.5 kW	60	60	60	70	60	70
		10 kW	70	70	70	80	80	80
		15 kW	- - -	- - -	- - -	- - -	100	110
[2] Minimum Circuit Ampacity (MCA) with Optional Single Point Power Supply		5 kW	40	43.5	45.3	48.7	48.6	52.1
		7.5 kW	51.3	56.5	56.9	61.8	59.9	65.1
		10 kW	62.6	69.5	67.8	74.8	71.2	78.1
		15 kW	- - -	- - -	- - -	- - -	93.7	104.1

		Model No.	LRP14HP42		LRP14HP48		LRP14HP60	
		Voltage	208V	240V	208V	240V	208V	240V
[1] Maximum Overcurrent Protection (MOCP)	5 kW	Circuit 1	35	35	35	35	35	35
	7.5 kW	Circuit 1	45	50	45	50	45	50
	10 kW	Circuit 1	60	60	60	60	60	60
	15 kW	Circuit 1	60	60	60	60	60	60
		Circuit 2	25	30	25	30	25	30
	20 kW	Circuit 1	60	60	60	60	60	60
		Circuit 2	50	60	50	60	50	60
[2] Minimum Circuit Ampacity (MCA)	5 kW	Circuit 1	30.1	33.5	30.1	33.5	30.4	33.9
	7.5 kW	Circuit 1	41.4	46.6	41.4	46.6	41.7	46.6
	10 kW	Circuit 1	52.6	59.6	52.6	59.6	53	60
	15 kW	Circuit 1	52.6	59.6	52.6	59.6	53	60
		Circuit 2	22.6	26	22.6	22	22.6	26
	20 kW	Circuit 1	50.6	59.6	52.6	59.6	53	60
		Circuit 2	45.1	52.1	45.1	52.1	45.1	52.1
[1] Maximum Overcurrent Protection (MOCP) with Optional Single Point Power Supply		5 kW	60	60	70	70	80	90
		7.5 kW	70	70	80	80	90	100
		10 kW	80	90	90	90	100	110
		15 kW	100	110	110	125	125	125
		20 kW	125	150	150	150	150	150
[2] Minimum Circuit Ampacity (MCA) with Optional Single Point Power Supply		5 kW	50.6	54	57.7	61.2	66.2	69.7
		7.5 kW	61.9	67.1	69	74.2	77.5	82.7
		10 kW	73.1	80.1	80.3	87.2	88.8	95.7
		15 kW	95.7	106.1	102.8	113.3	111.3	121.8
		20 kW	118.3	132.2	125.4	139.3	133.9	147.8

NOTE - All units have a minimum Short Circuit Current Rating (SCCR) of 5000 amps.

NOTE - Circuit 1 Minimum Circuit Ampacity includes the Blower Motor Full Load Amps.

NOTE- Extremes of operating range are plus and minus 10% of line voltage.

[1] HACR type breaker or fuse.

[2] Refer to National or Canadian Electrical Code manual to determine wire, fuse and disconnect size requirements.

ELECTRIC HEAT CAPACITIES

Input Voltage	5 kW			7.5 kW			10 kW			15 kW			20 kW		
	No of Steps	kW Input	KBtuh Output	No of Steps	kW Input	KBtuh Output	No of Steps	kW Input	KBtuh Output	No of Steps	kW Input	KBtuh Output	No of Steps	kW Input	KBtuh Output
208	1	3.8	12.8	1	5.6	19.2	1	7.5	25.6	1	11.2	38.2	1	15	51.2
220	1	4.2	14.3	1	6.3	21.5	1	8.4	28.7	1	12.6	43	1	16.8	57.3
230	1	4.6	15.7	1	6.9	23.5	1	9.2	31.3	1	13.8	47	1	18.4	62.7
240	1	5	17.1	1	7.5	25.6	1	10	34.1	1	15	51.2	1	20	68.2

FIELD WIRING

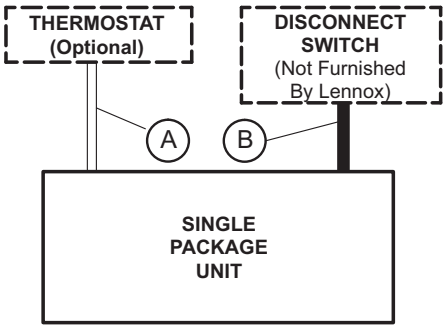

A − Five Wire Low Voltage (Electronic)
B − Two Wire Power (See Electrical Data Table)

If multiple disconnects are used on units with electric heat; there must be two−wire power provided for each disconnect

− Field Wiring Not Furnished −

INSTALLATION CLEARANCES

	in.	mm
Front (heat exchanger access)	24	610
Right Side (blower access)	24	610
Left Side (evaporator coil access)	24	610
Back	0	0
Top	48	1219

COOLING RATINGS - 2017

Model	Indoor Temp DB/WB ºF	Outdoor Temperature - DB														
		65°F			82°F			95°F			105°F			115°F		
		Btuh Output	S/T	kW Input	Btuh Output	S/T	kW Input	Btuh Output	S/T	kW Input	Btuh Output	S/T	kW Input	Btuh Output	S/T	kW Input
LRP14HP24	85/72	28,600	0.67	1.35	26,700	0.69	1.62	25,300	0.73	1.87	23,900	0.75	2.09	22,400	0.78	2.35
	80/67	26,400	0.73	1.36	24,700	0.76	1.63	22,600	0.79	1.87	22,000	0.82	2.10	20,600	0.85	2.36
	75/63	24,600	0.76	1.36	23,000	0.78	1.63	21,700	0.82	1.88	20,500	0.84	2.10	19,100	0.87	2.36
	75/57	23,000	1.00	1.37	21,600	1.00	1.64	20,600	1.00	1.88	19,600	1.00	2.11	18,500	1.00	2.37
LRP14HP30	85/72	35,700	0.68	1.79	33,400	0.70	2.10	31,400	0.73	2.39	29,600	0.75	2.65	27,700	0.78	2.96
	80/67	32,900	0.74	1.78	30,800	0.76	2.10	28,600	0.80	2.38	27,200	0.82	2.64	25,400	0.85	2.95
	75/63	30,800	0.76	1.78	28,700	0.79	2.09	26,900	0.82	2.38	25,400	0.84	2.64	23,700	0.87	2.95
	75/57	28,600	1.00	1.77	26,900	1.00	2.09	25,400	1.00	2.37	24,200	1.00	2.64	22,800	1.00	2.94
LRP14HP36	85/72	44,200	0.67	2.21	40,700	0.70	2.62	37,900	0.72	2.97	35,600	0.74	3.29	33,000	0.77	3.66
	80/67	40,600	0.73	2.16	37,300	0.76	2.58	34,000	0.79	2.92	32,500	0.82	3.24	30,100	0.85	3.61
	75/63	37,700	0.76	2.13	34,700	0.78	2.55	32,200	0.81	2.89	30,200	0.84	3.21	27,900	0.87	3.58
	75/57	34,700	1.00	2.11	32,300	1.00	2.52	30,400	1.00	2.87	28,700	1.00	3.19	26,900	1.00	3.57
LRP14HP42	85/72	48,800	0.67	2.25	46,600	0.69	2.89	43,800	0.72	3.27	41,100	0.74	3.59	38,200	0.77	3.94
	80/67	44,600	0.73	2.25	42,800	0.75	2.90	40,000	0.79	3.29	37,700	0.81	3.62	35,000	0.84	3.99
	75/63	41,400	0.76	2.25	39,800	0.77	2.90	37,400	0.81	3.30	35,100	0.83	3.63	32,600	0.87	4.01
	75/57	38,300	1.00	2.24	37,100	1.00	2.90	35,100	1.00	3.30	33,300	1.00	3.63	31,300	1.00	4.02
LRP14HP48	85/72	56,500	0.67	2.81	52,800	0.69	3.31	50,000	0.72	3.79	47,200	0.74	4.22	44,100	0.77	4.68
	80/67	52,100	0.73	2.82	48,600	0.75	3.30	46,000	0.79	3.78	43,500	0.81	4.19	40,500	0.84	4.67
	75/63	48,600	0.75	2.82	45,400	0.78	3.30	42,900	0.81	3.76	40,500	0.83	4.19	37,800	0.86	4.66
	75/57	45,100	1.00	2.82	42,400	1.00	3.30	40,400	1.00	3.76	38,500	1.00	4.18	36,300	1.00	4.66
LRP14HP60	85/72	69,200	0.65	3.49	64,500	0.68	4.10	60,400	0.70	4.67	57,100	0.71	5.20	53,300	0.74	5.79
	80/67	63,900	0.71	3.48	59,600	0.74	4.08	57,000	0.76	4.66	52,600	0.78	5.17	49,100	0.81	5.76
	75/63	59,800	0.74	3.47	55,600	0.76	4.06	52,100	0.78	4.63	49,200	0.80	5.15	45,800	0.83	5.74
	75/57	54,800	0.99	3.46	51,400	1.00	4.05	48,600	1.00	4.61	46,100	1.00	5.13	43,500	1.00	5.72

HEATING RATINGS - 2017

Model	Outdoor Temp - DB/WB ºF									
	0/0		17/15		35/33		47/43		62/56	
	Btuh Output	kW Input	Btuh Output	kW Input	Btuh Output	kW Input	Btuh Output	kW Input	Btuh Output	kW Input
LRP14HP24	8,800	1.69	12,300	1.73	17,500	1.79	22,000	1.83	26,100	1.88
LRP14HP30	11,000	1.62	15,900	1.68	20,900	1.82	27,000	1.91	31,000	2.02
LRP14HP36	13,000	2.29	20,000	2.42	26,600	2.72	32,400	2.93	39,500	3.18
LRP14HP42	17,500	3.27	23,600	3.00	33,100	3.17	39,000	3.28	49,500	3.41
LRP14HP48	20,700	3.40	27,000	3.46	39,500	3.66	45,000	3.79	56,800	3.96
LRP14HP60	23,700	4.56	33,600	4.62	47,300	4.64	56,000	4.66	71,500	4.68

COOLING RATINGS - 2023

Model	Indoor Temp DB/WB ºF	Outdoor Temperature - DB														
		65°F			82°F			95°F			105°F			115°F		
		Btuh Output	S/T	kW Input	Btuh Output	S/T	kW Input	Btuh Output	S/T	kW Input	Btuh Output	S/T	kW Input	Btuh Output	S/T	kW Input
LRP14HP24	85/72	28,400	0.67	1.42	26,500	0.69	1.69	25,100	0.72	1.94	23,700	0.75	2.16	22,200	0.77	2.42
	80/67	26,200	0.73	1.43	24,400	0.75	1.70	23,000	0.79	1.94	21,800	0.82	2.17	20,400	0.85	2.43
	75/63	24,400	0.75	1.43	22,800	0.78	1.70	21,500	0.82	1.95	20,300	0.84	2.17	18,900	0.87	2.43
	75/57	22,700	1.00	1.44	21,400	1.00	1.71	20,400	1.00	1.95	19,400	1.00	2.17	18,300	1.00	2.44
LRP14HP30	85/72	35,500	0.68	1.86	33,100	0.70	2.17	31,100	0.73	2.46	29,400	0.75	2.72	27,400	0.78	3.03
	80/67	32,700	0.74	1.85	30,500	0.76	2.17	28,600	0.79	2.45	27,000	0.82	2.71	25,200	0.85	3.02
	75/63	30,600	0.76	1.84	28,500	0.79	2.16	26,700	0.82	2.45	25,100	0.84	2.71	23,400	0.87	3.01
	75/57	28,400	1.00	1.84	26,700	1.00	2.16	25,200	1.00	2.44	24,000	1.00	2.70	22,600	1.00	3.01
LRP14HP36	85/72	43,800	0.67	2.32	40,400	0.69	2.73	37,600	0.72	3.08	35,200	0.74	3.39	32,600	0.77	3.77
	80/67	40,200	0.73	2.27	36,900	0.76	2.69	34,000	0.79	3.03	32,200	0.81	3.35	29,800	0.85	3.72
	75/63	37,300	0.75	2.24	34,300	0.78	2.66	31,900	0.81	3.00	29,800	0.84	3.32	27,600	0.87	3.69
	75/57	34,300	1.00	2.22	31,900	1.00	2.63	30,000	1.00	2.98	28,400	1.00	3.30	26,600	1.00	3.68
LRP14HP42	85/72	48,500	0.67	2.35	46,300	0.69	2.99	43,500	0.72	3.37	40,800	0.74	3.68	37,900	0.77	4.04
	80/67	44,300	0.73	2.34	42,500	0.75	3.00	39,500	0.78	3.39	37,400	0.81	3.71	34,700	0.84	4.08
	75/63	41,100	0.76	2.34	39,500	0.77	3.00	37,100	0.81	3.40	34,800	0.83	3.73	32,300	0.86	4.10
	75/57	38,000	1.00	2.34	36,800	1.00	3.00	34,800	1.00	3.40	33,000	1.00	3.73	31,000	1.00	4.11
LRP14HP48	85/72	56,200	0.67	2.90	52,500	0.69	3.40	49,700	0.72	3.88	46,900	0.74	4.31	43,800	0.77	4.77
	80/67	51,800	0.73	2.91	48,300	0.75	3.40	45,500	0.78	3.87	43,200	0.81	4.28	40,200	0.84	4.76
	75/63	48,300	0.75	2.91	45,100	0.77	3.39	42,600	0.81	3.85	40,200	0.83	4.28	37,500	0.86	4.75
	75/57	44,800	1.00	2.91	42,100	1.00	3.39	40,100	1.00	3.85	38,200	1.00	4.27	36,000	1.00	4.75
LRP14HP60	85/72	69,100	0.65	3.52	64,400	0.68	4.13	60,300	0.70	4.71	57,000	0.71	5.23	53,200	0.74	5.82
	80/67	63,800	0.71	3.51	59,400	0.74	4.11	56,000	0.76	4.69	52,500	0.78	5.20	49,000	0.81	5.80
	75/63	59,700	0.74	3.51	55,500	0.76	4.09	52,000	0.78	4.67	49,000	0.80	5.18	45,700	0.83	5.77
	75/57	54,700	0.99	3.49	51,300	1.00	4.08	48,500	1.00	4.65	46,000	1.00	5.16	43,400	1.00	5.76

HEATING RATINGS - 2023

Model	Outdoor Temp - DB/WB ºF									
	0/0		17/15		35/33		47/43		62/56	
	Btuh Output	kW Input	Btuh Output	kW Input	Btuh Output	kW Input	Btuh Output	kW Input	Btuh Output	kW Input
LRP14HP24	8,800	1.76	11,900	1.81	17,800	1.86	21,600	1.90	26,700	1.95
LRP14HP30	11,000	1.92	15,000	1.98	21,600	2.04	25,800	2.08	31,500	2.12
LRP14HP36	13,000	2.40	18,300	2.53	27,100	2.64	32,600	2.72	40,100	2.81
LRP14HP42	17,500	3.38	22,500	3.11	33,300	3.27	40,000	3.38	49,500	3.51
LRP14HP48	20,700	3.50	28,200	3.57	39,700	3.77	47,000	3.91	57,000	4.07
LRP14HP60	23,700	4.58	33,300	4.62	48,200	4.95	58,000	5.18	72,800	5.46

BLOWER DATA

Model No.	Blower Tap	Air Volume (cfm) at Various External Static Pressures - in. w.g.									
		0.1	0.2	0.3	0.4	0.5	0.6	0.7	0.8	0.9	1.0
LRP14HP24	Tap 1 (Fan Only)	680	590	550	450	380	- - -	- - -	- - -	- - -	- - -
	Tap 2 (Low Cooling)	890	830	800	760	710	680	640	600	- - -	- - -
	Tap 3 (High Cooling)	1000	965	930	900	870	835	805	770	740	695
LRP14HP30	Tap 1 (Fan Only)	680	640	600	570	530	490	- - -	- - -	- - -	- - -
	Tap 2 (Low Cooling)	1100	1070	1050	1020	990	960	930	900	- - -	- - -
	Tap 3 (High Cooling)	1195	1160	1130	1110	1070	1040	1005	970	935	875
LRP14HP36	Tap 1 (Fan Only)	860	810	760	710	640	590	550	490	- - -	- - -
	Tap 2 (Low Cooling)	1300	1265	1235	1200	1165	1125	1085	1040	1000	885
	Tap 3 (High Cooling)	1450	1425	1395	1350	1320	1285	1250	1165	1045	860
LRP14HP42	Tap 1 (Fan Only)	800	720	640	550	475	390	310	- - -	- - -	- - -
	Tap 2 (Low Cooling)	1470	1410	1360	1300	1260	1210	1155	1095	1000	940
	Tap 3 (High Cooling)	1580	1540	1505	1460	1415	1370	1320	1235	1135	1060
LRP14HP48	Tap 1 (Fan Only)	1145	1075	1000	930	850	790	740	670	570	490
	Tap 2 (Low Cooling)	1675	1630	1600	1540	1490	1440	1390	1300	1230	1125
	Tap 3 (High Cooling)	1840	1800	1760	1720	1670	1615	1555	1500	- - -	- - -
LRP14HP60	Tap 1 (Fan Only)	1400	1320	1260	1200	1120	1060	980	900	- - -	- - -
	Tap 2 (Low Cooling)	1920	1870	1820	1770	1720	1670	1450	1360	- - -	- - -
	Tap 3 (High Cooling)	1970	1915	1865	1820	1770	1725	1685	1640	1595	1540

NOTE - All air data is measured external to unit with dry coil and without air filters.

ACCESSORY AIR RESISTANCE DATA - in. w.g.

Air Volume cfm	Rectangular to Round Duct Adaptor Kits					
	Downflow		Horizontal			
	14 in. Diameter		14 in. Diameter		16 in. Diameter	18 in. Diameter
	24, 30, 36	42, 48, 60	24, 30, 36	42, 48, 60	42, 48, 60	42, 48, 60
500	0.03	- - -	0.04	- - -	- - -	- - -
600	0.05	- - -	0.07	- - -	- - -	- - -
700	0.08	0.13	0.08	0.13	- - -	- - -
800	0.10	0.17	0.12	0.16	- - -	- - -
900	0.12	0.21	0.15	0.21	- - -	- - -
1000	0.17	0.24	0.19	0.25	0.11	0.03
1100	0.18	0.30	0.23	0.30	0.11	0.03
1200	0.20	0.36	0.29	0.37	0.13	0.03
1300	0.26	0.43	0.31	0.43	0.17	0.03
1400	0.31	0.50	0.39	0.51	0.20	0.03
1500	- - -	0.57	- - -	0.57	0.21	0.05
1600	- - -	0.63	- - -	0.65	0.26	0.05
1700	- - -	0.71	- - -	0.72	0.30	0.06
1800	- - -	0.80	- - -	0.81	0.30	0.06
1900	- - -	0.91	- - -	0.90	0.40	0.06
2000	- - -	0.99	- - -	1.01	0.41	0.06

DIMENSIONS UNIT

Size	CORNER WEIGHTS								CENTER OF GRAVITY			
	AA		BB		CC		DD		EE		FF	
	lbs.	kg	lbs.	kg	lbs.	kg	lbs.	kg	in.	mm	in.	mm
24	87	39	96	44	105	48	95	43	21	533	21-1/2	546
30	89	40	99	45	97	44	107	49	21	533	21-1/2	546
36	91	41	101	46	110	50	100	45	21	533	21-1/2	546
42	116	53	126	57	137	62	126	57	25-1/4	641	21-1/2	546
48	117	53	128	58	138	63	127	58	25-1/4	641	21-1/2	546
60	122	55	133	60	144	65	133	60	25-/14	641	21-1/2	546

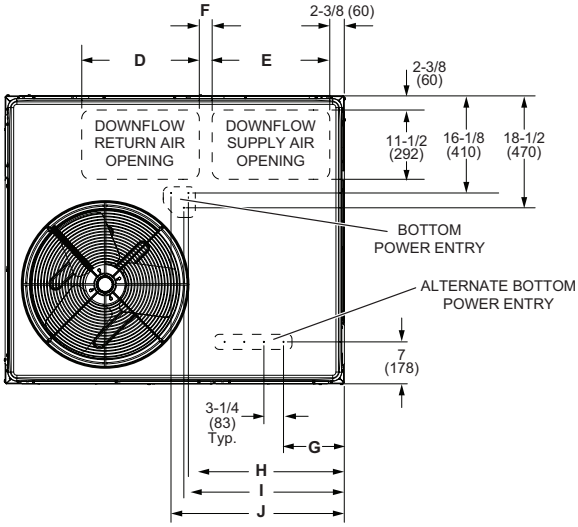

TOP VIEW (Base)

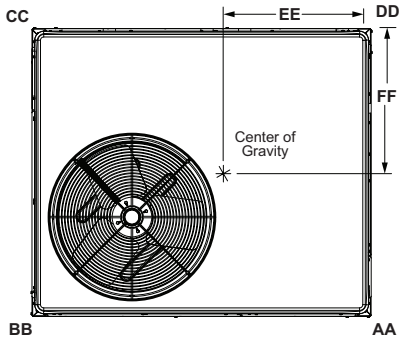

TOP VIEW
(Corner Weight and Center of Gravity)

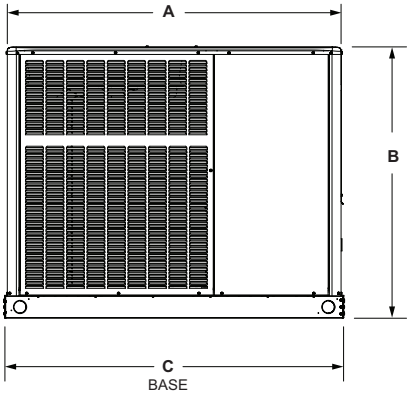

FRONT VIEW

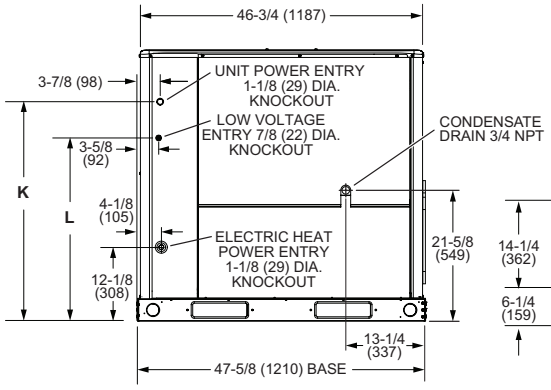

RIGHT SIDE VIEW

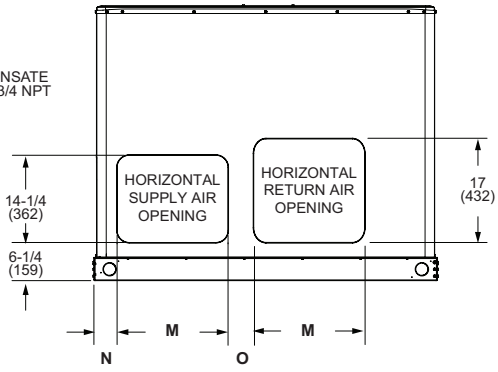

BACK VIEW

Size	A		B		C		D		E		F		G	
	in.	mm	in.	mm	in.	mm	in.	mm	in.	mm	in.	mm	in.	mm
24, 30, 36	47-5/8	1210	40-7/8	1038	47-5/8	1210	16-3/4	425	14	356	2	51	20-1/4	514
42, 48, 60	55-1/4	1403	44-7/8	1140	56-1/8	1426	19-1/2	495	19-1/2	495	2-1/8	54	25-7/8	657

Size	H		I		J		K		L		M		N	
	in.	mm	in.	mm	in.	mm	in.	mm	in.	mm	in.	mm	in.	mm
24, 30, 36	21	533	23-1/4	591	32-1/4	819	26-1/4	667	13-1/2	343	3-1/8	79	5-7/8	149
42, 48, 60	26-1/2	673	26-3/4	679	36-1/4	921	30-1/4	768	18-1/4	463	3-3/4	95	4-3/8	111

CLIP CURB

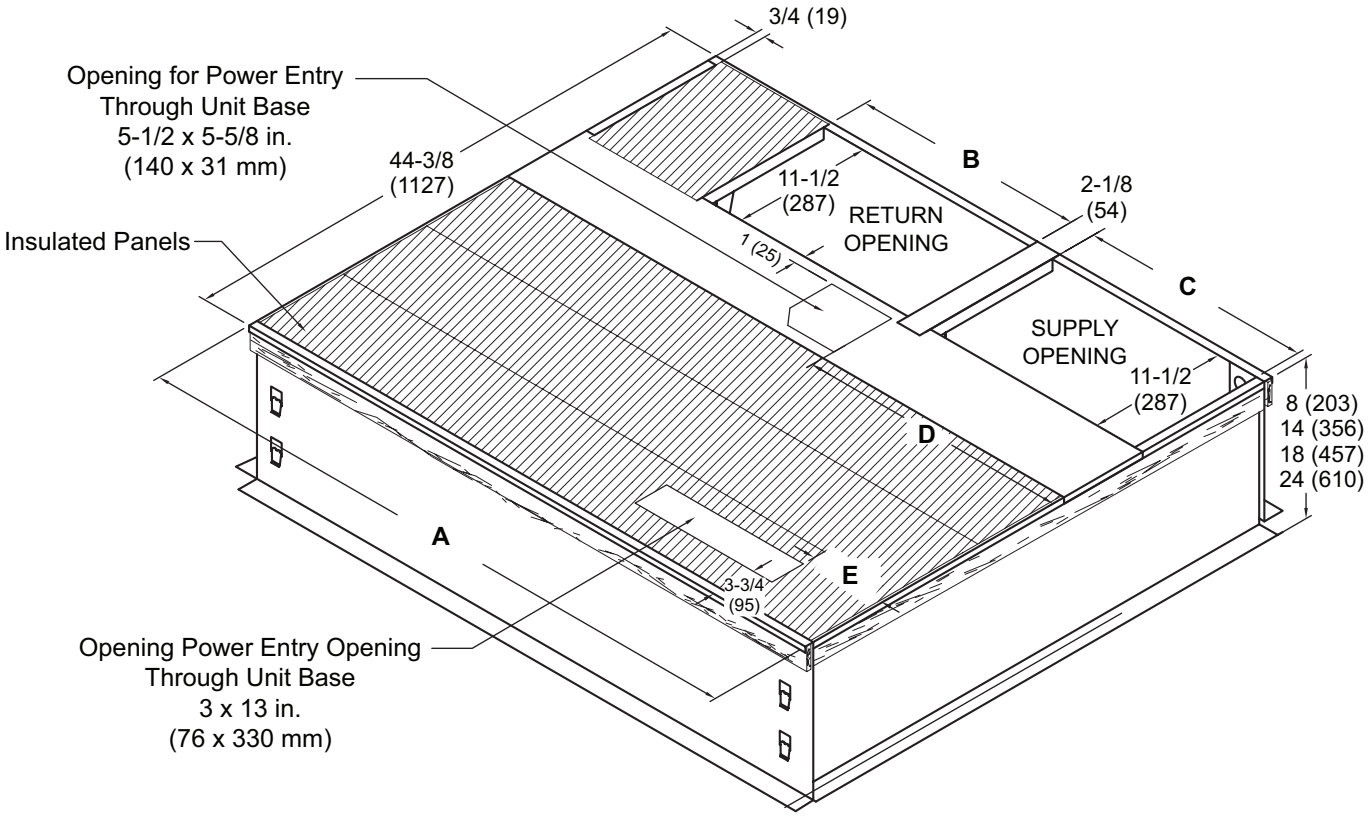

NOTE - Roof deck may be omitted within confines of curb.

TYPICAL FLASHING DETAIL FOR ROOF CURB

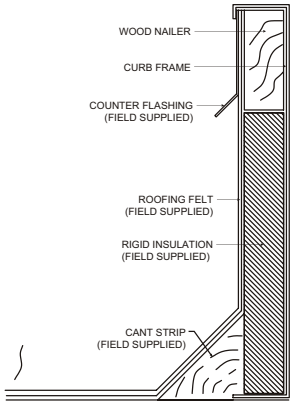

DETAIL ROOF CURB

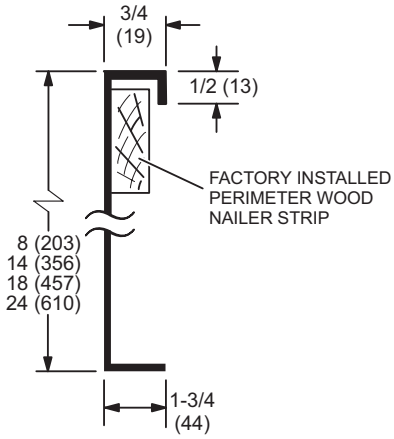

Usage	A		B		C		D		E	
	in.	mm	in.	mm	in.	mm	in.	mm	in.	mm
24, 30, 36	44-3/8	1127	16-7/8	429	13-7/8	352	17-1/4	438	1-1/4	32
42, 48, 60	52-7/8	1343	19-1/2	380	19-1/2	352	23-1/8	587	7	178

ADJUSTABLE PITCH ROOF WELDED CURB

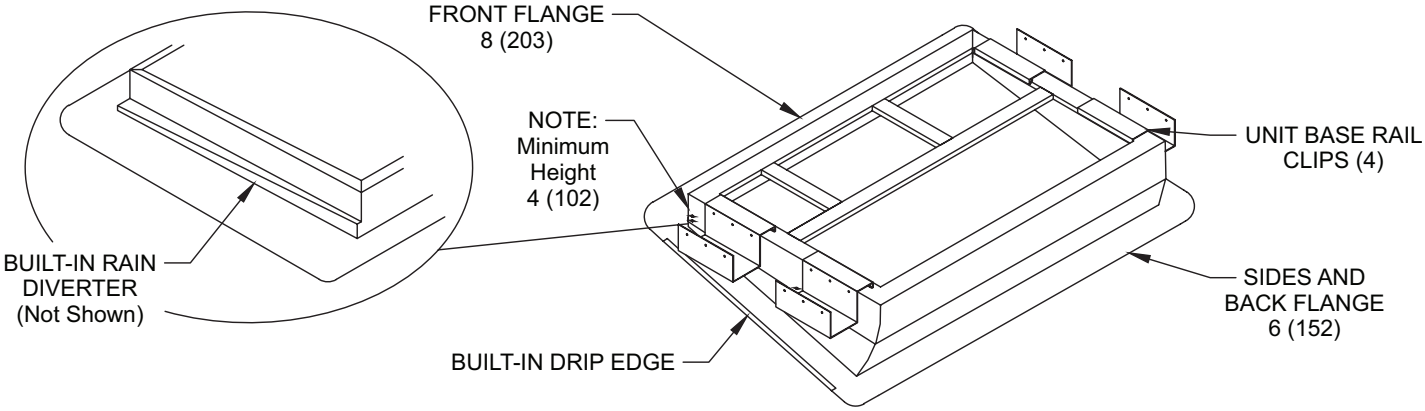

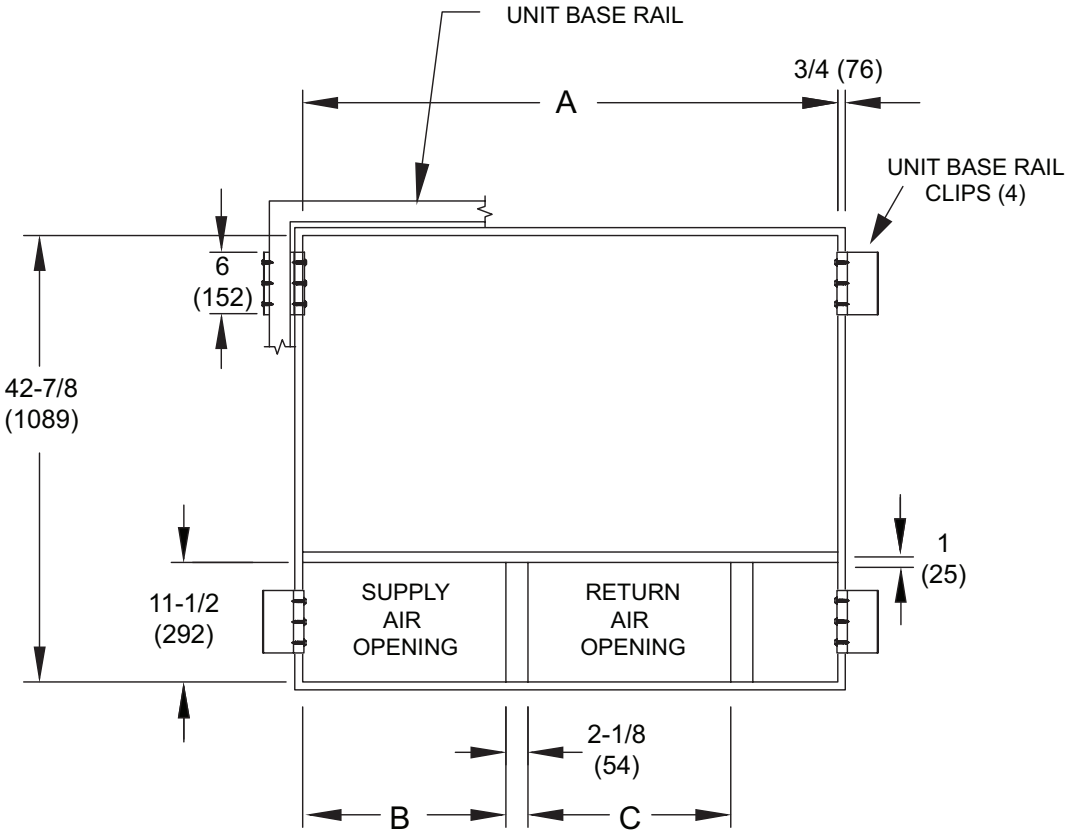

Usage	A		B		C	
	in.	mm	in.	mm	in.	mm
24, 30, 36	42-7/8	1089	13-7/8	352	16-7/8	429
42, 48, 60	51-3/8	1305	19-1/2	495	19-1/2	495

ADJUSTABLE PITCH ROOF CLIP CURB

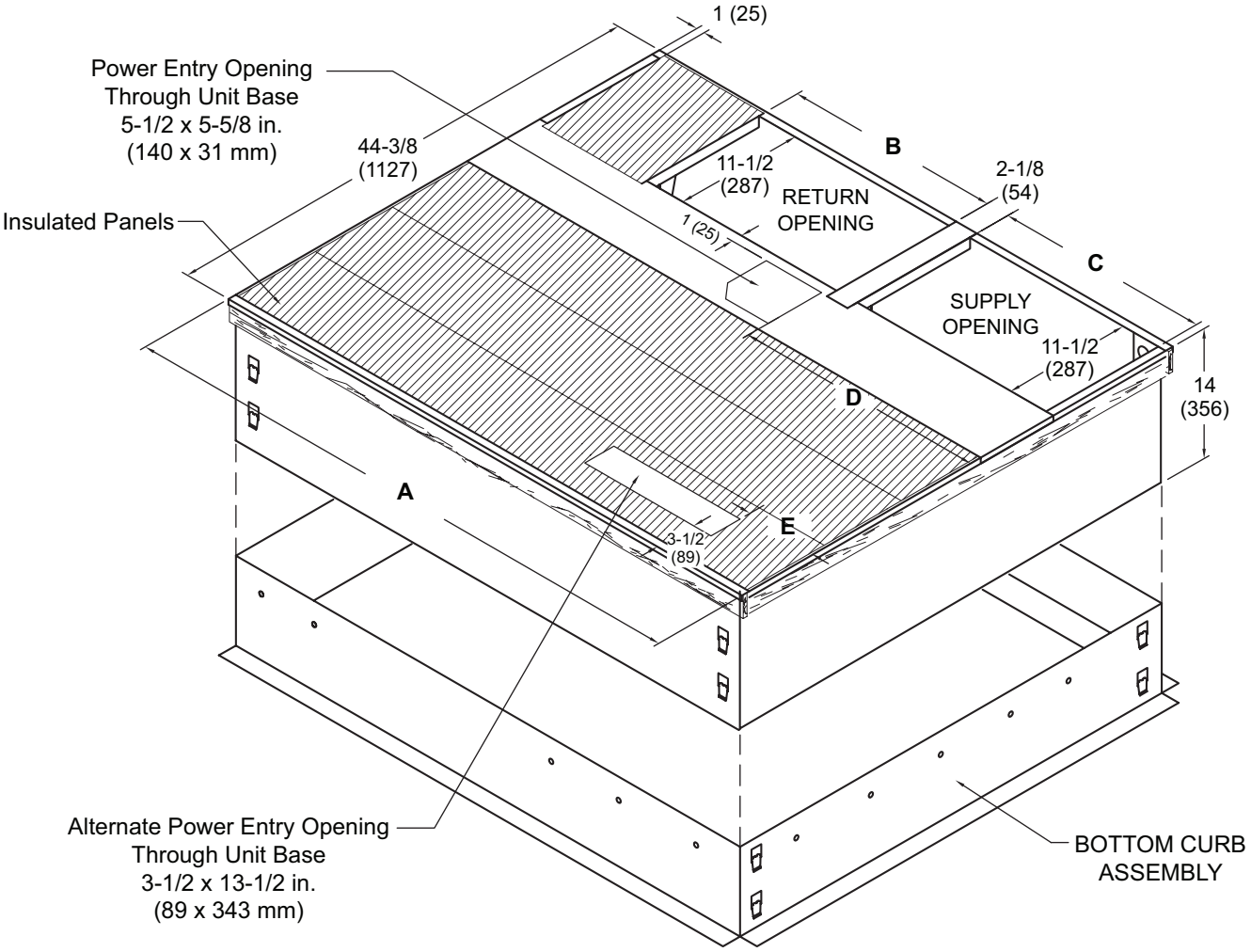

NOTE - Roof deck may be omitted within confines of curb.

TYPICAL FLASHING DETAIL FOR ROOF CURB

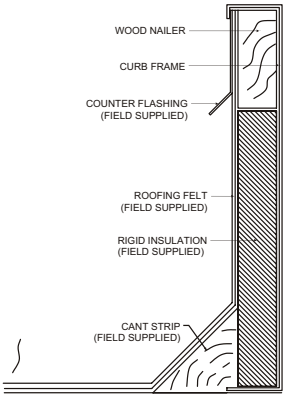

DETAIL ROOF CURB

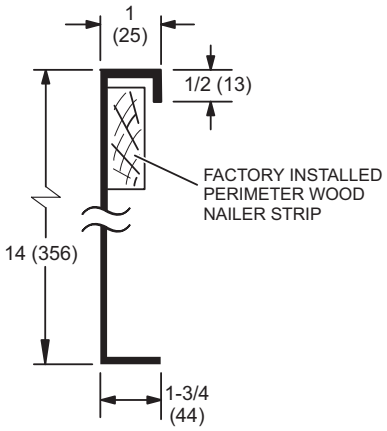

Usage	A		B		C		D		E	
	in.	mm	in.	mm	in.	mm	in.	mm	in.	mm
24, 30, 36	44-3/8	1127	16-7/8	429	13-7/8	352	17-1/4	438	1-1/4	32
42, 48, 60	52-7/8	1343	19-1/2	380	19-1/2	352	23-1/8	587	7	178

REVISIONS

Sections	Description of Change
Blower Data	Updated.
Electrical Data	Updated.
Cooling/Heating Ratings	Updated.
Specifications	Updated cooling/heating performance, sound data, refrigerant charge and weights

Visit us at www.Lennox.com
For the latest technical information, www.LennoxPros.com
Contact us at 1-800-4-LENNOX

NOTE - Due to Lennox' ongoing commitment to quality, Specifications, Ratings and Dimensions subject to change without notice and without incurring liability.
Improper installation, adjustment, alteration, service or maintenance can cause property damage or personal injury.
Installation and service must be performed by a qualified installer and servicing agency.

©2023 Lennox Industries, Inc.