© 2026 Lennox Industries Inc.
Dallas, Texas USA

# INSTALLATION INSTRUCTIONS ML296UHVK

**MERIT® SERIES GAS FURNACE**
**UPFLOW / HORIZONTAL AIR DISCHARGE**

508520-01
06/2026

**THIS MANUAL MUST BE LEFT WITH THE HOMEOWNER FOR FUTURE REFERENCE**

This is a safety alert symbol and should never be ignored. When you see this symbol on labels or in manuals, be alert to the potential for personal injury or death.

## WARNING

Improper installation, adjustment, alteration, service or maintenance can cause property damage, personal injury or loss of life. Installation and service must be performed by a licensed professional HVAC installer (or equivalent), service agency or the gas supplier.

## WARNING

**This furnace is equipped with an ignition control factory enabled for use with Lennox A2L refrigerant systems. Disabling the refrigerant detection functionality on A2L system is prohibited by safety codes. Refer to furnace installation instructions for non-A2L and non-Lennox refrigerant system setup.**

## CAUTION

As with any mechanical equipment, contact with sharp sheet metal edges can result in personal injury. Take care while handling this equipment and wear gloves and protective clothing.

**Contents**

Unit Dimensions - inches (mm) ..... 2
ML296UHVK Gas Furnace ..... 3
Shipping and Packing List ..... 3
Safety ..... 3
Use of Furnace as a Construction Heater ..... 4
General ..... 5
Combustion, Dilution, Ventilation Air ..... 5
Setting Equipment ..... 8
Filters ..... 13
Duct System ..... 13
Pipe Fittings Specifications ..... 14
Joint Cementing Procedure ..... 15
Venting Practices ..... 16
Gas Piping ..... 36
Electrical ..... 38
Ignition Control ..... 41
Low GWP Application ..... 53
Unit Start-Up ..... 56
Gas Pressure Measurement ..... 57
Proper Combustion ..... 58
High Altitude ..... 58
Repair Parts List ..... 60
Sequence of Operation ..... 61
Service ..... 63
Blower Data ..... 66
Start Up & Performance Check List ..... 68



0626
508520-01

## Unit Dimensions - inches (mm)

[1] NOTE - 60C size units that require air volumes over 1800 cfm must have one of the following:
1. Single side return air and Optional Return Air Base with transition that must accommodate required 20 x 25 x 1 inch (508 x 635 x 25 mm) air filter to maintain proper velocity.
2. Bottom return air.
3. Return air from both sides.
4. Bottom and one side return air.

See Blower Performance Tables for additional information.

[2] Optional Side Return Air Filter Kit is not for use with the Optional Return Air Base.

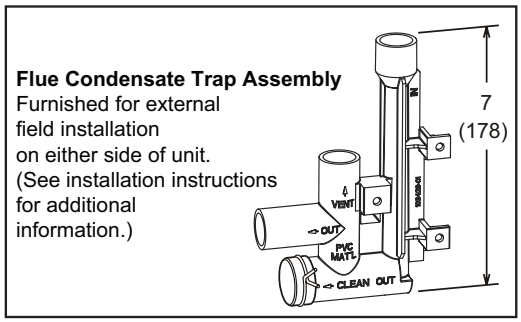


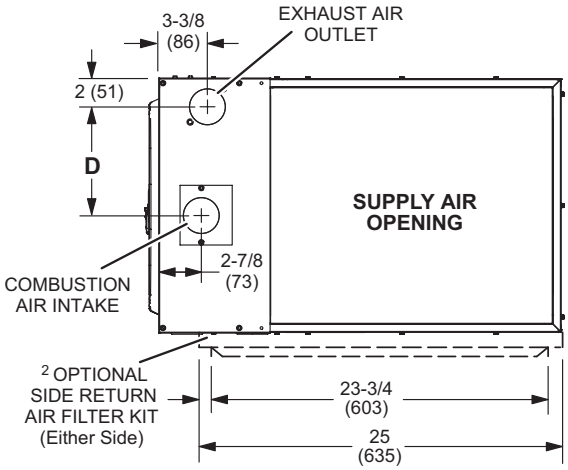


**TOP VIEW**

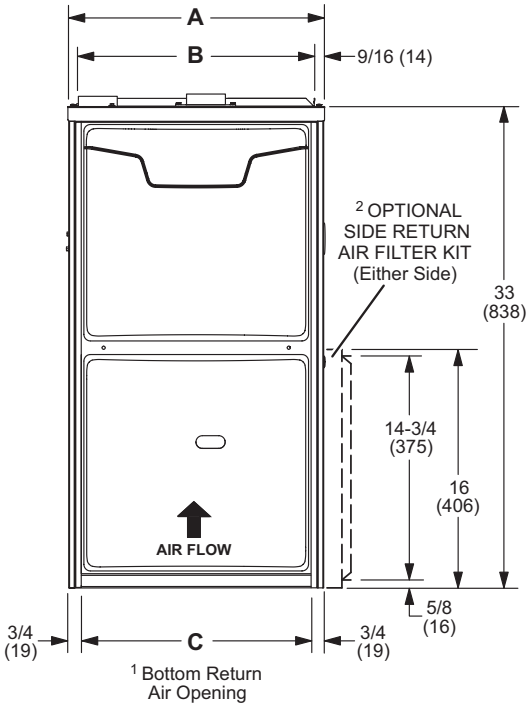


**FRONT VIEW**

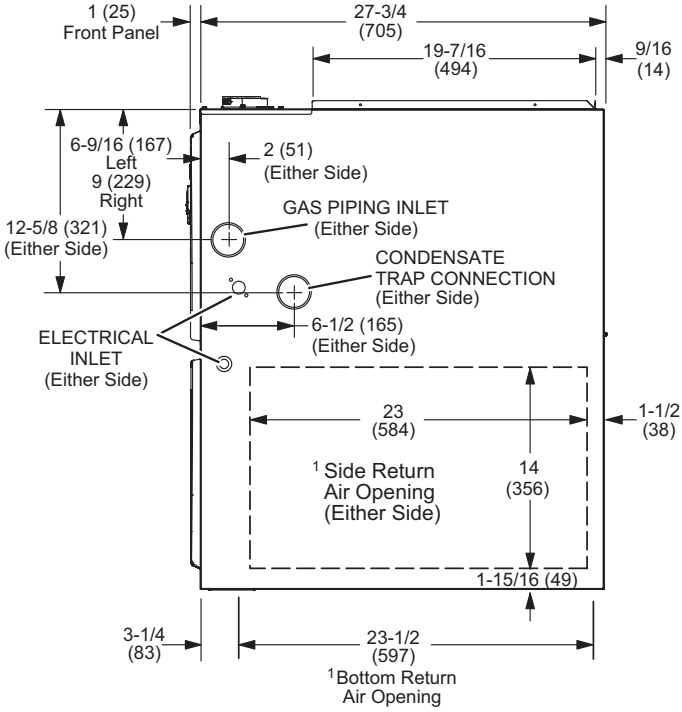


**SIDE VIEW**

| Model | A | B | C | D |
|---|---|---|---|---|
| ML296UH045XV36BK<br>ML296UH070XV36BK | 17−1/2 in 446 mm | 16−3/8 in 416 mm | 16 in 406 mm | 7−5/8 in 194 mm |
| ML296UH090XV48CK<br>ML296UH110XV60CK | 21 in 533 mm | 19−7/8 in 505 mm | 19−1/2 in 495 mm | 9−3/8 in 238 mm |

## ML296UHVK Gas Furnace

The ML296UHVK Category IV gas furnace is shipped ready for installation in the upflow or horizontal position. The furnace is shipped with the bottom panel in place. The bottom panel must be removed if the unit is to be installed in horizontal or upflow applications with bottom return air.

**The ML296UHVK can be installed as either a Direct Vent or a Non-Direct Vent gas central furnace.**

The furnace is equipped for installation in natural gas applications. A conversion kit (ordered separately) is required for use in propane/LP gas applications.

***NOTE -*** *In Direct Vent installations, combustion air is taken from outdoors and flue gases are discharged outdoors. In Non-Direct Vent installations, combustion air is taken from indoors or ventilated attic or crawlspace and flue gases are discharged outdoors. See FIGURE 1 and FIGURE 2 for applications involving roof termination.*

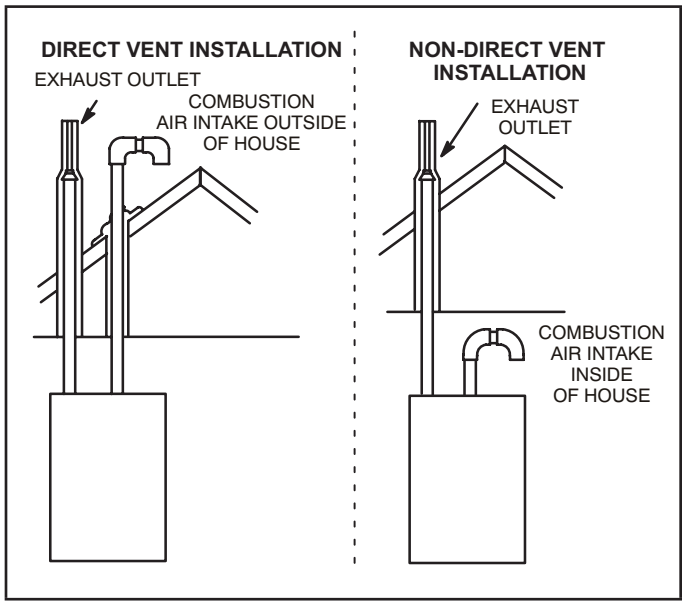


**FIGURE 1**

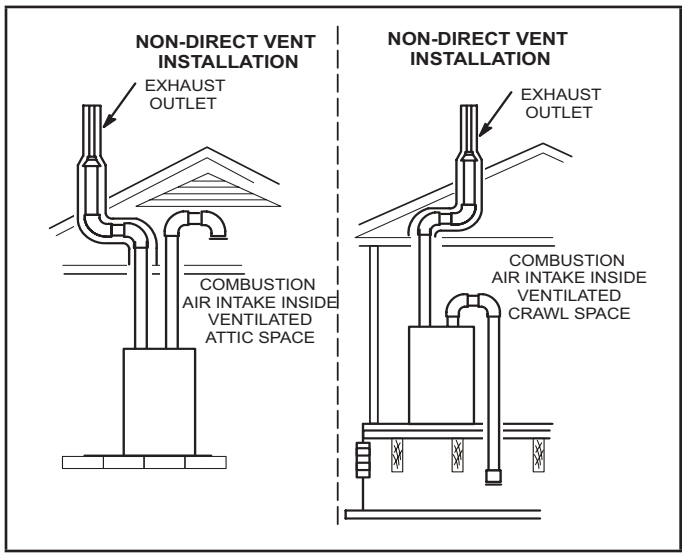


**FIGURE 2**

## Shipping and Packing List

**Package 1 of 1 contains**

1 - Assembled ML296UHVK unit

1 - Bag assembly containing the following:

- 1 - Snap bushing
- 1 - Snap plug
- 1 - Wire tie
- 1 - Condensate trap
- 1 - Condensate trap cap
- 1 - Condensate trap clamp
- 1 - 2” diameter debris screen
- 1 - 3/4” Threaded street elbow

Check equipment for shipping damage. If you find any damage, immediately contact the last carrier.

The following items may also be ordered separately:

1 - Thermostat

1 - LP/Propane changeover kit

1 - Return air base kit

1 - Horizontal suspension kit

1 - High altitude pressure switch

1 -Sensor Kit (field installed)

## Safety Information

**⚠ CAUTION**

As with any mechanical equipment, contact with sharp sheet metal edges can result in personal injury. Take care while handling this equipment and wear gloves and protective clothing.

**⚠ DANGER**

Danger of explosion.

There are circumstances in which odorant used with LP/propane gas can lose its scent. In case of a leak, LP/propane gas will settle close to the floor and may be difficult to smell. An LP/propane leak detector should be installed in all LP applications.

Use only the type of gas approved for use with this furnace. Refer to unit nameplate.

ML296UHVK units are CSA International certified to ANSI Z21.47 and CSA 2.3 standards.

### Building Codes

In the USA, installation of gas furnaces must conform with local building codes. In the absence of local codes, units must be installed according to the current National Fuel Gas Code (ANSI-Z223.1/NFPA 54). The National Fuel Gas Code is available from the following address:

American National Standards Institute, Inc.

11 West 42nd Street

New York, NY 10036

In Canada, installation must conform with current National Standard of Canada CSA-B149 Natural Gas and Propane Installation Codes, local plumbing or waste water codes and other applicable local codes.

In order to ensure proper unit operation in non-direct vent applications, combustion and ventilation air supply must be provided according to the current National Fuel Gas Code or CSA-B149 standard.

Installation Locations

This furnace is CSA International certified for installation clearances to combustible material as listed on the unit nameplate and in the table in TABLE 12. Accessibility and service clearances must take precedence over fire protection clearances.

***NOTE -*** *For installation on combustible floors, the furnace shall not be installed directly on carpeting, tile, or other combustible material other than wood flooring.*

For installation in a residential garage, the furnace must be installed so that the burner(s) and the ignition source are located no less than 18 inches (457 mm) above the floor. The furnace must be located or protected to avoid physical damage by vehicles. When a furnace is installed in a public garage, hangar, or other building that has a hazardous atmosphere, the furnace must be installed according to recommended good practice requirements and current National Fuel Gas Code or CSA B149 standards.

***NOTE -*** *Furnace must be adjusted to obtain a temperature rise within the range specified on the unit nameplate. Failure to do so may cause erratic limit operation and premature heat exchanger failure.*

This ML296UHVK furnace must be installed so that its electrical components are protected from water.

**Installed in Combination with a Cooling Coil**

When this furnace is used with cooling coils (FIGURE 3), it shall be installed in parallel with, or on the upstream side of, cooling coils to avoid condensation in the heating compartment. With a parallel flow arrangement, a damper (or other means to control the flow of air) must adequately prevent chilled air from entering the furnace. If the damper is manually operated, it must be equipped to prevent operation of either the heating or the cooling unit, unless it is in the full **HEAT** or **COOL** setting.

When installed, this furnace must be electrically grounded according to local codes. In addition, in the United States, installation must conform with the current National Electric Code, ANSI/NFPA No. 70. The National Electric Code (ANSI/NFPA No. 70) is available from the following address:

National Fire Protection Association

1 Battery March Park

Quincy, MA 02269

In Canada, all electrical wiring and grounding for the unit must be installed according to the current regulations of the Canadian Electrical Code Part I (CSA Standard C22.1) and/or local codes

.

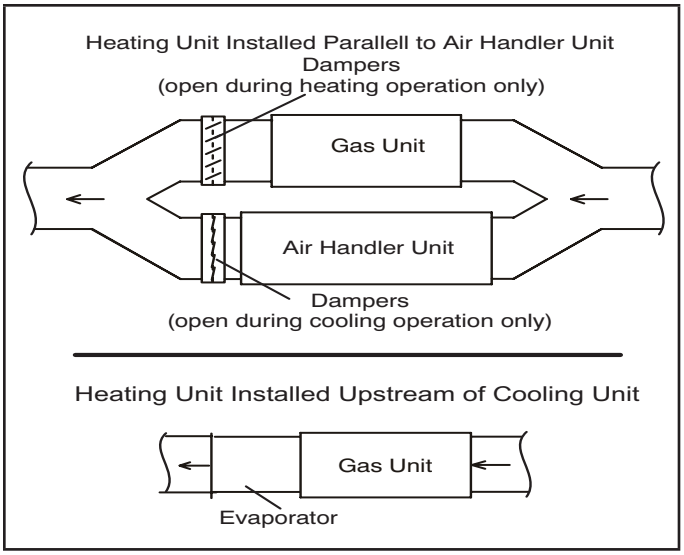


**FIGURE 3**

***NOTE -*** *This furnace is designed for a minimum continuous return air temperature of 60°F (16°C) or an intermittent operation down to 55°F (13°C) dry bulb for cases where a night setback thermostat is used. Return air temperature must not exceed 85°F (29°C) dry bulb.*

The ML296UHVK furnace may be installed in alcoves, closets, attics, basements, garages, crawl spaces and utility rooms in the upflow or horizontal position.

**This furnace design has not been CSA certified for installation in mobile homes, recreational vehicles, or outdoors**.

## Use of Furnace as Construction Heater

Units may be used for heating of buildings or structures under construction, if the following conditions are met to ensure proper operation:

**DO NOT USE THE UNIT FOR CONSTRUCTION HEAT UNLESS ALL OF THE FOLLOWING CRITERIA ARE MET**:

- Furnace must be in its final location. The vent system must be permanently installed per these installation instructions.
- Furnace must be installed as a two pipe system and one hundred percent (100%) outdoor air must be provided for combustion air requirements during construction.
- A room thermostat must control the furnace. The use of fixed jumpers that will provide continuous heating is prohibited.
- The input rate and temperature rise must be set per the furnace rating plate.
- Supply and Return air ducts must be provided and sealed to the furnace. Return air must be terminated outside of the space where furnace is installed.
- Return air temperature range between 60°F (16°C) and 80°F (27°C) must be maintained.
- MERV 11 or greater air filters must be installed in the system and must be regularly inspected and maintained (e.g., regular static checks and replaced at end of life) during construction.

- Blower and vestibule access panels must be in place on the furnace at all times.
- The furnace heat exchanger, components, duct system, and evaporator coils must be thoroughly cleaned following final construction clean−up.
- Air filters must be replaced upon construction completion.
- All furnace operating conditions (including ignition, input rate, temperature rise and venting) must be verified in accordance with these installation instructions.
- The refrigerant leak detection sensor must be inspected for dust/debris deposits. Please refer to the evaporator coil and/or refrigerant detection sensor kit instructions for additional information.

**EQUIPMENT MAY EXPERIENCE PREMATURE COMPONENT FAILURE AS A RESULT OF FAILURE TO FOLLOW THE ABOVE INSTALLATION INSTRUCTIONS. FAILURE TO FOLLOW THE ABOVE INSTALLATION INSTRUCTIONS VOIDS THE MANUFACTURER'S EQUIPMENT LIMITED WARRANTY. LENNOX DISCLAIMS ALL LIABILITY IN CONNECTION WITH INSTALLER'S FAILURE TO FOLLOW THE ABOVE INSTALLATION INSTRUCTIONS**.

**NOTWITHSTANDING THE FOREGOING, INSTALLER IS RESPONSIBLE FOR CONFIRMING THAT THE USE OF CONSTRUCTION HEAT IS CONSISTENT WITH THE POLICIES AND CODES OF ALL REGULATING ENTITIES. ALL SUCH POLICIES AND CODES MUST BE ADHERED TO.**

## General

These instructions are intended as a general guide and do not supersede local codes in any way. Consult authorities having jurisdiction before installation.

In addition to the requirements outlined previously, the following general recommendations must be considered when installing a ML296UHVK furnace:

- Place the furnace as close to the center of the air distribution system as possible. The furnace should also be located close to the vent termination point.
- When the furnace is installed in non-direct vent applications, do not install the furnace where drafts might blow directly into it. This could cause improper combustion and unsafe operation.
- When the furnace is installed in non-direct vent applications, do not block the furnace combustion air opening with clothing, boxes, doors, etc. Air is needed for proper combustion and safe unit operation.
- When the furnace is installed in an attic or other insulated space, keep insulation away from the furnace.
- When the furnace is installed in an unconditioned space, consider provisions required to prevent freezing of condensate drain system.
- Please consult the manufacturer of your evaporator coil for their recommendations on distance required between the heat exchanger and their drain pan. Adequate space must be provided between the drain pan and the furnace heat exchanger.

## ⚠ CAUTION

ML296UHVK unit should not be installed in areas normally subject to freezing temperatures.

## ⚠ WARNING

Insufficient combustion air can cause headaches, nausea, dizziness or asphyxiation. It will also cause excess water in the heat exchanger resulting in rusting and premature heat exchanger failure. Excessive exposure to contaminated combustion air will result in safety and performance related problems. Avoid exposure to the following substances in the combustion air supply:

Permanent wave solutions
Chlorinated waxes and cleaners
Chlorine base swimming pool chemicals
Water softening chemicals
De-icing salts or chemicals
Carbon tetrachloride
Halogen type refrigerants
Cleaning solvents (such as perchloroethylene)
Printing inks, paint removers, varnishes, etc.
Hydrochloric acid
Cements and glues
Antistatic fabric softeners for clothes dryers
Masonry acid washing materials

## Combustion, Dilution & Ventilation Air

If the ML296UHVK is installed as a Non-Direct Vent Furnace, follow the guidelines in this section.

***NOTE -*** *In Non-Direct Vent installations, combustion air is taken from indoors or ventilated attic or crawlspace and flue gases are discharged out-doors.*

In the past, there was no problem in bringing in sufficient outdoor air for combustion. Infiltration provided all the air that was needed. In today's homes, tight construction practices make it necessary to bring in air from outside for combustion. Take into account that exhaust fans, appliance vents, chimneys, and fireplaces force additional air that could be used for combustion out of the house. Unless outside air is brought into the house for combustion, negative pressure (outside pressure is greater than inside pressure) will build to the point that a downdraft can occur in the furnace vent pipe or chimney. As a result, combustion gases enter the living space creating a potentially dangerous situation.

In the absence of local codes concerning air for combustion and ventilation, use the guidelines and procedures in this section to install ML296UHVK furnaces to ensure efficient and safe operation. You must consider combustion air needs and requirements for exhaust vents and gas piping.

A portion of this information has been reprinted with permission from the National Fuel Gas Code (ANSI Z223.1/NFPA 54). This reprinted material is not the complete and official position of the ANSI on the referenced subject, which is represented only by the standard in its entirety.

In Canada, refer to the CSA B149 installation codes.

**⚠ CAUTION**

Do not install the furnace in a corrosive or contaminated atmosphere. Meet all combustion and ventilation air requirements, as well as all local codes.

All gas-fired appliances require air for the combustion process. If sufficient combustion air is not available, the furnace or other appliance will operate inefficiently and unsafely. Enough air must be provided to meet the needs of all fuel-burning appliances and appliances such as exhaust fans which force air out of the house. When fireplaces, exhaust fans, or clothes dryers are used at the same time as the furnace, much more air is required to ensure proper combustion and to prevent a downdraft. Insufficient air causes incomplete combustion which can result in carbon monoxide.

In addition to providing combustion air, fresh outdoor air dilutes contaminants in the indoor air. These contaminants may include bleaches, adhesives, detergents, solvents and other contaminants which can corrode furnace components.

The requirements for providing air for combustion and ventilation depend largely on whether the furnace is installed in an unconfined or a confined space.

Unconfined Space

An unconfined space is an area such as a basement or large equipment room with a volume greater than 50 cubic feet (1.42 m3) per 1,000 Btu (.29 kW) per hour of the combined input rating of all appliances installed in that space. This space also includes adjacent rooms which are not separated by a door. Though an area may appear to be unconfined, it might be necessary to bring in outdoor air for combustion if the structure does not provide enough air by infiltration. If the furnace is located in a building of tight construction with weather stripping and caulking around the windows and doors, follow the procedures in the Air from Outside section.

**Confined Space**

A confined space is an area with a volume less than 50 cubic feet (1.42 m3) per 1,000 Btu (.29 kW) per hour of the combined input rating of all appliances installed in that space. This definition includes furnace closets or small equipment rooms.

When the furnace is installed so that supply ducts carry air circulated by the furnace to areas outside the space containing the furnace, the return air must be handled by ducts which are sealed to the furnace casing and which terminate outside the space containing the furnace. This is especially important when the furnace is mounted on a platform in a confined space such as a closet or small equipment room.

Even a small leak around the base of the unit at the platform or at the return air duct connection can cause a potentially dangerous negative pressure condition. Air for combustion and ventilation can be brought into the confined space either from inside the building or from outside.

**Air from Inside**

If the confined space that houses the furnace adjoins a space categorized as unconfined, air can be brought in by providing two permanent openings between the two spaces. Each opening must have a minimum free area of 1 square inch (645 mm2) per 1,000 Btu (.29 kW) per hour of total input rating of all gas-fired equipment in the confined space. Each opening must be at least 100 square inches (64516 mm2). One opening shall be within 12 inches (305 mm) of the top of the enclosure and one opening within 12 inches (305 mm) of the bottom. See FIGURE 4.

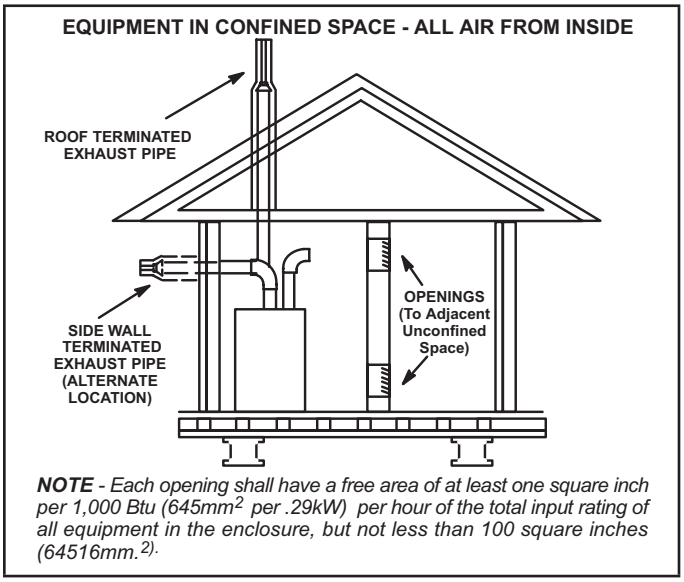


**FIGURE 4**

## Air from Outside

If air from outside is brought in for combustion and ventilation, the confined space shall be provided with two permanent openings. One opening shall be within 12” (305mm) of the top of the enclosure and one within 12” (305mm) of the bottom. These openings must communicate directly or by ducts with the outdoors or spaces (crawl or attic) that freely communicate with the outdoors or indirectly through vertical ducts. Each opening shall have a minimum free area of 1 square inch per 4,000 Btu (645mm2 per 1.17kW) per hour of total input rating of all equipment in the enclosure. When communicating with the outdoors through horizontal ducts, each opening shall have a minimum free area of 1 square inch per 2,000 Btu (645mm2 per .59kW) per total input rating of all equipment in the enclosure (FIGURE 5). It is also permissible to bring in air for combustion from a ventilated attic (FIGURE 6) or ventilated crawl space (FIGURE 7).

**EQUIPMENT IN CONFINED SPACE - ALL AIR FROM OUTSIDE**
**(Inlet Air from Crawl Space and Outlet Air to Outside)**

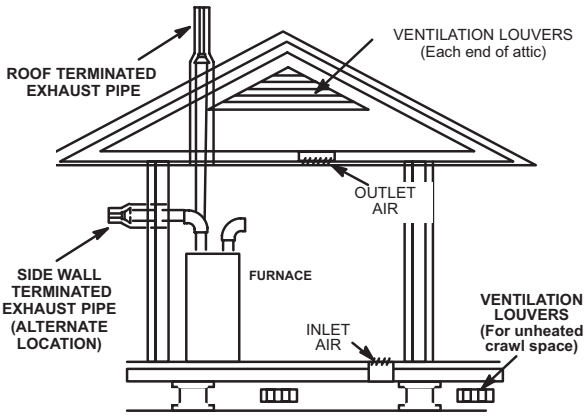


***NOTE**-The inlet and outlet air openings shall each have a free area of at least one square inch per 4,000 Btu (645mm$^2$ per 1.17kW) per hour of the total input rating of all equipment in the enclosure.*

**FIGURE 5**

**EQUIPMENT IN CONFINED SPACE**
**(Inlet Air from Ventilated Attic and Outlet Air to Outside)**

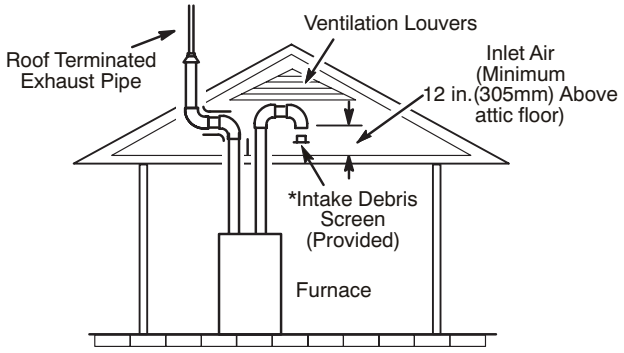


***NOTE**-The inlet and outlet air openings shall each have a free area of at least one square inch per 4,000 Btu (645mm$^2$ per 1.17kW) per hour of the total input rating of all equipment in the enclosure.*

**FIGURE 6**

**EQUIPMENT IN CONFINED SPACE**
**(Inlet Air from Ventilated Crawlspace and Outlet Air to Outside)**

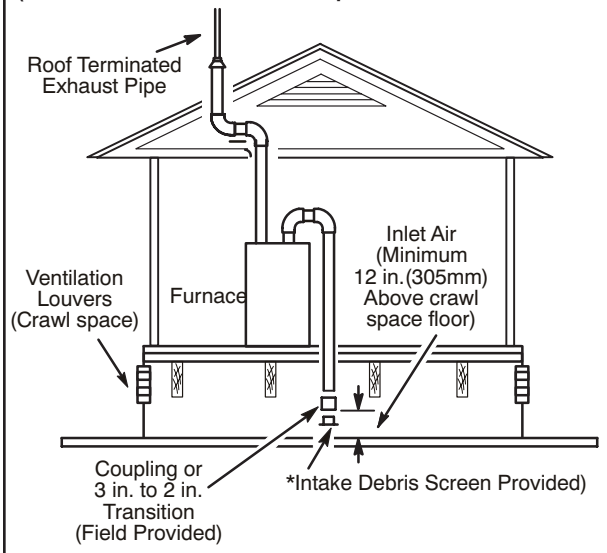


***NOTE**-The inlet and outlet air openings shall each have a free area of at least one square inch per 4,000 Btu (645mm$^2$ per 1.17kW) per hour of the total input rating of all equipment in the enclosure.*

**FIGURE 7**

If air from outside is brought in for combustion and ventilation, the confined space must have two permanent openings. One opening shall be within 12 inches (305 mm) of the top of the enclosure and one opening within 12 inches (305 mm) of the bottom. These openings must communicate directly or by ducts with the outdoors or spaces (crawl or attic) that freely communicate with the outdoors or indirectly through vertical ducts. Each opening shall have a minimum free area of 1 square inch (645 mm2) per 4,000 Btu (1.17 kW) per hour of total input rating of all equipment in the enclosure. See FIGURE 5 and FIGURE 8. When communicating with the outdoors through horizontal ducts, each opening shall have a minimum free area of 1 square inch (645 mm2) per 2,000 Btu (.56 kW) per total input rating of all equipment in the enclosure. See figure 9.

When ducts are used, they shall be of the same cross-sectional area as the free area of the openings to which they connect. The minimum dimension of rectangular air ducts shall be no less than 3 inches (75 mm). In calculating free area, the blocking effect of louvers, grilles, or screens must be considered. If the design and free area of protective covering is not known for calculating the size opening required, it may be assumed that wood louvers will have 20 to 25 percent free area and metal louvers and grilles will have 60 to 75 percent free area. Louvers and grilles must be fixed in the open position or interlocked with the equipment so that they are opened automatically during equipment operation.

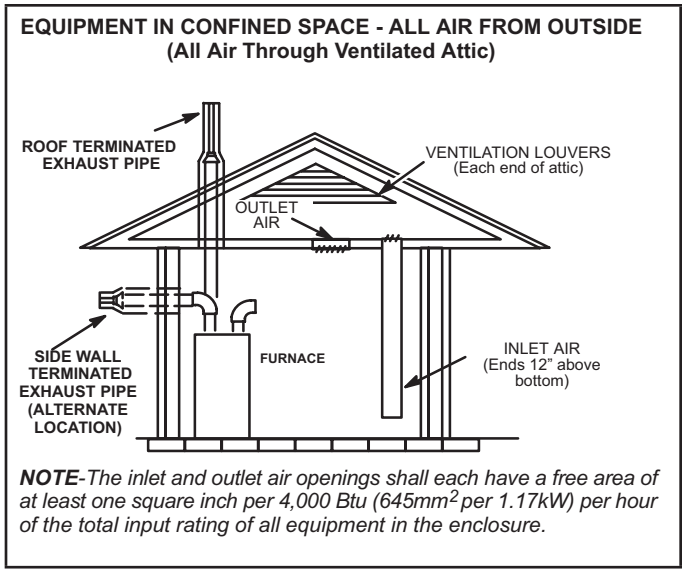


**FIGURE 8**

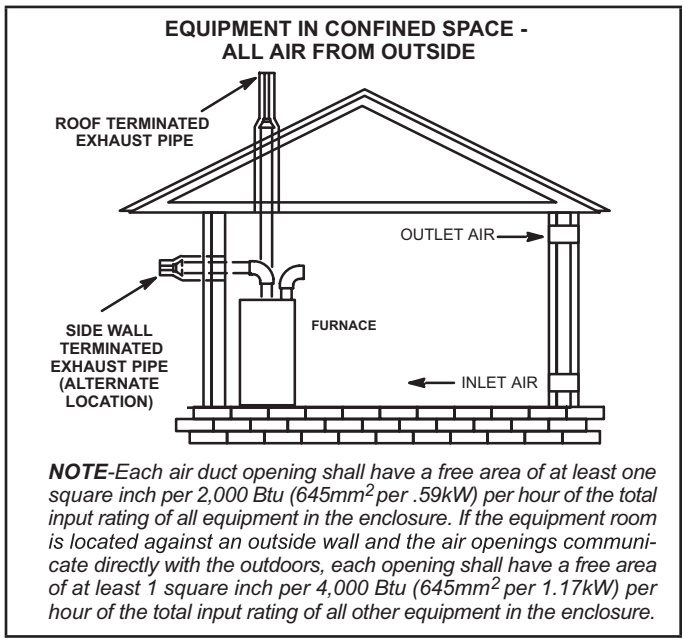


**FIGURE 9**

## Shipping Bolt Removal

Units with 1/2 hp blower motor are equipped with three flexible legs and one rigid leg. The rigid leg is equipped with a shipping bolt and a flat white plastic washer (rather than the rubber mounting grommet used with a flexible mounting-leg).See FIGURE 10.

The bolt and washer must be removed before the furnace is placed into operation. After the bolt and washer have been removed, the rigid leg will not touch the blower housing.

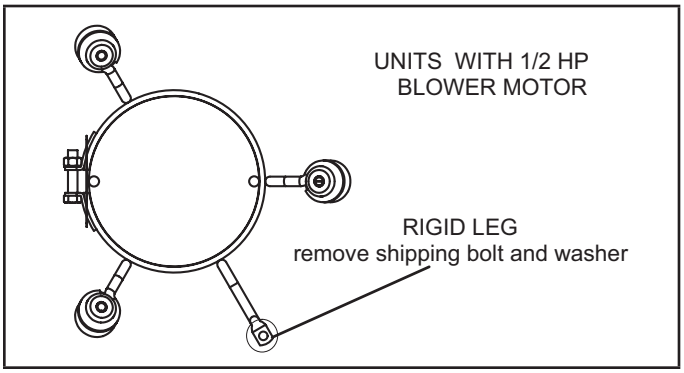


**FIGURE 10**

## Installation - Setting Equipment

**⚠ WARNING**

Do not connect the return air duct to the back of the furnace. Doing so will adversely affect the operation of the safety control devices, which could result in personal injury or death.

**⚠ WARNING**

Blower access panel must be securely in place when blower and burners are operating. Gas fumes, which could contain carbon monoxide, can be drawn into living space resulting in personal injury or death.

### Upflow Applications

The ML296UHVK gas furnace can be installed as shipped in the upflow position. Refer to FIGURE 12 for clearances. Select a location that allows for the required clearances that are listed on the unit nameplate. Also consider gas supply connections, electrical supply, vent connection, condensate trap and drain connections, and installation and service clearances [24 inches (610 mm) at unit front]. ***The unit must be level from side to side. The unit may be positioned from level to ½" toward the front. See FIGURE 11***.

Allow for clearances to combustible materials as indicated on the unit nameplate.

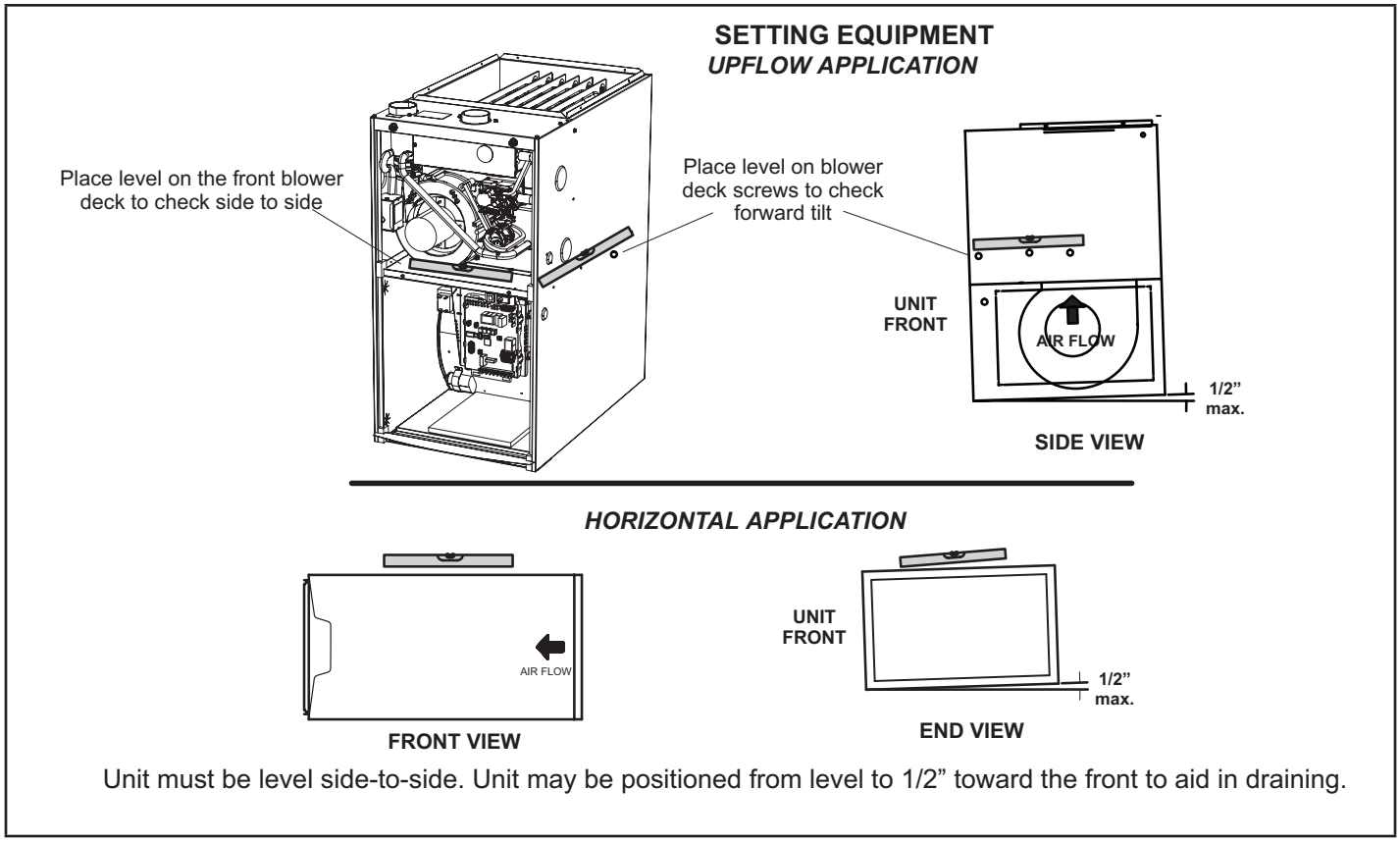
SETTING EQUIPMENT
UPFLOW APPLICATION
Place level on the front blower deck to check side to side
Place level on blower deck screws to check forward tilt
UNIT FRONT
AIR FLOW
1/2" max.
SIDE VIEW
HORIZONTAL APPLICATION
AIR FLOW
FRONT VIEW
UNIT FRONT
1/2" max.
END VIEW
Unit must be level side-to-side. Unit may be positioned from level to 1/2" toward the front to aid in draining.

**FIGURE 11**

## ⚠ WARNING

Improper installation of the furnace can result in personal injury or death. Combustion and flue products must never be allowed to enter the return air system or air in the living space. Use sheet metal screws and joint tape to seal return air system to furnace. In platform installations with furnace return, the furnace should be sealed airtight to the return air plenum. A door must never be used as a portion of the return air duct system. The base must provide a stable support and an airtight seal to the furnace. Allow absolutely no sagging, cracks, gaps, etc.

For no reason should return and supply air duct systems ever be connected to or from other heating devices such as a fireplace or stove, etc. Fire, explosion, carbon monoxide poisoning, personal injury and/or property damage could result.

**Installation Clearances**

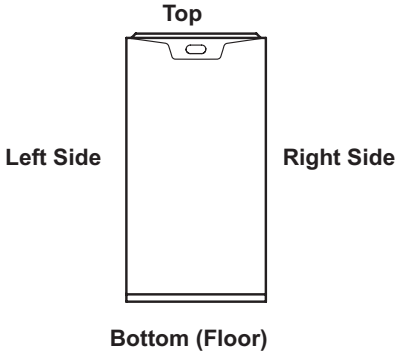


| Top/Plenum | 1 in. (25 mm) |
|---|---|
| *Front | 0 |
| Back | 0 |
| Sides | 0† |
| Vent | 0 |
| Floor | 0‡ |

*Front clearance in alcove installation must be 24 in. (610 mm). Maintain a minimum of 24 in. (610 mm) for front service access.
†Allow proper clearances to accommodate condensate trap.
‡For installations on a combustible floor, do not install the furnace directly on carpeting, tile or other combustible materials other than wood flooring.

**FIGURE 12**

### Return Air Guidelines

Return air can be brought in through the bottom or either side of the furnace installed in an upflow application. If the furnace is installed on a platform with bottom return, make an airtight seal between the bottom of the furnace and the platform to ensure that the furnace operates properly and safely. The furnace is equipped with a removable bottom panel to facilitate installation.

Markings are provided on both sides of the furnace cabinet for installations that require side return air. Cut the furnace cabinet at the maximum dimensions shown on page 2.

Refer to Engineering Handbook for additional information.

ML296UHVK applications which include side return air and a condensate trap installed on the same side of the cabinet (trap can be installed remotely within 5 ft.) require either a return air base or field-fabricated transition to accommodate an optional IAQ accessory taller than 14.5”. See FIGURE 13.

**Side Return Air (with transition and filter)**

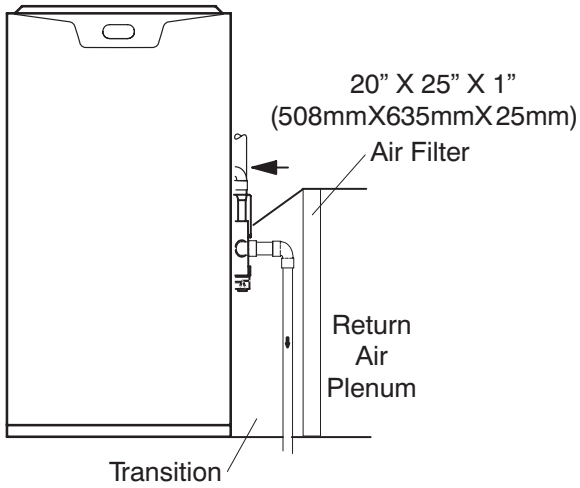


**FIGURE 13**

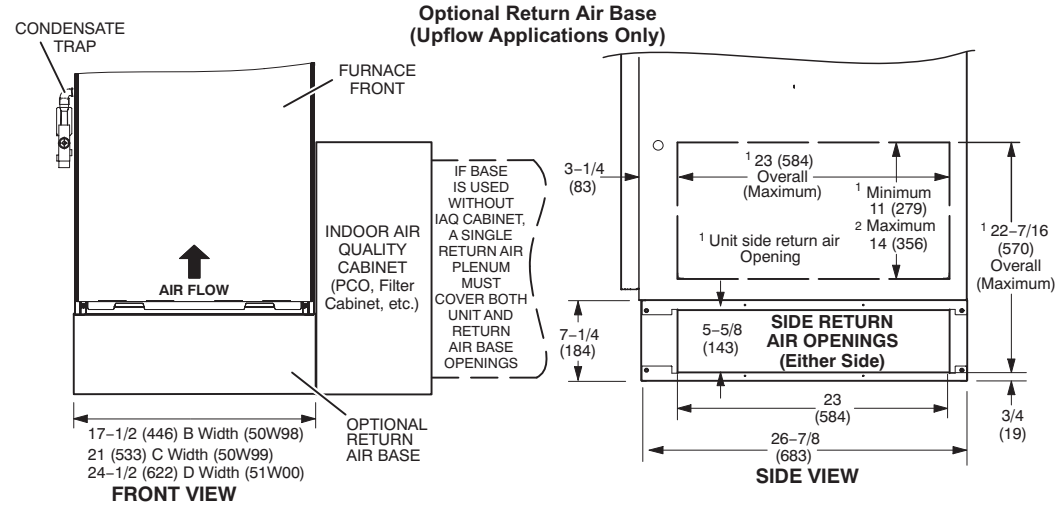


**NOTE- Optional side return air filter kits are not for use with return air base.**
**[1] Both the unit return air opening and the base return air opening must be covered by a single plenum or IAQ cabinet. Minimum unit side return air opening dimensions for units requiring 1800 cfm or more of air (W x H): 23 x 11 in. (584 x 279 mm). The opening can be cut as needed to accommodate plenum or IAQ cabinet while maintaining dimensions shown. Side return air openings must be cut in the field. There are cutting guides stenciled on the cabinet for the side return air opening. The size of the opening must not extend beyond the markings on the furnace cabinet.**
**[2] To minimize pressure drop, the largest opening height possible (up to 14 inches) is preferred.**

**FIGURE 14**

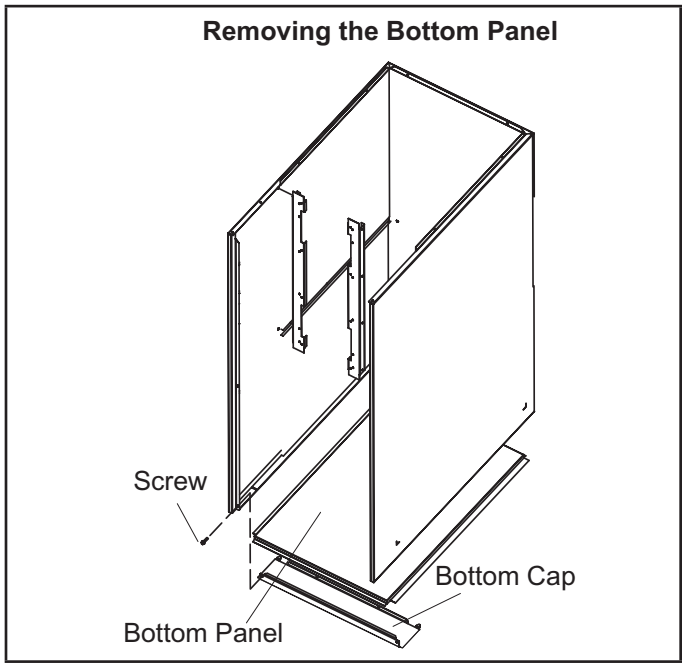


**FIGURE 15**

### Removing the Bottom Panel

Remove the two screws that secure the bottom cap to the furnace. Pivot the bottom cap down to release the bottom panel. Once the bottom panel has been removed, reinstall the bottom cap. See FIGURE 15.

**⚠ WARNING**

Do not install the furnace on its front or back. See FIGURE 16.

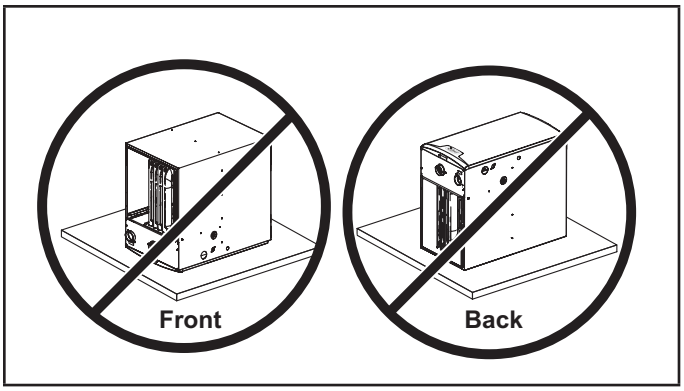


**FIGURE 16**

The ML296UHVK furnace can be installed in horizontal applications with either right- or left-hand air discharge.

Refer to FIGURE 17 for clearances in horizontal applications.

**Horizontal Application Installation Clearances**

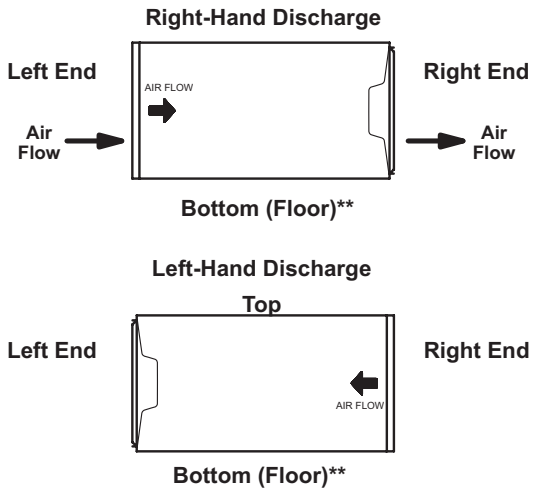


| | |
|---|---|
| Top | 0 |
| Front* | 0 |
| Back | 0 |
| Ends | 0 |
| Vent | 0 |
| Floor | 0‡ |

***Front clearance in alcove installation must be 24 in. (610 mm). Maintain a minimum of 24 in. (610 mm) for front service access.**
****An 8" service clearance must be maintained below the unit to provide for servicing of the condensate trap.**
**‡For installations on a combustible floor, do not install the furnace directly on carpeting, tile or other combustible materials other than wood flooring.**

**FIGURE 17**

**Suspended Installation of Horizontal Unit**

This furnace may be installed in either an attic or a crawlspace. Either suspend the furnace from roof rafters or floor joists, as shown in FIGURE 18, or install the furnace on a platform, as shown in FIGURE 19. A horizontal suspension kit (51W10) may be ordered from Lennox or use equivalent.

***NOTE -*** *Heavy-gauge sheet metal straps may be used to suspend the unit from roof rafters or ceiling joists. When straps are used to suspend the unit in this way, support must be provided for both the ends. The straps must not interfere with the plenum or exhaust piping installation. Cooling coils and supply and return air plenums must be supported separately.*

**HORIZONTAL SUSPENSION KIT**

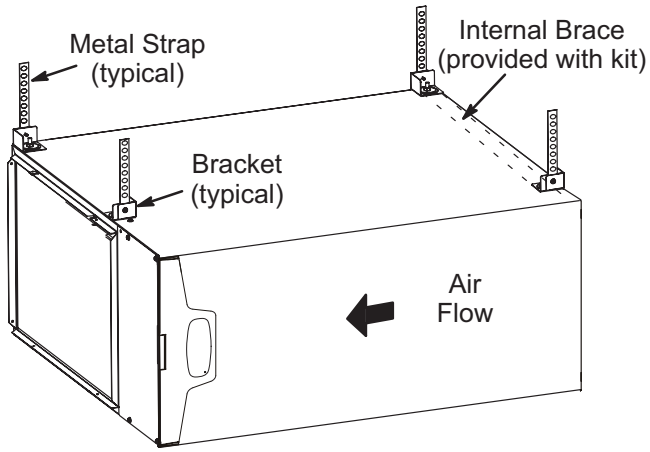


**FIGURE 18**

***NOTE -*** *When the furnace is installed on a platform or with the horizontal suspension kit in a crawlspace, it must be elevated enough to avoid water damage, accommodate drain trap and to allow the evaporator coil to drain.*

**Platform Installation of Horizontal Unit**

1 - Select location for unit keeping in mind service and other necessary clearances. See FIGURE 17.

2 - Construct a raised wooden frame and cover frame with a plywood sheet. If unit is installed above finished space, install an auxiliary drain pan under unit. Set unit in drain pan as shown in FIGURE 19. Leave 8 inches for service clearance below unit for condensate trap.

3 - Provide a service platform in front of unit. When installing the unit in a crawl space, a proper support platform may be created using cement blocks.

4 - Route auxiliary drain line so that water draining from this outlet will be easily noticed by the homeowner.

5 - If necessary, run the condensate line into a condensate pump to meet drain line slope requirements. The pump must be rated for use with condensing furnaces. Protect the condensate discharge line from the pump to the outside to avoid freezing.

6 - Continue with exhaust, condensate and intake piping installation according to instructions.

**Return Air -- Horizontal Applications**

Return air may be brought in only through the end of a furnace installed in the horizontal position. The furnace is equipped with a removable bottom panel to facilitate installation. See FIGURE 15.

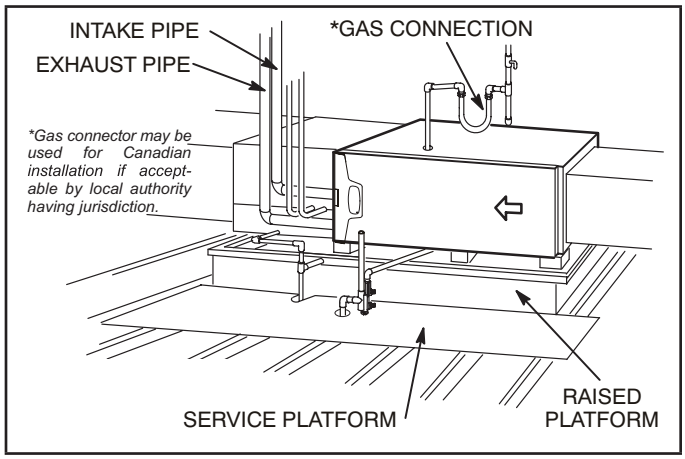


**FIGURE 19**

## Filters

This unit is not equipped with a filter or rack. A field-provided high velocity rated filter is required for the unit to operate properly. TABLE 1 lists recommended filter sizes. A filter must be in place whenever the unit is operating.

**⚠ IMPORTANT**

If a high efficiency filter is being installed as part of this system to ensure better indoor air quality, the filter must be properly sized. High efficiency filters have a higher static pressure drop than standard efficiency glass/foam filters. If the pressure drop is too great, system capacity and performance may be reduced.

The pressure drop may also cause the limit to trip more frequently during the winter and the indoor coil to freeze in the summer, resulting in an increase in the number of service calls.

Before using any filter with this system, check the specifications provided by the filter manufacturer against the data given in the appropriate Lennox Product Specifications bulletin. Additional information is provided in Service and Application Note ACC002 (August 2000).

**TABLE 1**

| Furnace Cabinet Width | Filter Size | |
|---|---|---|
| | Side Return | Bottom Return |
| 17-1/2” | 16 X 25 X 1 (1) | 16 X 25 X 1 (1) |
| 21” | 16 X 25 X 1 (1) | 20 X 25 X 1 (1) |
| 24-1/2” | 16 X 25 X 1 (2) | 24 X 25 X 1 (1) |

## Duct System

Use industry-approved standards to size and install the supply and return air duct system. Refer to ACCA Manual D. This will result in a quiet and low-static system that has uniform air distribution. See below for proper duct installation.

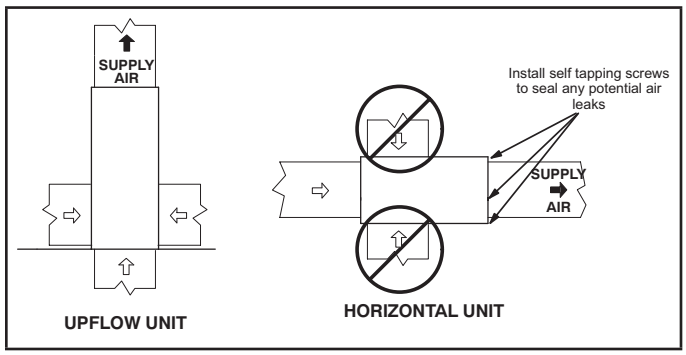


**FIGURE 20**

***NOTE -*** *This furnace is not certified for operation in heating mode (indoor blower operating at selected heating speed) with an external static pressure which exceeds 0.8 inches w.c. Operation at these conditions may result in improper limit operation.*

**Supply Air Plenum**

If the furnace is installed without a cooling coil, a removable access panel should be installed in the supply air duct. The access panel should be large enough to permit inspection of the heat exchanger. The furnace access panel must always be in place when the furnace is operating and it must not allow leaks. For horizontal only, install self tapping screws in the three evaporator coil screw holes made for horizontal applications to seal the top cap to the vestibule panel.

**Return Air Plenum**

***NOTE - Return air must not be drawn from a room where this furnace, or any other gas-fueled appliance (i.e., water heater), or carbon monoxide-producing device (i.e., wood fireplace) is installed.***

When return air is drawn from a room, a negative pressure is created in the room. If a gas appliance is operating in a room with negative pressure, the flue products can be pulled back down the vent pipe and into the room. This reverse flow of the flue gas may result in incomplete combustion and the formation of carbon monoxide gas. This raw gas or toxic fumes might then be distributed throughout the house by the furnace duct system.

Return air can be brought in through the bottom or either side of the furnace (return air brought into either side of furnace allowed only in upflow applications). If a furnace with bottom return air is installed on a platform, make an airtight seal between the bottom of the furnace and the platform to ensure that the unit operates properly and safely. Use fiberglass sealing strips, caulking, or equivalent sealing method between the plenum and the furnace cabinet to ensure a tight seal. If a filter is installed, size the return air duct to fit the filter frame

## Pipe & Fittings Specifications

All pipe, fittings, primer and solvent cement must conform with American National Standard Institute and the American Society for Testing and Materials (ANSI/ASTM) standards. The solvent shall be free flowing and contain no lumps, undissolved particles or any foreign matter that adversely affects the joint strength or chemical resistance of the cement. The cement shall show no gelation, stratification, or separation that cannot be removed by stirring. Refer to the TABLE 2 for approved piping and fitting materials.

**⚠ CAUTION**

Solvent cements for plastic pipe are flammable liquids and should be kept away from all sources of ignition. Do not use excessive amounts of solvent cement when making joints. Good ventilation should be maintained to reduce fire hazard and to minimize breathing of solvent vapors. Avoid contact of cement with skin and eyes.

Low temperature solvent cement is recommended during cooler weather. Metal or plastic strapping may be used for vent pipe hangers. Uniformly apply a liberal coat of PVC primer for PVC or use a clean dry cloth for ABS to clean inside socket surface of fitting and male end of pipe to depth of fitting socket.

***Canadian Applications Only -*** *Pipe, fittings, primer and solvent cement used to vent (exhaust) this appliance must be certified to ULC S636 and supplied by a single manufacturer as part of an approved vent (exhaust) system. In addition, the first three feet of vent pipe from the furnace flue collar must be accessible for inspection.*

**⚠ IMPORTANT**

ML296UHVK exhaust and intake connections are made of PVC. Use PVC primer and solvent cement when using PVC vent pipe. When using ABS vent pipe, use transitional solvent cement to make connections to the PVC fittings in the unit.

**TABLE 2**

| PIPING AND FITTINGS SPECIFICATIONS | |
|---|---|
| Schedule 40 PVC (Pipe) | D1785 |
| Schedule 40 PVC (Fittings) | D2466 |
| Schedule 40 CPVC (Pipe) | F441 |
| Schedule 40 CPVC (Fittings) | F438 |
| SDR-21 PVC or SDR-26 PVC (Pipe) | D2241 |
| SDR-21 CPVC or SDR-26 CPVC (Pipe) | F442 |
| Schedule 40 ABS (Pipe) | D1527 |
| Schedule 40 ABS (Fittings) | D2468 |
| ABS-DWV (Drain Waste & Vent) (Pipe & Fittings) | D2661 |
| PVC-DWV (Drain Waste & Vent) Pipe & Fittings) | D2665 |
| **PRIMER & SOLVENT CEMENT** | **ASTM SPECIFICATION** |
| PVC & CPVC Primer | F656 |
| PVC Solvent Cement | D2564 |
| CPVC Solvent Cement | F493 |
| ABS Solvent Cement | D2235 |
| PVC/CPVC/ABS All Purpose Cement For Fittings & Pipe of the same material | D2564, D2235, F493 |
| ABS to PVC or CPVC Transition Solvent Cement | D3138 |
| **CANADA PIPE & FITTING & SOLVENT CEMENT** | **MARKING** |
| PVC & CPVC Pipe and Fittings | ULC-S636 |
| PVC & CPVC Solvent Cement | |
| ABS to PVC or CPVC Transition Cement | |
| **POLYPROPYLENE VENTING SYSTEM** | |
| PolyPro® by Duravent | |
| InnoFlue® by Centrotherm | |
| ECCO Polypropylene Vent™ | |
| **UL 1738 CERTIFIED GAS VENTING SYSTEM** | |
| IPEX System1738 Schedule 40 PVC Pipes and Fittings | UL 1738 |
| IPEX System1738 PVC FGV Cement & Primer | |
| **POLYPROPYLENE VENTING SYSTEM** | |
| InnoFlue® by Centrotherm | |

Use PVC primer and solvent cement or ABS solvent cement meeting ASTM specifications, refer to TABLE 2. As an alternate, use all purpose cement, to bond ABS, PVC, or CPVC pipe when using fittings and pipe made of the same materials. Use transition solvent cement when bonding ABS to either PVC or CPVC.

**TABLE 3**

**OUTDOOR TERMINATION USAGE***

| Input Size | Vent Pipe Dia. in. | STANDARD | | | | CONCENTRIC | | |
|---|---|---|---|---|---|---|---|---|
| | | Flush Mount Kit | Wall Kit | | Field Fabricated | 1-1.2 inch | 2 inch | 3 inch |
| | | | 2 inch | 3 inch | | | | |
| | | 51W11 (US) 51W12 (CA) | 22G44 (US) 430G28 (CA) | 44J40 (US) 481J20 (CA) | | 71M80 (US) 444W92 (CA) | 69M29 (US) 444W92 (CA) | 60L46 (US) 444W93 (CA) |
| 045 | [6]1-1/2 | [3]YES | YES | [1]YES | [5]YES | [2]YES | | |
| | 2 | [3]YES | YES | [1]YES | [5]YES | [2]YES | | |
| | 2-1/2 | [3]YES | YES | [1]YES | [5]YES | [2]YES | | |
| | 3 | [3]YES | YES | [1]YES | [5]YES | [2]YES | | |
| 070 | [6]1-1/2 | [3]YES | YES | [1]YES | [5]YES | [2]YES | | |
| | 2 | [3]YES | YES | [1]YES | [5]YES | [2]YES | | |
| | 2-1/2 | [3]YES | YES | [1]YES | [5]YES | [2]YES | | |
| | 3 | [3]YES | YES | [1]YES | [5]YES | [2]YES | | |
| 090 | 2 | [3]YES | | YES | [5]YES | | YES | YES |
| | 2-1/2 | [3]YES | | YES | [5]YES | | YES | YES |
| | 3 | [3]YES | | YES | [5]YES | | YES | YES |
| 110 | 2 | YES | | YES | [5]YES | | YES | YES |
| | 2-1/2 | YES | | YES | [5]YES | | YES | YES |
| | 3 | YES | | YES | [5]YES | | YES | YES |

NOTE - Standard Terminations do not include any vent pipe or elbows external to the structure. Any vent pipe or elbows external to the structure must be included in total vent length calculations. See vent length tables.

* Kits must be properly installed according to kit instructions.

1 Requires field-provided outdoor 1-1/2" exhaust accelerator.

2 Concentric kits 71M80 and 44W92 include 1-1/2" outdoor accelerator, when used with 045 and 070 input models. 1-1/2 in. pipe must be transitioned to 2 in. when used with a concentric kit,

3 Flush mount kits 51W11 and 51W12 includes 1-1/2 in. outdoor exhaust accelerator, required when used with 045, 070 and 090 input models. 1-1/2 in. pipe must be transitioned to 2 in. pipe when used with the flushmount kit.

4 Termination kits 30G28, 44W92, 44W93 and 81J20 are certified to ULC S636 for use in Canada only.

5 See TABLE 8 for vent accelerator requirements.

6 2 in. pipe to 1-1/2 in. reducer required and must be field provided.

## Joint Cementing Procedure

All cementing of joints should be done according to the specifications outlined in ASTM D 2855.

**⚠ DANGER**

DANGER OF EXPLOSION!

Fumes from PVC glue may ignite during system check. Allow fumes to dissipate for at least 5 minutes before placing unit into operation..

1 - Measure and cut vent pipe to desired length.

2 - Debur and chamfer end of pipe, removing any ridges or rough edges. If end is not chamfered, edge of pipe may remove cement from fitting socket and result in a leaking joint.

***NOTE -*** *Check the inside of vent pipe thoroughly for any obstruction that may alter furnace operation.*

3 - Clean and dry surfaces to be joined.

4 - Test fit joint and mark depth of fitting on outside of pipe.

5 - Uniformly apply a liberal coat of PVC primer for PVC or use a clean dry cloth for ABS to clean inside socket surface of fitting and male end of pipe to depth of fitting socket.

***NOTE -*** *Time is critical at this stage. Do not allow primer to dry before applying cement.*

6 - Promptly apply solvent cement to end of pipe and inside socket surface of fitting. Cement should be applied lightly but uniformly to inside of socket. Take care to keep excess cement out of socket. Apply second coat to end of pipe.

7 - Immediately after applying last coat of cement to pipe, and while both inside socket surface and end of pipe are wet with cement, forcefully insert end of pipe into socket until it bottoms out. Turn PVC pipe 1/4 turn during assembly (but not after pipe is fully inserted) to distribute cement evenly. DO NOT turn ABS or cellular core pipe.

***NOTE -*** *Assembly should be completed within 20 seconds after last application of cement. Hammer blows should not be used when inserting pipe.*

8 - After assembly, wipe excess cement from pipe at end of fitting socket. A properly made joint will show a bead around its entire perimeter. Any gaps may indicate an improper assembly due to insufficient solvent.

9 - Handle joints carefully until completely set.

## Venting Practices

***NOTE -*** *For any Low GWP refrigerant systems with exposed line set joints installed in the same space, each non-direct vent furnace system must have a refrigerant detection sensor installed below the level of the burners ("SECONDARY SENSOR REQUIREMENTS" on page 53). Any direct vent furnace system is not subject to this requirement.*

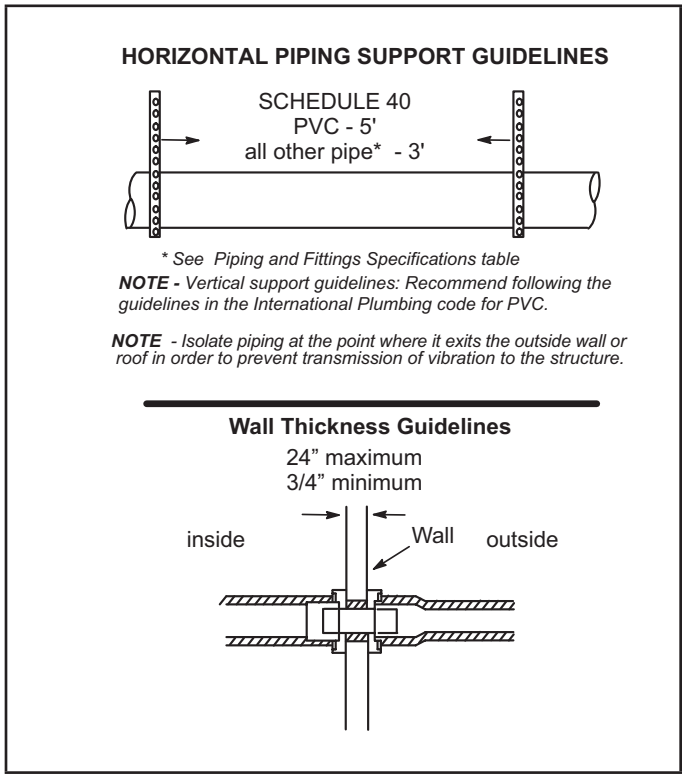


**FIGURE 21**

1 - In areas where piping penetrates joists or interior walls, hole must be large enough to allow clearance on all sides of pipe through center of hole using a hanger.

2 - When furnace is installed in a residence where unit is shut down for an extended period of time, such as a vacation home, make provisions for draining condensate collection trap and lines.

### Removal of the Furnace from Common Vent

In the event that an existing furnace is removed from a venting system commonly run with separate gas appliances, the venting system is likely to be too large to properly vent the remaining attached appliances.

Conduct the following test while each appliance is operating and the other appliances (which are not operating) remain connected to the common venting system. If the venting system has been installed improperly, you must correct the system as indicated in the general venting requirements section.

**⚠ WARNING**

CARBON MONOXIDE POISONING HAZARD

Failure to follow the steps outlined below for each appliance connected to the venting system being placed into operation could result in carbon monoxide poisoning or death.

The following steps shall be followed for each appliance connected to the venting system being placed into operation, while all other appliances connected to the venting system are not in operation:

1 - Seal any unused openings in the common venting system.

2 - Inspect the venting system for proper size and horizontal pitch. Determine that there is no blockage, restriction, leakage, corrosion, or other deficiencies which could cause an unsafe condition.

3 - Close all building doors and windows and all doors between the space in which the appliances remaining connected to the common venting system are located and other spaces of the building. Turn on clothes dryers and any appliances not connected to the common venting system. Turn on any exhaust fans, such as range hoods and bathroom exhausts, so they will operate at maximum speed. Do not operate a summer exhaust fan. Close fireplace dampers.

4 - Follow the lighting instructions. Turn on the appliance that is being inspected. Adjust the thermostat so that the appliance operates continuously.

5 - After the main burner has operated for 5 minutes, test for leaks of flue gases at the draft hood relief opening. Use the flame of a match or candle.

6 - After determining that each appliance connected to the common venting system is venting properly, (step 3) return all doors, widows, exhaust fans, fireplace dampers, and any other gas-burning appliances to their previous mode of operation.

7 - If a venting problem is found during any of the preceding tests, the common venting system must be modified to correct the problem.

Resize the common venting system to the minimum vent pipe size determined by using the appropriate tables in Appendix G. (These are in the current standards of the National Fuel Gas Code ANSI Z223.1.

**REPLACING FURNACE THAT WAS PART OF A COMMON VENT SYSTEM**

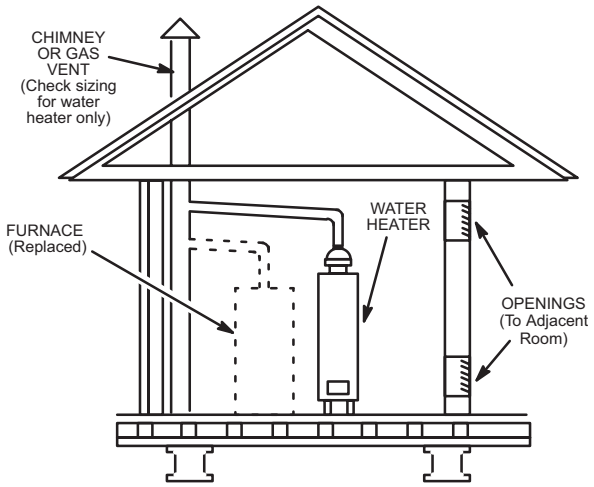


If replacing a furnace which was commonly vented with another gas appliance, the size of the existing vent pipe for that gas appliance must be checked. Without the heat of the original furnace flue products, the existing vent pipe is probably oversized for the single water heater or other appliance. The vent should be checked for proper draw with the remaining appliance.

**FIGURE 22**

**Exhaust Piping (FIGURE 25 and FIGURE 26)**

Route piping to outside of structure. Continue with installation following instructions given in piping termination section

.

**⚠ CAUTION**

Do not discharge exhaust into an existing stack or stack that also serves another gas appliance. If vertical discharge through an existing unused stack is required, insert PVC pipe inside the stack until the end is even with the top or outlet end of the metal stack.

**⚠ CAUTION**

The exhaust vent pipe operates under positive pressure and must be completely sealed to prevent leakage of combustion products into the living space.

## Vent Piping Guidelines

***NOTE -*** *Lennox has approved the use of DuraVent® and Centrotherm manufactured vent pipe and terminations as an option to PVC. When using the PolyPro® by DuraVent or InnoFlue® by Centrotherm venting system the vent pipe requirements stated in the unit installation instruction – minimum & maximum vent lengths, termination clearances, etc. – apply and must be followed. Follow the instructions provided with PoyPro by DuraVent and InnoFlue by Centrotherm venting system for assembly or if requirements are more restrictive. The PolyPro by Duravent and InnoFlue by Centrotherm venting system must also follow the uninsulated and unconditioned space criteria listed in TABLE 7.*

**The ML296UHVK can be installed as either a Non-Direct Vent or a Direct Vent gas central furnace.**

***NOTE -*** *In Non-Direct Vent installations, combustion air is taken from indoors or ventilated attic or crawlspace and flue gases are discharged outdoors. In Direct Vent installations, combustion air is taken from outdoors and flue gases are discharged outdoors.*

*Intake and exhaust pipe sizing* -- Size pipe according to TABLE 4 (minimum) and TABLE 5 (maximum). Count all elbows inside and outside the home. Regardless of the diameter of pipe used, the standard roof and wall terminations described in section *Exhaust Piping Terminations* should be used. Exhaust vent termination pipe is sized to optimize the velocity of the exhaust gas as it exits the termination. Refer to TABLE 8.

In some applications which permit the use of several different sizes of vent pipe, a combination vent pipe may be used. Contact Lennox' Application Department for assistance in sizing vent pipe in these applications.

NOTE - The exhaust collar on all models is sized to accommodate 2" Schedule 40 vent pipe. In horizontal applications, any transition to exhaust pipe larger than 2" must be made in vertical runs of the pipe. Therefore a 2" elbow must be added before the pipe is transitioned to any size larger than 2". This elbow must be added to the elbow count used to determine acceptable vent lengths. Contact the Application Department for more information concerning sizing of vent systems which include multiple pipe sizes.

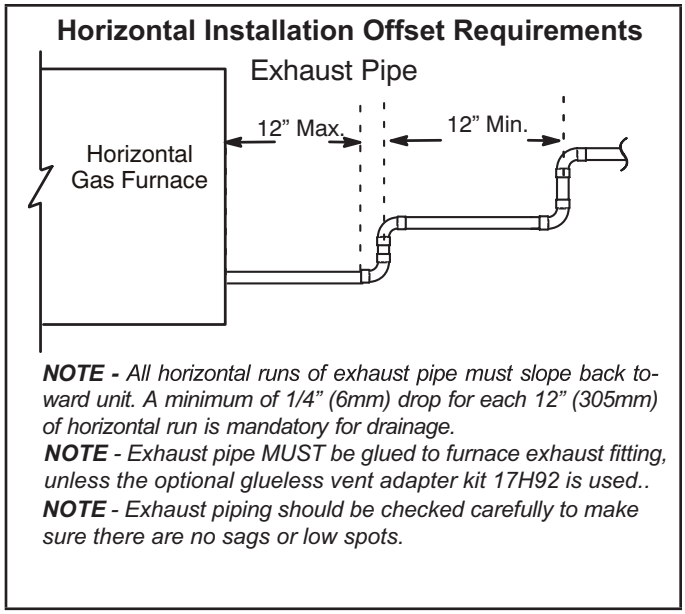


**FIGURE 23**

***NOTE -*** *Lennox offers a glueless vent adapter kit 17H92 as an option for exhaust exiting at the furnace top cap coupling. If the kit is not used the exhaust pipe MUST be glued to furnace exhaust fitting.*

**TABLE 4**

**MINIMUM VENT PIPE LENGTHS**

| ML296UHVK MODEL | MIN. VENT LENGTH* |
|---|---|
| 045, 070, 090, 110 | 15 ft. or 5 ft plus 2 elbows or 10 ft plus 1 elbow |

**Any approved termination may be added to the minimum length listed. Two 45 degree elbows are the equivalent to one 90 degree elbow.*

**⚠ IMPORTANT**

Do not use screens or perforated metal in exhaust or intake terminations. Doing so will cause freeze-ups and may block the terminations.

Use the following steps to correctly size vent pipe diameter.

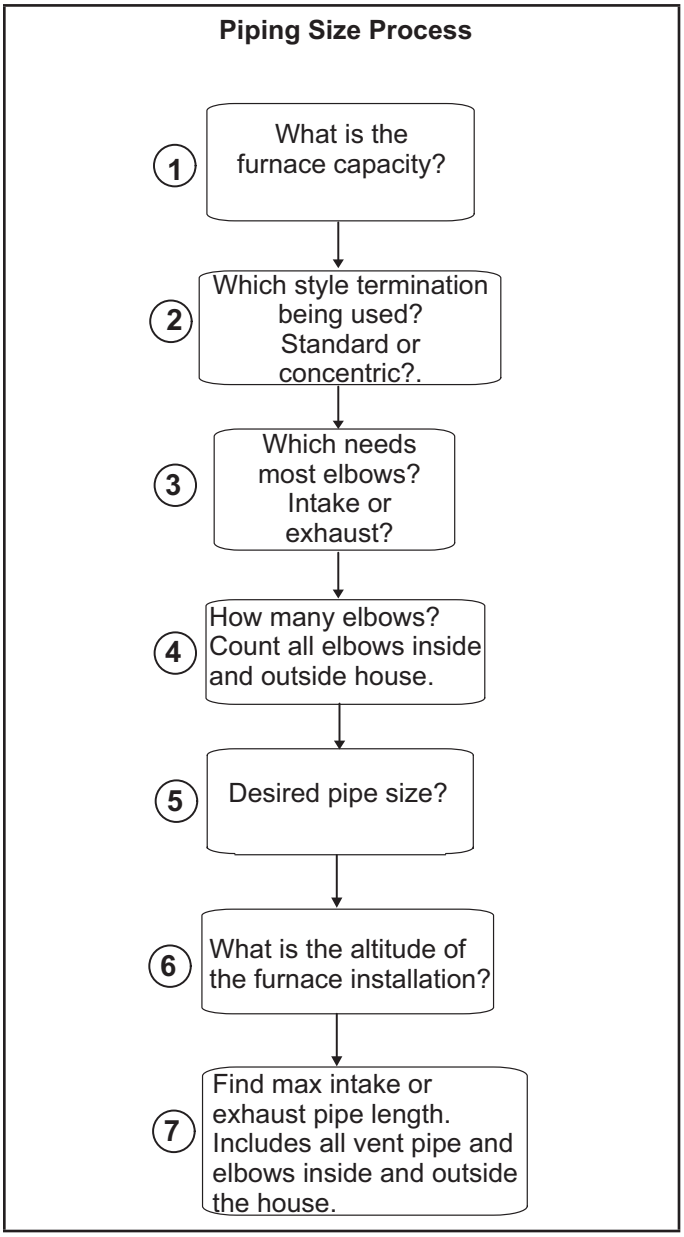


**FIGURE 24**

## TABLE 5

### Maximum Allowable Intake or Exhaust Vent Length in Feet

NOTE - Size intake and exhaust pipe length separately. Values in table are for Intake OR Exhaust, not combined total. Both Intake and Exhaust must be same pipe size.

| Standard Termination at Elevation 0 - 4500 ft | | | | | | | | | | | | | | | | |
|---|---|---|---|---|---|---|---|---|---|---|---|---|---|---|---|---|
| No Of 90° Elbows Used | 1-1/2” Pipe | | | | 2” Pipe | | | | 2-1/2” Pipe | | | | 3” Pipe | | | |
| | Model | | | | Model | | | | Model | | | | Model | | | |
| | 045 | 070 | 090 | 110 | 045 | 070 | 090 | 110 | 045 | 070 | 090 | 110 | 045 | 070 | 090 | 110 |
| 1 | 25 | 20 | n/a | n/a | 81 | 66 | 44 | 24 | 115 | 115 | 93 | 58 | 138 | 137 | 118 | 118 |
| 2 | 20 | 15 | | | 76 | 61 | 39 | 19 | 110 | 110 | 88 | 53 | 133 | 132 | 113 | 113 |
| 3 | 15 | 10 | | | 71 | 56 | 34 | 14 | 105 | 105 | 83 | 48 | 128 | 127 | 108 | 108 |
| 4 | 10 | n/a | | | 66 | 51 | 29 | n/a | 100 | 100 | 78 | 43 | 123 | 122 | 103 | 103 |
| 5 | n/a | | | | 61 | 46 | 24 | | 95 | 95 | 73 | 38 | 118 | 117 | 98 | 98 |
| 6 | | | | | 56 | 41 | 19 | | 90 | 90 | 68 | 33 | 113 | 112 | 93 | 93 |
| 7 | | | | | 51 | 36 | 14 | | 85 | 85 | 63 | 28 | 108 | 107 | 88 | 88 |
| 8 | | | | | 46 | 31 | n/a | | 80 | 80 | 58 | 23 | 103 | 102 | 83 | 83 |
| 9 | | | | | 41 | 26 | | | 75 | 75 | 53 | 18 | 98 | 97 | 78 | 78 |
| 10 | | | | | 36 | 21 | | | 70 | 70 | 48 | 13 | 93 | 92 | 73 | 73 |
| **Standard Termination Elevation 4500 - 10,000 ft** | | | | | | | | | | | | | | | | |
| No Of 90° Elbows Usedl | 1-1/2” Pipe | | | | 2” Pipe | | | | 2-1/2” Pipe | | | | 3” Pipe | | | |
| | Model | | | | Model | | | | Model | | | | Model | | | |
| | 045 | 070 | 090 | 110 | 045 | 070 | 090 | 110 | 045 | 070 | 090 | 110 | 045 | 070 | 090 | 110 |
| 1 | 25 | 20 | n/a | n/a | 81 | 66 | 44 | n/a | 115 | 115 | 93 | 58 | 138 | 137 | 118 | 118 |
| 2 | 20 | 15 | | | 76 | 61 | 39 | | 110 | 110 | 88 | 53 | 133 | 132 | 113 | 113 |
| 3 | 15 | 10 | | | 71 | 56 | 34 | | 105 | 105 | 83 | 48 | 128 | 127 | 108 | 108 |
| 4 | 10 | n/a | | | 66 | 51 | 29 | | 100 | 100 | 78 | 43 | 123 | 122 | 103 | 103 |
| 5 | n/a | | | | 61 | 46 | 24 | | 95 | 96 | 73 | 38 | 118 | 117 | 98 | 98 |
| 6 | | | | | 56 | 41 | 19 | | 90 | 90 | 68 | 33 | 113 | 112 | 93 | 93 |
| 7 | | | | | 51 | 36 | 14 | | 85 | 85 | 63 | 28 | 108 | 107 | 88 | 88 |
| 8 | | | | | 46 | 31 | n/a | | 80 | 80 | 58 | 23 | 103 | 102 | 83 | 83 |
| 9 | | | | | 41 | 26 | | | 75 | 75 | 53 | 18 | 98 | 97 | 78 | 78 |
| 10 | | | | | 36 | 21 | | | 70 | 70 | 48 | 13 | 93 | 92 | 73 | 73 |

*See concentric terminations next page.*

## TABLE 5 Continued

**Maximum Allowable Intake or Exhaust Vent Length in Feet**

*NOTE - Size intake and exhaust pipe length separately. Values in table are for Intake OR Exhaust, not combined total. Both Intake and Exhaust must be same pipe size.*

**Concentric Termination at Elevation 0 - 4500 ft**

| No Of 90° Elbows Used | 1-1/2" Pipe | | | | 2" Pipe | | | | 2-1/2" Pipe | | | | 3" Pipe | | | |
|---|---|---|---|---|---|---|---|---|---|---|---|---|---|---|---|---|
| | Model | | | | Model | | | | Model | | | | Model | | | |
| | 045 | 070 | 090 | 110 | 045 | 070 | 090 | 110 | 045 | 070 | 090 | 110 | 045 | 070 | 090 | 110 |
| 1 | 20 | 15 | n/a | n/a | 73 | 58 | 42 | 22 | 105 | 105 | 89 | 54 | 121 | 121 | 114 | 114 |
| 2 | 15 | 10 | | | 68 | 53 | 37 | 17 | 100 | 100 | 84 | 49 | 116 | 116 | 109 | 109 |
| 3 | 10 | n/a | | | 63 | 48 | 32 | 12 | 95 | 95 | 79 | 44 | 111 | 111 | 104 | 104 |
| 4 | n/a | | | | 58 | 43 | 27 | n/a | 90 | 90 | 74 | 39 | 106 | 106 | 99 | 99 |
| 5 | | | | | 53 | 38 | 22 | | 85 | 85 | 69 | 34 | 101 | 101 | 94 | 94 |
| 6 | | | | | 48 | 33 | 17 | | 80 | 80 | 64 | 29 | 96 | 96 | 89 | 89 |
| 7 | | | | | 43 | 28 | 12 | | 75 | 75 | 59 | 24 | 91 | 91 | 84 | 84 |
| 8 | | | | | 38 | 23 | n/a | | 70 | 70 | 54 | 19 | 86 | 86 | 79 | 79 |
| 9 | | | | | 33 | 18 | | | 65 | 65 | 49 | 14 | 81 | 81 | 74 | 74 |
| 10 | | | | | 28 | 13 | | | 60 | 60 | 44 | n/a | 76 | 76 | 69 | 69 |

**Concentric Termination Elevation 4500 - 10,000 ft**

| No Of 90° Elbows Used | 1-1/2" Pipe | | | | 2" Pipe | | | | 2-1/2" Pipe | | | | 3" Pipe | | | |
|---|---|---|---|---|---|---|---|---|---|---|---|---|---|---|---|---|
| | Model | | | | Model | | | | Model | | | | Model | | | |
| | 045 | 070 | 090 | 110 | 045 | 070 | 090 | 110 | 045 | 070 | 090 | 110 | 045 | 070 | 090 | 110 |
| 1 | 20 | 15 | n/a | n/a | 73 | 58 | 42 | n/a | 105 | 105 | 89 | 54 | 121 | 121 | 114 | 114 |
| 2 | 15 | 10 | | | 68 | 53 | 37 | | 100 | 100 | 84 | 49 | 116 | 116 | 109 | 109 |
| 3 | 10 | n/a | | | 63 | 48 | 32 | | 95 | 95 | 79 | 44 | 111 | 111 | 104 | 104 |
| 4 | n/a | | | | 58 | 43 | 27 | | 90 | 90 | 74 | 39 | 106 | 106 | 99 | 99 |
| 5 | | | | | 53 | 38 | 22 | | 85 | 85 | 69 | 34 | 101 | 101 | 94 | 94 |
| 6 | | | | | 48 | 33 | 17 | | 80 | 80 | 64 | 29 | 96 | 96 | 89 | 89 |
| 7 | | | | | 43 | 28 | 12 | | 75 | 75 | 59 | 24 | 91 | 91 | 84 | 84 |
| 8 | | | | | 38 | 23 | n/a | | 70 | 70 | 54 | 19 | 86 | 86 | 79 | 79 |
| 9 | | | | | 33 | 18 | | | 65 | 65 | 49 | 14 | 81 | 81 | 74 | 74 |
| 10 | | | | | 28 | 13 | | | 60 | 60 | 44 | n/a | 76 | 76 | 69 | 69 |

## TABLE 6

**Maximum Allowable Exhaust Vent Lengths With Furnace Installed in a Closet or Basement Using Ventilated Attic or Crawl Space For Intake Air in Feet**

***NOTE -*** *Size intake and exhaust pipe length separately. Values in table are for Intake OR Exhaust, not combined total. Both Intake and Exhaust must be same pipe size.*

***NOTE -*** *Additional vent pipe and elbows used to terminate the vent pipe outside the structure must be included in the total vent length calculation*

| Standard Termination at Elevation 0 - 4500 ft | | | | | | | | | | | | | | | | |
|---|---|---|---|---|---|---|---|---|---|---|---|---|---|---|---|---|
| No Of 90° Elbows Used | 1-1/2" Pipe | | | | 2" Pipe | | | | 2-1/2" Pipe | | | | 3" Pipe | | | |
| | Model | | | | Model | | | | Model | | | | Model | | | |
| | 045 | 070 | 090 | 110 | 045 | 070 | 090 | 110 | 045 | 070 | 090 | 110 | 045 | 070 | 090 | 110 |
| 1 | 20 | 15 | n/a | n/a | 71 | 56 | 34 | 14 | 100 | 100 | 78 | 43 | 118 | 117 | 98 | 98 |
| 2 | 15 | 10 | | | 66 | 51 | 29 | 9 | 95 | 95 | 73 | 38 | 113 | 112 | 93 | 93 |
| 3 | 10 | n/a | | | 61 | 46 | 24 | 4 | 90 | 90 | 68 | 33 | 108 | 107 | 88 | 88 |
| 4 | n/a | | | | 56 | 41 | 19 | n/a | 85 | 85 | 63 | 28 | 103 | 102 | 83 | 83 |
| 5 | | | | | 51 | 36 | 14 | | 80 | 80 | 58 | 23 | 98 | 97 | 78 | 78 |
| 6 | | | | | 46 | 31 | 9 | | 75 | 75 | 53 | 18 | 93 | 92 | 73 | 73 |
| 7 | | | | | 41 | 26 | 4 | | 70 | 70 | 48 | 13 | 88 | 87 | 68 | 68 |
| 8 | | | | | 36 | 21 | n/a | | 65 | 65 | 43 | 8 | 83 | 82 | 63 | 63 |
| 9 | | | | | 31 | 16 | | | 60 | 60 | 38 | 3 | 78 | 77 | 58 | 58 |
| 10 | | | | | 26 | 11 | | | 55 | 55 | 33 | n/a | 73 | 72 | 53 | 53 |

| Standard Termination Elevation 4500 - 10,000 ft | | | | | | | | | | | | | | | | |
|---|---|---|---|---|---|---|---|---|---|---|---|---|---|---|---|---|
| No Of 90° Elbows Usedl | 1-1/2" Pipe | | | | 2" Pipe | | | | 2-1/2" Pipe | | | | 3" Pipe | | | |
| | Model | | | | Model | | | | Model | | | | Model | | | |
| | 045 | 070 | 090 | 110 | 045 | 070 | 090 | 110 | 045 | 070 | 090 | 110 | 045 | 070 | 090 | 110 |
| 1 | 20 | 15 | n/a | n/a | 71 | 56 | 34 | n/a | 100 | 100 | 78 | 43 | 118 | 117 | 98 | 98 |
| 2 | 15 | 10 | | | 66 | 51 | 29 | | 95 | 95 | 73 | 38 | 113 | 112 | 93 | 93 |
| 3 | 10 | n/a | | | 61 | 46 | 24 | | 90 | 90 | 68 | 33 | 108 | 107 | 88 | 88 |
| 4 | n/a | | | | 56 | 41 | 19 | | 85 | 85 | 63 | 28 | 103 | 102 | 83 | 83 |
| 5 | | | | | 51 | 36 | 14 | | 80 | 80 | 58 | 23 | 98 | 97 | 78 | 78 |
| 6 | | | | | 46 | 31 | 9 | | 75 | 75 | 53 | 18 | 93 | 92 | 73 | 73 |
| 7 | | | | | 41 | 26 | 4 | | 70 | 70 | 48 | 13 | 88 | 87 | 68 | 68 |
| 8 | | | | | 36 | 21 | n/a | | 65 | 65 | 43 | 8 | 83 | 82 | 63 | 63 |
| 9 | | | | | 31 | 16 | | | 60 | 60 | 38 | 3 | 78 | 77 | 58 | 58 |
| 10 | | | | | 26 | 11 | | | 55 | 55 | 33 | n/a | 73 | 72 | 53 | 53 |

**TYPICAL *EXHAUST AND INTAKE* PIPE CONNECTIONS IN UPFLOW DIRECT OR NON-DIRECT VENT APPLICATIONS**

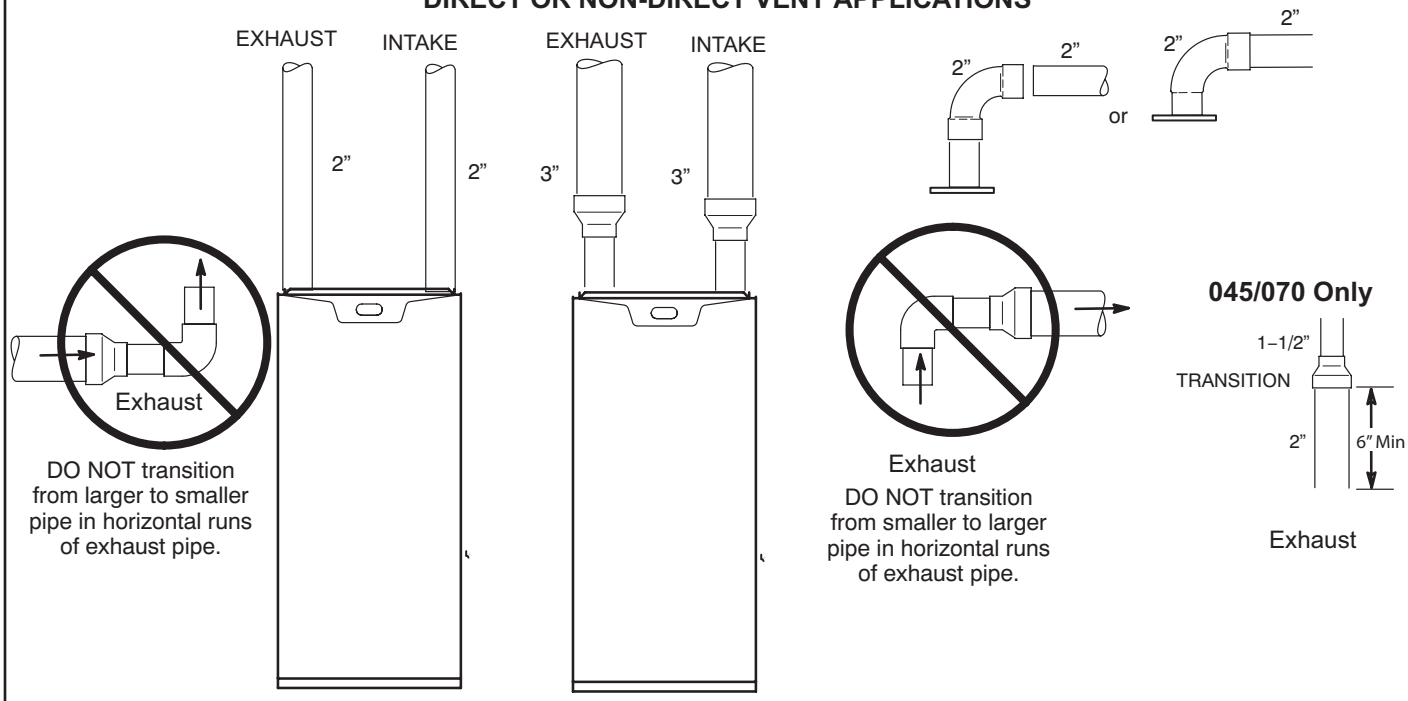


* When transitioning up in pipe size, use the shortest length of 2” PVC pipe possible.
NOTE – Exhaust pipe and intake pipe must be the same diameter.

**FIGURE 25**

**TYPICAL *EXHAUST AND INTAKE* PIPE CONNECTIONS IN HORIZONTAL DIRECT OR NON-DIRECT VENT APPLICATIONS (RIGHT HAND DISCHARGE SHOWN)**

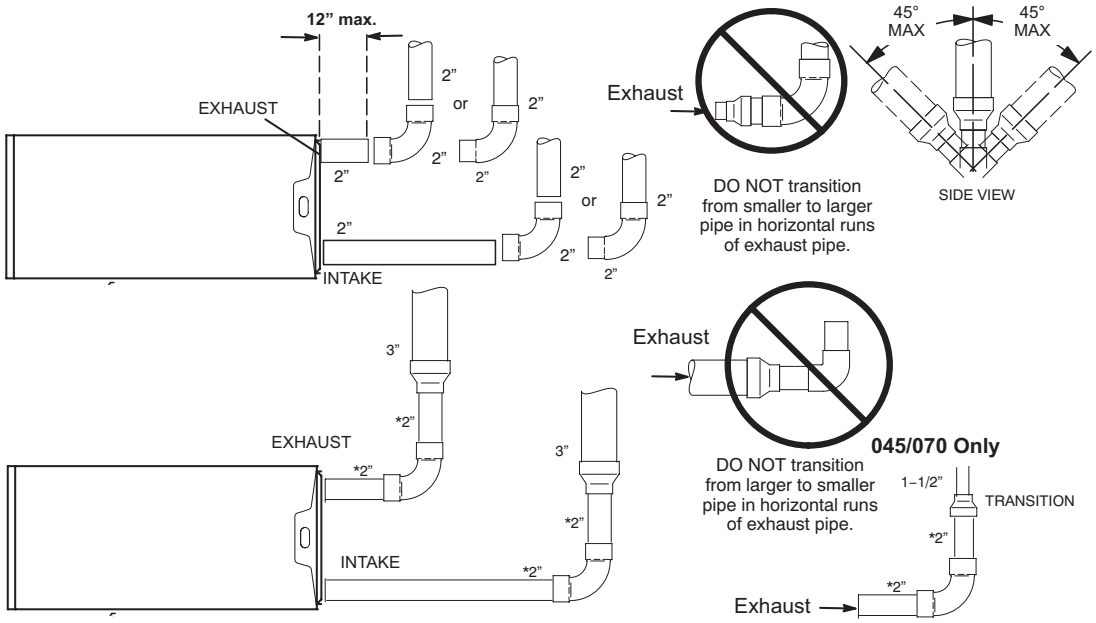


* When transitioning up in pipe size, use the shortest length of 2” PVC pipe possible.
NOTE – Exhaust pipe and intake pipe must be the same diameter.

**FIGURE 26**

### Intake Piping

The ML296UHVK furnace may be installed in either direct vent or non-direct vent applications. In non-direct vent applications, when intake air will be drawn into the furnace from the surrounding space, the indoor air quality must be considered and guidelines listed in Combustion, Dilution and Ventilation Air section must be followed.

Follow the next two steps when installing the unit in Direct Vent applications, where combustion air is taken from outdoors and flue gases are discharged outdoors. The provided air intake screen must not be used in direct vent applications (outdoors).

1 - Use transition solvent cement or a sheet metal screw to secure the intake pipe to the inlet air connector.

2 - Route piping to outside of structure. Continue with installation following instructions given in general guidelines for piping terminations and intake and exhaust piping terminations for direct vent sections. Refer to TABLE 5 for pipe sizes.

**TYPICAL AIR INTAKE PIPE CONNECTIONS**
UPFLOW NON–DIRECT
VENT APPLICATIONS

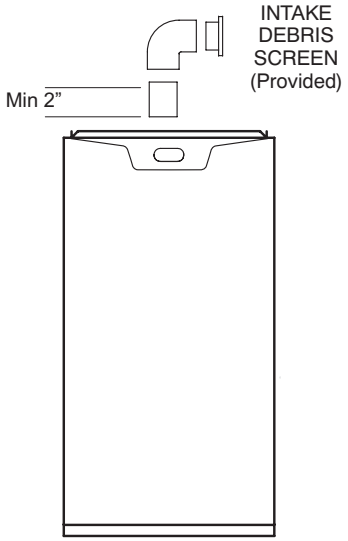


***NOTE*** *- Debris screen and elbow may be rotated, so that screen may be positioned to face forward or to either side.*

**FIGURE 27**

**TYPICAL AIR INTAKE PIPE CONNECTIONS**
HORIZONTAL NON–DIRECT VENT APPLICATIONS
(Horizontal Right–Hand Air Discharge Application Shown)

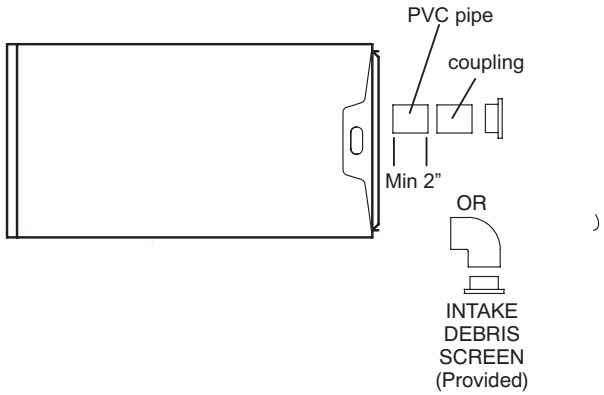


***NOTE*** *- Debris screen may be positioned straight out (preferred) or with an elbow rotated to face down.*

**FIGURE 28**

Follow the next two steps when installing the unit in **Non-Direct Vent applications** where combustion air is taken from indoors or ventilated attic or crawlspace and flue gases are discharged outdoors.

1 - Use field-provided materials and the factory-provided air intake screen to route the intake piping as shown in FIGURE 27 or FIGURE 28. Maintain a minimum clearance of 3” (76mm) around the air intake opening. The air intake opening (with the protective screen) should always be directed forward or to either side in the upflow position, and either straight out or downward in the horizontal position.

**The air intake piping must not terminate too close to the flooring or a platform. Ensure that the intake air inlet will not be obstructed by loose insulation or other items that may clog the debris screen.**

2 - If intake air is drawn from a ventilated attic (FIGURE 29) or ventilated crawlspace (FIGURE 30) the exhaust vent length must not exceed those listed in TABLE 6 If 3” diameter pipe is used, reduce to 2” diameter pipe at the termination point to accommodate the debris screen.

3 - Use a sheet metal screw to secure the intake pipe to the connector, if desired.

## ⚠ CAUTION

If this unit is being installed in an application with combustion air coming in from a space serviced by an exhaust fan, power exhaust fan, or other device which may create a negative pressure in the space, take care when sizing the inlet air opening. The inlet air opening must be sized to accommodate the maximum volume of exhausted air as well as the maximum volume of combustion air required for all gas appliances serviced by this space.

**EQUIPMENT IN CONFINED SPACE**
**(Inlet Air from Ventilated Attic and Outlet Air to Outside)**

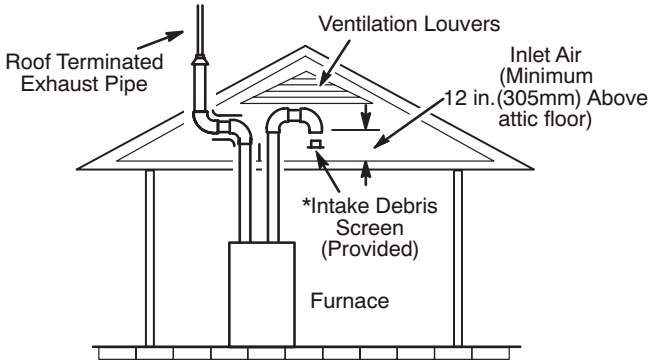


***NOTE**-The inlet and outlet air openings shall each have a free area of at least one square inch per 4,000 Btu (645mm$^2$ per 1.17kW) per hour of the total input rating of all equipment in the enclosure.*

**FIGURE 29**

**EQUIPMENT IN CONFINED SPACE**
**(Inlet Air from Ventilated Crawlspace and Outlet Air to Outside)**

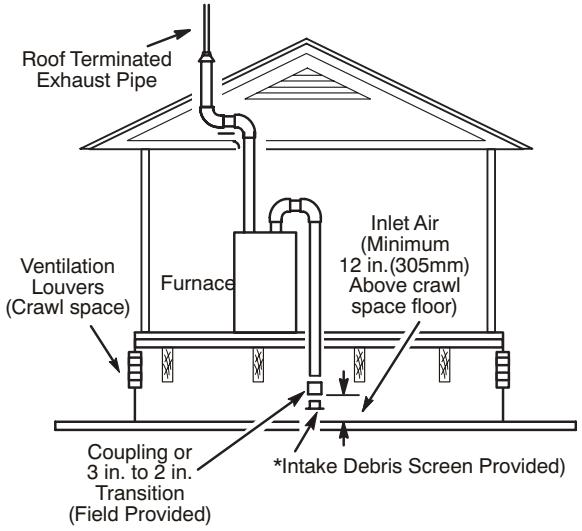


***NOTE**-The inlet and outlet air openings shall each have a free area of at least one square inch per 4,000 Btu (645mm$^2$ per 1.17kW) per hour of the total input rating of all equipment in the enclosure.*

**FIGURE 30**

### General Guidelines for Vent Terminations

In Non-Direct Vent applications, combustion air is taken from indoors or ventilated attic or crawlspace and the flue gases are discharged to the outdoors. The ML296UHVK is then classified as a non-direct vent, Category IV gas furnace.

In Direct Vent applications, combustion air is taken from outdoors and the flue gases are discharged to the outdoors.

The ML296UHVK is then classified as a direct vent, Category IV gas furnace. In both Non-Direct Vent and Direct Vent applications, the vent termination is limited by local building codes. In the absence of local codes, refer to the current National Fuel Gas Code ANSI Z223-1/NFPA 54 in U.S.A., and current CSA-B149 Natural Gas and Propane Installation Codes in Canada for details.

Position termination according to location given in FIGURE 32 or FIGURE 33. In addition, position termination so it is free from any obstructions and 12” above the average snow accumulation.

At vent termination, care must be taken to maintain protective coatings over building materials (prolonged exposure to exhaust condensate can destroy protective coatings). It is recommended that the exhaust outlet not be located within 6 feet (1.8m) of an outdoor AC unit because the condensate can damage the painted coating.

***NOTE -** See TABLE 7 for maximum allowed exhaust pipe length without insulation in unconditioned space during winter design temperatures below 32°F (0°C). If required exhaust pipe should be insulated with 1/2” (13mm) Armaflex or equivalent. In extreme cold climate areas, 3/4” (19mm) Armaflex or equivalent may be necessary. Insulation must be protected from deterioration. Armaflex with UV protection is permissible. Basements or other enclosed areas that are not exposed to the outdoor ambient temperature and are above 32 degrees F (0°C) are to be considered conditioned spaces.*

## ⚠ IMPORTANT

Do not use screens or perforated metal in exhaust or intake terminations. Doing so will cause freeze-ups and may block the terminations.

## ⚠ IMPORTANT

For Canadian Installations Only:

In accordance to CSA International B149 installation codes, the minimum allowed distance between the combustion air intake inlet and the exhaust outlet of other appliances shall not be less than 12 inches (305mm).

**TABLE 7**

**Maximum Allowable Exhaust Vent Pipe Length (in ft.[3]) Without Insulation In Unconditioned Space For Winter Design Temperatures Two - Stage High Efficiency Furnace**

| Winter Design Tempera-tures1 °F (°C) | Vent Pipe Diameter | Unit Input Size | | | | | | | |
|---|---|---|---|---|---|---|---|---|---|
| | | 045 | | 070 | | 090 | | 110 | |
| | | PVC | [2]PP | PVC | [2]PP | PVC | [2]PP | PVC | [2]PP |
| 32 to 21 (0 to -6) | 1-1/2 | 22 | n/a | 25 | n/a | n/a | n/a | n/a | n/a |
| | 2 in | 21 | 18 | 33 | 30 | 46 | 42 | 30 | 30 |
| | 2-1/2 in | 16 | n/a | 26 | n/a | 37 | n/a | 36 | n/a |
| | 3 in | 12 | 12 | 21 | 21 | 30 | 30 | 29 | 29 |
| 20 to 1 (-7 to -17) | 1-1/2 | 12 | n/a | 20 | n/a | n/a | n/a | n/a | n/a |
| | 2 in | 11 | 9 | 19 | 17 | 28 | 25 | 27 | 24 |
| | 2-1/2 in | 7 | n/a | 14 | n/a | 21 | n/a | 20 | n/a |
| | 3 in | 2 | 2 | 9 | 9 | 16 | 16 | 14 | 14 |
| 0 to -20 (-18 to -29) | 1-1/2 | 8 | n/a | 13 | n/a | n/a | n/a | n/a | n/a |
| | 2 in | 6 | 4 | 12 | 10 | 19 | 16 | 18 | 15 |
| | 2-1/2 in | 1 | n/a | 7 | n/a | 13 | n/a | 12 | n/a |
| | 3 in | 1 | 1 | 2 | 2 | 8 | 8 | 7 | 7 |

*1Refer to 99% Minimum Design Temperature table provided in the current edition of the ASHRAE Fundamentals Handbook.*

*2 . PolyPro® poly-propylene vent pipe is a registered trademark of DuraVent®. Innoflue® is a registered trademark of Centrotherm Eco Systems.ECCO Polypropylene Vent™is a registered trademark of ECCO Manufacturing™*

*3 Vent length in table is equivalent length. Consider each elbow as 5ft. of linear length.*

*NOTE - Concentric terminations are the equivalent of 5' and should be considered when measuring pipe length.*

*NOTE - Maximum unisulated vent lengths listed may include the termination(vent pipe exterior to the structure) and cannot exceed 5 linear feet or the maximum allowable intake or exhaust vent length listed in TABLE 5 or TABLE 6 which ever is less.*

*NOTE - If insulation is required in an unconditioned space, it must be located on the pipe closest to the furnace. See FIGURE 31.*

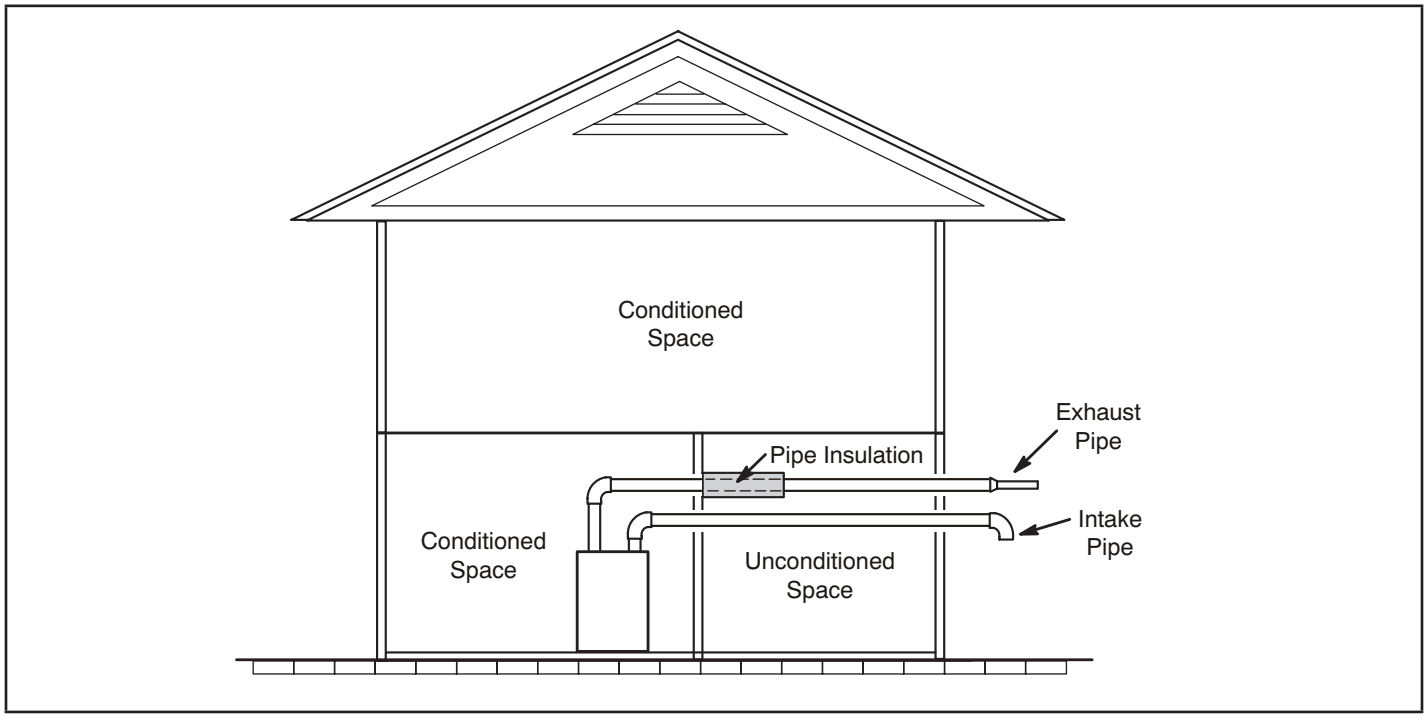


**FIGURE 31**

## VENT TERMINATION CLEARANCES
## FOR NON-DIRECT VENT INSTALLATIONS IN THE USA AND CANADA

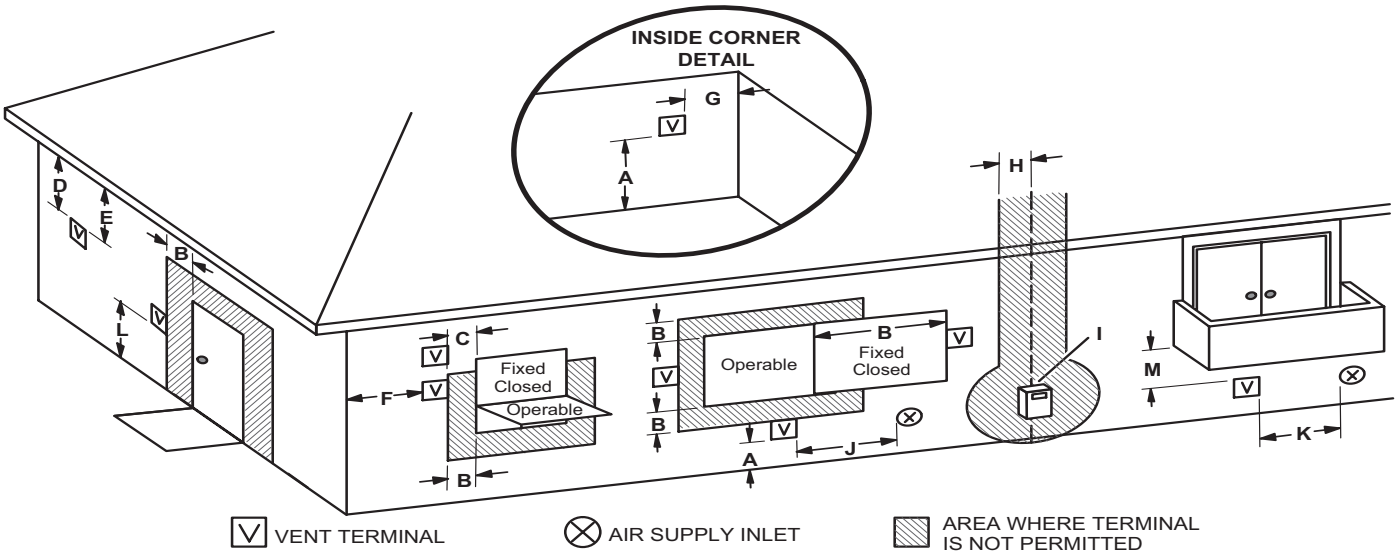


| | | US Installations[1] | Canadian Installations[2] |
|---|---|---|---|
| A = | Clearance above grade, veranda, porch, deck or balcony | 12 inches (305mm) or 12 in. (305mm) above average snow accumulation. | 12 inches (305mm) or 12 in. (305mm) above average snow accumulation. |
| B = | Clearance to window or door that may be opened | 4 feet (1.2 m) below or to side of opening; 1 foot (30cm) above opening | 6 inches (152mm) for appliances <10,000 Btuh (3kw), 12 inches (305mm) for appliances > 10,000 Btuh (3kw) and <100,000 Btuh (30kw), 36 inches (.9m) for appliances > 100,000 Btuh (30kw) |
| C = | Clearance to permanently closed window | * 12” | * 12” |
| D = | Vertical clearance to ventilated soffit located above the terminal within a horizontal distance of 2 feet (610 mm) from the center line of the terminal | * Equal to or greater than soffit depth. | * Equal to or greater than soffit depth. |
| E = | Clearance to unventilated soffit | * Equal to or greater than soffit depth. | * Equal to or greater than soffit depth. |
| F = | Clearance to outside corner | * No minimum to outside corner | * No minimum to outside corner |
| G = | Clearance to inside corner | * | * |
| H = | Clearance to each side of center line extended above meter / regulator assembly | * 3 feet (.9m) within a height 15 feet (4.5m) above the meter / regulator assembly | 3 feet (.9m) within a height 15 feet (4.5m) above the meter / regulator assembly |
| I = | Clearance to service regulator vent outlet | * 3 feet (.9m) | 3 feet (.9m) |
| J = | Clearance to non-mechanical air supply inlet to building or the combustion air inlet to any other appliance | 4 feet (1.2 m) below or to side of opening; 1 foot (30 cm) above opening | 6 inches (152mm) for appliances <10,000 Btuh (3kw), 12 inches (305mm) for appliances > 10,000 Btuh (3kw) and <100,000 Btuh (30kw), 36 inches (.9m) for appliances > 100,000 Btuh (30kw) |
| K = | Clearance to mechanical air supply inlet | 3 feet (.9m) above if within 10 feet (3m) horizontally | 6 feet (1.8m) |
| L = | Clearance above paved sidewalk or paved driveway located on public property | 7 feet (2.1m)† | 7 feet (2.1m)† |
| M = | Clearance under veranda, porch, deck or balcony | *12 inches (305mm)‡ | 12 inches (305mm)‡ |

[1] In accordance with the current ANSI Z223.1/NFPA 54 Natural Fuel Gas Code
[2] In accordance with the current CSA B149.1, Natural Gas and Propane Installation Code
† A vent shall not terminate directly above a sidewalk or paved driveway that is located between two single family dwellings and serves both dwellings.
‡ Permitted only if veranda, porch, deck or balcony is fully open on a minimum of two sides beneath the floor. Lennox recommends avoiding this location if possible.

*For clearances not specified in ANSI Z223.1/NFPA 54 or CSA B149.1, clearance will be in accordance with local installation codes and the requirements of the gas supplier and these installation instructions.”

***NOTE -*** *This figure is intended to illustrate clearance requirement and does not serve as a substitute for locally adopted installation codes.*

**FIGURE 32**

## VENT TERMINATION CLEARANCES
## FOR DIRECT VENT INSTALLATIONS IN THE US AND CANADA

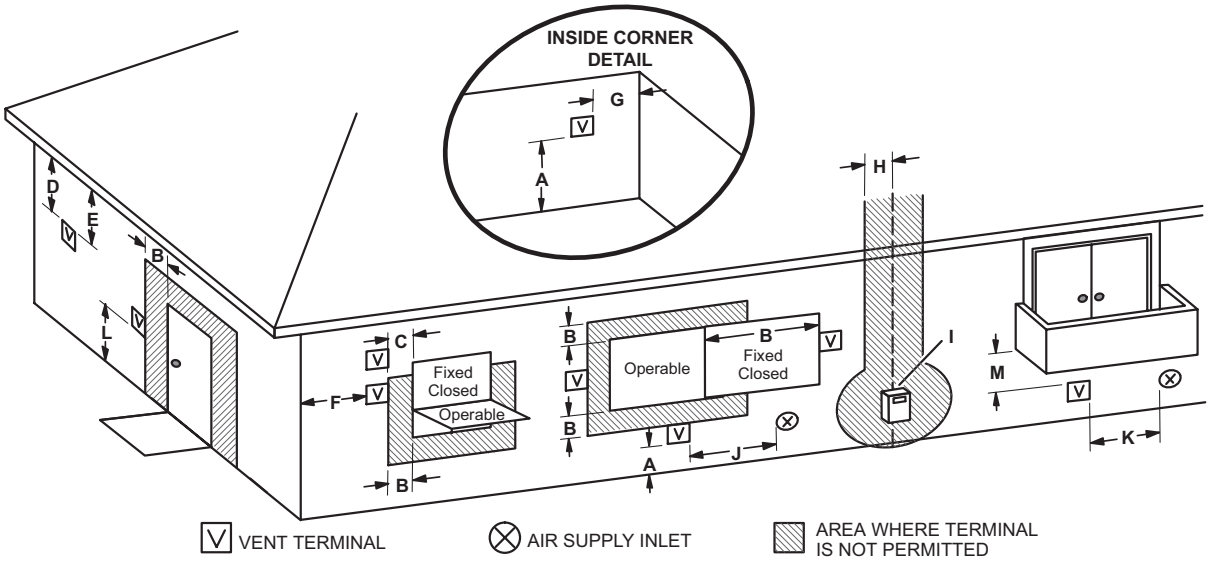


| | | US Installations[1] | Canadian Installations[2] |
|---|---|---|---|
| A = | Clearance above grade, veranda, porch, deck or balcony | 12 inches (305mm) or 12 in. (305mm) above average snow accumulation. | 12 inches (305mm) or 12 in. (305mm) above average snow accumulation. |
| B = | Clearance to window or door that may be opened | 6 inches (152mm) for appliances <10,000 Btuh (3kw), 9 inches (228mm) for appliances > 10,000 Btuh (3kw) and <50,000 Btuh (15 kw), 12 inches (305mm) for appliances > 50,000 Btuh (15kw) | 6 inches (152mm) for appliances <10,000 Btuh (3kw), 12 inches (305mm) for appliances > 10,000 Btuh (3kw) and <100,000 Btuh (30kw), 36 inches (.9m) for appliances > 100,000 Btuh (30kw) |
| C = | Clearance to permanently closed window | * 12” | * 12” |
| D = | Vertical clearance to ventilated soffit located above the terminal within a horizontal distance of 2 feet (610mm) from the center line of the terminal | * Equal to or greater than soffit depth | * Equal to or greater than soffit depth |
| E = | Clearance to unventilated soffit | * Equal to or greater than soffit depth | * Equal to or greater than soffit depth |
| F = | Clearance to outside corner | * No minimum to outside corner | * No minimum to outside corner |
| G = | Clearance to inside corner | * | * |
| H = | Clearance to each side of center line extended above meter / regulator assembly | 3 feet (.9m) within a height 15 feet (4.5m) above the meter / regulator assembly | 3 feet (.9m) within a height 15 feet (4.5m) above the meter / regulator assembly |
| I = | Clearance to service regulator vent outlet | * 3 feet (.9m) | 3 feet (.9m) |
| J = | Clearance to non-mechanical air supply inlet to building or the combustion air inlet to any other appliance | 6 inches (152mm) for appliances <10,000 Btuh (3kw), 9 inches (228mm) for appliances > 10,000 Btuh (3kw) and <50,000 Btuh (15 kw), 12 inches (305mm) for appliances > 50,000 Btuh (15kw) | 6 inches (152mm) for appliances <10,000 Btuh (3kw), 12 inches (305mm) for appliances > 10,000 Btuh (3kw) and <100,000 Btuh (30kw), 36 inches (.9m) for appliances > 100,000 Btuh (30kw) |
| K = | Clearance to mechanical air supply inlet | 3 feet (.9m) above if within 10 feet (3m) horizontally | 6 feet (1.8m) |
| L = | Clearance above paved sidewalk or paved driveway located on public property | * 7 feet (2.1m) | 7 feet (2.1m)† |
| M = | Clearance under veranda, porch, deck or balcony | *12 inches (305mm)‡ | 12 inches (305mm)‡ |

[1] In accordance with the current ANSI Z223.1/NFPA 54 Natural Fuel Gas Code

[2] In accordance with the current CSA B149.1, Natural Gas and Propane Installation Code

† A vent shall not terminate directly above a sidewalk or paved driveway that is located between two single family dwellings and serves both dwellings.

‡ Permitted only if veranda, porch, deck or balcony is fully open on a minimum of two sides beneath the floor. Lennox recommends avoiding this location if possible.

*For clearances not specified in ANSI Z223.1/NFPA 54 or CSA B149.1, clearance will be in accordance with local installation codes and the requirements of the gas supplier and these installation instructions.”

***NOTE -*** *This figure is intended to illustrate clearance requirements and does not serve as a substitute for locally adopted installation codes.*

**FIGURE 33**

**Details of Intake and Exhaust Piping Terminations for Direct Vent Installations**

***NOTE -*** *In Direct Vent installations, combustion air is taken from outdoors and flue gases are discharged to outdoors.*

***NOTE -*** *Flue gas may be slightly acidic and may adversely affect some building materials. If any vent termination is used and the flue gases may impinge on the building material, a corrosion-resistant shield (minimum 24 inches square) should be used to protect the wall surface. If the optional tee is used, the protective shield is recommended. The shield should be constructed using wood, plastic, sheet metal or other suitable material. All seams, joints, cracks, etc. in the affected area should be sealed using an appropriate sealant. See FIGURE 42.*

Intake and exhaust pipes may be routed either horizontally through an outside wall or vertically through the roof. In attic or closet installations, vertical termination through the roof is preferred. FIGURE 34 through FIGURE 41 show typical terminations.

1 - Intake and exhaust terminations are not required to be in the same pressure zone. You may exit the intake on one side of the structure and the exhaust on another side (FIGURE 35). You may exit the exhaust out the roof and the intake out the side of the structure (FIGURE 36).

2 - Intake and exhaust pipes should be placed as close together as possible at termination end (refer to illustrations). Maximum separation is 3” (76MM) on roof terminations and 6” (152MM) on side wall terminations.

***NOTE -*** *When venting in different pressure zones, the maximum separation requirement of intake and exhaust pipe DOES NOT apply.*

3 - On roof terminations, the intake piping should terminate straight down using two 90° elbows (See FIGURE 34).

4 - Exhaust piping must terminate straight out or up as shown. A reducer may be required on the exhaust piping at the point where it exits the structure to improve the velocity of exhaust away from the intake piping. See TABLE 8.

***NOTE -*** *Care must be taken to avoid recirculation of exhaust back into intake pipe.*

5 - On field-supplied terminations for side wall exit, exhaust piping may extend a maximum of 12 inches (305MM) for 2” PVC and 20 inches (508MM) for 3” (76MM) PVC beyond the outside wall. Intake piping should be as short as possible. See FIGURE 42.

6 - On field-supplied terminations, a minimum distance between the end of the exhaust pipe and the end of the intake pipe without a termination elbow is 8” and a minimum distance of 6” with a termination elbow. See FIGURE 42.

7 - If intake and exhaust piping must be run up a side wall to position above snow accumulation or other obstructions, piping must be supported.

At least one bracket must be used within 6” from the top of the elbow and then every 24” (610mm) as shown in FIGURE 42, to prevent any movement in any direction. When exhaust and intake piping must be run up an outside wall, the exhaust piping must be terminated with pipe sized per TABLE 8.The intake piping may be equipped with a 90° elbow turndown. Using turndown will add 5 feet (1.5m) to the equivalent length of the pipe.

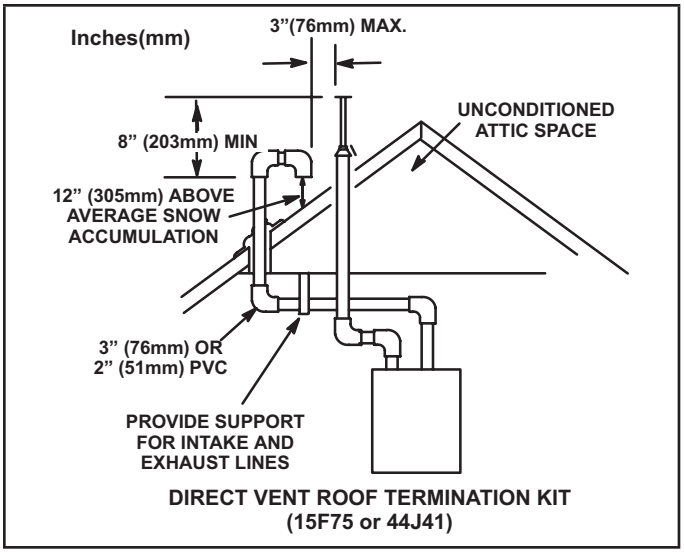


**FIGURE 34**

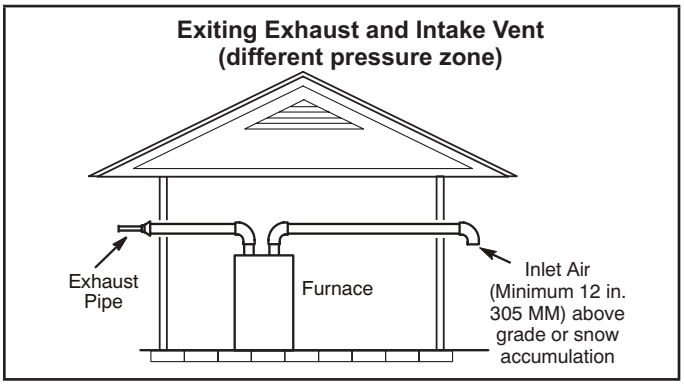


**FIGURE 35**

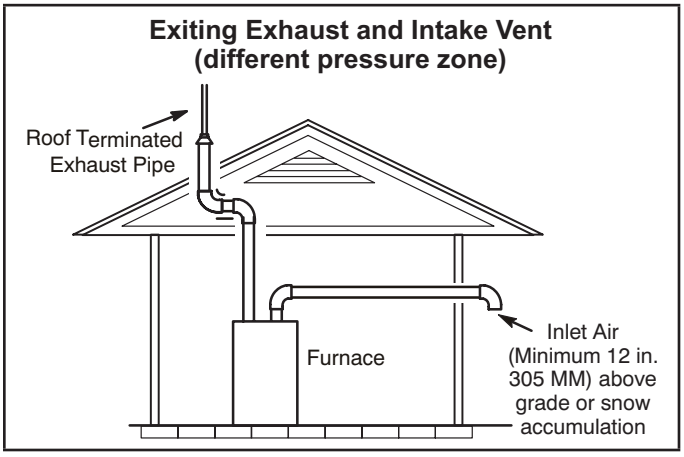


**FIGURE 36**

**TABLE 8**

EXHAUST PIPE TERMINATION SIZE REDUCTION

| ML296UHVK Model | Termination Pipe Size |
|---|---|
| *045 and 070 | 1-1/2” (38MM) |
| *090 | 2” (51MM) |
| 110 | 2” (51MM) |

*ML296UHVK-045, -070 and -090 units with the flush mount termination must use the 1-1/2”accelerator supplied with the kit.

8 - A multiple furnace installation may use a group of up to four terminations assembled together horizontally, as shown in FIGURE 40.

.

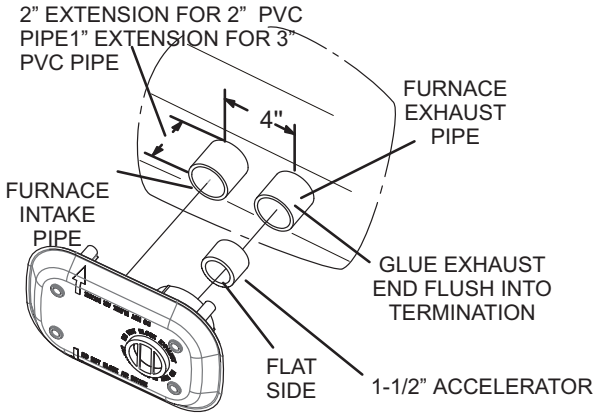


**FLUSH-MOUNT SIDE WALL TERMINATION KIT**
**51W11 (US) or 51W12 (Canada)**

**FIGURE 37**

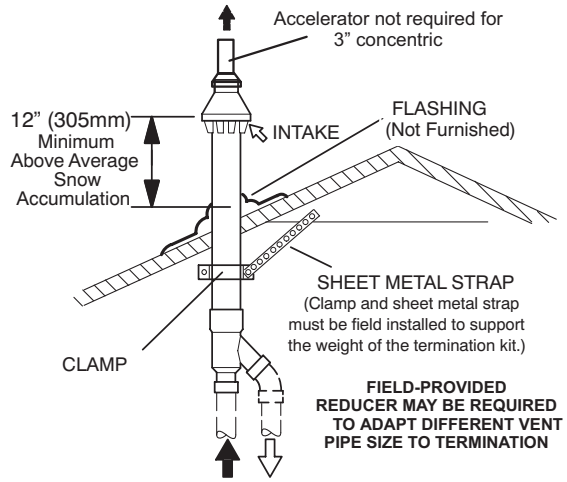


**DIRECT VENT CONCENTRIC ROOFTOP TERMINATION**
**71M80, 69M29 or 60L46 (US)**
**44W92 or 44W93 (Canada)**

**FIGURE 38**

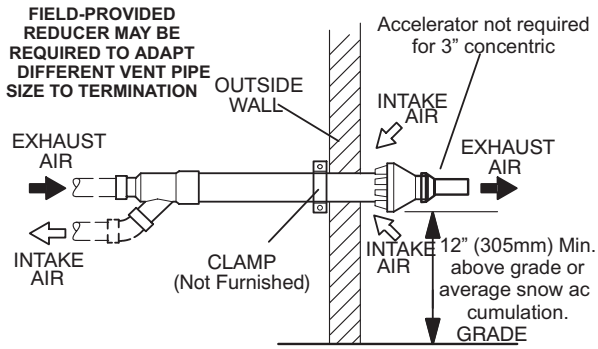


**DIRECT VENT CONCENTRIC WALL TERMINATION**
**71M80, 69M29 or 60L46 (US)**
**44W92 or 44W93 (Canada)**

**FIGURE 39**

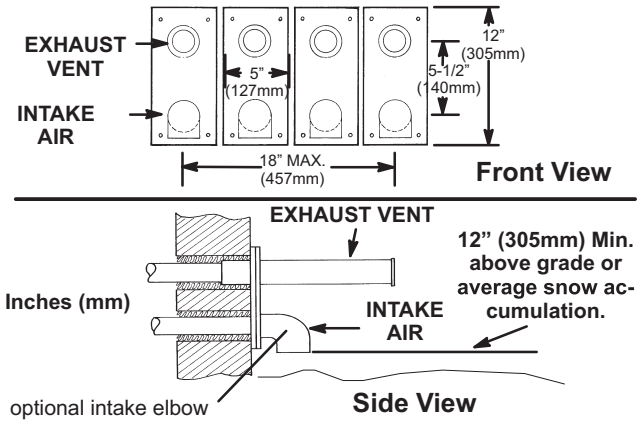


**OPTIONAL VENT TERMINATION FOR MULTIPLE UNIT INSTALLATION OF DIRECT VENT WALL TERMINATION KIT (30G28 or 81J20)**

**FIGURE 40**

**DIRECT VENT APPLICATION USING EXISTING CHIMNEY**

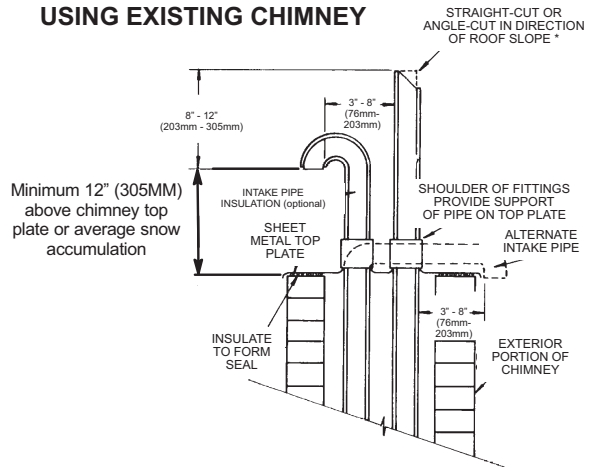


NOTE - Do not discharge exhaust gases directly into any chimney or vent stack. If vertical discharge through an existing unused chimney or stack is required, insert piping inside chimney until the pipe open end is above top of chimney and terminate as illustrated. In any exterior portion of chimney, the exhaust vent must be insulated.

**FIGURE 41**

## FIELD FABRICATED WALL TERMINATION

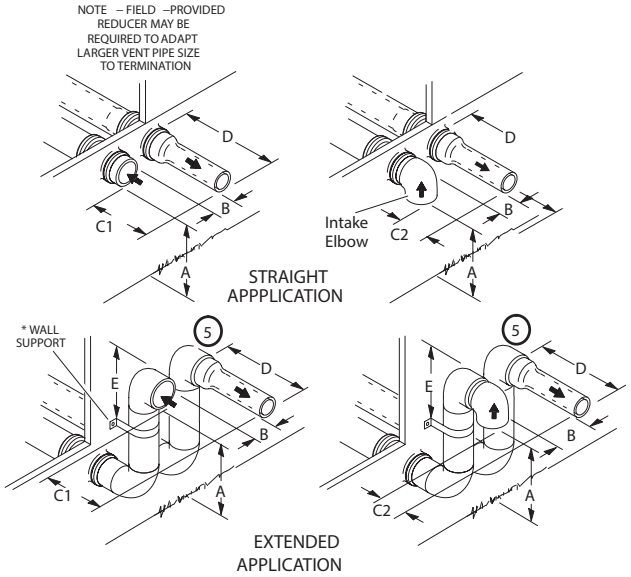


| | 2" (51mm) Vent Pipe | 3" (76mm) Vent Pipe |
|---|---|---|
| **A**– Minimum clearance above grade or average snow accumulation | 12" (305 mm) | 12" (305 mm) |
| **B**– Maximum horizontal separation between intake and exhaust | 6" (152 mm) | 6" (152 mm) |
| **C1** -Minimum from end of exhaust to inlet of intake | 8" (203 mm) | 8" (203 mm) |
| **C2** -Minimum from end of exhaust to inlet of intake | 6" (152 mm) | 6" (152 mm) |
| **D**– Maximum exhaust pipe length | 12" (305 mm) | 20" (508 mm) |
| **E**– Maximum wall support distance from top of each pipe (intake/exhaust) | 6" (152 mm) | 6" (152 mm) |

See maximum allowable venting tables for venting lengths with this arrangement.

* Use wall support every 24" (610 mm). Use two wall supports if extension is greater than 24" (610 mm) but less than 48" (1219 mm).

NOTE – One wall support must be within 6" (152 mm) from top of each pipe (intake and exhaust) to prevent movement in any direction.

## ALTERNATE TERMINATIONS (TEE & FORTYFIVE DEGREE ELBOWS ONLY)

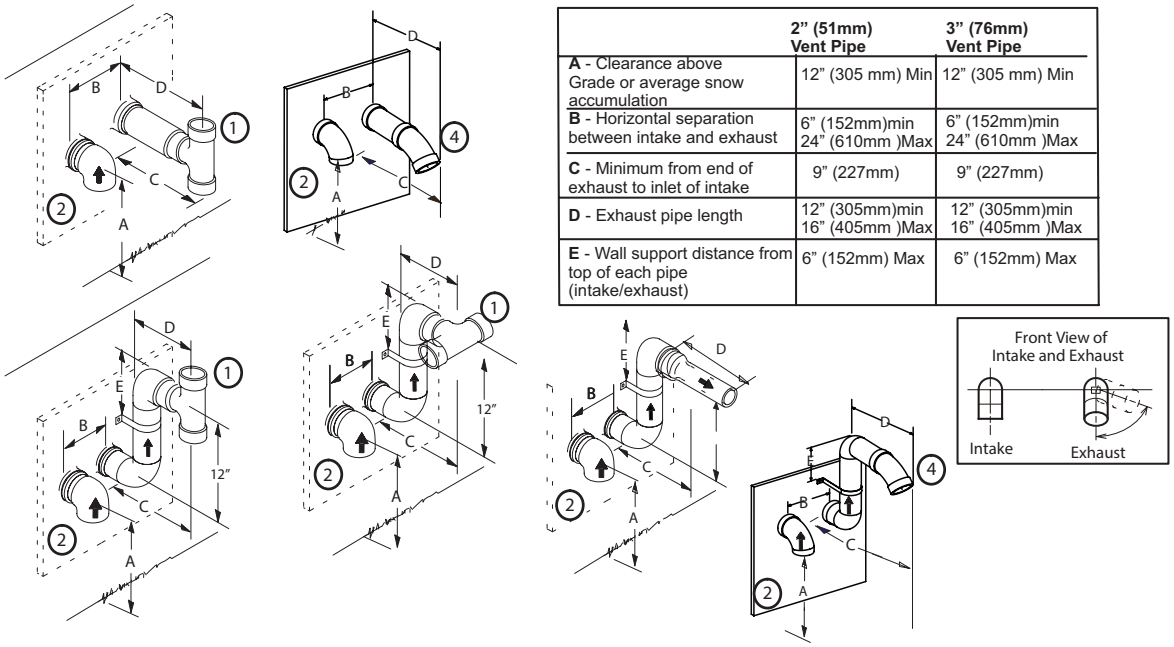


| | 2" (51mm) Vent Pipe | 3" (76mm) Vent Pipe |
|---|---|---|
| **A** - Clearance above Grade or average snow accumulation | 12" (305 mm) Min | 12" (305 mm) Min |
| **B** - Horizontal separation between intake and exhaust | 6" (152mm)min<br>24" (610mm )Max | 6" (152mm)min<br>24" (610mm )Max |
| **C** - Minimum from end of exhaust to inlet of intake | 9" (227mm) | 9" (227mm) |
| **D** - Exhaust pipe length | 12" (305mm)min<br>16" (405mm )Max | 12" (305mm)min<br>16" (405mm )Max |
| **E** - Wall support distance from top of each pipe (intake/exhaust) | 6" (152mm) Max | 6" (152mm) Max |

[1] The exhaust termination tee should be connected to the 2" or 3" PVC flue pipe as shown in the illustration. In horizontal tee applications there must be be a minimum of 3 ft away from covered patios or any living ares and cannot be within 3 ft of a window. Do not use an accelerator in applications that include an exhaust termination tee. The accelerator is not required.

[2] As required. Flue gas may be acidic and may adversely affect some building materials. If a side wall vent termination is used and flue gases will impinge on the building materials, a corrosion –resistant shield (24 inches square) should be used to protect the wall surface. If optional tee is used, the protective shield is recommended. The shield should be constructed using wood, sheet metal or other suitable material. All seams, joints, cracks, etc. in affected area, should be sealed using an appropriate sealant.

[3] Exhaust pipe 45 ° elbow can be rotated to the side away from the combustion air inlet to direct exhaust away from adjacent property. The exhaust must never be directed toward the combustion air inlet.

[4] Exhaust pipe can be rotated from the 12 o'clock position down to the 4 o' clock position

[5] Exhaust pipe in double snorkel applications can use a 45 as an option to the accelerator tip.

**FIGURE 42**

### Details of Exhaust Piping Terminations for No- Direct Vent Applications

Exhaust pipes may be routed either horizontally through an outside wall or vertically through the roof. In attic or closet installations, vertical termination through the roof is preferred. FIGURE 43 and FIGURE 44 show typical terminations.

1 - Exhaust piping must terminate straight out or up as shown. The termination pipe must be sized as listed in TABLE 8.The specified pipe size ensures proper velocity required to move the exhaust gases away from the building.

2 - On field supplied terminations for side wall exit, exhaust piping may extend a maximum of 12 inches (305MM) for 2” PVC and 20 inches (508MM) for 3” (76MM) PVC beyond the outside wall.

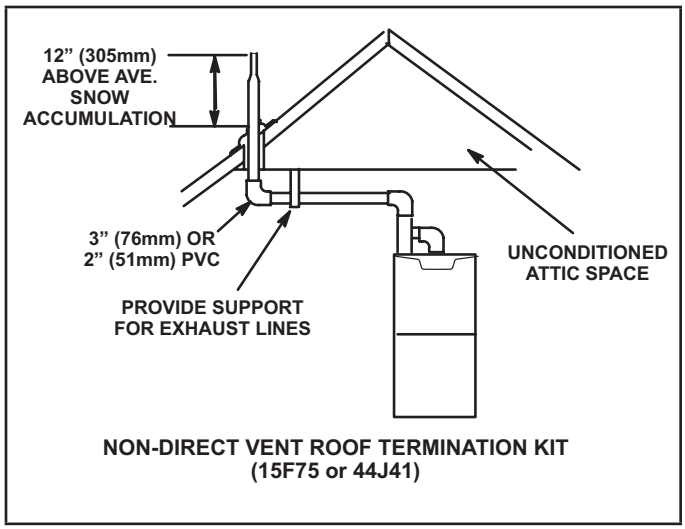


FIGURE 43

3 - If exhaust piping must be run up a side wall to position above snow accumulation or other obstructions, piping must be supported every 24 inches (610MM). When exhaust piping must be run up an outside wall, any reduction in exhaust pipe size must be done after the final elbow.

4 - Distance between exhaust pipe terminations on multiple furnaces must meet local codes.

### Crawl Space and Extended Horizontal Venting

Lennox provides kit 51W18 to install 2” or 3” PVC exhaust piping through the floor joists and into the crawl space. See FIGURE 45.

This kit can also be used as a supplemental drain for installations with condensate run back in the vent pipe (ie. long horizontal runs, unconditioned spaces, etc.).

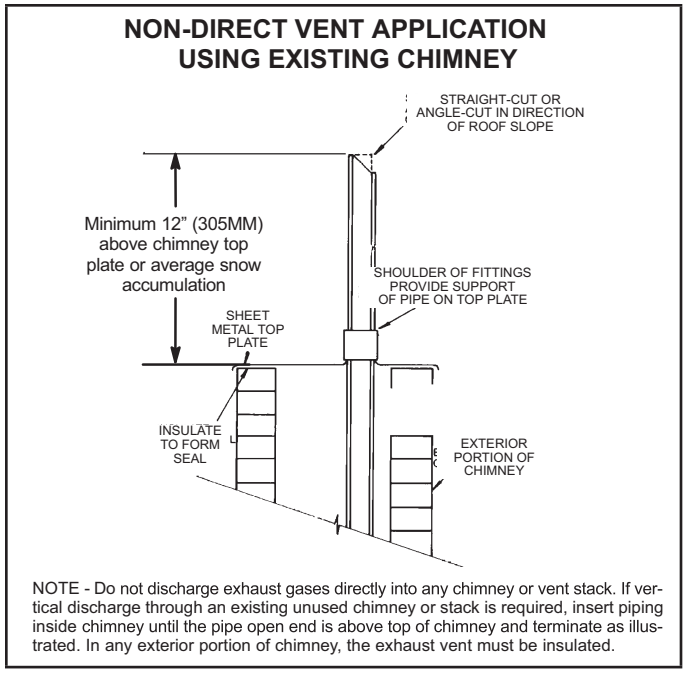


FIGURE 44

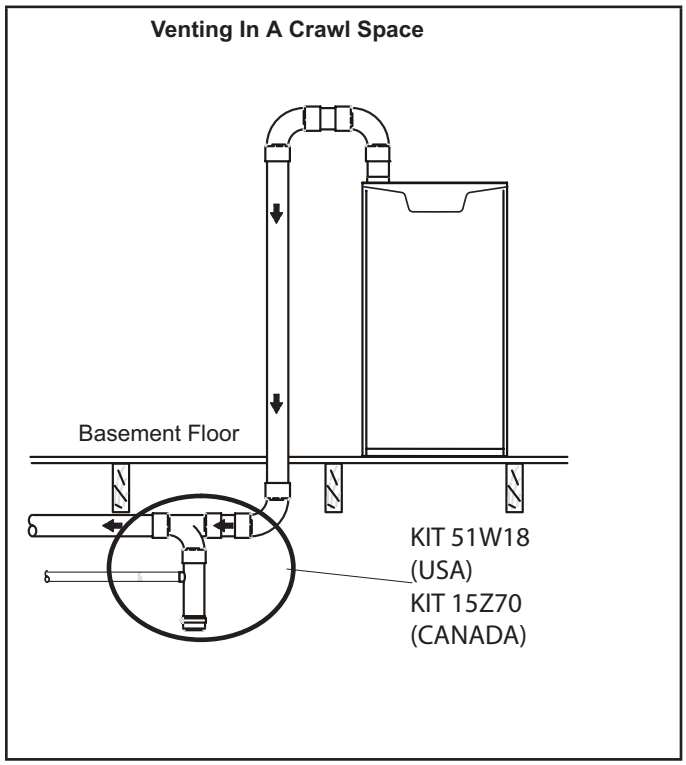


FIGURE 45

### Condensate Piping

This unit is designed for either right- or left-side exit of condensate piping in upflow applications. In horizontal applications, the condensate trap must extend below the unit. An 8” service clearance is required for the condensate trap. Refer to FIGURE 46 and FIGURE 48 for condensate trap locations. FIGURE 54 shows trap assembly using 1/2” PVC or 3/4” PVC.

***NOTE -*** *If necessary the condensate trap may be installed up to 5’ away from the furnace. Use PVC pipe to connect trap to furnace condensate outlet. Piping from furnace must slope down a minimum of 1/4” per ft. toward trap.*

1 - Determine which side condensate piping will exit the unit, location of trap, field-provided fittings and length of PVC pipe required to reach available drain.

2 - Use a large flat head screw driver or a 1/2” drive socket extension and remove plug (FIGURE 46) from the cold end header box at the appropriate location on the side of the unit. Install provided 3/4 NPT street elbow fitting into cold end header box. Use Teflon tape or appropriate pipe dope.

***NOTE -*** *Cold end header box drain plugs are factory installed. Check the unused plug for tightness to prevent leakage.*

3 - Install the cap over the clean out opening at the base of the trap. Secure with clamp. See FIGURE 54.

4 - Install drain trap using appropriate PVC fittings, glue all joints. Glue the provided drain trap as shown in FIGURE 54. Route the condensate line to an open drain. Condensate line must maintain a 1/4” downward slope from the furnace to the drain.

5 - FIGURE 49 and FIGURE 50 show the furnace and evaporator coil using a separate drain. If necessary the condensate line from the furnace and evaporator coil can drain together. See FIGURE 51, FIGURE 52 and FIGURE 53.

***Upflow furnace (FIGURE 52)*** - In upflow furnace applications the field provided vent must be a minimum 1” to a maximum 2” length above the condensate drain outlet connection. Any length above 2” may result in a flooded heat exchanger if the combined primary drain line were to become restricted.

***Horizontal furnace (FIGURE 53)*** - In horizontal furnace applications the field provided vent must be a minimum 4” to a maximum 5” length above the condensate drain outlet connection. Any length above 5” may result in a flooded heat exchanger if the combined primary drain line were to become restricted.

CONDENSATE TRAP AND PLUG LOCATIONS
(Unit shown in upflow position)

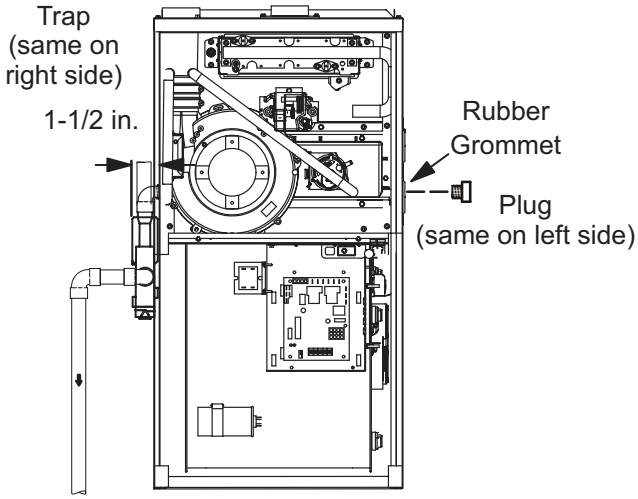


*NOTE - In upflow applications where side return air filter is installed on same side as the condensate trap, filter rack must be installed beyond condensate trap or trap must be re-located to avoid interference.*

**FIGURE 46**

***NOTE -*** *In horizontal applications it is recommended to install a secondary drain pan underneath the unit and trap assembly.*

***NOTE -*** *Appropriately sized tubing and barbed fitting may be used for condensate drain. Attach to the drain on the trap using a hose clamp. See FIGURE 47.*

**Field Provided Drain Components**

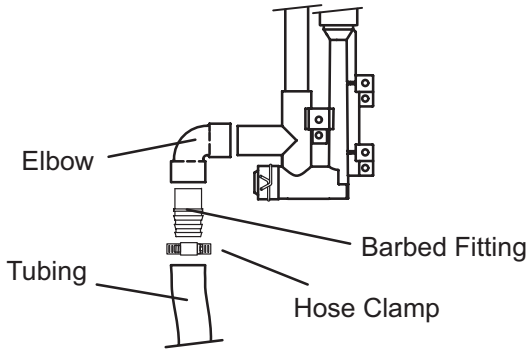


**FIGURE 47**

## ⚠ CAUTION

Do not use copper tubing or existing copper condensate lines for drain line.

6 - If unit will be started immediately upon completion of installation, prime trap per procedure outlined in Unit Start-Up section.

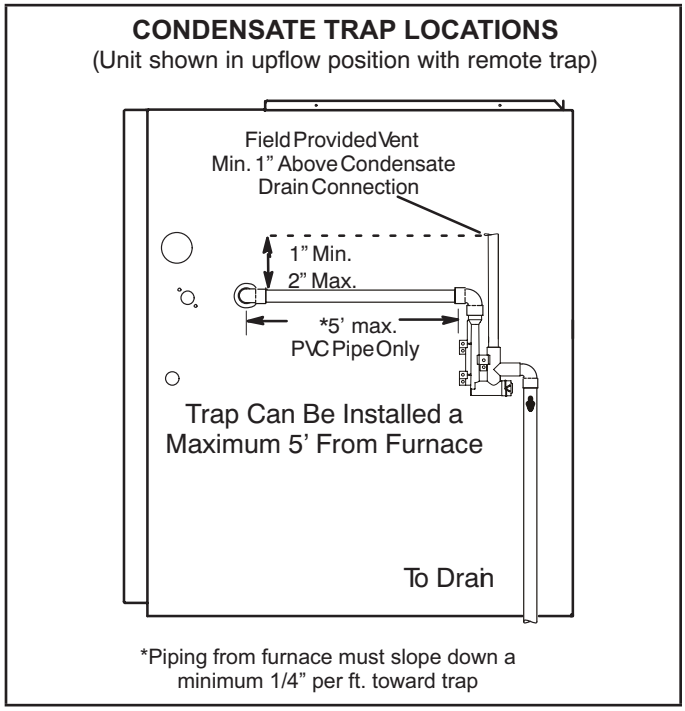


**FIGURE 48**

Condensate line must slope downward away from the trap to drain. If drain level is above condensate trap, condensate pump must be used. Condensate drain line should be routed within the conditioned space to avoid freezing of condensate and blockage of drain line. If this is not possible, a heat cable kit may be used on the condensate trap and line. Heating cable kit is available from Lennox in various lengths; 6 ft. (1.8m) - kit no. 26K68; 24 ft. (7.3m) - kit no. 26K69; and 50 ft. (15.2m) - kit no. 26K70.

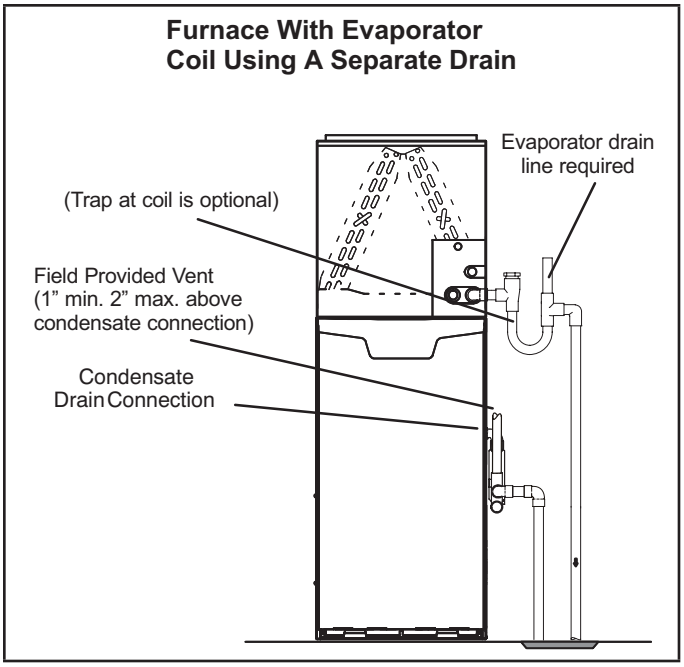


**FIGURE 49**

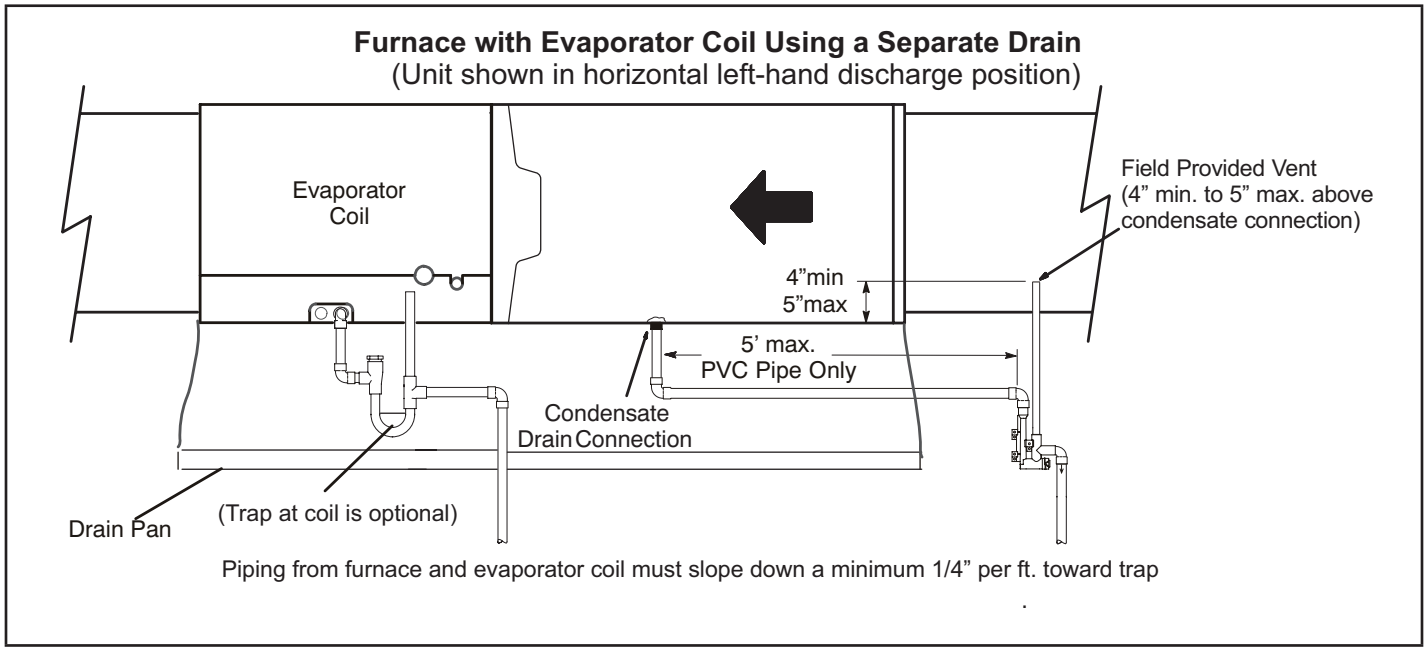


**FIGURE 50**

## ⚠ IMPORTANT

When combining the furnace and evaporator coil drains together, the A/C condensate drain outlet must be vented to relieve pressure in order for the furnace pressure switch to operate properly.

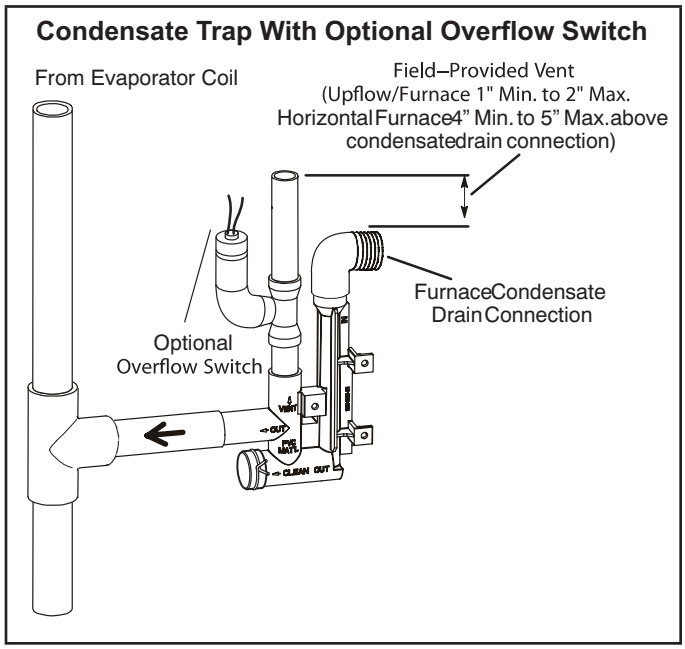


FIGURE 51

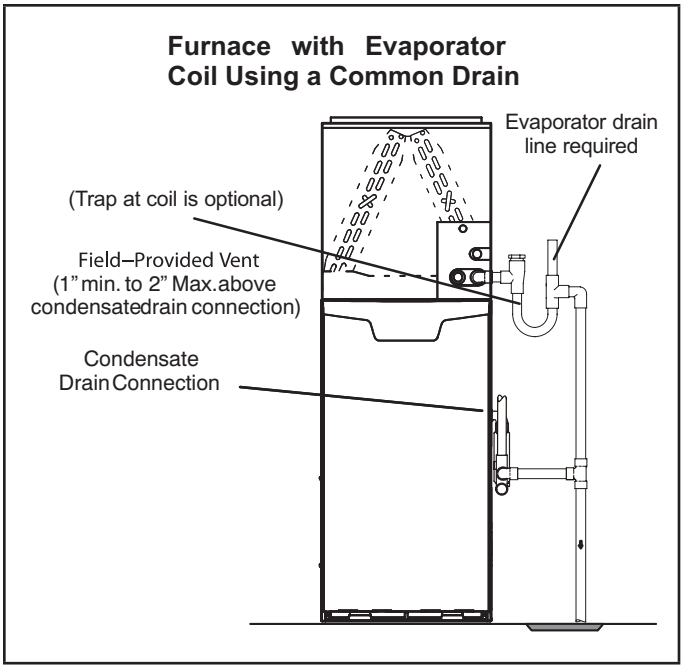


FIGURE 52

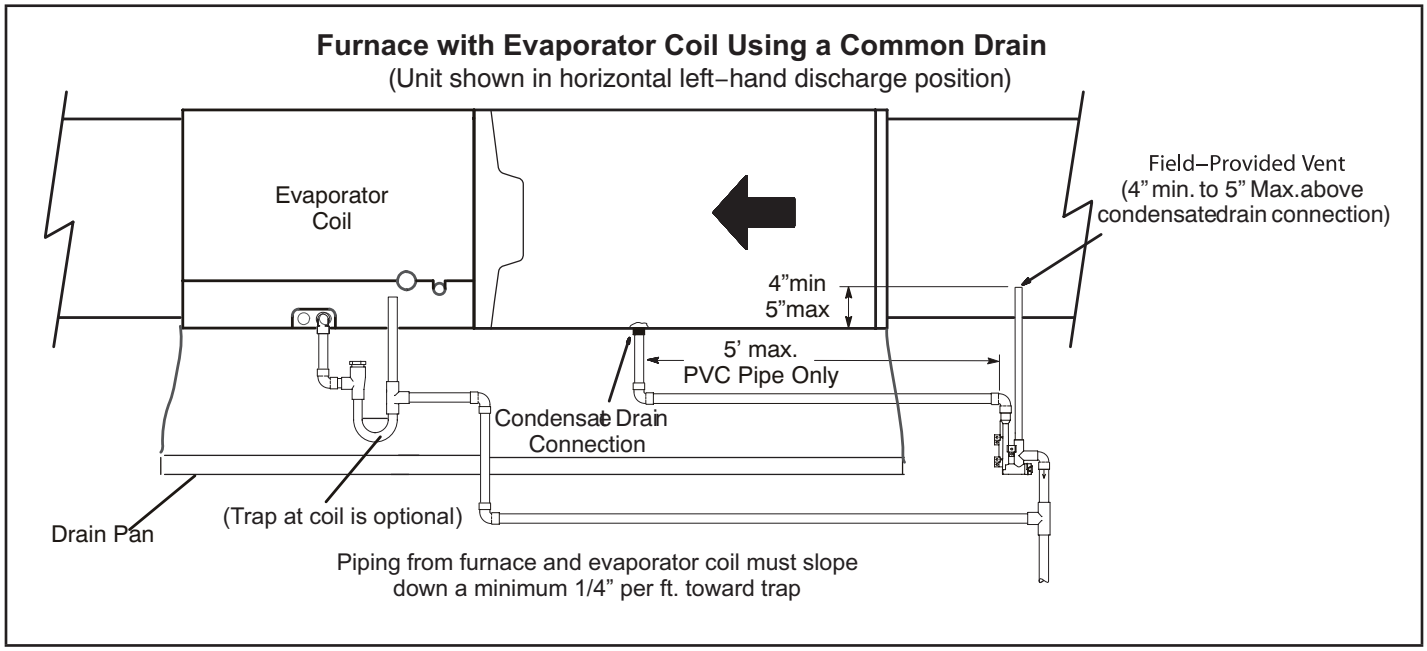


FIGURE 53

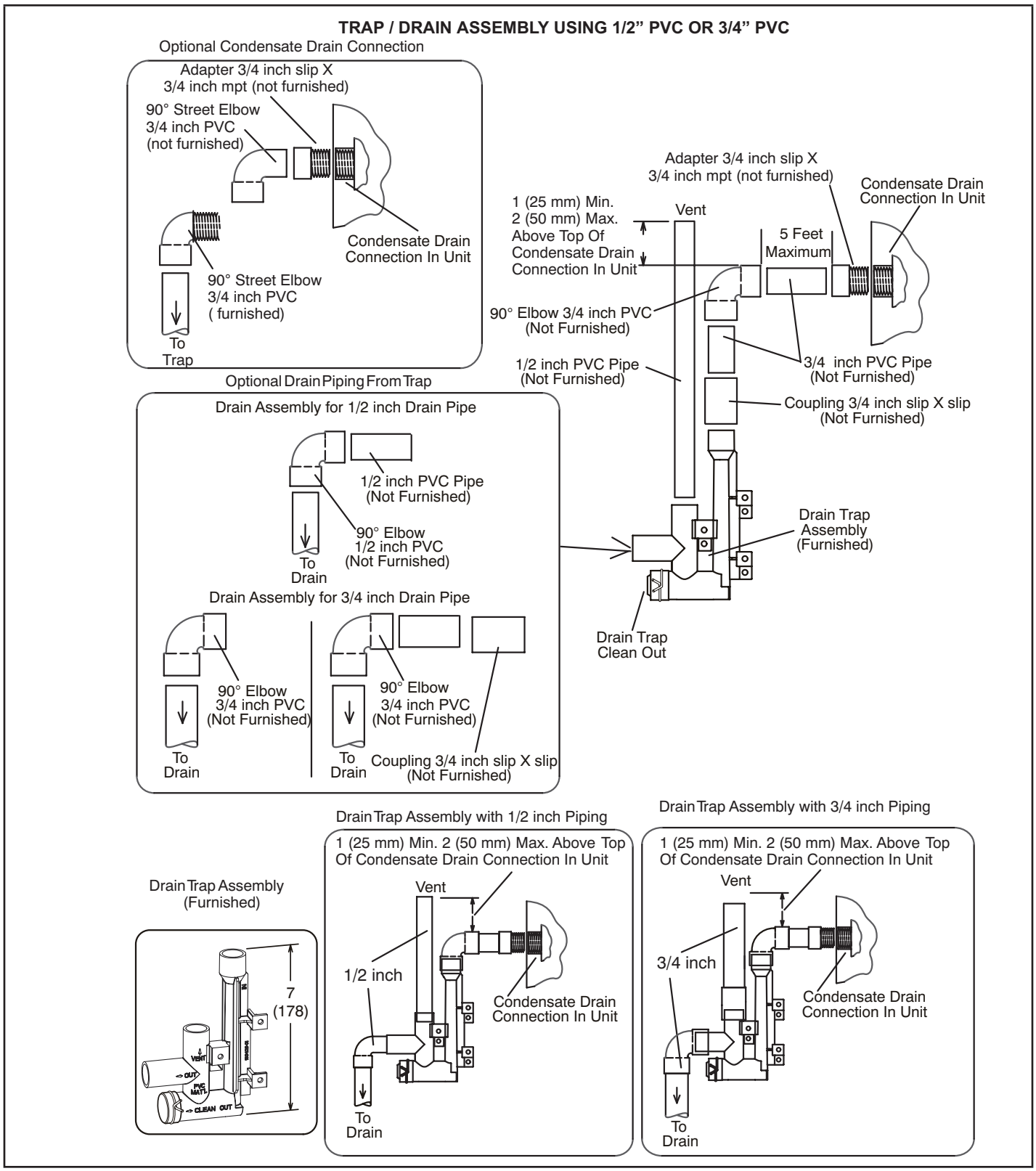
TRAP / DRAIN ASSEMBLY USING 1/2" PVC OR 3/4" PVC
Optional Condensate Drain Connection
Adapter 3/4 inch slip X
3/4 inch mpt (not furnished)
90° Street Elbow
3/4 inch PVC
(not furnished)
Condensate Drain
Connection In Unit
90° Street Elbow
3/4 inch PVC
( furnished)
To
Trap
Optional Drain Piping From Trap
Drain Assembly for 1/2 inch Drain Pipe
1/2 inch PVC Pipe
(Not Furnished)
90° Elbow
1/2 inch PVC
(Not Furnished)
To
Drain
Drain Assembly for 3/4 inch Drain Pipe
90° Elbow
3/4 inch PVC
(Not Furnished)
To
Drain
90° Elbow
3/4 inch PVC
(Not Furnished)
To
Drain
Coupling 3/4 inch slip X slip
(Not Furnished)
Adapter 3/4 inch slip X
3/4 inch mpt (not furnished)
Condensate Drain
Connection In Unit
1 (25 mm) Min.
2 (50 mm) Max.
Above Top Of
Condensate Drain
Connection In Unit
Vent
5 Feet
Maximum
90° Elbow 3/4 inch PVC
(Not Furnished)
1/2 inch PVC Pipe
(Not Furnished)
3/4 inch PVC Pipe
(Not Furnished)
Coupling 3/4 inch slip X slip
(Not Furnished)
Drain Trap
Assembly
(Furnished)
Drain Trap
Clean Out
Drain Trap Assembly
(Furnished)
7
(178)
Drain Trap Assembly with 1/2 inch Piping
1 (25 mm) Min. 2 (50 mm) Max. Above Top
Of Condensate Drain Connection In Unit
Vent
1/2 inch
Condensate Drain
Connection In Unit
To
Drain
Drain Trap Assembly with 3/4 inch Piping
1 (25 mm) Min. 2 (50 mm) Max. Above Top
Of Condensate Drain Connection In Unit
Vent
3/4 inch
Condensate Drain
Connection In Unit
To
Drain

**FIGURE 54**

## Gas Piping

Gas supply piping should not allow more than 0.5”W.C. drop in pressure between gas meter and unit. Supply gas pipe must not be smaller than unit gas connection.

**⚠ CAUTION**

If a flexible gas connector is required or allowed by the authority that has jurisdiction, black iron pipe shall be installed at the gas valve and extend outside the furnace cabinet. The flexible connector can then be added between the black iron pipe and the gas supply line.

**⚠ WARNING**

Do not over torque (800 in-lbs) or under torque (350 in-lbs) when attaching the gas piping to the gas valve.

1 - Gas piping may be routed into the unit through either the left-or right-hand side. Supply piping enters into the gas valve from the side of the valve as shown in FIGURE 56. Connect the gas supply piping into the gas valve. The maximum torque is 800 in lbs and minimum torque is 350 in lbs when attaching the gas piping to the gas valve.

2 - When connecting gas supply, factors such as length of run, number of fittings and furnace rating must be considered to avoid excessive pressure drop. TABLE 9 lists recommended pipe sizes for typical applications.

***NOTE -*** *Use two wrenches when connecting gas piping to avoid transferring torque to the manifold.*

3 - Gas piping must not run in or through air ducts, clothes chutes, chimneys or gas vents, dumb waiters or elevator shafts. Center gas line through piping hole. Gas line should not touch side of unit. See FIGURE 56 and FIGURE 57.

4 - Piping should be sloped 1/4 inch per 15 feet (6mm per 5.6m) upward toward the gas meter from the furnace. The piping must be supported at proper intervals, every 8 to 10 feet (2.44 to 3.05m), using suitable hangers or straps. Install a drip leg in vertical pipe runs to serve as a trap for sediment or condensate.

5 - A 1/8” N.P.T. plugged tap or pressure post is located on the gas valve to facilitate test gauge connection. See FIGURE 64.

6 - In some localities, codes may require installation of a manual main shut-off valve and union (furnished by installer) external to the unit. Union must be of the ground joint type.

**⚠ IMPORTANT**

Compounds used on threaded joints of gas piping must be resistant to the actions of liquefied petroleum gases.

### Leak Check

After gas piping is completed, carefully check all field-installed piping connections for gas leaks. Use a commercially available leak detecting solution specifically manufactured for leak detection. Never use an open flame to test for gas leaks.

*The furnace must be isolated from the gas supply system by closing the individual manual shut-off valve during any gas supply system at pressures greater than or equal to ½ psig. (3.48 kPa, 14 inches w.c.). This furnace and its components are designed, manufactured and independently certified to comply with all applicable ANSI/CSA standards. A leak check of the furnace and its components is not required.*

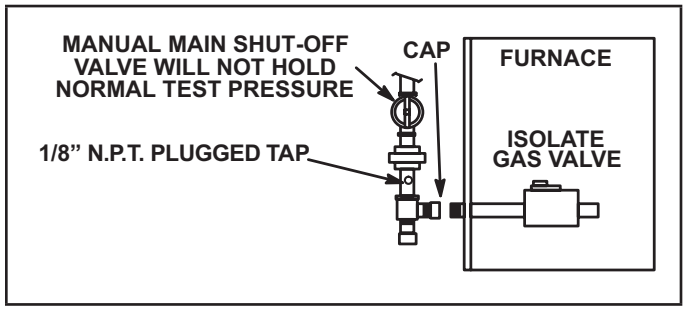


**FIGURE 55**

**⚠ IMPORTANT**

When testing pressure of gas lines, gas valve must be disconnected and isolated. See FIGURE 55. Gas valves can be damaged if subjected to pressures greater than 1/2 psig (3.48 kPa).

**⚠ WARNING**

FIRE OR EXPLOSION HAZARD

Failure to follow the safety warnings exactly could result in serious injury, death, or property damage. Never use an open flame to test for gas leaks. Check all connections using a commercially available soap solution made specifically for leak detection. Some soaps used for leak detection are corrosive to certain metals. Carefully rinse piping thoroughly after leak test has been completed.

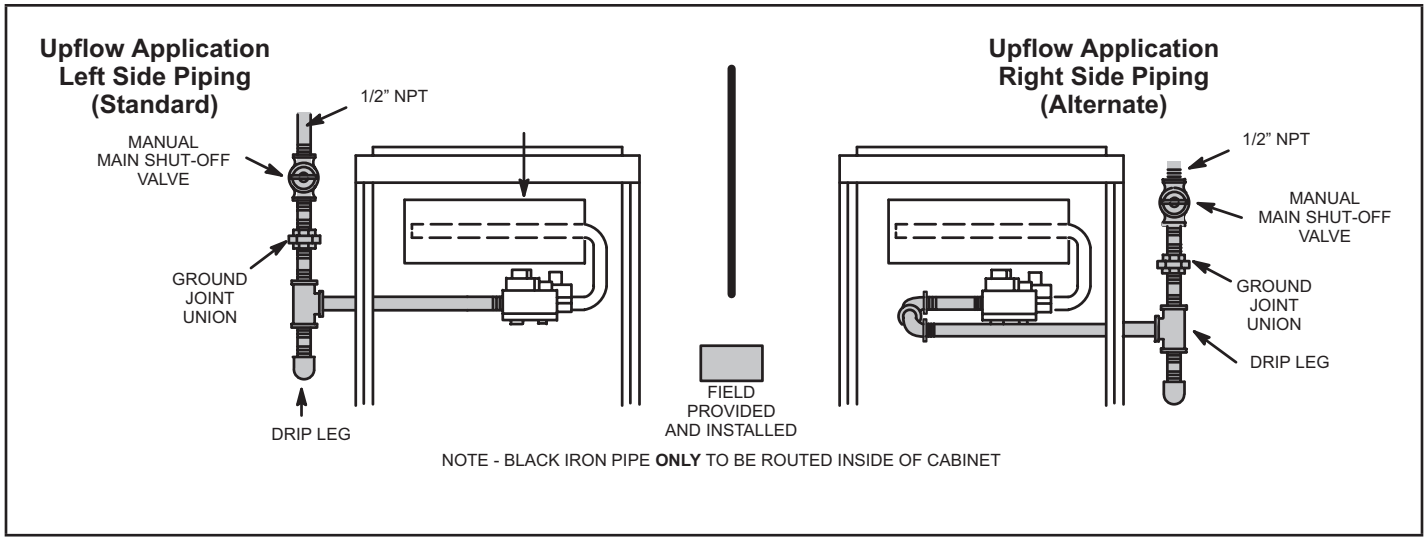


**FIGURE 56**

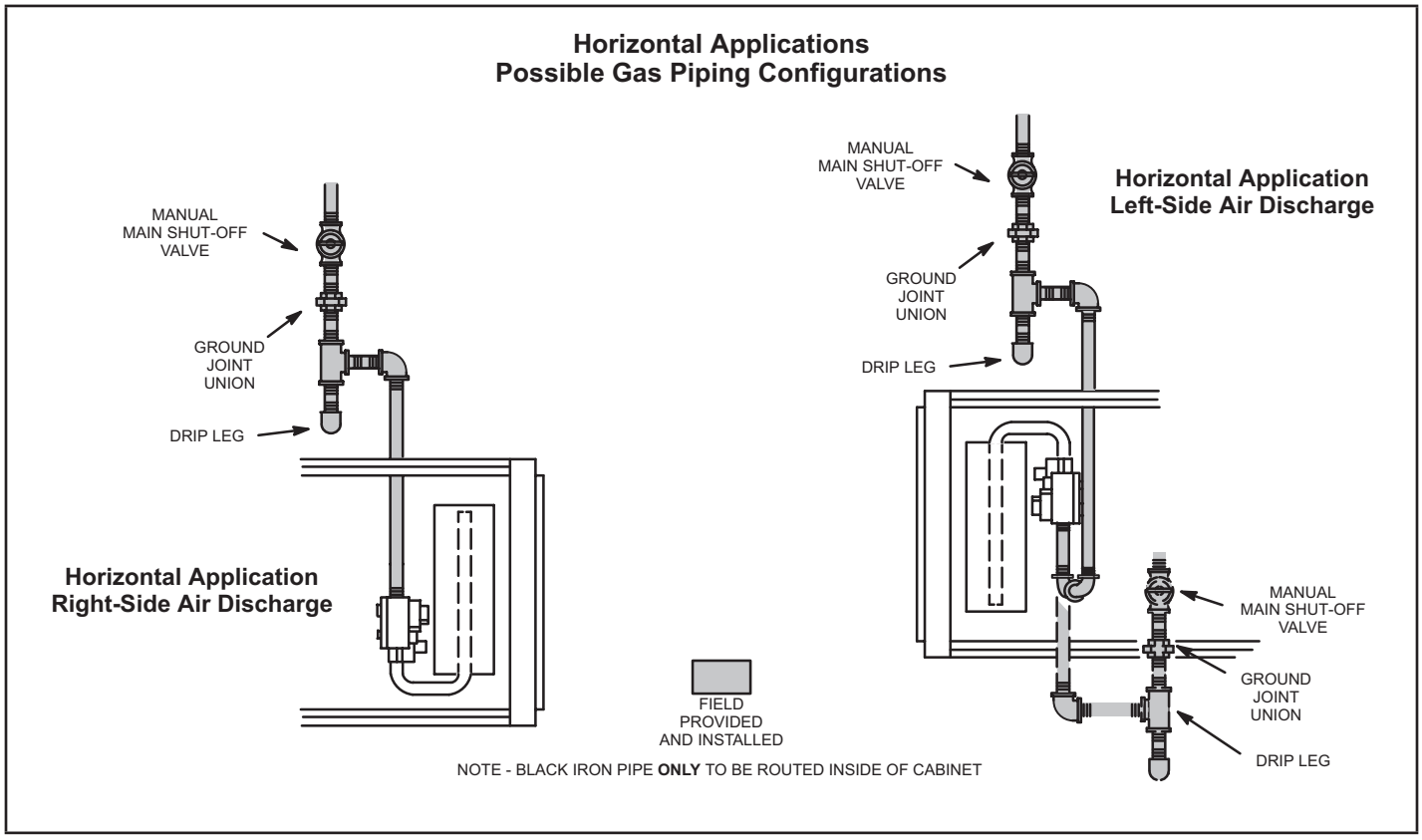


**FIGURE 57**

**TABLE 9**

**Gas Pipe Capacity - ft3/hr (m3/hr)**

| Nominal Iron Pipe Size Inches (mm) | Internal Diameter inches (mm) | Length of Pipe - feet (m) | | | | | | | | | |
|---|---|---|---|---|---|---|---|---|---|---|---|
| | | 10 (3.048) | 20 (6.096) | 30 (9,144) | 40 (12,192) | 50 (15.240) | 60 (18.288) | 70 (21.336) | 80 (24.384) | 90 (27.432) | 100 (30,480) |
| 1/2 (12.7) | .622 (17.799) | 172 (4.87) | 118 (3.34) | 95 (2.69) | 81 (2.29) | 72 (2.03) | 65 (1.84) | 60 (1.69) | 56 (1.58) | 52 (1.47) | 50 (1.42) |
| 3/4 (19.05) | .824 (20.930) | 360 (10.19) | 247 (7.000) | 199 (5.63) | 170 (4.81) | 151 (4.23) | 137 (3.87) | 126 (3.56) | 117 (3.31) | 110 (3.11) | 104 (2.94) |
| 1 (25.4) | 1.049 (26.645) | 678 (19.19) | 466 (13.19) | 374 (10.59) | 320 (9.06) | 284 (8.04) | 257 (7.27) | 237 (6.71) | 220 (6.23) | 207 (5.86) | 195 (5.52) |
| 1-1/4 (31.75) | 1.380 (35.052) | 1350 (38.22) | 957 (27.09) | 768 (22.25) | 657 (18.60) | 583 (16.50) | 528 (14.95) | 486 (13.76) | 452 (12.79) | 424 (12.00) | 400 (11.33) |
| 1-1/2 (38.1) | 1.610 (40.894) | 2090 (59.18) | 1430 (40.49) | 1150 (32.56) | 985 (27.89) | 873 (24.72) | 791 (22.39) | 728 (20.61) | 677 (19.17) | 635 (17.98) | 600 (17.00) |
| 2 (50.8) | 2.067 (52.502) | 4020 (113.83) | 2760 (78.15) | 2220 (62.86) | 1900 (53.80) | 1680 (47.57) | 1520 (43.04) | 1400 (39.64) | 1300 (36.81) | 1220 (34.55) | 1160 (32.844) |
| 2-1/2 (63.5) | 2.469 (67.713) | 6400 (181.22) | 4400 (124.59) | 3530 (99.95) | 3020 (85.51) | 2680 (75.88) | 2480 (70.22) | 2230 (63.14) | 2080 (58.89) | 1950 (55.22) | 1840 (52.10) |
| 3 (76.2) | 3.068 (77.927) | 11300 (319.98) | 7780 (220.30) | 6250 (176.98) | 5350 (151.49) | 4740 (134.22) | 4290 (121.47) | 3950 (111.85) | 3670 (103.92) | 3450 (97.69) | 3260 (92.31) |

***NOTE -*** *Capacity given in cubic feet (m3 ) of gas per hour and based on 0.60 specific gravity gas.*

## Electrical

**ELECTROSTATIC DISCHARGE (ESD)**
**Precautions and Procedures**

**⚠ CAUTION**

Electrostatic discharge can affect electronic components. Take precautions to neutralize electrostatic charge by touching your hand and tools to metal prior to handling the control.

**⚠ WARNING**

Electric Shock Hazard. Can cause injury or death. Unit must be properly grounded in accordance with national and local codes.

**⚠ WARNING**

Fire Hazard. Use of aluminum wire with this product may result in a fire, causing property damage, severe injury or death. Use copper wire only with this product.

The unit is equipped with a field make-up box on the left hand side of the cabinet. The make-up box may be moved to the right side of the furnace to facilitate installation. If the make-up box is moved to the right side, clip the wire ties that bundle the wires together. The excess wire must be pulled into the blower compartment. Secure the excess wire to the existing harness to protect it from damage.

**INTERIOR MAKE-UP BOX INSTALLATION**

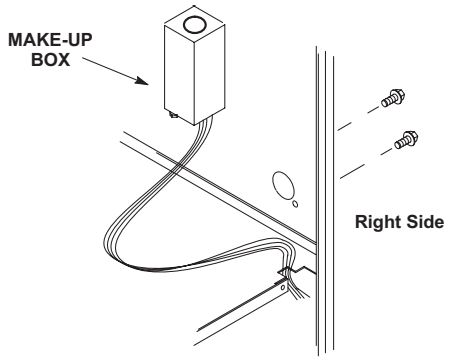


**FIGURE 58**

The power supply wiring must meet Class I restrictions. Protected by either a fuse or circuit breaker, select circuit protection and wire size according to unit nameplate.

**⚠ IMPORTANT**

**When matching this gas furnace with zoning, dual fuel or other 24V accessories, It is recommended to replace the factory installed transformer with kit 27J32.**

**Kit 27J32 contains a 75VA transformer, so you do not overload the original 40VA transformer.**

***NOTE -*** *Unit nameplate states maximum current draw. Maximum over-current protection allowed is shown in TABLE 10.*

**TABLE 10**

| ML296UHVK | Maximum Over-Current |
|---|---|
| 045V36B, 070V36B, 090V48C | 15 |
| 110V60C | 20 |

Holes are on both sides of the furnace cabinet to facilitate wiring.

Install a separate (properly sized) disconnect switch near the furnace so that power can be turned off for servicing.

Before connecting the thermostat or the power wiring, check to make sure the wires will be long enough for servicing at a later date. Remove the blower access panel to check the length of the wire.

Complete the wiring connections to the equipment. Use the provided unit wiring diagram and the field wiring diagram shown in FIGURE 59. Use 18-gauge wire or larger that is suitable for Class II rating for thermostat connections.

**⚠ CAUTION**

Failure to use properly sized wiring and circuit breaker may result in property damage. Size wiring and circuit breaker(s) per Product Specifications bulletin (EHB) and unit rating plate.

Electrically ground the unit according to local codes or, in the absence of local codes, according to the current National Electric Code (ANSI/NFPA No. 70) and current Canadian Electric Code part 1 (CSA standard C22.1) for Canada. A green ground wire is provided in the field make-up box.

NOTE - The ML296UHVK furnace contains electronic components that are polarity sensitive. Make sure that the furnace is wired correctly and is properly grounded.

**Generator Use - Voltage Requirements**

The following requirements must be kept in mind when specifying a generator for use with this equipment:

- The furnace requires 120 volts (Range: 102 volts to 132 volts)
- The furnace operates at 60 Hz + 5% (Range: 57 Hz to 63 Hz)
- The furnace integrated control requires both correct polarity and proper ground. Both polarity and proper grounding should be checked before attempting to operate the furnace on either permanent or temporary power
- Generator should have a wave form distortion of less than 5% THD (total harmonic distortion)

**Electrical Wiring**

The furnace must be grounded and wired in accordance with local codes or, in the absence of local codes, with the National Electrical Code ANSI/NFPA No. 70 (latest edition) and/or CSA C22.1 Electrical Code (latest edition) if an external electrical source is utilized.

In all instances, other than wiring for the thermostat, the wiring to be done and any replacement of wire shall conform with the temperature limitation for Type T wire –635F

(355C) rise.

Connect a sufficiently sized wire with ground to the furnace's line voltage connections and ground wire. Refer to the furnace rating plate for electrical characteristics to be used in sizing field supply wiring and over current protection.

The line voltage supply should be routed through a readily accessible disconnect located within sight of the furnace. A junction box on the furnace side panel is provided for line voltage connections. Refer to the furnace wiring diagram for specific connection information.

**Proper polarity of the supply connections ("HOT" and "NEUTRAL") must be observed to ensure that safety controls provide the protection intended.**

A connection to the unit's ground wire and actual earth ground (typically a ground stake or buried steel pipe) must be maintained for proper operation.

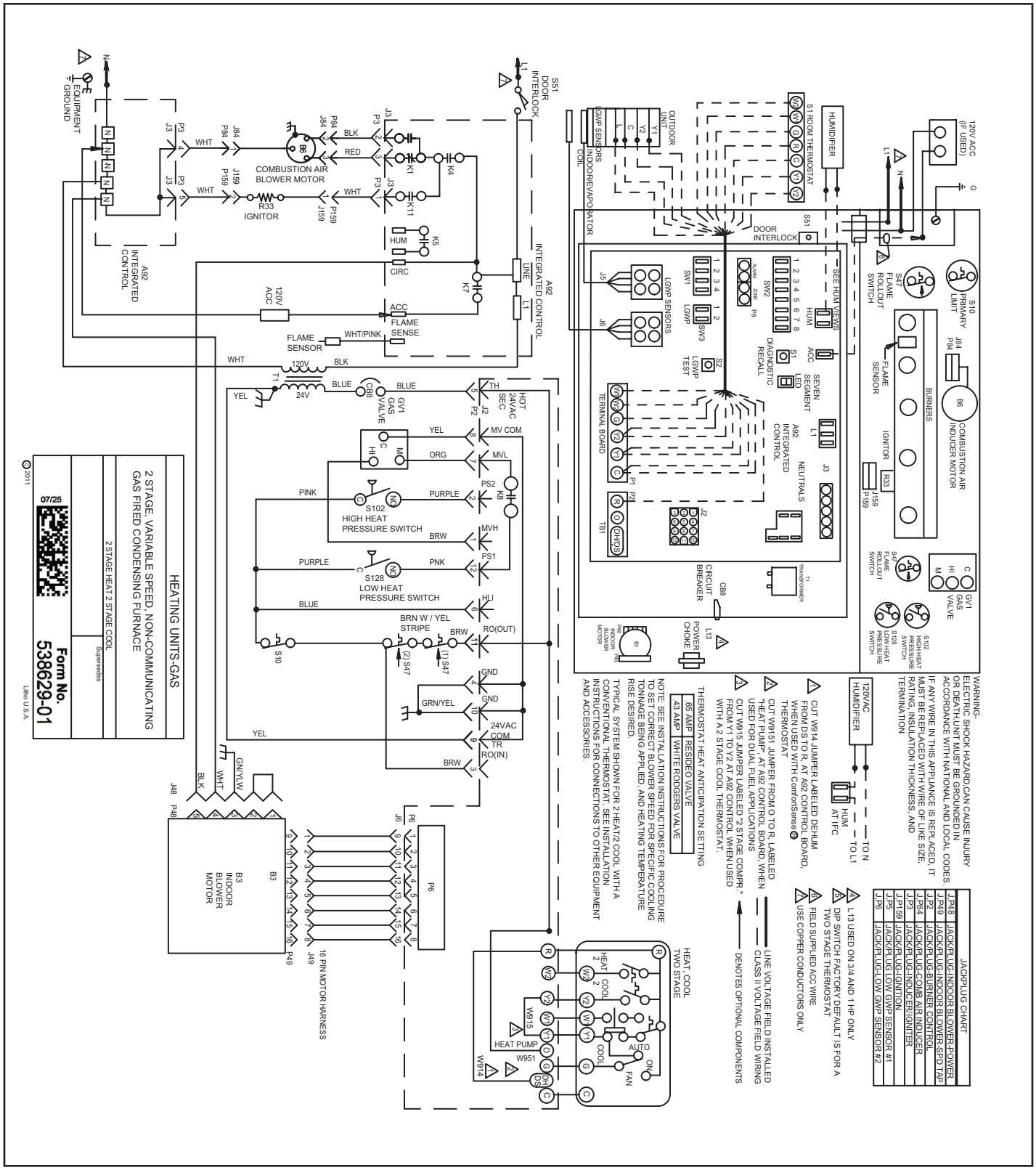
HEATING UNITS-GAS
2 STAGE, VARIABLE SPEED, NON-COMMUNICATING GAS FIRED CONDENSING FURNACE
2 STAGE HEAT 2 STAGE COOL
Supersedes
07/25
Form No.
538629-01
Litho U.S.A.
WARNING- ELECTRIC SHOCK HAZARD,CAN CAUSE INJURY OR DEATH.UNIT MUST BE GROUNDED IN ACCORDANCE WITH NATIONAL AND LOCAL CODES.
IF ANY WIRE IN THIS APPLIANCE IS REPLACED, IT MUST BE REPLACED WITH WIRE OF LIKE SIZE, RATING, INSULATION THICKNESS, AND TERMINATION
JACKPLUG CHART
J.P48 JACK/PLUG-INDOOR BLOWER-POWER
J.P49 JACK/PLUG-INDOOR BLOWER-SPD TAP
J.P2 JACK/PLUG-BURNER CONTROL
J.P84 JACK/PLUG-COMB AIR INDUCER
J.P3 JACK/PLUG-INDUCER/IGNITER
J.P159 JACK/PLUG-IGNITION
J.P5 JACK/PLUG LOW GWP SENSOR #1
J.P6 JACK/PLUG-LOW GWP SENSOR #2
L13 USED ON 3/4 AND 1 HP ONLY
DIP SWITCH FACTORY DEFAULT IS FOR A TWO STAGE THERMOSTAT
FIELD SUPPLIED ACC WIRE
USE COPPER CONDUCTORS ONLY
LINE VOLTAGE FIELD INSTALLED
CLASS II VOLTAGE FIELD WIRING
DENOTES OPTIONAL COMPONENTS
THERMOSTAT HEAT ANTICIPATION SETTING
.65 AMP RESIDEO VALVE
.43 AMP WHITE RODGERS VALVE
NOTE: SEE INSTALLATION INSTRUCTIONS FOR PROCEDURE TO SET CORRECT BLOWER SPEED FOR SPECIFIC COOLING TONNAGE BEING APPLIED, AND HEATING TEMPERATURE RISE DESIRED.
TYPICAL SYSTEM SHOWN FOR 2 HEAT/2 COOL WITH A CONVENTIONAL THERMOSTAT. SEE INSTALLATION INSTRUCTIONS FOR CONNECTIONS TO OTHER EQUIPMENT AND ACCESSORIES.
120VAC HUMIDIFIER
HUM AT IFC
TO N
TO L1
CUT W914 JUMPER LABELED DEHUM FROM DS TO R, AT A92 CONTROL BOARD, WHEN USED WITH ComfortSense® THERMOSTAT
CUT W9151 JUMPER FROM O TO R, LABELED "HEAT PUMP", AT A92 CONTROL BOARD, WHEN USED FOR DUAL FUEL APPLICATIONS
CUT W915 JUMPER LABELED "2 STAGE COMPR." FROM Y1 TO Y2 AT A92 CONTROL WHEN USED WITH A 2 STAGE COOL THERMOSTAT.
HEAT, COOL TWO STAGE
HEAT PUMP
16 PIN MOTOR HARNESS
B3 INDOOR BLOWER MOTOR
COMBUSTION AIR BLOWER MOTOR
A92 INTEGRATED CONTROL
S51 DOOR INTERLOCK
EQUIPMENT GROUND
HUMIDIFIER
S1 ROOM THERMOSTAT
OUTDOOR UNIT
INDOOR/EVAPORATOR COIL
LGWP SENSORS
DOOR INTERLOCK
SEE HUM VIEWS
SEVEN SEGMENT
DIAGNOSTIC RECALL
LGWP TEST
TERMINAL BOARD
NEUTRALS
CIRCUIT BREAKER
POWER CHOKE
S10 PRIMARY LIMIT
S47 FLAME ROLLOUT SWITCH
FLAME SENSOR
BURNERS
IGNITOR
COMBUSTION AIR INDUCER MOTOR
GV1 GAS VALVE
S102 HIGH HEAT PRESSURE SWITCH
S128 LOW HEAT PRESSURE SWITCH
HOT 24VAC SEC
GV1 GAS VALVE
S102 HIGH HEAT PRESSURE SWITCH
S128 LOW HEAT PRESSURE SWITCH
120V ACC (IF USED)
120V ACC
FLAME SENSE
FLAME SENSOR
WHT/PINK
HUM
CIRC
ACC
LINE
MV COM
MVL
MVH
PS1
PS2
HLI
RO(OUT)
GND
24VAC COM
TR
RO(IN)
GRN/YEL
GN/YLW
BLK
WHT
RED
BLUE
YEL
ORG
PINK
PURPLE
BRW
PNK
BRN W / YEL STRIPE
COMBUSTION AIR BLOWER MOTOR
R33 IGNITOR
A92 INTEGRATED CONTROL
HEAT PUMP
AUTO
ON
FAN
COOL
HEAT 2
COOL 2
DH/DS

**FIGURE 59**

## IGNITION CONTROL

### Integrated Control DIP Switch Settings Conventional Thermostat

ML296UHVK units are equipped with a two-stage, variable speed integrated control. This control manages ignition timing, heating mode fan off delays and indoor blower speeds based on selections made using the control dip switches. The control includes an internal watchguard feature which automatically resets the ignition control when it has been locked out. After one hour of continuous thermostat demand for heat, the watchguard will break and remake thermostat demand to the furnace and automatically reset the control to relight the furnace.

### Bank Of Four DIP Switches SW1 - DIP Switch Settings

**Switch 1 - Thermostat Selection -** This unit may be used with either a single-stage or two-stage thermostat. The thermostat selection is made using a DIP switch which must be properly positioned for the particular application. The DIP switch is factory-positioned for use with a two-stage thermostat. If a single-stage thermostat is to be used, the DIP switch must be repositioned.

a. Select "OFF" for two-stage heating operation controlled by a two-stage heating thermostat (factory setting);

b. Select "ON" for two-stage heating operation controlled by a single-stage heating thermostat. This setting provides a timed delay before second-stage heat is initiated.

**Switch 2 - Second Stage Heat Delay (Used with Single- Stage Thermostat Only) -** This switch is used to determine the second stage on delay when a single-stage thermostat is being used. The switch is factory-set in the OFF position, which provides a 7-minute delay before second stage heat is initiated. If the switch is toggled to the ON position, it will provide a 12-minute delay before second stage heat is initiated. This switch is only activated when the thermostat selector jumper is positioned for single stage thermostat use.

**Switches 3 and 4 - Heat Indoor Blower-Off Delay -** The blower-on delay of 30 seconds is not adjustable. The blower-off delay (time that the blower operates after the heating demand has been satisfied) can be adjusted by moving switches 3 and 4 on the integrated control. The unit is shipped from the factory with a blower-off delay of 90 seconds. The blower off delay affects comfort and is adjustable to satisfy individual applications. Adjust the blower off delay to achieve a supply air temperature between 90° and 110°F at the exact moment that the blower is de-energized. Longer off delay settings provide lower supply air temperatures; shorter settings provide higher supply air temperatures. TABLE 11 provides the blower off timings that will result from different switch settings.

**TABLE 11**

**Blower Off Delay Switch Settings**

| Blower Off Delay Seconds | Switch 3 | Switch 4 |
|---|---|---|
| 90 | Off | On |
| 120 (default) | Off | Off |
| 180 | On | Off |
| 210 | On | On |

### Bank Of Eight DIP Switches SW2

**Switches 1 and 2 - Cooling Mode Blower Speed -** The unit is shipped from the factory with the dip switches positioned for high speed (4) indoor blower motor operation during the cooling mode. TABLE 12 provides the cooling mode blower speeds that will result from different switch settings. Switches 1 and 2 set the blower cfm for second stage cool. The integrated control automatically ramps down to 70% of the second-stage cfm for first-stage cfm. Refer to tables for corresponding cfm values. See Product Specifications for more detailed blower cfm tables.

**TABLE 12**

**Cooling Mode Blower Speeds**

| Speed | Switch 1 | Switch 2 |
|---|---|---|
| Low | On | On |
| Medium Low | On | Off |
| Medium High | Off | On |
| High (factory) | Off | Off |

### Switches 3 and 4 - Blower Speed Adjustment

The unit is shipped from the factory with the dip switches positioned for NORMAL (no) adjustment. The dip switches may be positioned to adjust the blower speed by +10% or -10% to better suit the application. TABLE 13 below provides blower speed adjustments that will result from different switch settings. Refer to tables for corresponding cfm values. See Product Specifications for more detailed blower cfm tables.

**TABLE 13**

**Blower Speed Adjustment**

| Adjustment | Switch 3 | Switch 4 |
|---|---|---|
| +10 %(approx) | On | Off |
| Factory Default | Off | Off |
| -10 % (approx) | Off | On |
| Field Test (do not use) | On | On |

### Switch 5 - Cooling / Heat Pump Blower Off Delay

The unit is shipped from the factory with DIP switch positioned OFF for a 45 second delay. TABLE 14 provides the cooling mode off settings.

**TABLE 14**

**Blower Off Cooling Mode Delay Switch Setting**

| Blower Off Delay Seconds | Switch 5 |
|---|---|
| 45 (factory) | Off |
| 2 | On |

***NOTE -*** For a smooth transition of indoor blower CFM between operations in heat pump and defrost applications, it is recommended to turn switch 5 to ON position.

### Switch 6 Not Used

### Switches 7 and 8 - Heating Mode Blower Speeds

These switches are factory set to the OFF position which provides factory default heat speed. See TABLE 15 for switch setting. See TABLE 16 for allowable heating speeds

**TABLE 15**

| Heat Speed | DIP Switch 7 | DIP Switch 8 |
|---|---|---|
| Medium High | Off | Off |
| High | Off | On |
| Medium Low | On | Off |
| Low | On | On |

**TABLE 16**

| Allowable Heating Speeds | | | | | |
|---|---|---|---|---|---|
| ML296UHVK Model | Speed Adjust | Low | Medium | Medium/High | High |
| 045XV36B | +10% | Allowed | Allowed | Allowed | Allowed |
| | Norm | | | Factory Setting | |
| | -10% | | | Allowed | |
| 070XV36B | +10% | | | | Not Allowed |
| | Norm | | | Factory Setting | |
| | -10% | | | Allowed | |
| 090XV48C | +10% | | | | |
| | Norm | | | Factory Setting | |
| | -10% | | | Allowed | |
| 110XV60C | +10% | | | | Allowed |
| | Norm | | | Factory Setting | |
| | -10% | | | Allowed | |

## Two Stage, Variable Speed, Non-Communicating
## 107629-01

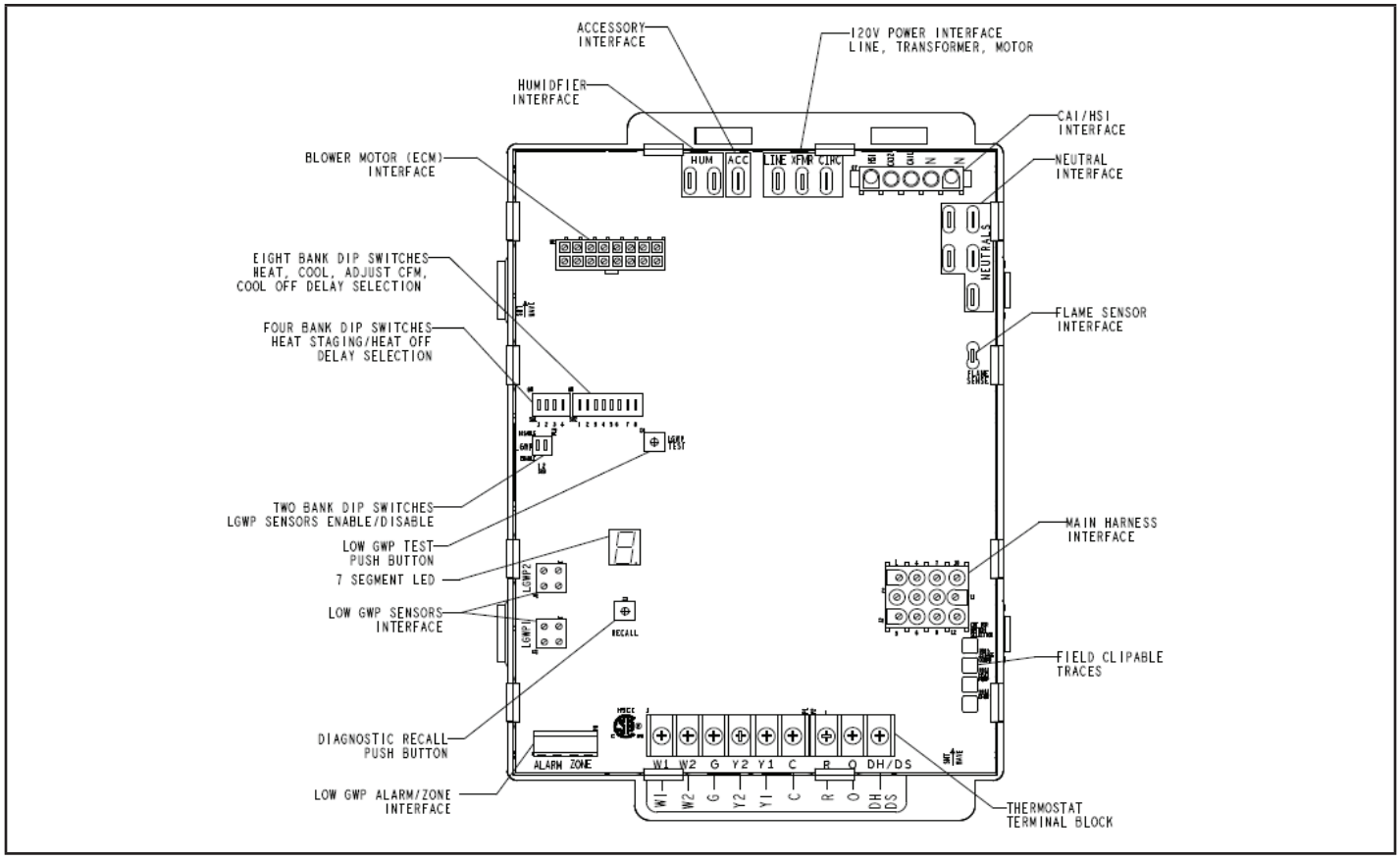


**FIGURE 60**

### TABLE 17

| 1/4” QUICK CONNECT TERMINALS | |
|---|---|
| LINE | 120VAC INPUT TO THE CONTROL |
| XFMR | 120VAC OUTPUT TO THE TRANSFORMER |
| CIRC | 120VAC OUTPUT TO THE INDOOR BLOWER BLOWER |
| HUM | UNPOWERED NORMALLY OPEN (DRY) CONTACTS |
| ACC | 120VAC OUTPUT TO THE OPTIONAL ACCESSORY |
| NEUTRALS | 120VAC NEUTRALS (5) |
| **3/16” QUICK CONNECT TERMINALS** | |
| FLAME SENSE | FLAME SENSESOR INTERFACE |

### TABLE 18

| THERMOSTAT INPUT TERMINALS | |
|---|---|
| W1 | LOW STAGE HEAT |
| W2 | HIGH STAGE HEAT |
| G | FAN |
| Y1 | LOW STAGE COOL (when W915 is clipped) |
| Y2 | HIGH STAGE COOL (when W915 is clipped) |
| C | THERMOSTAT COMMON / GROUND |
| R | 24VAC POWER TO THE THERMOSTAT |
| O | HEAT PUMP REVERSING VALVE (when W951 is clipped) |
| DH / DS | DEHUM / HARMONY(when W914 is clipped) |

### TABLE 19

| LOW GWP INTERFACE | |
|---|---|
| LGWP1 | LOW GWP SENSOR #1 INTERFACE |
| LGWP2 | LOW GWP SENSOR # 2 INTERFACE |
| ALARM | INTERFACE TO LOW GWP LEAK AUDIBLE ALARM (DRY CONTACT) |
| ZONE | INTERFACE TO ZONING CONTROL FOR LOW GWP APPLICATIONS |
| LGWP TEST | PUSH BUTTON TO TEST LOW GWP FUNCTIONALITY |

**Diagnostic LED (FIGURE 60)**

The seven-segment diagnostic LED displays operating status, error codes and other information.

**Diagnostic Push Button (FIGURE 60)**

The diagnostic push button is located adjacent to the seven-segment diagnostic LED. This button is used to enable the Error Code Recall “E” mode and the Flame Signal “F” mode. Press the button and hold it to cycle through a menu of options. Every five seconds a new menu item will be displayed. When the button is released, the displayed item will be selected. Once all items in the menu have been displayed, the menu resumes from the beginning until the button is released.

**Error Code Recall Mode**

Select ”E” from the menu to access the most recent 10 error codes. Select “c” from the Error Code Recall menu to clear all error codes. Button must be pressed a second time while “c” is flashing to confirm command to delete codes. Press the button until a solid “≡” is displayed to exit the Error Code Recall mode.

**Flame Signal Mode**

Select ”F” from the menu to access the flame signal mode. The integrated control will display the flame current on seven-segment LED in in micro amps (uA). Flame signal mode is exited after any of the following:

- Power is reset
- Pressing and holding push button until 3 horizontal
- lines “≡” are displayed
- 10 minutes after entering the flame sense mode

**Ignition Control Diagnostic Codes**

| Code | Diagnostic Codes/Status of Equipment | Action Required to Clear and Recover |
|---|---|---|
| . | Idle mode (Decimal blinks at 1 Hertz -- 0.5 second ON, 0.5 second OFF). | |
| A | Continuous Fan Mode Only | |
| C | Cooling stage (1 second ON, 0.5 second OFF) / 1 or 2 displayed / Pause / cfm setting displayed / Pause / Repeat codes). | |
| d | Dehumidification mode (1 second ON) / 1 second OFF) / cfm setting displayed / Pause / Repeat Codes). | |
| h | Heat pump stage (1 second ON, 0.5 second OFF) / % of input rate displayed / Pause / cfm setting / Pause / Repeat codes. | |
| H | Gas Heat Stage (1 second ON, 0.5 second OFF) / 1 or 2 displayed / Pause / cfm setting displayed / Pause / Repeat codes. Blinking during ignition. | |
| dF | Defrost mode. | |
| E000 | No error in memory | |
| E110 | Low line voltage. | Line Voltage Low (Voltage lower than nameplate rating). Check power line voltage and correct. Alarm clears 5 seconds after fault recovered. |
| E111 | Low line voltage. | Reverse line power voltage wiring. System resumes normal operation 5 seconds after fault recovered. |
| E112 | Ground not detected | System shuts down. Provide proper earth ground. System resumes normal operation 5 seconds after fault recovered. |
| E113 | High line voltage. | Line Voltage High (Voltage higher than nameplate rating). Provide power voltage within proper range. System resumes normal operation 5 seconds after fault recovered. |
| E117 | Poor ground detected (Warning only) | Provide proper grounding for unit. Check for proper earth ground to the system. Warning only will clear 30 seconds after fault recovered. |
| E125 | Control failed self-check, internal error, failed hardware. Will restart if error recovers. Integrated control not communicating. Covers hardware errors (flame sense circuit faults, pin shorts, etc.). | Hardware problem on the control. Cycle power on control. Replace if problem prevents service and is persistent. Critical alert. Cleared 300 seconds after fault recovered. |

## Ignition Control Diagnostic Codes Continued

| Code | Diagnostic Codes/Status of Equipment | Action Required to Clear and Recover |
|---|---|---|
| E150 | A2L Refrigerant leak alarm | This may indicate the presence of a leak at or in the indoor unit coil of the equipment, that will need to be repaired for proper and safe operation. Additionally, it may indicate that proper refrigerant charge will need to be verified. The fault cannot be cleared while the refrigerant detection system sensor is reporting the presence of a leak. |
| E151 | Refrigerant Leak Detector Sensor #1 fault | The refrigerant detection sensor #1 in the unit is reporting an issue that prevents it from functioning properly and replacement of the sensor may be necessary. This fault clears when the sensor no longer reports the presence of a fault condition |
| E152 | Refrigerant Leak Detector #2 Fault | The refrigerant detection sensor #1 in the unit is reporting an issue that prevents it from functioning properly and replacement of the sensor may be necessary. This fault clears when the sensor no longer reports the presence of a fault condition |
| E154 | Refrigerant Leak Detector #1 Communication lost or invalid sensor dip switch configuration (Disable/Enable)) | There may be an issue with the wiring harness connecting the sensor #1 to the furnace control board, either with the wiring itself or with the connector. Check the wiring and connector for damage or improper connectivity. Check the sensor for damage or obstruction on the harness plug. This fault clears when communicati9ons with the senor has been reestablished, but blower latches for a minimum 5 minutes. Retest of the presence of fault can be effected by pressing the LOW GWP test button on the furnace unit control board.<br>This may also indicate incorrect LOW GWP dip switch settings. See installation instructions |
| E155 | Refrigerant Leak Detector #2 Communication lost | There may be an issue with the wiring harness connecting the sensor #1 to the furnace control board, either with the wiring itself or with the connector. Check the wiring and connector for damage or improper connectivity. Check the sensor for damage or obstruction on the harness plug. This fault clears when communicati9ons with the senor has been reestablished, but blower latches for a minimum 5 minutes. Retest of the presence of fault can be effected by pressing the LOW GWP test button on the furnace unit control board. |
| E160 | Refrigerant Leak Detector Sensor #1 type incorrect | The sensor #1 is of a type not suitable for use in the application. Replace the sensor with a Lennox approved replacement part. This fault clears when a sensor suitable for the application is detected by the furnace control board, but blower will latch for a minimum of 5 minutes. Retest of the presence of the fault can be effected by pressing the LOW GWP test button on the furnace unit control board |
| E161 | Refrigerant Leak Detector Sensor #2 type incorrect | The sensor #2 is of a type not suitable for use in the application. Replace the sensor with a Lennox approved replacement part. This fault clears when a sensor suitable for the application is detected by the furnace control board, but blower will latch for a minimum of 5 minutes. Retest of the presence of the fault can be effected by pressing the LOW GWP test button on the furnace unit control board |
| E163 | Furnace Control Board Failure | There is an issue with the furnace control board, preventing the furnace from operating properly. This may require the replacement of the indoor unit control board. This fault clears when the furnace controller operates normally |

| Ignition Control Diagnostic Codes Continued | | |
|---|---|---|
| **Code** | **Diagnostic Codes/Status of Equipment** | **Action Required to Clear and Recover** |
| E164 | Low GWP Test | Low GWP Test mode activates by manually engaging Low GWP test button. Normal operations resumes and codes clear automatically after 1-minute |
| E200 | Hard lockout - Rollout circuit open or previously open. | Correct cause of rollout trip, or replace flame rollout switch. Test furnace operation. Cleared after fault recovered. |
| E204 | Gas valve mis-wired. | Check gas valve operation and wiring. Clears when repaired. |
| E205 | Gas valve control relay contact shorted. | Check wiring on control and gas valve. If wiring is correct, replace control. |
| E207 | Hot surface ignitor sensed open | Measure resistance of hot surface ignitor. Replace if open or not within specified range found in IOM. Resumes normal operation after fault is cleared. |
| E223 | Low pressure switch failed open. | Check pressure (inches w.c.) of low pressure switch closing on heat call. Measure operating pressure (inches w.c.). Inspect vent and combustion air inducer for correct operation and restriction. Resumes normal operation after fault is cleared |
| E224 | Low pressure switch failed closed | Check operation of low pressure switch to see if it is stuck closed on heat call longer than 150 seconds. Measure operating pressure (inches w.c.). Inspect vent and combustion air inducer for correct operation and restriction. Resumes normal operation after fault is cleared. |
| E225 | High pressure switch failed open. | Check pressure (inches w.c.) of high pressure switch closing on heat call. Measure operating pressure (inches w.c.). Inspect vent and combustion air inducer for correct operation and restriction. Resumes normal operation after fault is cleared. |
| E226 | High pressure switch failed closed | Check operation of high pressure switch closing on heat call. Measure operating pressure (inches w.c.). Inspect vent and combustion air inducer for correct operation and restriction. Resumes normal operation after fault is cleared. |
| E227 | Low pressure switch open during trial for ignition or run mode. | Check pressure (inches w.c.) of low pressure switch closing on heat call. Measure operating pressure (inches w.c.). Inspect vent and combustion air inducer for correct operation and restriction. Resumes normal operation after fault is cleared. |
| E229 | Ignition on high fire | IFC switched to high fire ignition because low fire pressure switch did not close in allowed time. No action is needed. |
| E240 | Low flame current - Run mode. | Check micro-amperes of flame sensor using control diagnostics or field-installed mode. Clean or replace sensor. Measure voltage of neutral to ground to ensure good unit ground. Alert clears after current heat call has been completed. See TABLE 27 for flame signal. |

## Ignition Control Diagnostic Codes Continued

| Code | Diagnostic Codes/Status of Equipment | Action Required to Clear and Recover |
|---|---|---|
| E241 | Flame sensed out of sequence - Flame still present. | Shut off gas. Check for gas valve leak. Replace, if necessary. Alert clears when fault is recovered. |
| E250 | Limit switch circuit open. | Check for proper firing rate on furnace. Ensure there is no blockage in heater. Check for proper air flow. If limit not closed within 3 minutes, unit will go into 1-hour soft lockout. Resumes normal operation after fault is cleared. |
| E270 | Soft lockout - Exceeded maximum number of retries. No flame current sensed. | Check for proper gas flow. Ensure that ignitor is lighting burner. Check flame sensor current. Clears when heat call finishes successfully. |
| E271 | Soft lockout - Exceeded maximum number of retries. Last retry failed due to the pressure switch opening. | Check pressure (inches w.c.) of low pressure switch closing on heat call. Measure operating pressure (inches w.c.). Inspect vent and combustion air inducer for correct operation and restriction. Clears when heat call finishes successfully. |
| E272 | Soft lockout - Exceeded maximum number of recycles. Last recycle due to the pressure switch opening. | Check operation of low pressure switch to see if it is stuck closed on heat call. Check pressure (inches w.c.) of high pressure switch closing on heat call. Measure operating pressure (inches w.c.). Inspect vent and combustion air inducer for correct operation and restriction. Clears when heat call finishes successfully. |
| E273 | Soft lockout - Exceeded maximum number of recycles. Last recycle due to flame failure. | Check micro-amperes of flame sensor using control diagnostics or field-installed mode. Clean or replace sensor. Measure voltage of neutral to ground to ensure good unit ground. Clears when heat call finishes successfully. |
| E274 | Soft lockout - Exceeded maximum number of recycles. Last recycle failed due to the limit circuit opening or limit remained open longer than 3 minutes | Shut down system. 1-hour soft lockout. Check firing rate and air flow. Check for blockage. Clears when heat call finishes successfully. |
| E275 | Soft lockout - Flame sensed out of sequence. Flame signal is gone. | Shut off gas. Check for gas valve leak. 1-hour soft lockout. Clears when flame has been proven stable. |
| E292 | Indoor blower motor unable to start due to obstructed wheel, seized bearings. | Replace motor or wheel if assembly does not operate or meet performance standards. 1 hour soft lock- out clears after circulator successfully starts. |
| E311 | Heat rate reduced to match indoor blower air flow. | Warning Only. Furnace blower in cutback mode due to restricted airflow. Reduce firing rate every 60 seconds to match available CFM. Check filter and duct sytem. To clear, replace filter if needed or repair/add duct. 2 stage controls will reduce firing rate to 1st stage. Clears when heat call finishes successfully |
| E390 | Low GWP Relay Stuck | Thuis induicates as issue with the low GWP relay in the furnace control. This may require the replacement of the unit control board. This fault clears when the relay operates normally. |

## On-Board Links

**⚠ WARNING**

Carefully review all configuration information provided. Failure to properly set DIP switches, jumpers and on-board links can result in improper operation!

### On-Board Link W914 Dehum or Harmony (R to DS)

On-Board Link W914 Dehum or Harmony (R to DS) On-board link W914, is a clippable connection between terminals R and DS on the integrated control. W914 must be cut when the furnace is installed with either the Harmony III zone control or a thermostat which features humidity control. See active Dehumidification section for more detail.If the link is left intact the PMW signal from the Harmony III control will be blocked and also lead to control damage.

### On-Board Link W951 Heat Pump (R to O)

On-board link W951 is a clippable connection between terminals R and O on the integrated control. W951 must be cut when the furnace is installed in applications which include a heat pump unit and a thermostat which features dual fuel use. If the link is left intact, terminal “O” will remain energized eliminating the HEAT MODE in the heat pump.

### On-Board Link W915 2 Stage Compr (Y1 to Y2)

On-board link W915 is a clippable connection between terminals Y1 and Y2 on the integrated control. W915 must be cut if two-stage cooling will be used. If the Y1 to Y2 link is not cut the outdoor unit will operate in second-stage cooling only.

### Diagnostic Push Button

The diagnostic push button is located adjacent to the seven-segment diagnostic LED. This button is used to enable the Error Code Recall “E” mode and the Flame Signal “F” mode. Press the button and hold it to cycle through a menu of options. Every five seconds a new menu item will be displayed. When the button is released, the displayed item will be selected. Once all items in the menu have been displayed, the menu resumes from the beginning until the button is released.

### Humidifier

An unpowered, normally open (dry) set of contacts with a 1/4” spade terminal “HUM” are provided for humidifier connections and may be connected to 24V or 120V. Any humidifier rated up to one amp can be connected to these terminals. In 120V humidifier applications the neutral leg of the circuit can be connected to one of the provided neutral terminals. This terminal is energized in the heating mode.

### Accessory Terminals

One line voltage “ACC” 1/4” spade terminal is provided on the furnace integrated control. Refer to FIGURE 60 for integrated control configuration. This terminal is energized when the indoor blower is operating.

Any accessory rated up to one amp can be connected to this terminal with the neutral leg of the circuit being connected to one of the provided neutral terminals. If an accessory rated at greater than one amp is connected to this terminal, it is necessary to use an external relay.

### Variable Speed Features

This furnace is equipped with a variable speed circulation air blower motor that will deliver a constant airflow within a wide range of external static pressures. Other features of this variable speed motor include:

### Soft Start

The variable speed motor will slowly ramp up to normal operating speed. This minimizes noise and increases comfort by eliminating the initial blasts of air encountered with standard motors.

### Soft Stop

At the end of a cooling or heating cycle, the variable speed motor will slowly ramp down after a short blower “off” delay. If continuous blower operation has been selected, the variable speed motor will slowly ramp down until it reaches the airflow for that mode.

### Passive and Active Dehumidification

Both the passive and active dehumidification methods described below can be utilized on the same furnace.

### Passive Dehumidification

For situations where humidity control is a problem, a dehumidification feature has been built into the variable speed motor. At the start of each cooling cycle, the variable speed motor will run at 82% of the rated airflow for 7.5 minutes. After 7.5 minutes has elapsed, the motor will increase to 100% of the rated airflow.

### Active Dehumidification

To achieve additional dehumidification, clip the R to DH/DS on the integrated ignition/ blower control board and connect a humidity control that opens on humidity rise to the DEHUM and R terminals. The DEHUM terminal on the control board must be connected to the normally closed contact of the humidity control so that the board senses an open circuit on high humidity. In this setup, the variable speed motor will operate at a 30% reduction in the normal cooling airflow rate when there is a call for dehumidification.

### *Continuous Blower Operation*

The comfort level of the living space can be enhanced when using this feature by allowing continuous circulation of air between calls for cooling or heating. The circulation of air occurs at the full cooling airflow rate.

To engage the continuous blower operation, place the fan switch on the thermostat into the ON position. A call for fan from the thermostat closes R to G on the ignition control board. The control waits for a 1 second thermostat delay before responding to the call for fan by ramping the circulating blower at to 38% of the cooling speed. When the call for continuous fan is satisfied, the control immediately ramps down the circulating blower.

## Field Wiring Applications With Conventional Thermostat (*see Ignition Control section for DIP switch settings)*

| Thermostat | DIP Switch Settings and On-Board Links | | Wiring Connections |
|---|---|---|---|
| | DIP Switch 1 Thermostat Heating Stages | On Board Links Must Be Cut To Select System Options | |
| 1 Heat / 1 Cool<br>*NOTE - Use DIP switch 2 to set second-stage heat ON delay. OFF-7 minutes. ON-12 minutes.*<br>(L40 T-stat) | ON | DO NOT CUT ANY ON-BOARD LINKS<br> 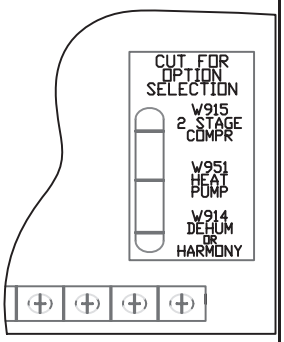 | 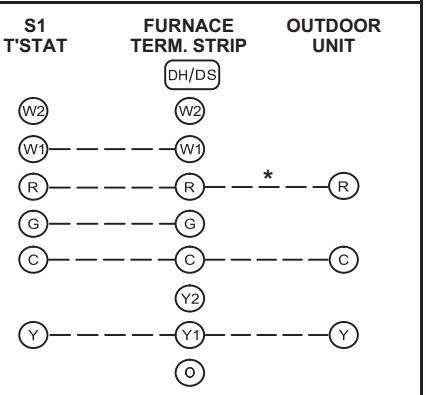 |
| 1 Heat / 2 Cool<br>*NOTE - Use DIP switch 2 to set second-stage heat ON delay. OFF-7 minutes. ON-12 minutes.*<br>(M30 T-stat) | ON | CUT ON-BOARD LINK W915 2 STAGE COMPR<br> 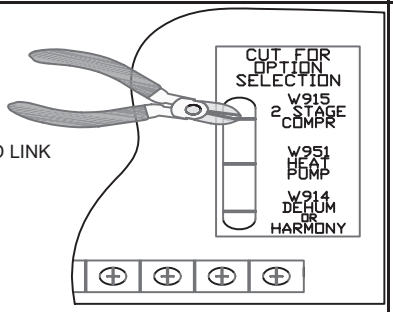 | 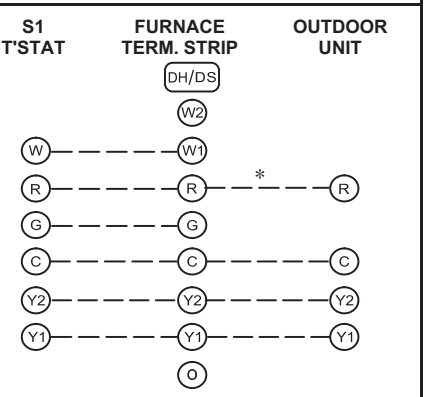 |
| 1 Heat / 2 Cool with t'stat with humidity control<br>*NOTE - Use DIP switch 2 to set second-stage heat ON delay. OFF-7 minutes. ON-12 minutes.*<br>(M30 T-stat) | ON | CUT ON-BOARD LINK W915 2 STAGE COMPR<br>CUT ON-BOARD LINK W914 DEHUM OR HARMONY<br> 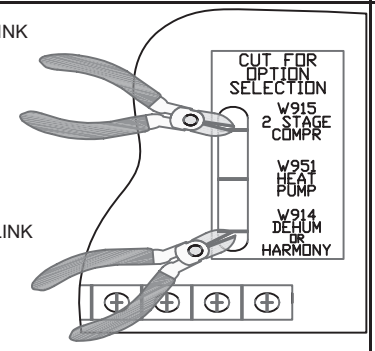 | 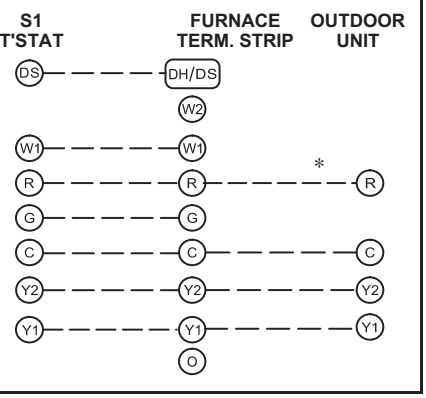 |

** Not required on all units.*

## Field Wiring Applications With Conventional Thermostat (*see Ignition Control section for DIP switch settings)*

| Thermostat | DIP Switch Settings and On-Board Links | | Wiring Connections |
|---|---|---|---|
| | DIP Switch 1 Thermostat Heating Stages | On Board Links Must Be Cut To Select System Options | |
| 2 Heat / 2 Cool (M30 T-stat) | OFF | 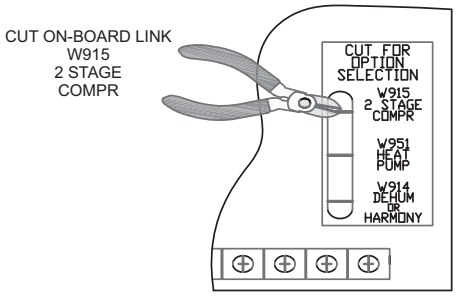 | 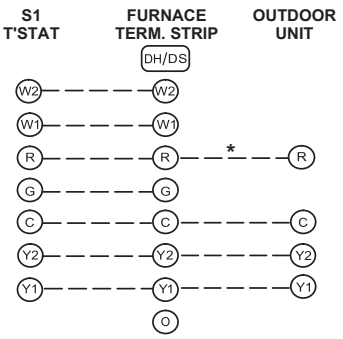 |
| 2 Heat / 2 Cool with t'stat with humidity control (M30 T-stat) | OFF | 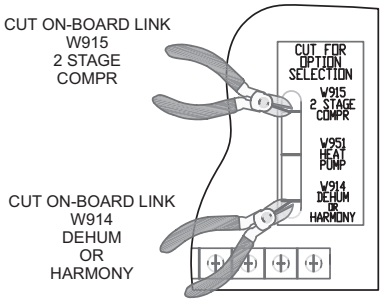 | 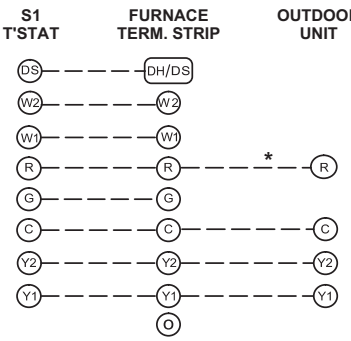 |
| 2 Heat / 1 Cool with t'stat with humidity control (M30 T-stat) | OFF | 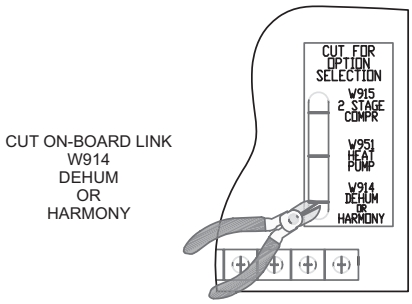 | 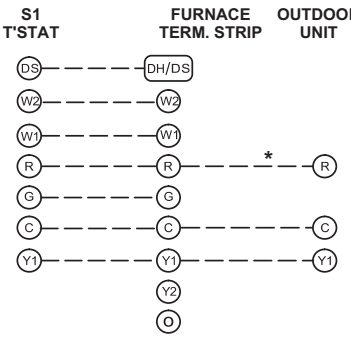 |
| 2 Heat / 1 Cool (M30 T-stat) | OFF | 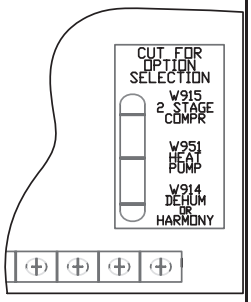 | 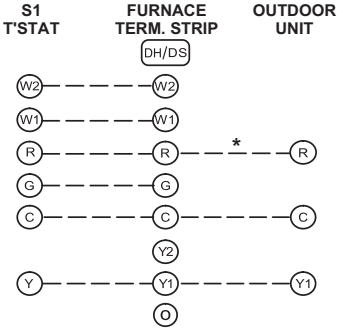 |

** Not required on all units.*

## Field Wiring Applications With Conventional Thermostat (*see Ignition Control section for DIP switch settings)*

| Thermostat | DIP Switch Settings and On-Board Links | | Wiring Connections |
|---|---|---|---|
| | DIP Switch 1 Thermostat Heating Stages | On Board Links Must Be Cut To Select System Options | |
| Dual Fuel Single Stage Heat Pump<br><br>(M30 T-stat) thermostat w/ dual fuel capa-bilities<br>Capable of 2 stage gas heat control | OFF | 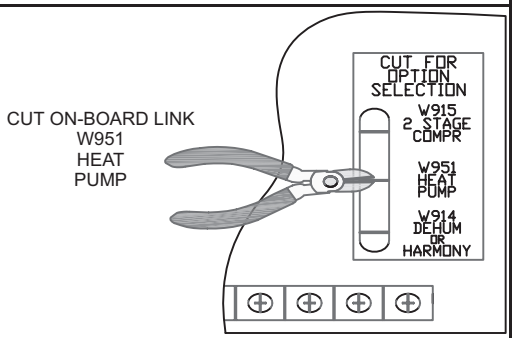 | 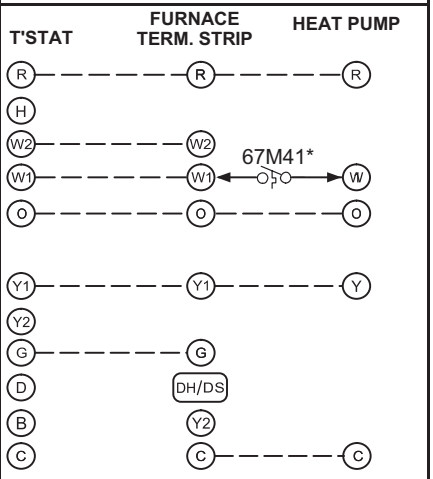 |
| Dual Fuel Two Stage Heat Pump<br><br>(M30 T-stat) thermostat w/ dual fuel capa-bilities<br>Capable of 2 stage gas heat control | OFF | 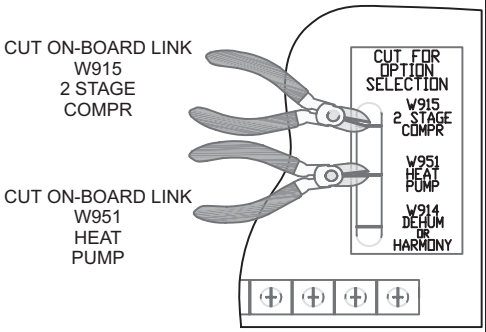 | 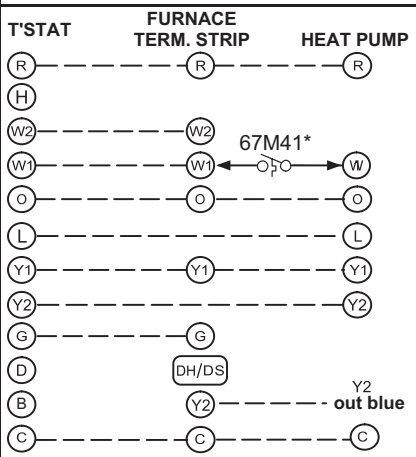 |

** Connect W1 to W1 ONLY if using defrost tempering kit 67M41*

*NOTE - **Do NOT** make a wire connection between the room thermostat L terminal and the L terminal of the furnace integrated control.*

## Field Wiring Applications With Conventional Thermostat (*see Ignition Control section for DIP switch settings)*

| Thermostat | DIP Switch Settings and On-Board Links | | Wiring Connections |
|---|---|---|---|
| | DIP Switch 1 Thermostat Heating Stages | On Board Links Must Be Cut To Select System Options | |
| Dual Fuel Single Stage Heat Pump<br><br>(M30 T-stat) thermostat w/ dual fuel capabilities<br>Capable of 2 stage gas heat control w/dehumidification control | OFF | 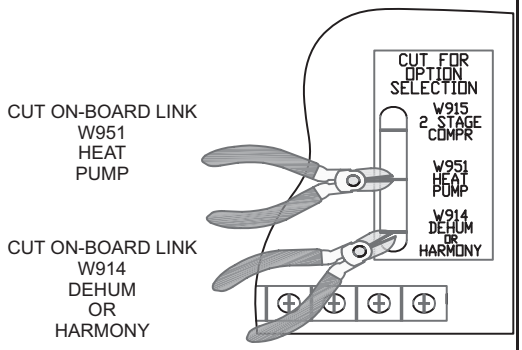 | 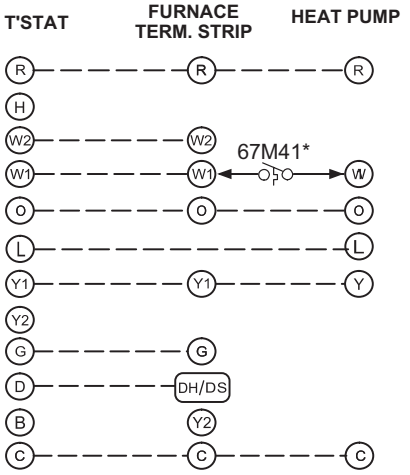 |
| Dual Fuel Two Stage Heat Pump<br><br>(M30 T-stat) thermostat w/ dual fuel capabilities<br>Capable of 2 stage gas heat control w/dehumidification | OFF | 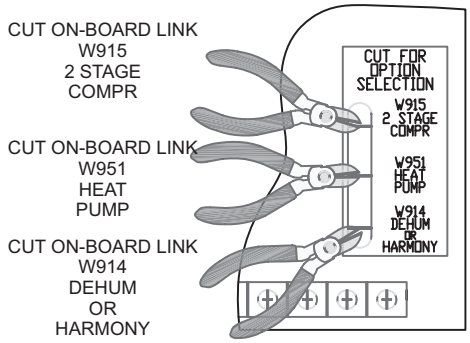 | 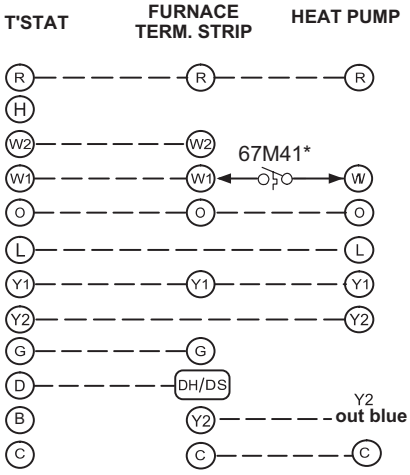 |

** Connect W1 to W1 ONLY if using defrost tempering kit 67M41*

*NOTE - **Do NOT** make a wire connection between the room thermostat L terminal and the L terminal of the furnace integrated control.*

## Low GWP Application

**⚠ WARNING**

For use with Lennox approved evaporator coil and LGWP sensors only. Use original manufacturer recommended LGWP sensors if using non Lennox approved evaporator coil.

**CONNECTING THE FURNACE CONTROL BOARD SENSOR.**

**See FIGURE 63 and follow steps below:**

1 - Route sensor wire #1 through provided grommet. Form a drip loop below the control board on upflow installations to prevent condensate dripping on the control board.

2 - Avoid sharp edges when routing sensor wire during installation.

3 - Sensor wire must not block view of 7 segment LED .

Ensure the cable is properly seated into the SENSOR 1 plug (LGWP1). The Molex plug clip should lock into the Molex connection point for a secured connection, as shown below in FIGURE 61. Verify the connection is free of dust, debris, and moisture.

*NOTE -In confined space applications, connect the second sensor to the SENSOR 2 plug (LGWP2). Refer to evaporator coil installation instructions for more detail.*

**Two Stage Variable Speed Control**

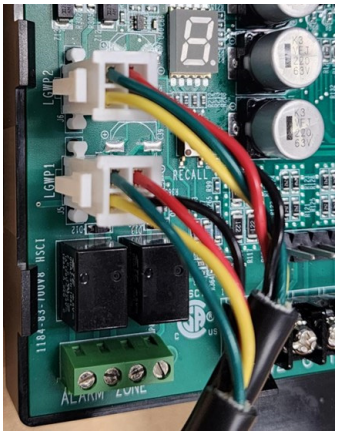


**FIGURE 61**

**LOW GWP DIP SWITCH SETTINGS**

Adjust the DIP switch settings to the sensor configuration. Failure to do so will cause faults on power-up. See FIGURE 62 and .

**FIGURE 62**

**TABLE 20**

DIP Switch Settings

| Configuration | LGWP1 | LGWP2 |
|---|---|---|
| One (1) sensor, connected to SENSOR 1 plug | Enable | Disable |
| Two (2) sensors, connected to SENSOR 1 plug and SENSOR 2 plug | Enable | Enable |
| No sensor R410A or heat only applications | Disable | Disable |
| Invalid Configuration | Disable | Enable |

In single sensor configurations, the sensor must be connected to the SENSOR 1 plug (LGWP1). Configurations other than the ones shown in will cause a servicing fault.

Each DIP switch corresponds to a sensor position (i.e., DIP switch 1 to sensor 1; DIP switch 2 to sensor 2). The default factory switch positions are set to ENABLED.

The furnace control board software reads the ENABLE position as an active sensor. A sensor should be present for the corresponding sensor connector. Setting the DIP switch to DISABLE disables the sensor position.

**SECONDARY SENSOR REQUIREMENTS**

**Additional Line Sets**

If additional refrigerant line joints are present outside of the line set sleeve and a secondary refrigerant detection sensor is required, its installation must comply with the requirement listed in Refrigeration Detection Sensor kit (27V53). See FIGURE 63 for routing the secondary sensor cable through the furnace cabinet.

**Non-Low GWP Applications**

**⚠ WARNING**

**For Furnace only applications or Furnace replacement in a Non-Low GWP applications, the LOW GWP sensors should be disabled, otherwise the blower will operate continuously. To do this, the Low GWP Dip switches setting for both – Sensor 1 and the Sensor 2 must be moved to the DISABLE position.**

## FURNACE CONTROL BOARD LOW GWP MODES OF OPERATION

The modes of operation for the furnace control board are Initializing, Normal, Leak Detected, and Fault.

***Initializing***

The furnace control board is establishing connection with the refrigerant detection sensor and is completing an initial five-minute purge sequence.

***Normal***

The HVAC system is functioning normally. The furnace control board has not detected a refrigerant leak.

***Leak Detected***

When the furnace control board detects a refrigerant leak:

1. The furnace control board shuts off the (R) input (24VAC power) to the thermostat, which de-energizes the outdoor unit compressor and heat sources, such as gas and/or electric strip heat. No heating or cooling demands will be met.
2. The furnace control board activates the blower (high speed). The blower purges refrigerant from the cabinet, plenum, and ductwork.
3. After the furnace control board determines the refrigerant levels are below the safety threshold, the blower will continue to operate for the remainder of the seven (7) -minute cycle.
4. After the blower sequence is complete, the HVAC system resumes normal operation.

***NOTE -*** *The HVAC system may not maintain a cooling or heating set point if a significant leak exists. Any refrigerant leaks that remain unaddressed for an extended time may cause the HVAC system to shut down on a low refrigerant pressure limit condition.*

***Fault***

When a Low GWP fault is detected by the furnace control board, the indoor unit blower engages and remains engaged at a constant air flow output until the fault is cleared.

***NOTE -*** *See "IGNITION CONTROL DIAGNOSTIC CODES" on page 44 for Low GWP diagnostic error codes*

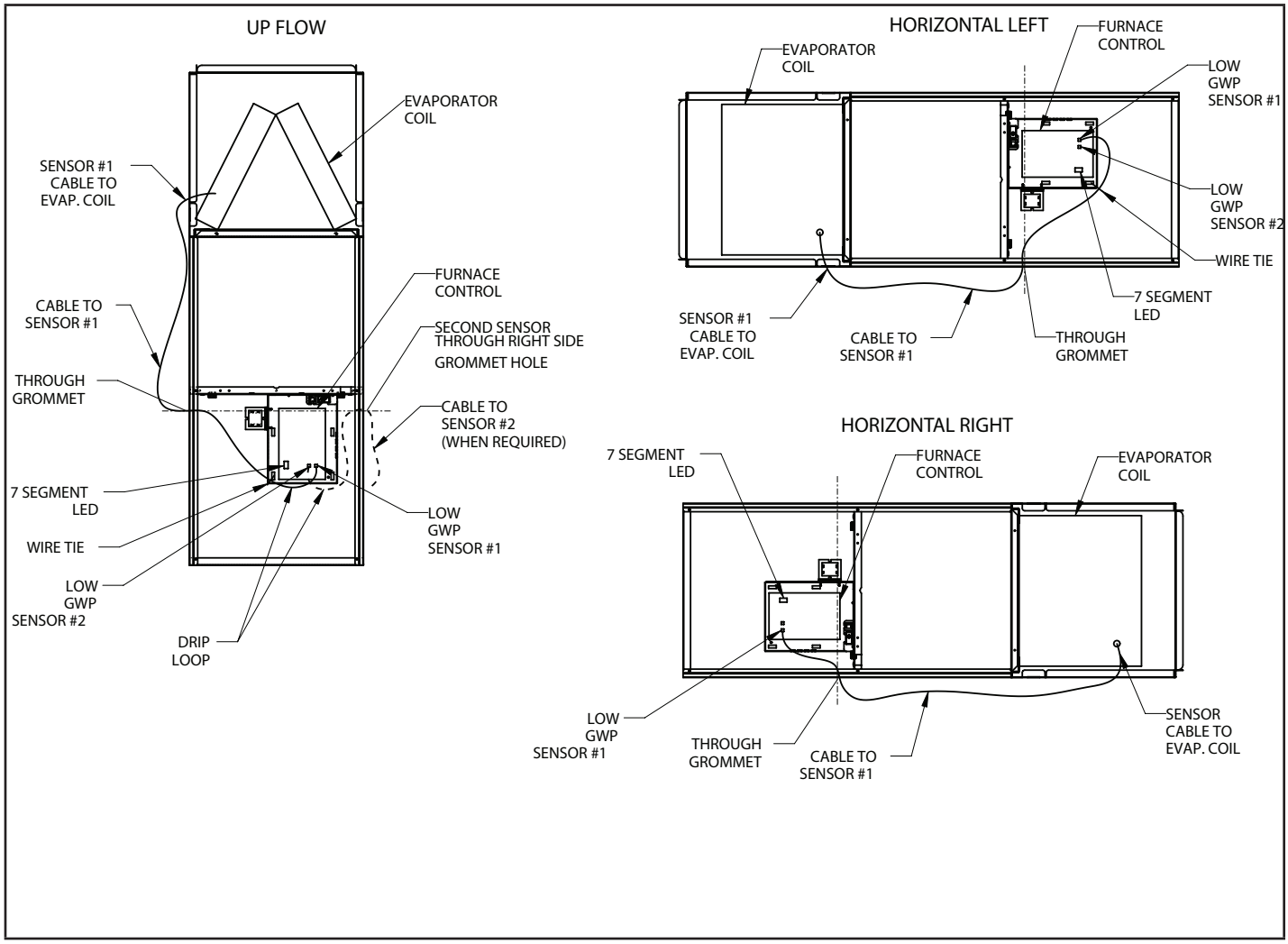


**FIGURE 63**

## LGWP TEST BUTTON FUNCTIONALITY

The furnace control board is equipped with a Test/Reset push button. The Test button can be used to perform several functions, depending on the mode of operation of the furnace control board.

TABLE 21 lists the functions of the Test button during each mode of operation.

**TABLE 21**

**LGWP Test Button Function**

| Mode of Operation | Press the Test Button to: |
|---|---|
| Normal | Trigger a leak detection response.<br>Verify all equipment is wired correctly into the furnace blower control board (after installation). |
| Leak Detected | Reset the furnace control board to a normal mode of operation after a previous leak has been detected and purged from the HVAC system |
| Fault | Reset the furnace control board after troubleshooting and resolving a fault condition. If the fault is not resolved, the furnace control board will enter the Fault mode again. |

### *LGWP Test Button - Additional Functions*

TABLE 22 lists the additional functions of the Test Button while the furnace control board is functioning within the states of Initializing, Monitoring, Leak Detection, Servicing and Fault.

**TABLE 22**

**Additional Button Functions**

| State | Press | Action |
|---|---|---|
| Initializing | Short | Skips remaining pre-purge after sensors are recognized by the furnace control board |
| Initializing | Long | Reset control |
| Monitoring | Short | Clear purge-counter if prior mitigation has occurred; Test mitigation |
| Monitoring | Long | Reset control |
| Mitigating | Short | If testing mitigation, end test |
| Servicing | Short | Reevaluate fault condition - if cleared return to monitoring, otherwise update indicator |
| Servicing | Long | Reset control |
| Fault | Short | Reevaluate fault condition - if cleared return to monitoring, otherwise update indicator |
| Fault | Long | Reset control |

### *External Alarm*

(*For applications with external alarms wired directly to the furnace control board*)

The furnace control board triggers the external alarm system when it enters Leak Detected mode. For alarm notifications, the furnace control board provides a dry relay contact that is rated 3A at 30 VAC/DC.

## THERMOSTAT COMPATIBILITY

Thermostats that preserve memory settings are compatible with the furnace control board. Examples include:

- Battery-powered thermostats
- Analog Thermostat
- Late-model programmable thermostats

***NOTE -*** *Early-generation digital and programmable thermostats may not retain the operation mode and temperature setpoints after a power outage.*

The following scenarios are likely to occur when home occupants are not available to adjust the thermostat setpoints as the system is recovering from leak detection and resuming normal operation:

- Heating could be lost during a cold night
- Cooling could be lost during a hot day
- The thermostat could reset to an incorrect temperature setpoint

## START UP PROCEDURE

The furnace control board is equipped with a LGWP Test/Reset button, see Test Button Functionality. After the furnace control board has been mounted and wired, restore power to the HVAC system. The system will then run through a purge sequence for five minutes. After the purge sequence is complete, proceed to testing cooling demand and heating demand.

### *Cooling Demand*

1. Prompt a cooling demand at the thermostat.
2. Press the LGWP Test button on the furnace control board.

   The system then executes a leak detection response.
3. Observe the following sequence:
   a. The LED indicator for leak detection. *See page 44 for diagnostic error codes*.
   b. The blower powers up.
   c. The outdoor compressor powers down.
4. Press the LGWP Test button to terminate the simulated Leak Detected mode upon test completion
5. ***Heating Demand***

1. Prompt a heating demand at the thermostat.
2. Observe the following sequence:
   a. The LED indicator for leak detection. *See page 44 for diagnostic codes*.
   b. The blower powers up.
   c. The gas burners power down.
   d. The outdoor compressor powers down.
3. Press the LGWP Test button to terminate the simulated Leak Detected mode upon test completion.

The installation of the furnace control board is complete after.

## Unit Start-Up

**FOR YOUR SAFETY READ BEFORE OPERATING**

**⚠ WARNING**

Do not use this furnace if any part has been underwater. A flood-damaged furnace is extremely dangerous. Attempts to use the furnace can result in fire or explosion. Immediately call a qualified service technician to inspect the furnace and to replace all gas controls, control system parts, and electrical parts that have been wet or to replace the furnace, if deemed necessary.

**⚠ WARNING**

Danger of explosion. Can cause injury or product or property damage. If overheating occurs or if gas supply fails to shut off, shut off the manual gas valve to the appliance before shutting off electrical supply.

**⚠ CAUTION**

Before attempting to perform any service or maintenance, turn the electrical power to unit OFF at disconnect switch.

**BEFORE LIGHTING** the unit, smell all around the furnace area for gas. Be sure to smell next to the floor because some gas is heavier than air and will settle on the floor.

The gas valve on the ML296UHVK is equipped with a gas control switch (lever). Use only your hand to move switch. Never use tools. If the switch will not move by hand, do not try to repair it. Force or attempted repair may result in a fire or explosion.

**Placing the furnace into operation:**

ML296UHVK units are equipped with an automatic hot surface ignition system. Do not attempt to manually light burners on this furnace. Each time the thermostat calls for heat, the burners will automatically light. The ignitor does not get hot when there is no call for heat on these units.

**Priming Condensate Trap**

The condensate trap should be primed with water prior to start-up to ensure proper condensate drainage. Either pour 10 fl. oz. (300 ml) of water into the trap, or follow these steps to prime the trap:

1 - Follow the lighting instructions to place the unit into operation.

2 - Set the thermostat to initiate a heating demand.

3 - Allow the burners to fire for approximately 3 minutes.

4 - Adjust the thermostat to deactivate the heating demand.

5- Wait for the combustion air inducer to stop. Set the thermostat to initiate a heating demand and again allow the burners to fire for approximately 3 minutes

6 - Adjust the thermostat to deactivate the heating demand and wait for the combustion air inducer to stop. At this point, the trap should be primed with sufficient water to ensure proper condensate drain operation.

**⚠ WARNING**

If you do not follow these instructions exactly, a fire or explosion may result causing property damage, personal injury or death.

**Gas Valve Operation (FIGURE 64)**

1 - **STOP!** Read the safety information at the beginning of this section.

2 - Set the thermostat to the lowest setting.

3 - Turn off all electrical power to the unit.

4 - This furnace is equipped with an ignition device which automatically lights the burners. Do not try to light the burners by hand.

5 - Remove the access panel.

6 - Move gas valve switch to **OFF.** See FIGURE 64.

7 - Wait five minutes to clear out any gas. If you then smell gas, **STOP!** Immediately call your gas supplier from a neighbor's phone. Follow the gas supplier's instructions. If you do not smell gas go to next step.

8 - Move gas valve switch to **ON.** See FIGURE 64.

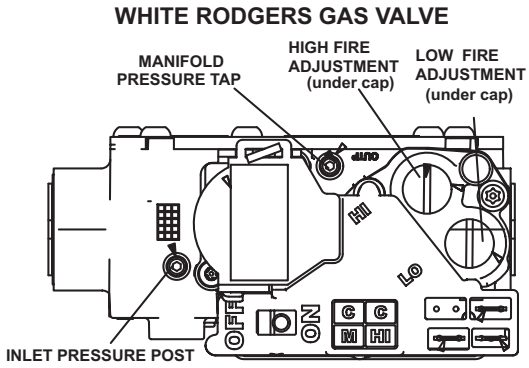


GAS VALVE SHOWN IN ON POSITION

**FIGURE 64**

9 - Replace the access panel.

10- Turn on all electrical power to the unit.

11- Set the thermostat to desired setting.

***NOTE -*** *When unit is initially started, steps 1 through 11 may need to be repeated to purge air from gas line.*

12- If the appliance will not operate, follow the instructions "Turning Off Gas to Unit" and call your service technician or gas supplier.

**Turning Off Gas to Unit**

1 - Set the thermostat to the lowest setting.

2 - Turn off all electrical power to the unit if service is to be performed.

3 - Remove the access panel.

4 - Move gas valve switch to **OFF.**

5 - Replace the access panel.

**Failure To Operate**

If the unit fails to operate, check the following:

1 - Is the thermostat calling for heat?

2 - Are access panels securely in place?

3 - Is the main disconnect switch closed?

4 - Is there a blown fuse or tripped breaker?

5 - Is the filter dirty or plugged? Dirty or plugged filters will cause the limit control to shut the unit off.

6 - Is gas turned on at the meter?

7 - Is the manual main shut-off valve open?

8 - Is the internal manual shut-off valve open?

9 - Is the unit ignition system in lockout? If the unit locks out again, inspect the unit for blockages.

## Gas Pressure Adjustment

**Gas Flow (Approximate)**

**TABLE 23**

| GAS METER CLOCKING CHART | | | | |
|---|---|---|---|---|
| ML296 Unit | Seconds for One Revolution | | | |
| | Natural | | LP | |
| | 1 cu ft Dial | 2 cu ft Dial | 1 cu ft Dial | 2 cu ft Dial |
| -045 | 80 | 160 | 200 | 400 |
| -070 | 55 | 110 | 136 | 272 |
| -090 | 41 | 82 | 102 | 204 |
| -110 | 33 | 66 | 82 | 164 |
| Natural-1000 btu/cu ft LP-2500 btu/cu ft | | | | |

Furnace should operate at least 5 minutes before checking gas flow. Determine time in seconds for two revolutions of gas through the meter. (Two revolutions assures a more accurate time.) Divide by two and compare to time in TABLE 23. If manifold pressure matches TABLE 25 and rate is incorrect, check gas orifices for proper size and restriction. Remove temporary gas meter if installed.

***NOTE -*** *To obtain accurate reading, shut off all other gas appliances connected to meter.*

**Supply Pressure Measurement**

An inlet post located on the gas valve provides access to the supply pressure. See FIGURE 64. Back out the 3/32 hex screw one turn, connect a piece of 5/16 tubing and connect to a manometer to measure supply pressure. See TABLE 25 for supply line pressure.

On multiple unit installations, each unit should be checked separately, with and without units operating. Supply pressure must fall within range listed in TABLE 25.

**Manifold Pressure Measurement**

***NOTE -*** *Pressure test adapter kit (10L34) is available from Lennox to facilitate manifold pressure measurement.*

A manifold pressure post located on the gas valve provides access to the manifold pressure. See FIGURE 64. Back out the 3/32 hex screw one turn, connect a piece of 5/16 tubing and connect to a manometer to measure manifold pressure.

To correctly measure manifold pressure, the differential pressure between the positive gas manifold and the negative burner box must be considered.

1 - Connect the test gauge positive side “+“ to manifold pressure tap on gas valve as noted above.

2 - Tee into the gas valve regulator vent hose and connect to test gauge negative “-”.

3 - Ignite unit on low fire and let run for 5 minutes to allow for steady state conditions.

4 - After allowing unit to stabilize for 5 minutes, record manifold pressure and compare to value given in TABLE 25.

5 - If necessary, make adjustments. FIGURE 64 shows location of high fire and low fire adjustment screws.

6 - Repeat steps 3, 4 and 5 on high fire. See values in TABLE 25.

7 - Shut unit off and remove manometer as soon as an accurate reading has been obtained. Turn the supply and manifold 3/32” hex screws one revolution back into the gas valve.

8 - Start unit and perform leak check. Seal leaks if found.

## Proper Combustion

Furnace should operate minimum 15 minutes with correct manifold pressure and gas flow rate before checking combustion. Take combustion sample beyond the flue outlet and compare to the tables below.

**TABLE 24**

| ML296 Model | $CO_2$% For Nat | | $CO_2$% For L.P | |
|---|---|---|---|---|
| | Low Fire | High Fire | Low Fire | High Fire |
| 045 | 5.4 - 6.4 | 7.5 - 8.5 | 6.4 - 7.4 | 8.8 - 9.8 |
| 070 | 5.3 - 6.3 | 7.4 - 8.4 | 6.3 - 7.3 | 8.7 - 9.7 |
| 090 | 5.8 - 6.8 | 7.6 - 8.6 | 6.8 - 7.8 | 8.9 - 9.9 |
| 110 | 6.1 - 7.1 | 8.0 - 9.0 | 7.1 - 8.1 | 9.3 - 10.3 |
| The maximum carbon monoxide reading should not exceed 100ppm. | | | | |

## High Altitude Information

***NOTE -*** In Canada, certification for installations at elevations over 4500 feet (1372 m) is the jurisdiction of local authorities.

Units may be installed at altitudes up to 10,000 ft. above sea level. See TABLE 25 for de-rate manifold values. Units installed at altitude of 7501 - 10,000 feet require an orifice change. Units installed at altitude of 4501 - 10,000 feet require a pressure switch change which can be ordered separately. TABLE 26 lists conversion kit and pressure switch requirements at varying altitudes.

The combustion air pressure switch is factory-set and requires no adjustment.

**TABLE 25**

Manifold and Supply Line Pressure 0-10,000ft.

| Unit | Gas | Manifold Pressure in. wg. | | | | | | | | | | Supply Line Pressure in. w.g 0 - 10,000 ft. | |
|---|---|---|---|---|---|---|---|---|---|---|---|---|---|
| | | 0 - 4500 ft | | 4501 - 5500 ft. | | 5501 - 6500 ft | | 6501 - 7500 ft | | 7501 - 10,000 ft | | | |
| | | Low Fire | High Fire | Low Fire | High Fire | Low Fire | High Fire | Low Fire | High Fire | Low Fire | High Fire | Min | Max |
| All Sizes | Natural | 1.7 | 3.5 | 1.6 | 3.3 | 1.5 | 3.2 | 1.5 | 3.1 | 1.7 | 3.5 | 4.5 | 13.0 |
| | LP/ Propane | 4.5 | 10.0 | 4.2 | 9.4 | 4.0 | 9.1 | 3.9 | 8.9 | 4.5 | 10.0 | 11.0 | 13.0 |

**NOTE - A natural to L.P. propane gas changeover kit is necessary to convert this unit. Refer to the changeover kit installation instruction for the conversion procedure.**

**TABLE 26**

LP/Propane Conversion Kit and Pressure Switch Requirements at Varying Altitudes

| Unit | Natural to LP/Propane | High Altitude Natural Burner Orifice Kit | High Altitude LP/ Propane Burner Orifice Kit | High Altitude Pressure Switch | |
|---|---|---|---|---|---|
| | 0 - 7500 ft | 7501 - 10,000 ft | 7501 - 10,000 ft | 4501 - 7500 ft | 7501 - 10,000 ft |
| 045 | *11K51 | 73W37 | *11K46 | 14A47 | 14A50 |
| 070 | | | | 14A54 | 32C81 |
| 090 | | | | 32C82 | 14A54 |
| 110 | | | | 32C77 | 32C80 |
| 135 | | | | 32C79 | 32C80 |

*** Conversion requires installation of a gas valve manifold spring which is provided with the gas conversion kit. Pressure switch is factory set. No adjustment necessary. All models use the factory-installed pressure switch from 0-4500 feet (0-1370 m).**

**Testing for Proper Venting and Sufficient Combustion Air for Non-Direct Vent Applications**

## ⚠ WARNING

CARBON MONOXIDE POISONING HAZARD!

Failure to follow the steps outlined below for each appliance connected to the venting system being placed into operation could result in carbon monoxide poisoning or death.

The following steps shall be followed for each appliance connected to the venting system being placed into operation, while all other appliances connected to the venting system are not in operation.

After the ML296UHVK gas furnace has been started, the following test should be conducted to ensure proper venting and sufficient combustion air has been provided to the ML296UHVK as well as to other gas-fired appliances which are separately vented.

If a ML296UHVK furnace replaces a Category I furnace which was commonly vented with another gas appliance, the size of the existing vent pipe for that gas appliance must be checked. Without the heat of the original furnace flue products, the existing vent pipe is probably oversized for the single water heater or other appliance. The vent should be checked for proper draw with the remaining appliance.

The test should be conducted while all appliances (both in operation and those not in operation) are connected to the venting system being tested. If the venting system has been installed improperly, or if provisions have not been made for sufficient amounts of combustion air, corrections must be made as outlined in the previous section.

1 - Seal any unused openings in the venting system.

2 - Visually inspect the venting system for proper size and horizontal pitch. Determine there is no blockage or restriction, leakage, corrosion, or other deficiencies which could cause an unsafe condition.3 - To the extent that it is practical, close all building doors and windows and all doors between the space in which the appliances connected to the venting system are located and other spaces of the building.

4 - Close fireplace dampers. 5 - Turn on clothes dryers and any appliances not connected to the venting system. Turn on any exhaust fans, such as range hoods and bathroom exhausts, so they will operate at maximum speed. Do not operate a summer exhaust fan.

6 - Follow the lighting instruction to place the appliance being inspected into operation. Adjust thermostat so appliance will operate continuously.

7 - Use the flame of match or candle to test for spillage of flue gases at the draft hood relief opening after 5 minutes of main burner operation.

8 - If improper venting is observed during any of the above tests, the venting system must be corrected or sufficient combustion/make-up air must be provided. The venting system should be re-sized to approach the minimum size as determined by using the appropriate tables in appendix G in the current standards of the National Fuel Gas Code ANSI-Z223.1/NPFA 54 in the U.S.A., and the appropriate Natural Gas and Propane appliances venting sizing tables in the current standard of the CSA-B149 Natural Gas and Propane Installation Codes in Canada.

9 - After determining that each appliance remaining connected to the common venting system properly vents when tested as indicated in step 3, return doors, windows, exhaust fans, fireplace dampers and any other gas-burning appliance to their previous condition of use.

## Repair Parts List

The following repair parts are available through Lennox dealers. When ordering parts, include the complete furnace model number listed on the CSA nameplate -- Example: ML296UH045XV36BK. **All service must be performed by a licensed professional installer (or equivalent), service agency, or gas supplier.**

**Cabinet Parts**

- Outer access panel
- Blower access panel
- Top Cap

**Control Panel Parts**

- Transformer
- Integrated control board
- Door interlock switch

**Blower Parts**

- Blower wheel
- Motor
- Motor mounting frame
- Motor capacitor
- Blower housing cutoff plate

**Heating Parts**

- Flame Sensor
- Heat exchanger assembly
- Gas manifold
- Combustion air inducer
- Gas valve
- Main burner cluster
- Main burner orifices
- Pressure switch
- Ignitor
- Primary limit control
- Flame rollout switches

**Refrigerant Detection System Parts**

- Refrigerant Detection Sensor
- Refrigerant Line Set Sleeve

## Other Unit Adjustments

**Primary Limit.**

The primary limit is located on the heating compartment vestibule panel. This limit is factory set and requires no adjustment.

**Flame Rollout Switches (Two)**

These manually reset switches are located on the front of the burner box.

**Pressure Switch**

The pressure switch is located in the heating compartment on the cold end header box. This switch checks for proper combustion air inducer operation before allowing ignition trial. The switch is factory-set and must not be adjusted.

**Temperature Rise**

Place the unit into operation with a second-stage heating demand. After supply and return air temperatures have stabilized, check the temperature rise. If necessary, adjust the heating blower speed to maintain the temperature rise within the range shown on the unit nameplate. See"" on page 42 for "Allowable Heating Speeds". Increase the blower speed to decrease the temperature rise. Decrease the blower speed to increase the temperature rise. Failure to properly adjust the temperature rise may cause erratic limit operation.

**Electrical**

1 - Check all wiring for loose connections.

2 - Check for the correct voltage at the furnace (furnace operating). Correct voltage is 120VAC + 10%

3 - Check amp-draw on the blower motor with blower access panel in place.

Unit Nameplate_____Actual_____

**Exhaust and Air Intake Pipe**

1 - Check exhaust and air intake connections for tightness and to make sure there is no blockage.

2 - Is pressure switch closed? Obstructed exhaust pipe will cause unit to shut off at pressure switch. Check termination for blockages.

3 - Obstructed pipe or termination may cause rollout switches to open. Reset manual flame rollout switches on burner box assembly if necessary.

**Flame Sensor**

A flame sensor is located on the left side of the burner support. The sensor tip protrudes into the flame envelope of the left-most burner. During operation, flame is sensed by current passed through the flame and sensing electrode. The control allows the gas valve to remain open as long as flame signal is sensed. See TABLE 27 for flame signal.

**TABLE 27**

Flame Signal in Microamps

| Normal | Low | Drop Out |
|---|---|---|
| 1.5 or greater | 1.0 or less | 0.5 |

## Heating Sequence of Operation

**Electronic Ignition**

The two-stage integrated control used in this furnace has an added feature of an internal Watchguard control. The feature serves as an automatic reset device for ignition control lockout caused by ignition failure. After one hour of continuous thermostat demand for heat, the Watchguard will break and remake thermostat demand to the furnace and automatically reset the control to begin the ignition sequence.

***NOTE -*** *The ignition control thermostat selection DIP switch is* factory-set in the "TWO-STAGE" position.

**Applications Using a Two-Stage Thermostat**

**A - Heating Sequence -- Integrated Control Thermostat Selection DIP Switch 1 OFF in "Two-Stage" Position (Factory Setting)**

1 - On a call for heat, thermostat first-stage contacts close sending a signal to the integrated control. The integrated control runs a self-diagnostic program and checks high temperature limit switches for normally closed contacts and pressure switches for normally open contacts. The combustion air inducer is energized at low speed.

2 - Once the control receives a signal that the low pressure switch has closed, the combustion air inducer begins a 15-second pre-purge in low speed.

***NOTE -*** *If the low fire pressure switch does not close the combustion air inducer will switch to high fire. After a 15 second pre-purge the high fire pressure switch will close and the unit will begin operation on high fire. After 10 to 20 seconds of high fire operation the unit will switch to low fire.*

3 - After the pre-purge is complete, a 20-second initial ignitor warm-up period begins. The combustion air inducer continues to operate at low speed.

4 - After the 20-second warm-up period has ended, the gas valve is energized on low fire (first stage) and ignition occurs. At the same time, the control module sends a signal to begin an indoor blower 30-second ON-delay. When the delay ends, the indoor blower motor is energized on the low fire heating speed, the HUM contacts close energizing the humidifier and 120V ACC terminal is energized. The furnace will continue this operation as long as the thermostat has a first-stage heating demand.

5 - If second-stage heat is required, the thermostat second- stage heat contacts close and send a signal to the integrated control. The integrated control initiates a 30-second second-stage recognition delay.

6 - At the end of the recognition delay, the integrated control energizes the combustion air inducer at high speed. The control also checks the high fire (second stage) pressure switch to make sure it is closed. The high fire (second stage) gas valve is energized and the indoor blower motor is energized for operation at the high fire heating speed.

7 - When the demand for high fire (second stage) heat is satisfied, the combustion air inducer is switched to the low-fire heating speed and the high-fire (second stage) gas valve is de-energized. The low-fire (first stage) gas valve continues operation. The indoor blower motor is switched to the low-fire heating speed.

8 - When the thermostat demand for low-fire (first stage) heat is satisfied, the gas valve is de-energized and the field-selected indoor blower off delay begins. The combustion air inducer begins a 5-second post-purge period.

9 - When the combustion air post-purge period is complete, the inducer and the HUM contacts are de-energized. The indoor blower is de-energized at the end of the off delay as well as the ACC terminals.

**Applications Using A Single-Stage Thermostat**

**B - Heating Sequence -- Integrated Control Thermostat Selection DIP Switch 1 ON in "Single-Stage" Position**

***NOTE -*** *In these applications, two-stage heat will be initiated by the integrated control if heating demand has not been satisfied after the field adjustable period (7 or 12 minutes).*

1 - On a call for heat, thermostat first-stage contacts close sending a signal to the integrated control. The integrated control runs a self-diagnostic program and checks high temperature limit switches for normally closed contacts and pressure switches for normally open contacts. The combustion air inducer is energized at low speed.

2 - Once the control receives a signal that the low pressure switch has closed, the combustion air inducer begins a 15-second pre-purge in low speed.

***NOTE -*** *If the low fire pressure switch does not close the combustion air inducer will switch to high fire. After a 15 second pre-purge the high fire pressure switch will close and the unit will begin operation on high fire. After 10 to 20 seconds of high fire operation the unit will switch to low fire.*

3 - After the pre-purge is complete, a 20-second initial ignitor warm-up period begins. The combustion air inducer continues to operate at low speed.

4 - After the 20-second warm-up period has ended, the gas valve is energized on low fire (first stage) and ignition occurs. At the same time, the control module sends a signal to begin an indoor blower 30-second ON-delay. When the delay ends, the indoor blower motor is energized on the low fire heating speed and the HUM contacts are energized. The integrated control also initiates a second-stage on delay (factory-set at 7 minutes; adjustable to 12 minutes).

5 - If the heating demand continues beyond the secondstage on delay, the integrated control energizes the combustion air inducer at high speed. The control also checks the high fire (second stage) pressure switch to make sure it is closed. The high fire (second stage) gas valve is energized and the indoor blower motor is energized for operation at the high fire heating speed.

6 - When the thermostat heating demand is satisfied, the combustion air inducer begins a 5-second low speed post-purge. The field-selected indoor blower off delay begins. The indoor blower operates at the low-fire heating speed.

7 - When the combustion air post-purge period is complete, the inducer and the HUM contacts are de-energized. The indoor blower is de-energized at the end of the off delay as well as the 120 ACC terminals

**⚠ WARNING**

The system must not be in either the passive or active dehumidification mode when charging a cooling system.

**Single Stage Cooling**

A call for cooling from the thermostat closes the R to Y circuit on the integrated ignition/blower control board. The control waits for a 1-second delay before energizing the circulating blower to 82% of the selected cooling CFM (passive dehumidification mode). After 7.5 minutes, the circulating blower automatically ramps up to 100% of the selected cooling airflow. When the call for cooling is satisfied, the circulating blower runs at cooling speed for 45 seconds then shuts down.

**Two-Stage Cooling**

A call for 1st stage cooling from the thermostat closes the R to Y circuit on the control board. The control waits for a 2- second delay before energizing the circulating blower. The blower motor runs at 57% of the selected air flow for the first 7.5 minutes of the 2nd stage cooling demand (passive dehumidification mode). After 7.5 minutes, the blower motor runs at 70% of the selected cooling air flow until 1st stage cooling demand is satisfied.

A call for 2nd stage cooling from the thermostat closes the R to Y2 circuit on the control board. The blower motor ramps up to 100% of the selected cooling air flow. When the demand for cooling is met, the blower ramps down to Y1 until satisfied, then runs on low cool speed for 45 seconds then shuts down.

**Heat Pump**

For heat pump operation, clip the jumper wire located bellow the O terminal on the integrated ignition/blower control board. In heat pump mode, a call for heat will result in the circulating air blower operating at the selected cooling airflow with no ramp-up period.

## Service

**⚠ WARNING**

ELECTRICAL SHOCK, FIRE,
OR EXPLOSION HAZARD.

Failure to follow safety warnings exactly could result in dangerous operation, serious injury, death or property damage.

Improper servicing could result in dangerous operation, serious injury, death, or property damage. Before servicing, disconnect all electrical power to furnace.

When servicing controls, label all wires prior to disconnecting. Take care to reconnect wires correctly. Verify proper operation after servicing.

**⚠ WARNING**

The blower access panel must be securely in place when the blower and burners are operating. Gas fumes, which could contain carbon monoxide, can be drawn into living space resulting in personal injury or death.

**Annual Furnace Maintenance**

At the beginning of each heating season, and to comply with the **Lennox Limited Warranty,** your system should be checked as follows:

1 - Check wiring for loose connections, voltage at indoor unit and amperage of indoor motor.

2- Check the condition of the belt and shaft bearings if applicable.

3- Inspect all gas pipe and connections for leaks.

4- Check the cleanliness of filters and change if necessary (monthly).

5- Check the condition and cleanliness of burners and heat exchanger and clean if necessary.

6- Check the cleanliness of blower assembly and clean the housing, blower wheel and blower motor if necessary.

7- Inspect the condensate drain and trap for leaks and cracks. The drain and trap must also be cleaned and the trap must be primed with water. Inspect the rubber hoses connected to the pressure switches for cracks or loose connections, replace as necessary. Remove the rubber hoses from the cold end header box and inspect for any blockage, clean as needed. If strainers are installed in the hoses remember to remove and clean before reinstalling the hoses.

8- Evaluate the heat exchanger integrity by inspecting the heat exchanger per the AHRI heat exchanger inspection procedure. This procedure can be viewed at www.ahrinet.org

9- Ensure sufficient combustion air is available to the furnace. Fresh air grilles and louvers (on the unit and in the room where the furnace is installed) must be properly sized, open and unobstructed to provide combustion air.

10- Inspect the furnace intake and exhaust pipes to make sure they are in place, structurally sound, without holes, blockage or leakage and the exhaust pipe is sloped toward the furnace. Inspect terminations to ensure they are free of obstructions and are structurally sound. Inspect the furnace return air duct connection to ensure the duct is sealed to the furnace. Check for air leaks on supply and return ducts and seal where necessary.

11- Inspect the furnace return air duct connection to ensure the duct is sealed to the furnace. Check for air leaks on supply and return ducts and seal where necessary.

12- Check the condition of the furnace cabinet insulation and repair if necessary.

13- Perform a complete combustion analysis during the furnace inspection to ensure proper combustion and operation. Consult Service Literature for proper combustion values.

14- Verify operation of CO detectors and replace batteries as required.

15 - Inspect the Low GWP sensor / sensors and rubber sleeve.

Perform a general system test. Turn on the furnace to check operating functions such as the start-up and shut-off operation.

1 - Check the operation of the ignition system, inspect and clean flame sensor. Check microamps before and after. Check controls and safety devices (gas valve, flame sensor, temperature limits). Consult Service Manual for proper operating range. Thermal Limits should be checked by restricting airflow and not disconnecting the indoor blower. For additional details, please see Service and Application Note H049.

2 - Verify that system total static pressure and airflow settings are within specific operating parameters.

3 - Clock gas meter to ensure that the unit is operating at the specified firing rate for each stage of operation. Check the supply pressure and the manifold pressure on both low fire and high fire. If manifold pressure adjustment is necessary, consult the Service Literature for unit specific information on adjusting gas pressure. Not all gas valves are adjustable. Verify correct temperature rise.

**Winterizing and Condensate Trap Care**

1 - Turn off power to the furnace.

2 - Have a shallow pan ready to empty condensate water.

3 - Remove the clean out cap from the condensate trap and empty water. Inspect the trap then reinstall the clean out cap.

**Cleaning The Burner Assembly**

If cleaning the burner assembly becomes necessary, follow the steps below:

1 - Turn off electrical and gas power supplies to furnace. Remove upper and lower furnace access panels.

2 - Disconnect the wires from the gas valve.

3 - Remove the burner box cover (if equipped).

4 - Disconnect the gas supply line from the gas valve. Remove gas valve/manifold assembly.

5 - Mark and disconnect sensor wire from the sensor. Disconnect wires from flame rollout switches.

6 - Disconnect combustion air intake pipe. It may be necessary to cut the existing pipe to remove burner box assembly.

7 - Remove four screws which secure burner box assembly to vest panel. Remove burner box from the unit.

8 - Use the soft brush attachment on a vacuum cleaner to gently clean the face of the burners. Visually inspect the inside of the burners and crossovers for any blockage caused by foreign matter. Remove any blockage.

9 - Reinstall the burner box assembly using the existing four screws. Make sure that the burners line up in the center of the burner ports.

10 - Reconnect the sensor wire and reconnect the 2-pin plug to the ignitor wiring harness. Reconnect wires to flame rollout switches.

11 -Reinstall the gas valve manifold assembly. Reconnect the gas supply line to the gas valve. Reinstall the burner box cover.

12 - Reconnect wires to gas valve.

13 - Replace the blower compartment access panel.

14 - Refer to instruction on verifying gas and electrical connections when re-establishing supplies.

15 - Follow lighting instructions to light and operate furnace for 5 minutes to ensure that heat exchanger is clean and dry and that furnace is operating properly.

16 - Replace heating compartment access panel.

**Modifications to NFPA-54, Chapter 10**

**Revise NFPA-54 section 10.8.3 to add the following requirements:**

For all side wall, horizontally vented, gas-fueled equipment installed in every dwelling, building or structure used in whole or in part for residential purposes, including those owned or operated by the Commonwealth and where the side wall exhaust vent termination is less than seven (7) feet above the finished grade in the area of the venting, including but not limited to decks and porches, the following requirements shall be satisfied:

1 - INSTALLATION OF CARBON MONOXIDE DETECTORS. At the time of installation of the side wall, horizontally vented, gas-fueled equipment, the installing plumber or gasfitter shall observe that a hard-wired carbon monoxide detector with an alarm and battery backup is installed on the floor level where the gas equipment is to be installed. In addition, the installing plumber or gasfitter shall observe that a battery-operated or hard-wired carbon monoxide detector with an alarm is installed on each additional level of the dwelling, building or structure served by the side wall, horizontally vented, gas-fueled equipment. It shall be the responsibility of the property owner to secure the services of qualified licensed professionals for the installation of hard-wired carbon monoxide detectors.

a. In the event that the side wall, horizontally vented, gas-fueled equipment is installed in a crawl space or an attic, the hard-wired carbon monoxide detector with alarm and battery back-up may be installed on the next adjacent floor level.

b. In the event that the requirements of this subdivision cannot be met at the time of completion of installation, the owner shall have a period of thirty (30) days to comply with the above requirements; provided, however, that during said thirty (30) day period, a battery-operated carbon monoxide detector with an alarm shall be installed.

2 - APPROVED CARBON MONOXIDE DETECTORS carbon monoxide detector as required in accordance with the above provisions shall comply with NFPA 720 and be ANSI/UL 2034 listed and IAS certified.

3 - SIGNAGE. A metal or plastic identification plate shall be permanently mounted to the exterior of the building at a minimum height of eight (8) feet above grade directly in line with the exhaust vent terminal for the horizontally vented, gas-fueled heating appliance or equipment. The sign shall read, in print size no less than one-half (1/2) inch in size, “GAS VENT DIRECTLY BELOW. KEEP CLEAR OF ALL OBSTRUCTIONS

4 - INSPECTION. The state or local gas inspector of the side wall, horizontally vented, gas-fueled equipment shall not approve the installation unless, upon inspection, the inspector observes carbon monoxide detectors and signage installed in accordance with the provisions of 248 CMR 5.08(2)(a) 1 through 4.

**EXEMPTIONS: The following equipment is exempt from 24 CMR 5.08(2)(a) 1 through 4:**

1 - The equipment listed in Chapter 10 entitled “Equipment Not Required to Be Vented” in the most current edition of NFPA 54 as adopted by the Board; and

2 - Product Approved side wall, horizontally vented, gas fueled equipment installed in a room or structure separate from the dwelling, building or structure used in whole or in part for residential purposes.

**MANUFACTURER REQUIREMENTS - GAS EQUIPMENT VENTING SYSTEM PROVIDED.**

When the manufacturer of Product Approved side wall, horizontally vented, gas-fueled equipment provides a venting system design or venting system components with the equipment, the instructions provided by the manufacturer for installation of the equipment and the venting system shall include:

1 - Detailed instructions for the installation of the venting system design or the venting system components: and

2 - A complete parts list for the venting system design or venting system.

**MANUFACTURER REQUIREMENTS -**

**GAS EQUIPMENT VENTING SYSTEM NOT PROVIDED**.

When the manufacturer of Product Approved side wall, horizontally vented, gas-fueled equipment does not provide the parts for venting the flue gases, but identifies “special venting systems,” the following requirements shall be satisfied by the manufacturer:

1 - The referenced “special venting system” instructions shall be included with the appliance or equipment installation instructions; and

2 - The “special venting systems” shall be Product Approved by the Board, and the instructions for that system shall include a parts list and detailed installation instructions.

**A copy of all installation instructions for all Product Approved side wall, horizontally vented, gas-fueled equipment, all venting instructions, all parts lists for venting instructions, and/or all venting design instructions shall remain with the appliance or equipment at the completion of the installation.**

## FOR THE PROVINCE OF ONTARIO, HORIZONTAL SIDEWALL VENT APPLICATIONS ONLY

For exterior horizontal venting applications, the 2” X 1.5” reducer for 2” venting at the point where the exhaust pipe exits the structure is not required in direct or nondirect vent applications in the Province of Ontario. In these applications, the vent should be oriented such that the exhaust plume is unobjectionable. If the installation requires more separation between the flue gases and the building structure, a reducer may be installed on the exhaust pipe to increase the flue gas velocity.

## ADDENDUM FOR ALL PROVINCES OF CANADA

See below for venting in all provinces of Canada.

Lennox approves the following termination for use in all provinces of Canada.

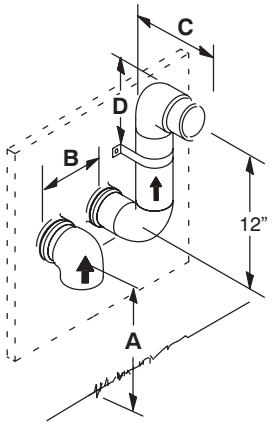


| | 2” (51MM) Vent Pipe | 3” (76MM) Vent Pipe |
|---|---|---|
| **A –** Clearance above grade or average snow accumulation | 12” (305 mm) Min. | 12” (305 mm) Min. |
| **B –** Horizontal separation between intake and exhaust | 6” (152 mm) Min. 24” (610 mm) Max. | 6” (152 mm) Min. 24” (610 mm) Max. |
| **C –** Exhaust pipe length | Per: Saskatchewan Code of Practice | |
| **D –** Wall support distance from top of each pipe (intake/exhaust) | 6” (152 mm) Max. | 6” (152 mm) Max. |

**NOTE –** Flue gas may be acidic and may adversely affect some building materials. If flue gases impinge on the building materials, a corrosion–resistant shield should be used to protect the wall surface. The shield should be constructed using wood, sheet metal or other suitable material. All seams, joints, cracks, etc. in affected area, should be sealed using an appropriate sealant.

## BLOWER DATA

**ML296UH070XV36BK BLOWER PERFORMANCE (less filter)**

**BOTTOM RETURN AIR, SINGLE SIDE RETURN AIR OR SIDE RETURN AIR WITH OPTIONAL RETURN AIR BASE**

**0 through 0.8 in. w.g. (Heating) and 0 through 1.0 in. w.g. (Cooling) External Static Pressure Range**

| "ADJUST" Switch Positions | Speed Switch Positions | | | | | | | |
|---|---|---|---|---|---|---|---|---|
| | Second Stage "HEAT" Speed - cfm | | | | Second Stage "COOL" Speed - cfm | | | |
| | Low | Med-Low | [1] Med-High | High | Low | Med-Low | Med-High | [1] High |
| + | 955 | 1025 | 1085 | 1175 | 920 | 1095 | 1235 | 1330 |
| [1] NORM | 880 | 935 | 990 | 1070 | 840 | 990 | 1120 | 1200 |
| — | 790 | 840 | 890 | 965 | 750 | 885 | 1000 | 1075 |
| "ADJUST" Switch Positions | First Stage "HEAT" Speed - cfm | | | | First Stage "COOL" Speed - cfm | | | |
| | Low | Med-Low | [1] Med-High | High | Low | Med-Low | Med-High | [1] High |
| + | 865 | 925 | 980 | 1055 | 655 | 780 | 850 | 945 |
| [1] NORM | 795 | 845 | 900 | 975 | 580 | 700 | 765 | 850 |
| — | 715 | 770 | 805 | 865 | 515 | 630 | 690 | 760 |

[1] Factory default jumper setting.

NOTES - The effect of static pressure is included in air volumes shown.
First stage HEAT is approximately **90%** of the same second stage HEAT speed position.
First stage COOL (two-stage air conditioning units only) is approximately **70%** of the same second stage COOL speed position.
Continuous Fan Only speed is approximately **38%** of the same second stage COOL speed position.
Lennox® LZSV Variable Zoning System Applications - Minimum blower speed is 300 cfm.

## BLOWER DATA

**ML296UH045XV36BK BLOWER PERFORMANCE (less filter)**

**BOTTOM RETURN AIR, SINGLE SIDE RETURN AIR OR SIDE RETURN AIR WITH OPTIONAL RETURN AIR BASE**

**0 through 0.8 in. w.g. (Heating) and 0 through 1.0 in. w.g. (Cooling) External Static Pressure Range**

| "ADJUST" Switch Positions | Speed Switch Positions | | | | | | | |
|---|---|---|---|---|---|---|---|---|
| | Second Stage "HEAT" Speed - cfm | | | | Second Stage "COOL" Speed - cfm | | | |
| | Low | Med-Low | [1] Med-High | High | Low | Med-Low | Med-High | [1] High |
| + | 765 | 860 | 960 | 1050 | 885 | 1095 | 1210 | 1370 |
| [1] NORM | 690 | 775 | 855 | 950 | 800 | 990 | 1115 | 1255 |
| — | 610 | 710 | 770 | 845 | 710 | 880 | 995 | 1115 |
| "ADJUST" Switch Positions | First Stage "HEAT" Speed - cfm | | | | First Stage "COOL" Speed - cfm | | | |
| | Low | Med-Low | [1] Med-High | High | Low | Med-Low | Med-High | [1] High |
| + | 700 | 790 | 855 | 925 | 615 | 780 | 900 | 980 |
| [1] NORM | 640 | 705 | 780 | 840 | 565 | 690 | 800 | 895 |
| — | 550 | 645 | 700 | 755 | 500 | 615 | 715 | 790 |

[1] Factory default jumper setting.

NOTES - The effect of static pressure is included in air volumes shown.
First stage HEAT is approximately **91%** of the same second stage HEAT speed position.
First stage COOL (two-stage air conditioning units only) is approximately **70%** of the same second stage COOL speed position.
Continuous Fan Only speed is approximately **38%** of the same second stage COOL speed position.
Lennox® LZSV Variable Zoning System Applications - Minimum blower speed is 300 cfm.

## BLOWER DATA

**ML296UH090XV48CK BLOWER PERFORMANCE (less filter)**

**BOTTOM RETURN AIR, SINGLE SIDE RETURN AIR OR SIDE RETURN AIR WITH OPTIONAL RETURN AIR BASE**

**0 through 0.8 in. w.g. (Heating) and 0 through 1.0 in. w.g. (Cooling) External Static Pressure Range**

| "ADJUST" Switch Positions | Speed Switch Positions | | | | | | | |
|---|---|---|---|---|---|---|---|---|
| | Second Stage "HEAT" Speed - cfm | | | | Second Stage "COOL" Speed - cfm | | | |
| | Low | Med-Low | [1] Med-High | High | Low | Med-Low | Med-High | [1] High |
| + | 1205 | 1290 | 1330 | 1555 | 1135 | 1355 | 1525 | 1765 |
| [1] NORM | 1075 | 1155 | 1200 | 1410 | 1080 | 1270 | 1435 | 1655 |
| — | 970 | 1040 | 1085 | 1250 | 940 | 1115 | 1255 | 1460 |
| "ADJUST" Switch Positions | First Stage "HEAT" Speed - cfm | | | | First Stage "COOL" Speed - cfm | | | |
| | Low | Med-Low | [1] Med-High | High | Low | Med-Low | Med-High | [1] High |
| + | 1125 | 1205 | 1245 | 1475 | 830 | 985 | 1095 | 1260 |
| [1] NORM | 1040 | 1110 | 1135 | 1345 | 765 | 920 | 1040 | 1195 |
| — | 935 | 1000 | 1030 | 1210 | 675 | 795 | 900 | 1040 |

[1] Factory default jumper setting.

NOTES - The effect of static pressure is included in air volumes shown.
First stage HEAT is approximately **95%** of the same second stage HEAT speed position.
First stage COOL (two-stage air conditioning units only) is approximately **70%** of the same second stage COOL speed position.
Continuous Fan Only speed is approximately **38%** of the same second stage COOL speed position.
Lennox® LZSV Variable Zoning System Applications - Minimum blower speed is 380 cfm.

## BLOWER DATA

**ML296UH110XV60CK BLOWER PERFORMANCE (less filter)**

**BOTTOM RETURN AIR, SINGLE SIDE RETURN AIR OR SIDE RETURN AIR WITH OPTIONAL RETURN AIR BASE**

**NOTE -** Air volumes in **bold** (over 1800 cfm) must have one of the following:

- Single side return air and Optional Return Air Base with transition that must accommodate required 20 x 25 x 1 inch air filter to maintain proper velocity
- Bottom return air
- Return air from both sides
- Bottom and one side return air

**0 through 0.8 in. w.g. (Heating) and 0 through 1.0 in. w.g. (Cooling) External Static Pressure Range**

| "ADJUST" Switch Positions | Speed Switch Positions | | | | | | | |
|---|---|---|---|---|---|---|---|---|
| | Second Stage "HEAT" Speed - cfm | | | | Second Stage "COOL" Speed - cfm | | | |
| | Low | Med-Low | [1] Med-High | High | Low | Med-Low | Med-High | [1] High |
| + | 1680 | **1805** | **1950** | **2105** | 1405 | 1620 | **1820** | **2055** |
| [1] NORM | 1550 | 1665 | **1800** | **1950** | 1255 | 1455 | 1655 | **1860** |
| — | 1400 | 1505 | 1625 | 1750 | 1145 | 1335 | 1515 | 1700 |
| "ADJUST" Switch Positions | First Stage "HEAT" Speed - cfm | | | | First Stage "COOL" Speed - cfm | | | |
| | Low | Med-Low | [1] Med-High | High | Low | Med-Low | Med-High | [1] High |
| + | 1290 | 1390 | 1505 | 1615 | 1015 | 1165 | 1325 | 1485 |
| [1] NORM | 1170 | 1270 | 1375 | 1475 | 905 | 1055 | 1200 | 1335 |
| — | 1070 | 1160 | 1250 | 1345 | 800 | 950 | 1080 | 1220 |

[1] Factory default jumper setting.

NOTES - The effect of static pressure is included in air volumes shown.
First stage HEAT is approximately **75%** of the same second stage HEAT speed position.
First stage COOL (two-stage air conditioning units only) is approximately **70%** of the same second stage COOL speed position.
Continuous Fan Only speed is approximately **38%** of the same second stage COOL speed position.
Lennox® LZSV Variable Zoning System Applications - Minimum blower speed is 460 cfm.

LENNOX

## UNIT SET UP
## (typical)

**Furnace:**
**Model Number_____**

**Serial Number_____**

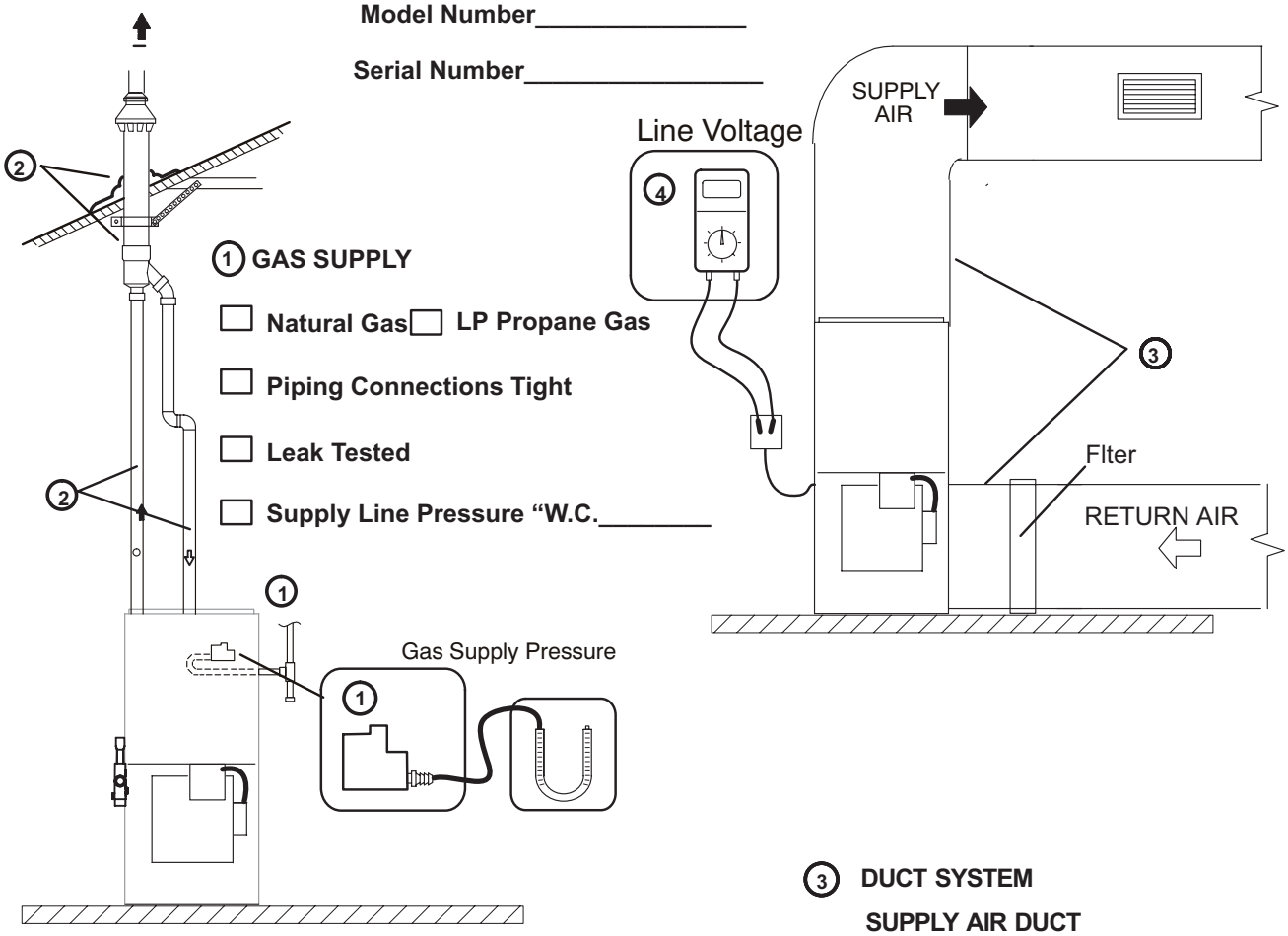


**1 GAS SUPPLY**

- ☐ Natural Gas ☐ LP Propane Gas
- ☐ Piping Connections Tight
- ☐ Leak Tested
- ☐ Supply Line Pressure "W.C._____

**2 INTAKE / EXHAUST PIPE**

- ☐ All Joints Primed and Glued
- ☐ Terminations Installed Properly
- ☐ Horizontal Pipes Sloped (if applicable)
- ☐ Condensate Trap Primed / Line Sloped
- ☐ Pipes Supported
- ☐ Heat Cable Installed and Operable (if applicable)

**3 DUCT SYSTEM**

**SUPPLY AIR DUCT**

- ☐ Sealed
- ☐ Insulated (if necessary)

**RETURN DUCT**

- ☐ Sealed
- ☐ Filter Installed and Clean
- ☐ Grilles Unobstructed

**4 VOLTAGE CHECK**

**Supply Voltage _____**

- ☐ Electrical Connections Tight

LENNOX

# UNIT OPERATION

## HEATING MODE

1. GAS MANIFOLD PRESSURE "W.C._____
2. COMBUSTION SAMPLE $CO_2$%_____CO PPM_____
3. INDOOR BLOWER AMPS_____
4. TEMPERATURE RISE
   - Supply Duct Temperature _____
   - Return Duct Temperature – _____
   - Temperature Rise = _____
5. TOTAL EXTERNAL STATIC
   - Supply External Static _____
   - Return External Static + _____
   - Total External Static = _____
6. CONDENSATE LINE
   - ☐ Leak Free
7. VENT PIPE
   - ☐ Leak Free

## COOLING MODE

3. INDOOR BLOWER AMPS_____
4. TEMPERATURE DROP
   - Return Duct Temperature _____
   - Supply Duct Temperature – _____
   - Temperature Drop = _____
5. TOTAL EXTERNAL STATIC (dry coil)
   - Supply External Static _____
   - Return External Static + _____
   - Total External Static = _____
8. DRAIN LINE
   - ☐ Leak Free
9. THERMOSTAT
   - ☐ Adjusted and Programmed
   - ☐ Explained Operation to Owner

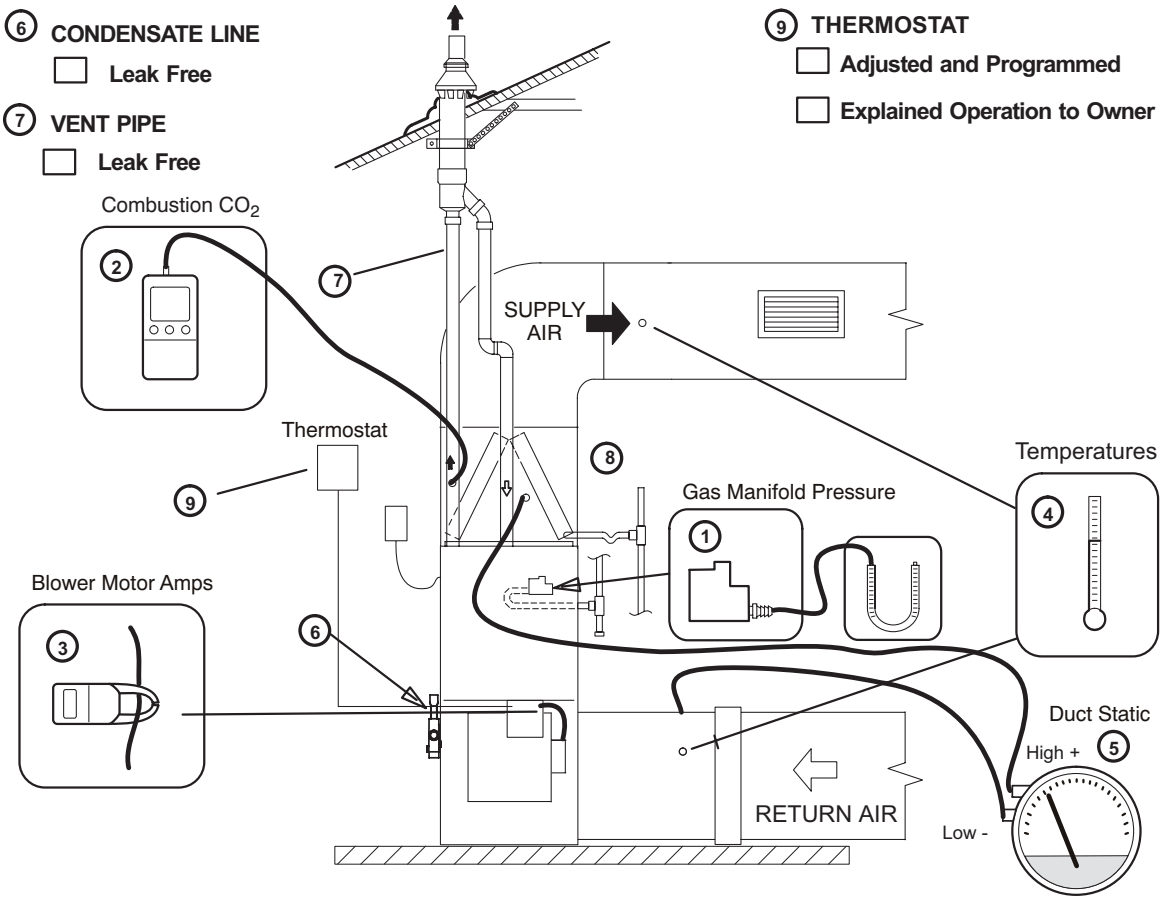


Contractor's: Name_____Telephone_____Checklist Completed_____

Job Address_____-_____Technician's Name_____

PFAS