LRP13ACK

Constant Torque Blower | Three-Phase | R-454B | 60Hz

COMMERCIAL
PRODUCT SPECIFICATIONS (EHB)

SEER2 - 13.40
3 to 5 Tons
Cooling Capacity - 34,000 to 56,000 Btuh
Optional Electric Heat - 5 to 23 kW

MODEL NUMBER IDENTIFICATION

L RP 13 AC K 36 E Y -1 A

- **Brand** — L = Lennox
- **Product Type** — RP = Light Commercial Packaged Unit
- **Nominal SEER2**
- **Unit Type** — AC = Electric/Electric Unit
- **Refrigerant Type** — K = R-454B
- **Nominal Cooling Capacity** — 36 = 3 tons; 48 = 4 tons; 60 = 5 tons
- **Blower** — E = High Efficiency Constant Torque Blower Motor
- **Voltage** — Y = 208/230V-3 phase-60Hz; G = 460V-3 phase-60Hz
- **Major Revision Sequence** — 1 = 1st Generation
- **Minor Revision Sequence** — A = 1st Generation

Form Number 211159 | July 2026
Supersedes all previous versions

CONTENTS

Approvals And Warranty 2
Blower Data 12
Dimensions 18
- Accessories 19
- Unit 18
Electrical/Electric Heat Data 14
Electric Heat Capacities 16
Features 2
Installation Clearances 17
Model Number Identification. 1
Optional Conventional Temperature Control Systems. 8
Options / Accessories 9
Ratings 11
Specifications 7
Weight Data 17

APPROVALS AND WARRANTY

APPROVALS

- AHRI Standard 210/240 certified
- Design Certified by ETL Intertek
- Unit and components ETL, NEC and CEC bonded for grounding to meet safety standards for servicing
- All models meet UL 60335-2-40 Refrigerant Detector Requirements
- Optional electric heaters are ETL listed for the US and Canada and are rated and tested according to DOE test procedures and FTC labeling regulations
- All models with the Optional Seismic Strapping Kit installed have Seismic Certification for 2018 International Building Code (IBC) and 2019 California Building Code (CBC) ASCE 7
- All models are ASHRAE 90.1 compliant

WARRANTY

- Compressors - Limited five years
- All other covered components - Limited one year

FEATURES

COOLING SYSTEM

R-454B Refrigerant
- Low GWP (Global Warming Potential)
- Zero ODP (Ozone Depletion Potential)
- Low Toxicity/Lower Flammability - A2L
- Unit is factory pre-charged

Evaporator and Condenser Coils
- Copper tube with aluminum fin coils
- Factory leak tested

Anti-Microbial Condensate Drain Pan
- Anti-Microbial additive resists growth of mold and mildew on drain pan which improves indoor air quality and reduces drain line blockage
- Insulated to reduce condensation
- Side drain connection

Drain Pan Overflow Switch
- Monitors condensate level in drain pan
- Shuts down unit if drain becomes clogged

Outdoor Coil Fan Motor
- Weather protected heavy duty condenser fan motor
- Coated steel fan blades for long life
- Corrosion-resistant coated steel fan guard
- Internally mounted
- Totally enclosed fan motor

High Pressure Switch
- Protects the system from high pressure conditions
- Automatic reset.

Loss of Charge Switch
- Protects compressor from damage from low/no refrigerant charge conditions
- SPST, normally-closed
- Automatic reset

Service Valves
- Fully serviceable brass valves installed in discharge & liquid lines

FEATURES

LOW GWP REFRIGERANT DETECTION SYSTEM (RDS)

- Complies with UL 60335-2-40 approved standard
- Required for all systems using R-454B refrigerant
- Factory installed on all units
- Consists of a leak detection sensor(s) and a mitigation control
- Ensures safe operation for systems equipped with R-454B refrigerant
- Sensor(s) monitors indoor coil area for any refrigerant leaks if they occur
- If a leak is detected the refrigerant detection system will prevent compressor and heating operation until a leak is no longer detected
- Refrigeration detection system energizes blower while a leak is detected to mitigate any concentrations of refrigerant from the unit and the system

COMPRESSOR

Scroll Compressor

- High volumetric efficiency
- Uniform suction flow
- Constant discharge flow
- Quiet operation
- Low gas pulses during compression reduces operational sound levels
- Compressor motor is internally protected from excessive current and temperature
- Compressor is installed in the unit on resilient rubber mounts for vibration free operation

Scroll Compressor Operation

- Two involute spiral scrolls matched together generate a series of crescent-shaped gas pockets between them
- During compression, one scroll remains stationary while the other scroll orbits around it
- Gas is drawn into the outer pocket, the pocket is sealed as the scroll rotates
- As the spiral movement continues, gas pockets are pushed to the center of the scrolls. Volume between the pockets is simultaneously reduced
- When the pocket reaches the center, gas is now at high pressure and is forced out of a port located in the center of the fixed scrolls
- During compression, several pockets are compressed simultaneously resulting in a smooth continuous compression cycle
- Continuous flank contact, maintained by centrifugal force, minimizes gas leakage and maximizes efficiency
- Compressor is tolerant to the effects of slugging and contaminants. If this occurs, scrolls separate, allowing liquid or contaminants to be worked toward the center and discharged
- Muffler in discharge line reduces operating sound levels

Optional Accessories

Field Installed

Compressor Crankcase Heater

- Protects against refrigerant migration that can occur during low ambient operation

Compressor Timed-Off Control

- Prevents compressor short-cycling
- Allows time for suction and discharge pressure to equalize
- Permits compressor start-up in an unloaded condition
- Automatic reset
- Five minute delay between compressor shut-off and start-up

Freezestat

- Indoor coil freeze protection
- Senses suction line temperature
- Cycles compressor off when suction line temperature falls below its setpoint

Low Ambient Kit (40°F)

- Cycles the outdoor fan while allowing compressor operation in the cooling cycle
- This intermittent fan operation allows the system to operate without icing the evaporator coil and losing capacity
- Designed for use in ambient temperatures no lower than 40°F

NOTE - Crankcase heater and freezestat are recommended on compressor equipped with a low ambient kit.

FEATURES

CABINET

- Conditioned areas insulated with foil faced insulation to minimize heat loss and reduce operating sound levels
- Powder paint for maximum durability
- Full perimeter heavy-gauge galvanized steel base rails
- Base rails have rigging holes
- Two sides of the base rails have forklift slots
- Raised edges around duct and power entry openings in the bottom of the unit for water protection
- Easy service access
- Steel louvered panels provides complete coil protection

Airflow Choice
- Units are shipped with supply and return air duct covers installed for downflow or horizontal conversion

Electrical Inlets and Service Valves
- Field wiring inlets are located in one central area of the cabinet
- See dimension drawing
- Service valves with gauge ports are located inside the cabinet

Optional Accessories

Field Installed

Bottom Power Entry Kit
- Allows high and low voltage wiring connections through the unit base pan

Base Rail Openings Closure Kit
- Kit consists of panels and hardware to cover rigging holes and forklift slots in unit base rails

Rectangular to Round Duct Adaptor Kits
- Downflow or horizontal kits available
- Converts rectangular supply and return air openings on unit cabinet to round diameter
- Several sizes available

Tool-Less Filter Access Kit
- Converts blower access panel to two-piece deisgn
- One panel is equipped with tool-less latches for ease filter access without removing entire blower panel

NOTE - Tool-Less Filter Access Kit is not for seismic-rated applications.

CONTROLS

Refrigerant Detection System (RDS) Control
- Monitors leak detection sensor
- Connections for external RDS alarm system (not furnished)
- LED for power, monitoring and sensor status
- Test/Reset button for troubleshooting

24 Volt Transformer
- 70VA transformer furnished and factory installed in control area

Field Installed

Smoke Detector
- Photoelectric type
- Installed in supply air and/or return air ducts
- Available with one sensor or two sensors

BLOWER

- Direct drive blower
- Blower wheel is statically and dynamically balanced
- Resiliently mounted
- Blower assembly easily removed for servicing

Constant Torque Blower Motor
- DC Brushless Motor
- High Efficiency Constant Torque
- ECM (Electronically Commutated Motor)
- Motor is programmed to provide constant torque at each of the selectable speeds
- Fixed blower “On” delay prevents cold air from entering system during heating demand
- See Blower Performance tables

INDOOR AIR QUALITY

Air Filters
- Filter rack furnished as standard
- See Specifications Table for sizes

NOTE - Filters must be field provided.

FEATURES

ELECTRIC HEAT (5-23 KW)

Optional Accessories

Field Installed

- Field installed internal to unit cabinet
- Available in several voltages and kW sizes
- Helix wound nichrome heating elements exposed directly in air stream
- Instant heat transfer
- Low element temperatures and long service life
- Cutoff limit control provides positive protection in case of excessive temperatures
- Factory assembled with controls installed and wired

Single Point Power Supply Kits

- Control Box used with optional electric heat
- For single power supply connected to multi-circuit electric heat

NOTE - Side power entry only.

NOTE - If a Single Point Power Supply Kit is not used with unit + electric heat, a separate power source is required for electric heat (not furnished).

ECONOMIZER

Field Installed

Economizer
(Standard and High Performance Common Features)

- Convertible to downflow or horizontal
- Outdoor Air Hood is furnished
- Includes Barometric Relief Dampers with Exhaust Hood
- Barometric Relief Dampers allow relief of excess air,
- Aluminum blade dampers prevent blow back and outdoor air infiltration during off cycle
- Exhaust hood with bird screen furnished
- Single temperature control is furnished with Economizer
- Outdoor air sensor enables Economizer if the outdoor temperature is less than the setpoint of the control

Standard Economizer Features (Not for Title 24)

- Gear-driven action
- Return air and outdoor air dampers
- Plug-in connections to unit
- Nylon bearings
- Neoprene seals
- 24-volt
- Fully-modulating spring return motor

Standard Economizer Control Module
The Standard Economizer Control Module can be adjusted to operate based on outdoor air temperatures

Economizer Controls:

- Damper Minimum Position - Can be set lower than traditional minimum air requirements resulting in cost savings
- Free Cool LED - A steady green LED indicates outdoor air is suitable for free cooling

NOTE - Free Cooling runs when outdoor air temperature is lower than the set temperature on the economizer control.

NOTE: The Free Cooling default setting for outdoor air temperature sensor is 55°F.

High Performance Economizer Features

- Approved for California Title 24 building standards
- Low leakage dampers are Air Movement and Control Association International (AMCA) Class 1A Certified - Maximum 3 cfm per sq. ft. leakage at 1 in. w.g.
- ASHRAE 90.1-2010 compliant
- Gear-driven action
- High torque 24-volt fully-modulating spring return damper motor
- Return air and outdoor air dampers
- Plug-in connections to unit
- Stainless steel bearings
- Enhanced neoprene blade edge seals
- Flexible stainless steel jamb seals minimize air leakage

NOTE - High Performance Economizers are not approved for use with enthalpy controls in Title 24 applications.

NOTE - The Free Cooling setpoint for Title 24 applications must be set based on the Climate Zone where the system is installed. See Section 140.4 “Prescriptive Requirements for Space Conditioning Systems” of the California Energy Commission’s 2013 Building Energy Efficiency Standards. Refer to Installation Instructions for complete setup information and menu parameters available.

High Performance Economizer Control Module

- Module provides inputs and outputs to control economizer based on parameter settings
- Module automatically detects sensors by polling to determine which sensors are installed in system
- Module displays any alarm messages (fault detection and diagnostics) as an aid in troubleshooting
- Non-volatile memory retains parameter settings in case of power failure
- Keypad with four navigation buttons and LCD screen is furnished for setting economizer parameters
  - Menu Up/Exit button returns to the main menu
  - Arrow Up ▲ button moves to the previous or next parameter within the selected menu
  - Arrow Down ▼ button moves to the next parameter within the selected menu
  - Select (enter) ↵ button confirms parameter selection

ECONOMIZER (continued)

High Performance Economizer Control Module (continued)
Main Menu Structure:

- STATUS (economizer and system operation status)
- SETPOINTS (settings for various setpoint parameters)
- SYSTEM SETUP (settings/information about the system)
- ADVANCED SETUP (freeze protection, CO_2 settings, stage 3 delay, and additional calibration settings)
- CHECKOUT (damper positions)
- ALARMS (output signal that can be configured for remote alarm monitoring)

NOTE - Refer to Installation Instructions for complete setup information and menu parameters available.

Field Installed

Single Enthalpy Temperature Control (Not for Title 24)

- Outdoor air enthalpy sensor enables Economizer if the outdoor enthalpy is less than the setpoint of the control

OUTDOOR AIR

Field Installed

Outdoor Air Dampers - Downflow

- Single blade damper
- 0 to 25% (fixed) outdoor air adjustable
- Installs in unit
- Outdoor air hood is furnished
- Automatic model features fully modulating spring return damper motor with plug-in connection
- Manual model features a slide damper

NOTE - Maximum mixed air temperature in cooling mode is 100°F.

ROOF CURBS

Field Installed

Clip Curb (Full Perimeter)

- Interlocking tabs fasten corners together
- No tools required for assembly
- Fully gasketed around curb perimeter and supply and return openings
- Available in 8, 14, 18 and 24 inch heights
- Shipped knocked down

Adjustable Pitch Clip Curb (Full Perimeter)

- Fully adjustable pitch curb provides a level platform for packaged units
- Allows flexible installations on roofs with sloped or uneven angles
- Adjustable from 2/12 to 6/12 pitch
- Fully gasketed around curb perimeter and supply and return openings
- Shipped knocked down

All Curbs

- IBC 2018 compliant
- CBC 2019 compliant
- Seismic rating - SDS 2.0g, z/h=1, Ip=1.5
- Wind rating - 240 mph (Lateral), 214 mph (Uplift)
- Maximum load rating - 800 lbs.

Adaptor Curbs (not shown)

- Curbs are regionally sourced
- Dimensions vary based upon the source

NOTE - Contact your local sales representative for a detailed cut sheet with applicable dimensions.

Strapping Kit - Seismic

- Heavy-gauge galvanized steel
- Kit contains 4 brackets and mounting hardware

SPECIFICATIONS

Model		LRP13ACK36	LRP13ACK48	LRP13ACK60
Nominal Tonnage		3	4	5
Cooling Performance	Gross Cooling Capacity (Btuh)	35,200	47,500	58,000
	[1] Net Cooling Capacity - Btuh	34,000	45,500	56,000
	AHRI Rated Air Flow - cfm	1200	1650	1750
	[1] SEER2 (Buth/Watt)	13.4	13.4	13.4
	[1] EER2 (Buth/Watt)	10.6	10.6	10.6
	Total Unit Power - kW	3.2	3.83	4.86
Sound Rating Number	dBA	78	77	78
Refrigerant	Type	R-454B	R-454B	R-454B
	Charge	5 lbs. 6 oz.	5 lbs. 5 oz.	7 lbs. 13 oz.
Electric Heat Available		See Page 16		
Compressor Type (Number)		Scroll (1)	Scroll (1)	Scroll (1)
Outdoor Coil	Net face area - ft.^{2}	19.53	19.53	33.57
	Rows	1	1	2
	Fins - in.	26	26	22
Outdoor Coil Fan	Motor HP (number and type)	(1) 1/3 (1 PSC)	(1) 1/3 (1 PSC)	(1) 1/3 (1 PSC)
	Rpm	825	825	825
	Watts	280	280	280
	Diameter (Number) - in.	(1) 24	(1) 24	(1) 24
	Blades	3	3	3
Indoor Coil	Net face area - ft.^{2}	6.75	6.75	6.75
	Tube diameter - in.	5/16	5/16	3/8
	Rows	3	3	3
	Fins - in.	15	15	15
	Condensate drain size (NPT) - in.	(1) 3/4 in.		
	Expansion device type	Refrigerant Metering Orifice		
Indoor Blower	Motor HP (number and type)	0.75 HP (1 ECM)	1.0 HP (1 ECM)	1.0 HP (1 ECM)
	Wheel (Number) diameter x width - in.	(1) 12 x 9	(1) 12 x 9	(1) 12 x 10
[2] Filters	Type of filter	Disposable		
	Number and size - in.	(2) 20 x 20 x 1		
Line voltage data (Volts-Phase-Hz)		208/230-3-60 460-3-60		

NOTE - Net capacity includes evaporator blower motor heat deduction. Gross capacity does not include evaporator blower motor heat deduction.

[1] 1AHRI Certified to AHRI Standard 210/240: 95°F outdoor air temperature and 80°F db/67°F wb entering evaporator air; minimum external duct static pressure.

[2] Filters are not furnished and must be field provided.

OPTIONAL CONVENTIONAL TEMPERATURE CONTROL SYSTEMS

CS7500 Commercial 7-Day Programmable Thermostat

- Premium Universal Thermostat
- Full Color Touchscreen Interface
- Up To 4 Heat / 3 Cool
- Built-In Sensors For Temperature and Humidity
- Remote Sensors Options For Temperature, Discharge Air, Outdoor Air
- 5-2 or 7-Day Scheduling
- Smooth Setback Recovery
- Heat/Cool Auto-Changeover
- FDD, ASHRAE, IECC Compliant

CS3000 Commercial 5-2 Day Programmable Thermostat

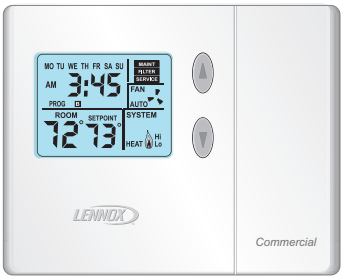

- Conventional Multi-Stage Thermostat
- Intuitive Display
- Push-Button Operation
- Up To 2 Heat / 2 Cool
- Built-In Temperature Sensor
- Remote Temperature Sensing
- Up to 5-2 Day Scheduling
- Smooth Setback Recovery
- Heat/Cool Auto-changeover

Description		Catalog No.
CS7500 Commercial 7-Day Programmable Thermostat		
CS7500 7-Day Thermostat		**24K41**
Sensors/ Accessories	[1] Remote non-adjustable wall-mount 20k	**47W36**
	[1] Remote non-adjustable wall-mount 10k	**47W37**
	Remote non-adjustable discharge air (duct mount)	**19L22**
	Outdoor temperature sensor	**X2658**
CS3000 5-2 Day Programmable Thermostat		
CS3000 5-2 Day Thermostat		**11Y05**
Sensor/ Accessories	Remote non-adjustable wall mount 10k averaging	**47W37**
	Thermostat wall mounting plate	**X2659**
Universal Thermostat Guard with Lock (clear)		
	Inside Dimensions (H x W x D) 5-7/8 x 8-3/8 x 3 in.	**39P21**

[1] Remote wall-mount sensors can be applied in any of the following combinations:
One Sensor - (1) 47W36
Two Sensors - (2) 47W37
Three Sensors - (2) 47W36 and (1) 47W37
Four Sensors - (4) 47W36
Five Sensors - (3) 47W36 and (2) 47W37

OPTIONS / ACCESSORIES

Item		Order Number	Size 36	Size 48	Size 60
COOLING SYSTEM					
Compressor Crankcase Heater	208/230V-3ph	**11X27**	X	X	X
	460V-3ph	**21D21**	X	X	X
Compressor Timed-Off Control		**47J27**	X	X	X
Freezestat		**21D23**	X	X	X
Low Ambient Kit (40°F)		**21D20**	X	X	X
CABINET					
Base Rail Openings Closure Kit		**21J84**	X	X	X
Rectangular to Round Duct Adaptor Kits	Downflow - 14 in. dia.	**21D26**	X	X	X
	Horizontal - 14 in. dia.	**21D24**	X	X	X
	- 16 in. dia.	**22U78**	X	X	X
	- 18 in. dia.	**22U79**	X	X	X
[1] Tool-Less Filter Access Kit		**21J80**	X	X	X
CONTROLS					
Smoke Detector - Supply or Return (one sensor)		**21U21**	X	X	X
Smoke Detector - Supply and Return (two sensors)		**21U22**	X	X	X
ELECTRICAL					
Bottom Power Entry Kit		**21J78**	X	X	X
[2] ELECTRIC HEAT					
5 kW	208/230V-3ph	**21J30**	X	X	X
	460V-3ph	**21J37**	X	X	X
10 kW	208/230V-3ph	**21J33**	X	X	X
	460V-3ph	**21J38**	X	X	X
15 kW	208/230V-3ph	**21J34**	X	X	X
	460V-3ph	**21J39**	X	X	X
20 kW	208/230V-3ph	**21J35**		X	X
	460V-3ph	**21J40**		X	X
23 kW	208/230V-3ph	**21J36**			X
	460V-3ph	**21J41**			X
[2] SINGLE POINT POWER SUPPLY KITS (FOR ELECTRIC HEAT) - SIDE POWER ENTRY ONLY					
	208/230V-3ph	**28X19**	X	X	X
	460V-3ph	**29X63**	X	X	X
ECONOMIZER					
Standard Economizer With Outdoor Air Hood (Not for Title 24)					
Downflow or Horizontal (Includes Barometric Relief Dampers and Exhaust Hood)		**21U15**	X	X	X
High Performance Economizer With Outdoor Air Hood (Approved for California Title 24 Building Standards / AMCA Class 1A Certified)					
Downflow or Horizontal (Includes Barometric Relief Dampers and Exhaust Hood)		**21U17**	X	X	X
Economizer Controls					
Single Enthalpy Control (Standard)		**21Z09**	X	X	X
Single Enthalpy Control (High Performance)		**11G21**	X	X	X

[1] Not for seismic-rated applications.
[2] If a Single Point Power Supply Kit is not used with unit + electric heat, a separate power source is required for electric heat (not furnished).

X = Field Installed

OPTIONS / ACCESSORIES

Item	Order Number	Size		
		36	48	60
OUTDOOR AIR				
Outdoor Air Dampers With Outdoor Air Hood				
Motorized	**21U19**	X	X	X
Manual	**21U20**	X	X	X
ROOF CURBS				
Clip Curbs				
8 in height	**21J17**	X	X	X
14 in height	**21J19**	X	X	X
18 in height	**21J20**	X	X	X
24 in height	**21J25**	X	X	X
Adjustable Pitch Clip Curb				
14 in height	**21U04**	X	X	X
Strapping Kits for Roof Curbs				
Strapping Kit - Seismic	**21J75**	X	X	X

X = Field Installed

RATINGS

NOTE - For Temperatures and Capacities not shown in tables, see bulletin - Cooling Unit Rating Table Correction Factor Data in Miscellaneous Product Data section.

3 TON - LRP13ACK36

Entering Wet Bulb Temperature	Total Air Volume	Outdoor Air Temperature Entering Outdoor Coil																			
		85°F					95°F					105°F					115°F				
		Total Cool Cap.	Comp. Motor Input	Sensible To Total Ratio (S/T) Dry Bulb			Total Cool Cap.	Comp. Motor Input	Sensible To Total Ratio (S/T) Dry Bulb			Total Cool Cap.	Comp. Motor Input	Sensible To Total Ratio (S/T) Dry Bulb			Total Cool Cap.	Comp. Motor Input	Sensible To Total Ratio (S/T) Dry Bulb		
	cfm	kBtuh	kW	75°F	80°F	85°F	kBtuh	kW	75°F	80°F	85°F	kBtuh	kW	75°F	80°F	85°F	kBtuh	kW	75°F	80°F	85°F
59°F	1000	35.6	2.27	0.91	1.00	1.00	34.2	2.58	0.93	1.00	1.00	33.0	2.91	0.95	1.00	1.00	31.8	3.29	0.97	1.00	1.00
	1200	37.8	2.28	0.96	1.00	1.00	36.4	2.58	0.98	1.00	1.00	35.0	2.93	1.00	1.00	1.00	33.6	3.30	1.00	1.00	1.00
	1400	39.5	2.29	1.00	1.00	1.00	38.0	2.59	1.00	1.00	1.00	36.6	2.93	1.00	1.00	1.00	34.8	3.31	1.00	1.00	1.00
63°F	1000	37.2	2.28	0.74	0.88	0.99	35.6	2.58	0.76	0.90	1.00	34.0	2.92	0.78	0.92	1.00	32.4	3.30	0.80	0.94	1.00
	1200	38.5	2.28	0.80	0.94	1.00	37.0	2.59	0.80	0.96	1.00	35.4	2.93	0.82	0.98	1.00	33.8	3.30	0.85	1.00	1.00
	1400	40.0	2.29	0.83	0.98	1.00	38.5	2.59	0.85	1.00	1.00	36.6	2.93	0.87	1.00	1.00	35.0	3.31	0.90	1.00	1.00
67°F	1000	39.5	2.29	0.61	0.73	0.84	37.8	2.59	0.61	0.73	0.87	36.0	2.93	0.62	0.76	0.89	34.2	3.31	0.63	0.78	0.91
	1200	41.0	2.29	0.64	0.77	0.91	39.0	2.59	0.64	0.79	0.93	37.4	2.94	0.65	0.81	0.95	35.4	3.31	0.67	0.83	0.97
	1400	42.0	2.29	0.67	0.82	0.96	40.5	2.60	0.68	0.83	0.98	38.5	2.94	0.69	0.86	1.00	36.4	3.32	0.70	0.88	1.00
71°F	1000	41.5	2.29	0.48	0.60	0.70	39.5	2.60	0.48	0.61	0.72	38.0	2.94	0.49	0.61	0.73	36.2	3.32	0.48	0.61	0.75
	1200	43.0	2.30	0.49	0.63	0.76	41.0	2.60	0.50	0.64	0.77	39.5	2.95	0.51	0.65	0.79	37.4	3.33	0.51	0.65	0.81
	1400	44.5	2.30	0.51	0.66	0.80	42.5	2.61	0.51	0.67	0.81	40.5	2.95	0.51	0.68	0.84	38.5	3.33	0.52	0.70	0.87

4 TON - LRP13ACK48

Entering Wet Bulb Temperature	Total Air Volume	Outdoor Air Temperature Entering Outdoor Coil																			
		85°F					95°F					105°F					115°F				
		Total Cool Cap.	Comp. Motor Input	Sensible To Total Ratio (S/T) Dry Bulb			Total Cool Cap.	Comp. Motor Input	Sensible To Total Ratio (S/T) Dry Bulb			Total Cool Cap.	Comp. Motor Input	Sensible To Total Ratio (S/T) Dry Bulb			Total Cool Cap.	Comp. Motor Input	Sensible To Total Ratio (S/T) Dry Bulb		
	cfm	kBtuh	kW	75°F	80°F	85°F	kBtuh	kW	75°F	80°F	85°F	kBtuh	kW	75°F	80°F	85°F	kBtuh	kW	75°F	80°F	85°F
59°F	1300	43.5	2.59	0.94	1.00	1.00	42.0	2.96	0.96	1.00	1.00	40.5	3.37	0.98	1.00	1.00	38.5	3.84	1.00	1.00	1.00
	1600	46.0	2.60	1.00	1.00	1.00	44.5	2.97	1.00	1.00	1.00	42.5	3.39	1.00	1.00	1.00	40.5	3.85	1.00	1.00	1.00
	1900	48.0	2.62	1.00	1.00	1.00	46.5	2.99	1.00	1.00	1.00	44.5	3.40	1.00	1.00	1.00	42.5	3.86	1.00	1.00	1.00
63°F	1300	45.0	2.60	0.77	0.91	1.00	43.5	2.97	0.79	0.92	1.00	41.0	3.38	0.80	0.95	1.00	39.0	3.85	0.83	0.98	1.00
	1600	47.0	2.61	0.83	0.98	1.00	45.0	2.98	0.84	1.00	1.00	43.0	3.39	0.86	1.00	1.00	41.0	3.86	0.89	1.00	1.00
	1900	48.0	2.62	0.88	1.00	1.00	46.5	2.99	0.90	1.00	1.00	45.0	3.40	0.92	1.00	1.00	42.5	3.86	0.95	1.00	1.00
67°F	1300	47.5	2.61	0.63	0.75	0.88	45.5	2.98	0.63	0.77	0.90	43.5	3.39	0.64	0.79	0.92	41.0	3.86	0.66	0.81	0.95
	1600	49.5	2.62	0.66	0.81	0.95	47.5	2.99	0.67	0.83	0.97	45.0	3.40	0.69	0.85	1.00	43.0	3.86	0.70	0.87	1.00
	1900	51.0	2.63	0.70	0.86	1.00	49.0	3.00	0.71	0.88	1.00	46.5	3.40	0.72	0.91	1.00	44.0	3.87	0.75	0.93	1.00
71°F	1300	50.0	2.62	0.48	0.61	0.73	48.0	2.99	0.49	0.62	0.75	46.0	3.40	0.49	0.63	0.77	43.5	3.86	0.50	0.65	0.79
	1600	52.0	2.63	0.51	0.65	0.79	50.0	3.00	0.51	0.66	0.81	47.5	3.41	0.52	0.68	0.83	45.0	3.87	0.53	0.70	0.86
	1900	53.5	2.63	0.53	0.69	0.85	51.0	3.00	0.54	0.70	0.87	48.5	3.41	0.54	0.72	0.89	46.0	3.87	0.56	0.74	0.92

5 TON - LRP13ACK60

Entering Wet Bulb Temperature	Total Air Volume	Outdoor Air Temperature Entering Outdoor Coil																			
		85°F					95°F					105°F					115°F				
		Total Cool Cap.	Comp. Motor Input	Sensible To Total Ratio (S/T) Dry Bulb			Total Cool Cap.	Comp. Motor Input	Sensible To Total Ratio (S/T) Dry Bulb			Total Cool Cap.	Comp. Motor Input	Sensible To Total Ratio (S/T) Dry Bulb			Total Cool Cap.	Comp. Motor Input	Sensible To Total Ratio (S/T) Dry Bulb		
	cfm	kBtuh	kW	75°F	80°F	85°F	kBtuh	kW	75°F	80°F	85°F	kBtuh	kW	75°F	80°F	85°F	kBtuh	kW	75°F	80°F	85°F
59°F	1450	55.5	3.47	0.89	1.00	1.00	54.0	3.92	0.91	1.00	1.00	51.5	4.43	0.93	1.00	1.00	49.5	5.02	0.95	1.00	1.00
	1800	60.0	3.49	0.96	1.00	1.00	57.5	3.95	0.98	1.00	1.00	55.0	4.46	1.00	1.00	1.00	53.0	5.06	1.00	1.00	1.00
	2100	62.5	3.50	1.00	1.00	1.00	60.0	3.96	1.00	1.00	1.00	58.0	4.48	1.00	1.00	1.00	55.0	5.08	1.00	1.00	1.00
63°F	1450	58.5	3.49	0.74	0.86	0.98	56.5	3.94	0.76	0.88	1.00	54.0	4.44	0.77	0.90	1.00	51.0	5.03	0.79	0.93	1.00
	1800	61.5	3.50	0.79	0.93	1.00	58.5	3.95	0.81	0.95	1.00	56.0	4.47	0.82	0.98	1.00	53.5	5.06	0.85	1.00	1.00
	2100	63.5	3.51	0.83	0.98	1.00	60.5	3.96	0.85	1.00	1.00	57.5	4.48	0.87	1.00	1.00	55.5	5.08	0.90	1.00	1.00
67°F	1450	61.5	3.50	0.60	0.72	0.83	59.5	3.96	0.61	0.73	0.85	56.5	4.47	0.62	0.75	0.87	53.5	5.06	0.63	0.77	0.89
	1800	65.0	3.51	0.64	0.77	0.90	61.5	3.97	0.65	0.79	0.92	59.5	4.49	0.66	0.81	0.95	56.0	5.09	0.67	0.83	0.98
	2100	66.5	3.52	0.67	0.81	0.96	64.0	3.98	0.68	0.83	0.99	60.5	4.50	0.69	0.86	1.00	57.5	5.10	0.71	0.88	1.00
71°F	1450	65.0	3.51	0.47	0.59	0.70	62.5	3.97	0.48	0.60	0.71	59.5	4.49	0.48	0.61	0.73	56.5	5.09	0.49	0.62	0.75
	1800	67.5	3.52	0.49	0.63	0.75	65.5	3.99	0.50	0.64	0.77	62.0	4.51	0.50	0.65	0.79	59.0	5.12	0.52	0.67	0.81
	2100	69.5	3.53	0.51	0.66	0.80	67.0	4.00	0.52	0.67	0.82	63.5	4.52	0.53	0.69	0.84	60.5	5.13	0.54	0.71	0.86

BLOWER DATA

LRP13ACK36

Blower Tap		External Static (in.w.g.)									
		0.1	**0.2**	**0.3**	**0.4**	**0.5**	**0.6**	**0.7**	**0.8**	**0.9**	**1.0**
Tap 1 (Fan Only)	CFM	923	848	748	631	541	474	405	342	- - -	- - -
	RPM	443	496	560	623	667	707	748	788	- - -	- - -
	Watts	84	91	100	108	114	119	125	131	- - -	- - -
Tap 2 (Low Cooling)	CFM	1488	1429	1371	1312	1250	1175	1110	1038	952	881
	RPM	676	704	734	763	794	836	873	911	951	982
	Watts	259	266	275	283	292	305	317	328	340	350
Tap 3 (High Cooling)	CFM	1663	1612	1567	1518	1476	1424	1376	1316	1262	1193
	RPM	671	701	728	762	789	823	855	893	931	971
	Watts	322	333	343	355	366	379	390	405	419	435
[1] Tap 4 (Low Electric Heat)	CFM	1488	1429	1371	1312	1250	1175	1110	1038	952	881
	RPM	676	704	734	763	794	836	873	911	951	982
	Watts	259	266	275	283	292	305	317	328	340	350
[1] Tap 5 (High Electric Heat)	CFM	1663	1612	1567	1518	1476	1424	1376	1316	1262	1193
	RPM	671	701	728	762	789	823	855	893	931	971
	Watts	322	333	343	355	366	379	390	405	419	435

NOTE - All air data is measured external to unit with dry coil and without air filters.

[1] Taps 4 and 5 are used with Optional Electric Heat. Refer to Electric Heat nameplate for proper heat tap selection.

BLOWER DATA

LRP13ACK48

Blower Tap		External Static (in.w.g.)									
		0.1	**0.2**	**0.3**	**0.4**	**0.5**	**0.6**	**0.7**	**0.8**	**0.9**	**1.0**
Tap 1 (Fan Only)	CFM	1301	1175	1053	987	904	817	715	637	579	530
	RPM	574	584	607	647	699	749	804	845	876	909
	Watts	193	177	170	177	188	197	210	218	224	231
Tap 2 (Low Cooling)	CFM	1875	1830	1782	1734	1686	1638	1588	1536	1482	1426
	RPM	768	796	823	850	877	903	929	954	982	1011
	Watts	428	441	454	467	480	492	504	516	529	543
Tap 3 (High Cooling)	CFM	1961	1919	1877	1838	1800	1759	1716	1676	1635	1595
	RPM	791	817	840	868	890	916	942	968	993	1020
	Watts	472	486	498	512	523	537	550	565	577	591
[1] Tap 4 (Low Electric Heat)	CFM	1875	1830	1782	1734	1686	1638	1588	1536	1482	1426
	RPM	768	796	823	850	877	903	929	954	982	1011
	Watts	428	441	454	467	480	492	504	516	529	543
[1] Tap 5 (High Electric Heat)	CFM	1961	1919	1877	1838	1800	1759	1716	1676	1635	1595
	RPM	791	817	840	868	890	916	942	968	993	1020
	Watts	472	486	498	512	523	537	550	565	577	591

NOTE - All air data is measured external to unit with dry coil and without air filters.

[1] Taps 4 and 5 are used with Optional Electric Heat. Refer to Electric Heat nameplate for proper heat tap selection.

BLOWER DATA

LRP13ACK60

Blower Tap		External Static (in.w.g.)									
		0.1	0.2	0.3	0.4	0.5	0.6	0.7	0.8	0.9	1.0
Tap 1 (Fan Only)	CFM	1401	1339	1285	1231	1177	1114	1041	978	886	811
	RPM	595	628	658	694	729	774	817	867	922	969
	Watts	212	221	227	237	246	258	269	282	297	308
Tap 2 (Low Cooling)	CFM	1974	1926	1880	1840	1798	1756	1718	1676	1638	1596
	RPM	788	812	837	858	878	900	926	954	980	1011
	Watts	505	514	526	537	547	556	571	584	597	611
Tap 3 (High Cooling)	CFM	2337	2302	2263	2226	2182	2147	2107	2072	2038	1992
	RPM	913	931	953	971	992	1010	1032	1044	1069	1090
	Watts	816	829	842	854	868	878	894	900	915	919
[1] Tap 4 (Low Electric Heat)	CFM	1974	1926	1880	1840	1798	1756	1718	1676	1638	1596
	RPM	788	812	837	858	878	900	926	954	980	1011
	Watts	505	514	526	537	547	556	571	584	597	611
[1] Tap 5 (High Electric Heat)	CFM	2337	2302	2263	2226	2182	2147	2107	2072	2038	1992
	RPM	913	931	953	971	992	1010	1032	1044	1069	1090
	Watts	816	829	842	854	868	878	894	900	915	919

NOTE - All air data is measured external to unit with dry coil and without air filters.

[1] Taps 4 and 5 are used with Optional Electric Heat. Refer to Electric Heat nameplate for proper heat tap selection.

AIR RESISTANCE DATA - in. w.g.

Air Volume cfm	Wet Indoor Coil			Optional Economizer	Rectangular to Round Duct Adaptor Kits					
					Downflow		Horizontal			
					14 in. Diameter		14 in. Diameter		16 in. Diameter	18 in. Diameter
	36	48	60		36	48, 60	36	48, 60	36, 48, 60	36, 48, 60
600	0.01	0.01	- - -	0.02	0.05	- - -	0.07	- - -	- - -	- - -
700	0.01	0.01	0.01	0.03	0.08	0.13	0.08	0.13	- - -	- - -
800	0.01	0.01	0.01	0.04	0.10	0.17	0.12	0.16	- - -	- - -
900	0.02	0.01	0.01	0.05	0.12	0.21	0.15	0.21	- - -	- - -
1000	0.02	0.02	0.02	0.06	0.17	0.24	0.19	0.25	0.11	0.03
1100	0.02	0.02	0.02	0.07	0.18	0.30	0.23	0.30	0.11	0.03
1200	0.03	0.02	0.02	0.08	0.20	0.36	0.29	0.37	0.13	0.03
1300	0.03	0.03	0.03	0.10	0.26	0.43	0.31	0.43	0.17	0.03
1400	0.04	0.03	0.03	0.12	0.31	0.50	0.39	0.51	0.20	0.03
1500	0.05	0.04	0.03	0.13	- - -	0.57	- - -	0.57	0.21	0.05
1600	0.05	0.05	0.03	0.15	- - -	0.63	- - -	0.65	0.26	0.05
1700	0.05	0.05	0.04	0.18	- - -	0.71	- - -	0.72	0.30	0.06
1800	0.06	0.05	0.04	0.20	- - -	0.80	- - -	0.81	0.30	0.06
1900	0.06	0.06	0.04	0.21	- - -	0.91	- - -	0.90	0.40	0.06
2000	0.07	0.06	0.05	0.24	- - -	0.99	- - -	1.01	0.41	0.06

NOTE - Optional Electric Heat has no appreciable air resistance.

ELECTRICAL/ELECTRIC HEAT DATA — 3 TON

Model		LRP13ACK36	
[1] **Voltage - 60Hz**		**208/230V-3ph**	**460V-3ph**
Compressor (Non-Inverter)	Rated Load Amps	12.2	5.8
	Locked Rotor Amps	102.8	50
Outdoor Fan Motor	Full Load Amps (1 Non-ECM)	1.8	1
Indoor Blower Motor	Horsepower	0.75	0.75
	Type	ECM	ECM
	Full Load Amps	2.4	3.2
[2] Maximum Overcurrent Protection (MOCP)	Unit Only	30	15
[3] Minimum Circuit Ampacity (MCA)	Unit Only	21	11.9

ELECTRIC HEAT DATA (Electric Heat Only)

Electric Heat Voltage				208V	240V	480V
[2] Maximum Overcurrent Protection (MOCP)		Electric Heat	**5 kW**	20	20	15
			10 kW	30	35	20
			15 kW	45	50	30
[3] Minimum Circuit Ampacity (MCA)		Electric Heat	**5 kW**	16	18	11.5
			10 kW	29.1	33.1	19
			15 kW	42.1	48.1	26.6
Single Point Power Source	[2] Maximum Overcurrent Protection (MOCP)	Electric Heat	**5 kW**	30	30	15
			10 kW	30	35	20
			15 kW	45	50	30
	[3] Minimum Circuit Ampacity (MCA)	Electric Heat	**5 kW**	30	30	15
			10 kW	30	35	20
			15 kW	45	50	30

NOTE - All units have a minimum Short Circuit Current Rating (SCCR) of 5000 amps.

NOTE - Field wiring for electric heat is separate from the unit power supply. A second, separate power source is required.

[1] Extremes of operating range are plus and minus 10% of line voltage.

[2] HACR type breaker or fuse.

[3] Refer to National or Canadian Electrical Code manual to determine wire, fuse and disconnect size requirements.

ELECTRICAL/ELECTRIC HEAT DATA — 4 TON

Model		LRP13ACK48	
[1] Voltage - 60Hz		208/230V-3ph	460V-3ph
Compressor (Non-Inverter)	Rated Load Amps	12.2	5.1
	Locked Rotor Amps	120.4	41
Outdoor Fan Motor	Full Load Amps (1 Non-ECM)	1.8	1
Indoor Blower Motor	Horsepower	1.0	1.0
	Type	ECM	ECM
	Full Load Amps	7.6	4
[2] Maximum Overcurrent Protection (MOCP)	Unit Only	35	15
[3] Minimum Circuit Ampacity (MCA)	Unit Only	26.2	11.9

ELECTRIC HEAT DATA (Electric Heat Only)

Electric Heat Voltage				208V	240V	480V
[2] Maximum Overcurrent Protection (MOCP)		Electric Heat	**5 kW**	25	25	15
			10 kW	40	40	25
			15 kW	50	60	30
			20 kW	80	90	45
[3] Minimum Circuit Ampacity (MCA)		Electric Heat	**5 kW**	22.5	24.5	12.5
			10 kW	35.6	39.6	20
			15 kW	48.6	54.6	27.6
			20 kW	71.2	80.6	40.6
Single Point Power Source	[2] Maximum Overcurrent Protection (MOCP)	Electric Heat	**5 kW**	35	35	15
			10 kW	40	40	25
			15 kW	50	60	30
			20 kW	80	90	45
	[3] Minimum Circuit Ampacity (MCA)	Electric Heat	**5 kW**	26.2	26.2	12.52
			10 kW	35.6	39.6	20.04
			15 kW	48.6	54.6	27.55
			20 kW	71.2	80.6	40.57

NOTE - All units have a minimum Short Circuit Current Rating (SCCR) of 5000 amps.

NOTE - Field wiring for electric heat is separate from the unit power supply. A second, separate power source is required.

[1] Extremes of operating range are plus and minus 10% of line voltage.

[2] HACR type breaker or fuse.

[3] Refer to National or Canadian Electrical Code manual to determine wire, fuse and disconnect size requirements.

ELECTRICAL/ELECTRIC HEAT DATA — 5 TON

Model		LRP13ACK60	
[1] Voltage - 60Hz		208/230V-3ph	460V-3ph
Compressor (Non-Inverter)	Rated Load Amps	13.1	6.6
	Locked Rotor Amps	93	60
Outdoor Fan Motor	Full Load Amps (1 Non-ECM)	1.8	1
Indoor Blower Motor	Horsepower	1.0	1.0
	Type	ECM	ECM
	Full Load Amps	7.6	4
[2] Maximum Overcurrent Protection (MOCP)	Unit Only	35	15
[3] Minimum Circuit Ampacity (MCA)	Unit Only	27.3	13.7

ELECTRIC HEAT DATA (Electric Heat Only)

Electric Heat Voltage				208V	240V	480V
[2] Maximum Overcurrent Protection (MOCP)		Electric Heat	**5 kW**	25	25	15
			10 kW	40	40	25
			15 kW	50	60	30
			20 kW	80	90	45
			23 kW	90	100	50
[3] Minimum Circuit Ampacity (MCA)		Electric Heat	**5 kW**	22.5	24.5	12.5
			10 kW	35.6	39.6	20
			15 kW	48.6	54.6	27.6
			20 kW	71.2	80.6	40.6
			23 kW	80.4	91.3	45.9
Single Point Power Source	[2] Maximum Overcurrent Protection (MOCP)	Electric Heat	**5 kW**	35	35	20
			10 kW	40	40	25
			15 kW	50	60	30
			20 kW	80	90	45
			23 kW	90	100	50
	[3] Minimum Circuit Ampacity (MCA)	Electric Heat	**5 kW**	27.3	27.3	13.74
			10 kW	35.6	39.6	20.04
			15 kW	48.6	54.6	27.55
			20 kW	71.2	80.6	40.57
			23 kW	80.4	91.3	45.91

NOTE - All units have a minimum Short Circuit Current Rating (SCCR) of 5000 amps.

NOTE - Field wiring for electric heat is separate from the unit power supply. A second, separate power source is required.

[1] Extremes of operating range are plus and minus 10% of line voltage.

[2] HACR type breaker or fuse.

[3] Refer to National or Canadian Electrical Code manual to determine wire, fuse and disconnect size requirements.

ELECTRIC HEAT CAPACITIES

Input Voltage	5 kW			10 kW			15 kW			20 kW			23 kW		
	No of Stages	kW input	Btuh Output	No of Stages	kW input	Btuh Output	No of Stages	kW input	Btuh Output	No of Stages	kW input	Btuh Output	No of Stages	kW input	Btuh Output
208	1	3.8	12,800	1	7.5	25,600	1	11.2	38,400	1	17.3	59,100	1	19.9	68,000
220	1	4.2	14,300	1	8.4	28,700	1	12.6	43,000	1	18.3	62,600	1	21.1	71,900
230	1	4.6	15,700	1	9.2	31,400	1	13.8	47,000	1	19.2	65,400	1	22.0	75,200
240	1	5.0	17,100	1	10.0	34,200	1	15.0	51,200	1	20.0	68,200	1	23.0	78,500
440	1	4.2	14,300	1	8.4	28,700	1	12.6	43,000	1	18.3	62,600	1	21.1	71,900
460	1	4.6	15,700	1	9.2	31,400	1	13.8	47,000	1	19.2	65,400	1	22.0	75,200
480	1	5.0	17,100	1	10.0	34,200	1	15.0	51,200	1	20.0	68,200	1	23.0	78,500

WEIGHT DATA — UNIT

Model	Net		Shipping	
	lbs.	kg	lbs.	kg
LRP13ACK36	466	211	476	216
LRP13ACK48	510	231	520	236
LRP13ACK60	528	239	538	244

WEIGHT DATA — OPTIONS / ACCESSORIES

Description	Shipping	
	lbs.	kg
CABINET		
Tool-Less Filter Access Kit	20	9
ECONOMIZER / OUTDOOR AIR		
Economizer		
Economizer, Includes Barometric Relief Dampers and Exhaust Hood	95	43
Outdoor Air Dampers		
Motorized	35	16
Manual	28	13
ELECTRIC HEAT		
5 kW	6	3
7.5 kW	7	3
10 kW	8	4
15 kW	8	4
20 kW	8	4
23 kW	9	4
ROOF CURBS		
Clip Curbs		
8 in. height	63	29
14 in. height	77	35
18 in. height	99	45
24 in. height	132	60
Adjustable Pitch Curb, Downflow		
14 in. height	95	43

INSTALLATION CLEARANCES

	in.	mm
Front	24	610
Right Side (blower and evaporator coil access)	24	610
Left Side (compressor access)	24	610
Back	0	0
Back (with Optional Economizer)	40	1016
Top	48	1219

DIMENSIONS UNIT

Model	CORNER WEIGHTS								CENTER OF GRAVITY			
	AA		BB		CC		DD		EE		FF	
	lbs.	kg	lbs.	kg	lbs.	kg	lbs.	kg	in.	mm	in.	mm
LRP13ACK36	107	49	117	53	126	57	116	53	25.25	641	21.50	546
LRP13ACK48	117	53	128	58	138	63	127	58	25.25	641	21.50	546
LRP13ACK60	121	55	132	60	143	65	132	60	25.25	641	21.50	546

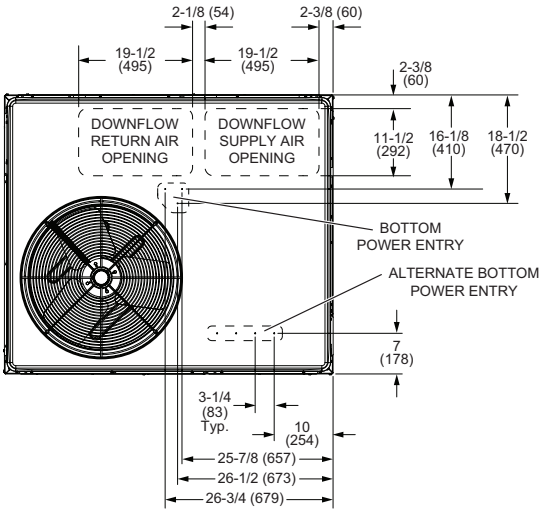

TOP VIEW (Base)

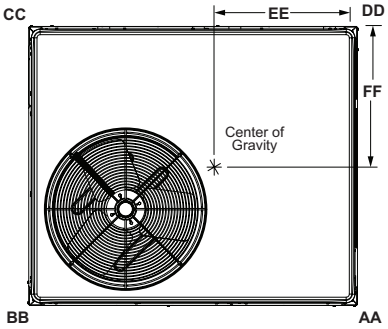

TOP VIEW
(Corner Weight and Center of Gravity)

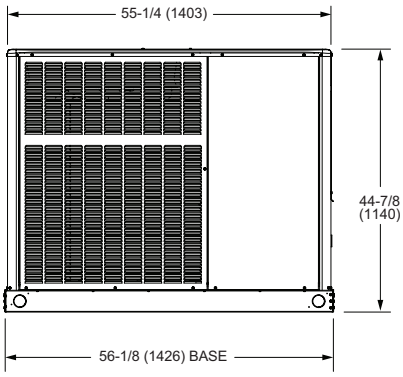

FRONT VIEW

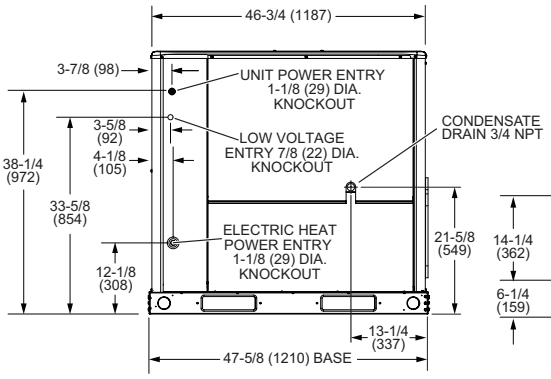

RIGHT SIDE VIEW

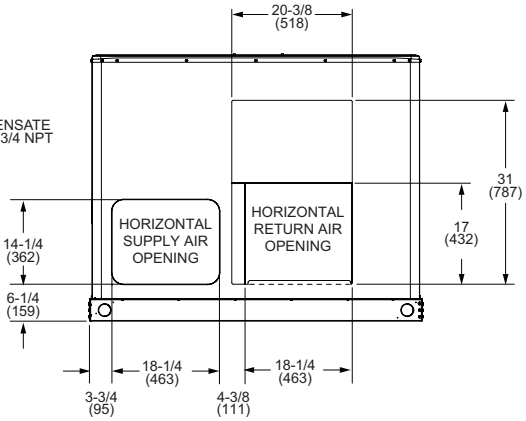

BACK VIEW

OUTDOOR AIR HOOD DETAIL FOR OPTIONAL ECONOMIZER WITH BAROMETRIC RELIEF DAMPERS
(Downflow Applications)

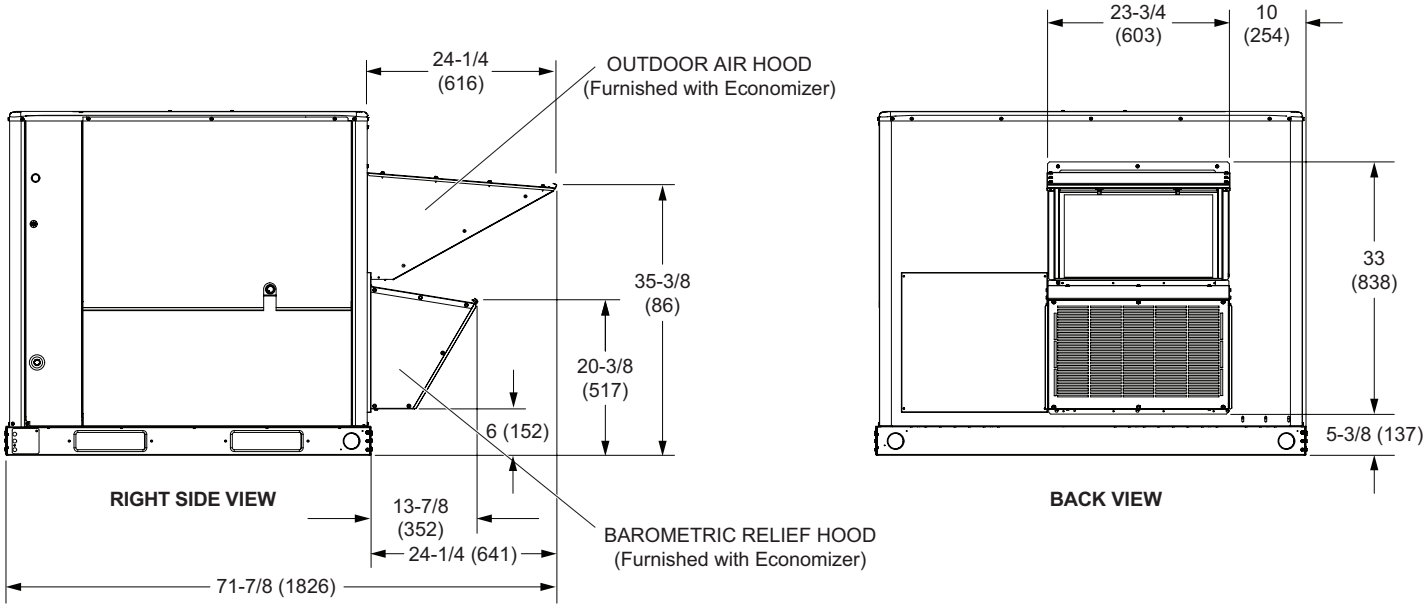

OUTDOOR AIR HOOD DETAIL FOR OPTIONAL ECONOMIZER WITH BAROMETRIC RELIEF DAMPERS
(Horizontal Applications)

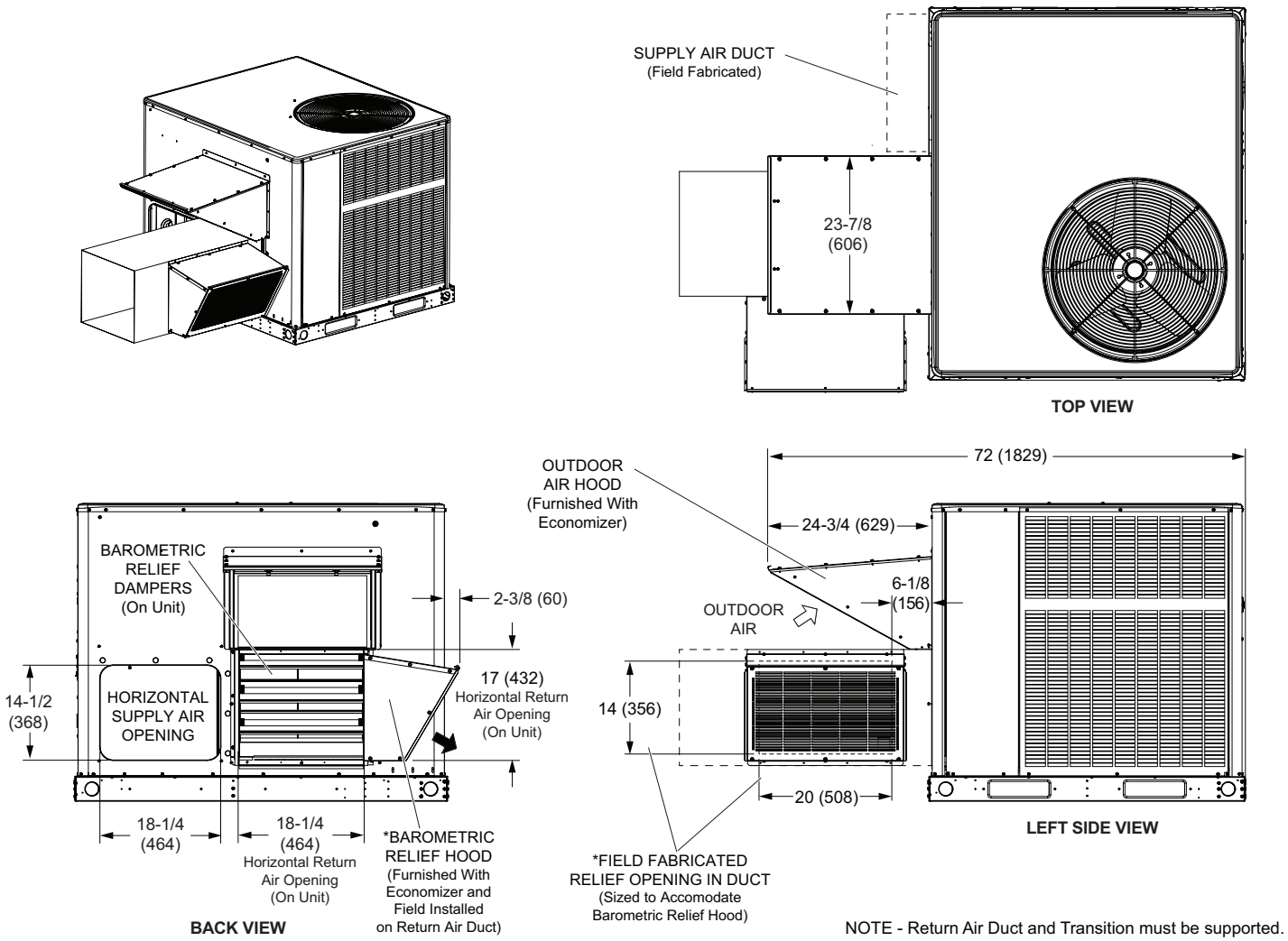

NOTE - Return Air Duct and Transition must be supported.

OUTDOOR AIR HOOD DETAIL FOR OPTIONAL OUTDOOR AIR DAMPERS

MANUAL OUTDOOR AIR DAMPERS

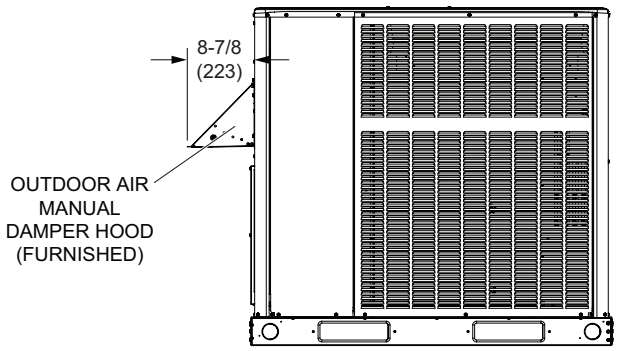

LEFT SIDE VIEW

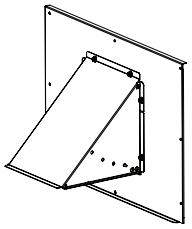

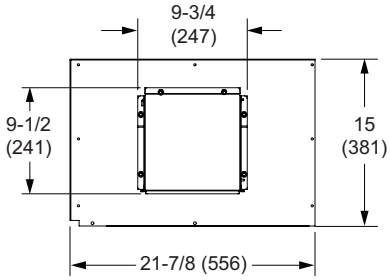

MOTORIZED OUTDOOR AIR DAMPERS

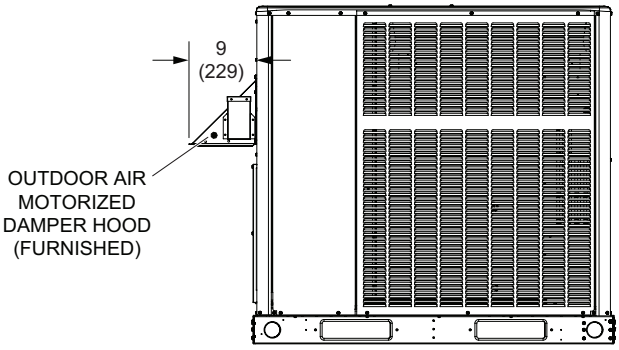

LEFT SIDE VIEW

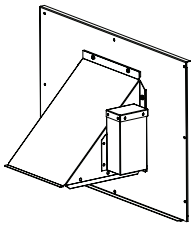

NOTE - Outdoor Air Hood and Panel replaces existing panel on unit.

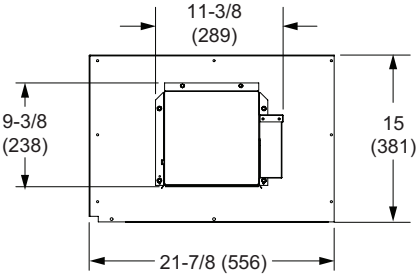

CLIP CURB

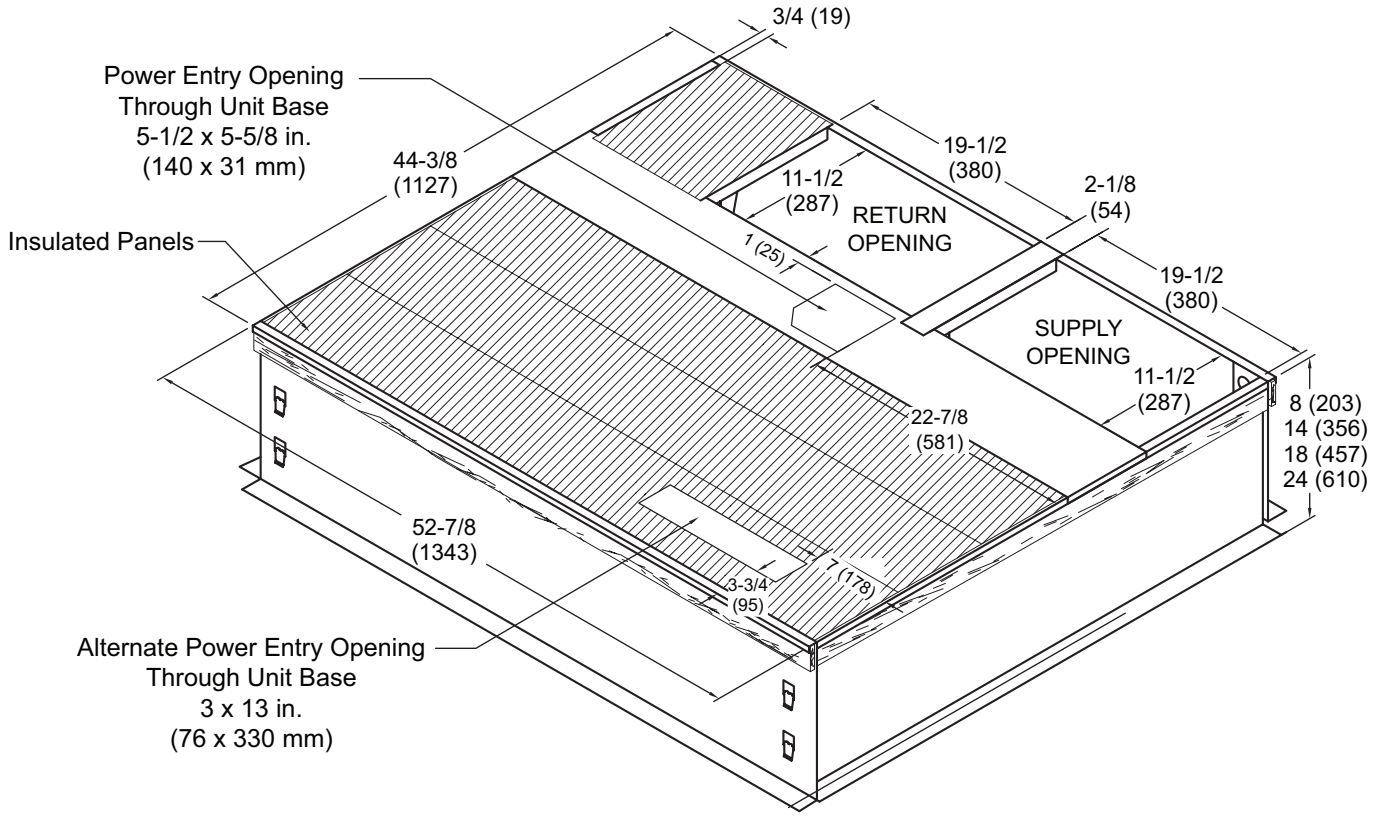

NOTE - Roof deck may be omitted within confines of curb.

TYPICAL FLASHING DETAIL FOR ROOF CURB

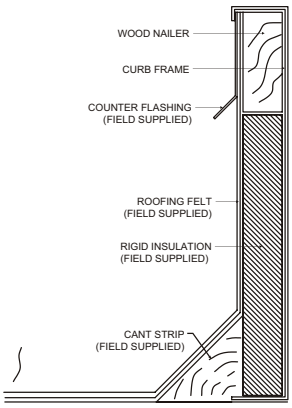

DETAIL ROOF CURB

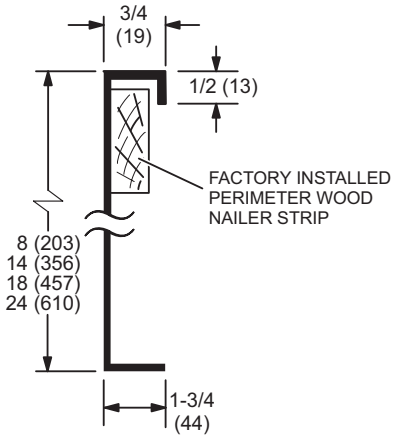

ADJUSTABLE PITCH ROOF CURB

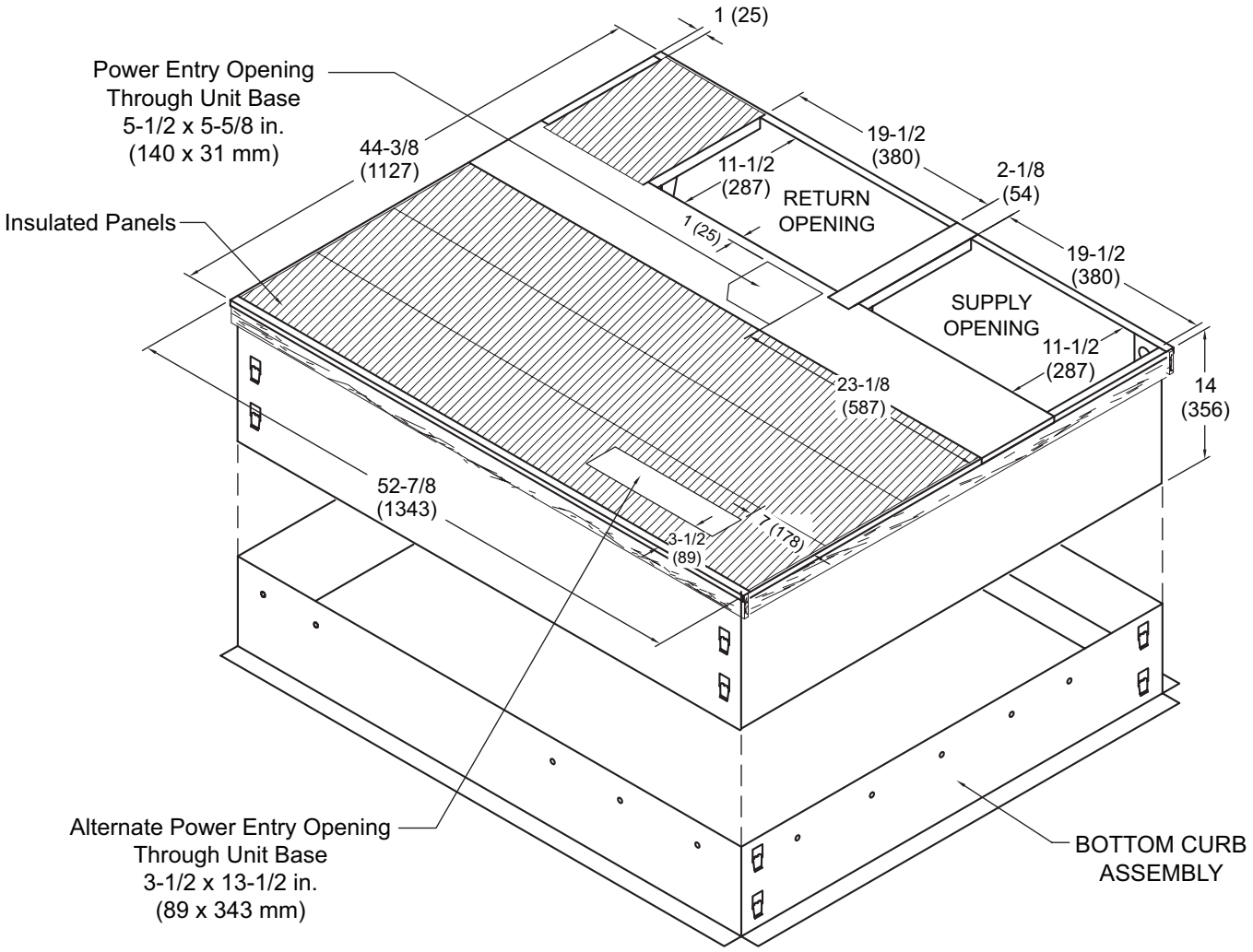

NOTE - Roof deck may be omitted within confines of curb.

TYPICAL FLASHING DETAIL FOR ROOF CURB

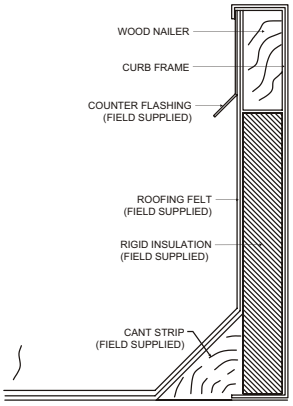

DETAIL ROOF CURB

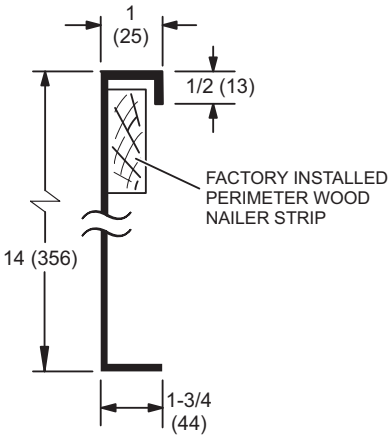

REVISIONS

Sections	Description of Change
Optional Accessories	Added Single Point Power Supply Kits.

Visit us at www.Lennox.com
For the latest technical information, www.LennoxCommercial.com
Contact us at 1-800-4-LENNOX

NOTE - Due to Lennox' ongoing commitment to quality, Specifications, Ratings and Dimensions subject to change without notice and without incurring liability.
Improper installation, adjustment, alteration, service or maintenance can cause property damage or personal injury.
Installation and service must be performed by a qualified installer and servicing agency.

©2026 Lennox Industries, Inc.