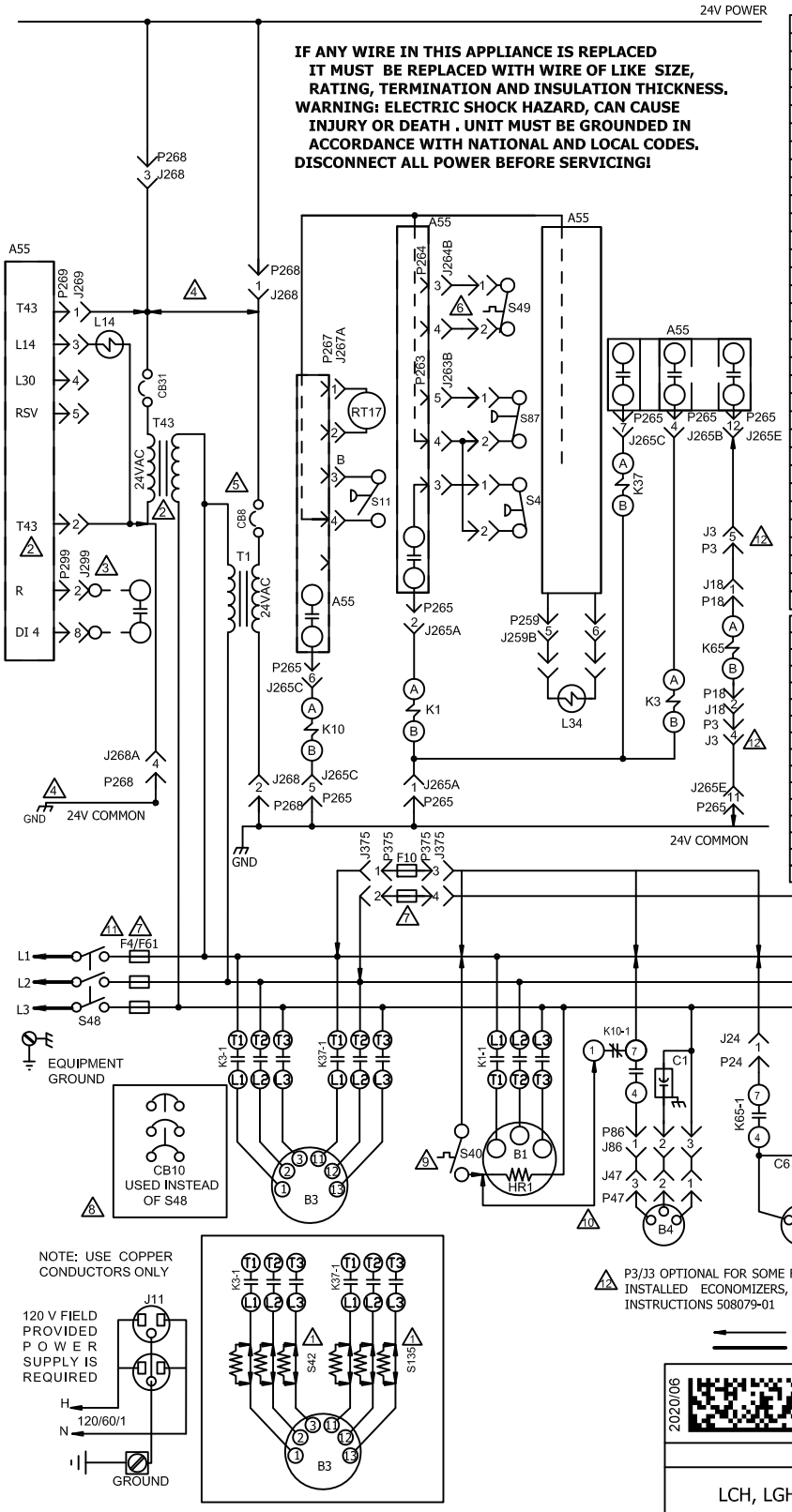

KEY	COMPONENT
A55	CONTROL, MAIN PANEL LENNOX
B1	COMPRESSOR 1
B3	MOTOR, BLOWER
B4	MOTOR, OUTDOOR FAN
B10	MOTOR, EXHAUST FAN
C1	CAPACITOR, OUTDOOR FAN 1
C6	CAPACITOR, EXHAUST FAN
CB8	CIRCUIT, BREAKER
CB10	CIRCUIT BREAKER, MAIN DISCONNECT
CB31	CIRCUIT BREAKER, TRANSFORMER T43
F4	FUSE, UNIT
F10	FUSE, OUTDOOR FAN MOTOR
F61	FUSE, SCCR OPTION UNIT
HR1	HEATER, COMPRESSOR
J11	JACK, GFI RECEPTICLE
K3, -1	CONTACTOR, BLOWER LOW
K10,-1	RELAY, OUTDOOR FAN 1
K37,-1	CONTACTOR, BLOWER HI
K65-1,2	RELAY, EXHAUST FAN
L14	VALVE, SOLENOID REHEAT COIL 1
L34	SOLENOID, TWO STAGE
RT17	SENSOR, OUTDOOR AIR
S4	SWITCH, LIMIT HI PRESS
S11	SWITCH, LOW PRESS, LOW AMBIENT KIT
S40	THERMOSTAT, CRANKCASE
S42	SWITCH, OVERLOAD FOR BLOWER MOTOR
S48	SWITCH, DISCONNECT
S49	SWITCH, FREEZESTAT
S87	SWITCH, LOW PRESS, COMPRESSOR 1
S135	SWITCH, OVERLOAD BLOWER MOTOR
T1	TRANSFORMER, CONTROL
T43	TRANSFORMER, REHEAT

J/P #	JACK/PLUG DESCRIPTION
3	ECONOMIZER BYPASS
18	EXHAUST FAN
24	EXHAUST FAN
47	OUTDOOR FAN
86	OUTDOOR FAN INTERFACE
259	COMPRESSOR SECOND STAGE
260	BLOWER,COMP TWO SPEED CONTROL
263	HIGH AND LOW PRESSURE SWITCHES
264	BLOWER DECK
265	CONTACTORS AND RELAYS
267	OUTDOOR FAN AREA
268	TRANSFORMER 1 POWER
269	HUMIDITROL
299	HUMIDITROL INTERFACE
375	F10 POWER

1. USED ON SINGLE SPEED HIGH EFFICIENCY, SINGLE SPEED M VOLT, AND MOTORS WITHOUT INTERNAL OVERLOADS.
2. ONLY IN UNITS WITH HUMIDITROL OR PHASE DETECTION OPTION
3. EXTERNAL HUMIDITROL CONTACTS
4. J268-1, -3 AND J268-2,-4 ARE CONNECTED ON UNITS WITHOUT HUMIDITROL OR PHASE DETECTION OPTIONS
5. MOVE WIRE FROM 240 TO 208 TAP ON T1 OR T43 TRANSFORMER FOR 208 LINE VOLTAGE APPLICATIONS
6. S49 IS PART OF A 5VDC CIRCUIT
7. F61 AND F10 ONLY ON UNITS WITH SCCR OPTION
8. CB10 NOT AVAILABLE ON UNITS WITH SCCR OPTION
9. S40 USED ON 036 - 060S ONLY
10. FOR 074H ONLY
11. F4 USED ON LCH UNITS ONLY
12. P3/J3 OPTIONAL FOR SOME FIELD INSTALLED ECONOMIZERS, SEE INSTRUCTIONS 508079-01

DENOTES OPTIONAL COMPONENTS
LINE VOLTAGE FIELD INSTALLED

2020/06

WIRING DIAGRAM 06/20

537736-04

COOLING

LCH, LGH - 036S, 048S, 060S, 074H - G, J, M, Y

SECTION B REV. 0

Supersedes	Form No.
537736-03	537736-04