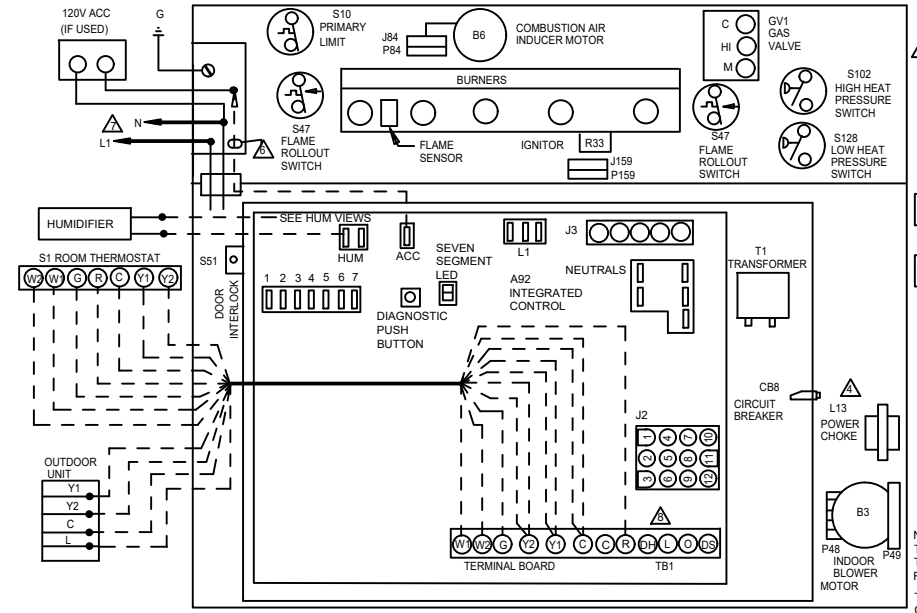

UNIT	HI COOL	LOW COOL	HIGH HEAT	LOW HEAT	PARK
UH045XE36B	BLACK	BROWN	BLUE	YELLOW	RED
UH070XE36B	BLACK	BROWN	BLUE	YELLOW	RED
UH090XE48C	BLACK	BLUE	BROWN	YELLOW	RED
UH110XE60C	BLACK	BLUE	BROWN	RED	YELLOW
BLOWER SPEED SELECTION					
HI ←					→ LOW
SPEED TAPS	BLACK	BROWN	BLUE	YELLOW	RED

24VAC HUMIDIFIER — TO C; TO R OR H ON CS7000; HUM AT IFC

120VAC HUMIDIFIER — TO N; TO L1; HUM AT IFC

JACKPLUG CHART	
J,P48	JACK/PLUG-INDOOR BLOWER-POWER
J,P49	JACK/PLUG-INDOOR BLOWER-SPD TAP
J,P2	JACK/PLUG-BURNER CONTROL
J,P84	JACK/PLUG-COMB AIR INDUCER
J,P3	JACK/PLUG-INDUCER/IGNITER
J,P159	JACK/PLUG-IGNITION

1. CUT W914 JUMPER LABELED DEHUM FROM DS TO R, AT A92 CONTROL BOARD, WHEN USED WITH ComfortSense® 7000 THERMOSTAT
2. CUT W951 JUMPER FROM O TO R, LABELED "HEAT PUMP", AT A92 CONTROL BOARD, WHEN USED FOR DUAL FUEL APPLICATIONS
3. CUT W915 JUMPER LABELED "2 STAGE COMPR." FROM Y1 TO Y2 AT A92 CONTROL WHEN USED WITH A 2 STAGE COOL THERMOSTAT.

4. L13 USED ON 3/4 AND 1 HP ONLY
5. DIP SWITCH FACTORY DEFAULT IS FOR A TWO STAGE THERMOSTAT
6. FIELD SUPPLIED ACC WIRE
7. USE COPPER CONDUCTORS ONLY
8. DH AND L TERMINALS ARE NOT USED.
9. DO NOT USE RED SPEED TAP FOR HIGH HEAT ON ALL MODELS. DO NOT USE YELLOW SPEED TAP FOR HIGH HEAT ON 070XE36B OR 090XE48C MODELS.

THERMOSTAT HEAT ANTICIPATION SETTING

.65 AMP	HONEYWELL VALVE
.43 AMP	WHITE RODGERS VALVE

NOTE: SEE INSTALLATION INSTRUCTIONS FOR PROCEDURE TO SET CORRECT BLOWER SPEED FOR SPECIFIC COOLING TONNAGE BEING APPLIED, AND HEATING TEMPERATURE RISE DESIRED.

TYPICAL SYSTEM SHOWN FOR 2 HEAT/2 COOL WITH A CONVENTIONAL THERMOSTAT. SEE INSTALLATION INSTRUCTIONS FOR CONNECTIONS TO OTHER EQUIPMENT AND ACCESSORIES.

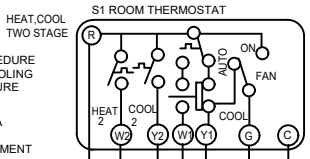

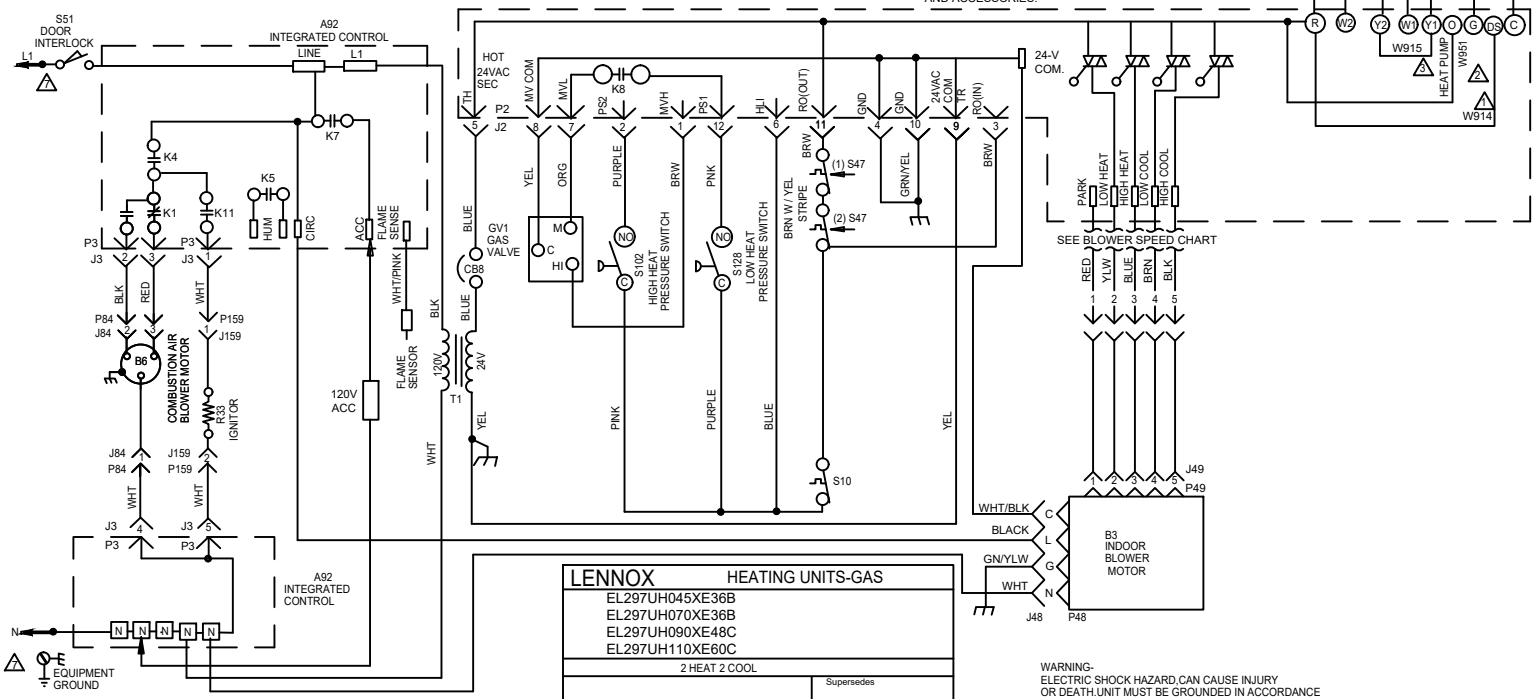

LINE VOLTAGE FIELD INSTALLED
CLASS II VOLTAGE FIELD WIRING
DENOTES OPTIONAL COMPONENTS

LENNOX HEATING UNITS-GAS

EL297UH045XE36B
EL297UH070XE36B
EL297UH090XE48C
EL297UH110XE60C

2 HEAT 2 COOL

Supersedes

05/23

Form No. 538341-01

© 2011

Litho U.S.A.

WARNING-
ELECTRIC SHOCK HAZARD,CAN CAUSE INJURY OR DEATH.UNIT MUST BE GROUNDED IN ACCORDANCE WITH NATIONAL AND LOCAL CODES.

NOTE-
IF ANY WIRE IN THIS APPLIANCE IS REPLACED,IT MUST BE REPLACED WITH WIRE OF LIKE SIZE, RATING, INSULATION THICKNESS, AND TERMINATION