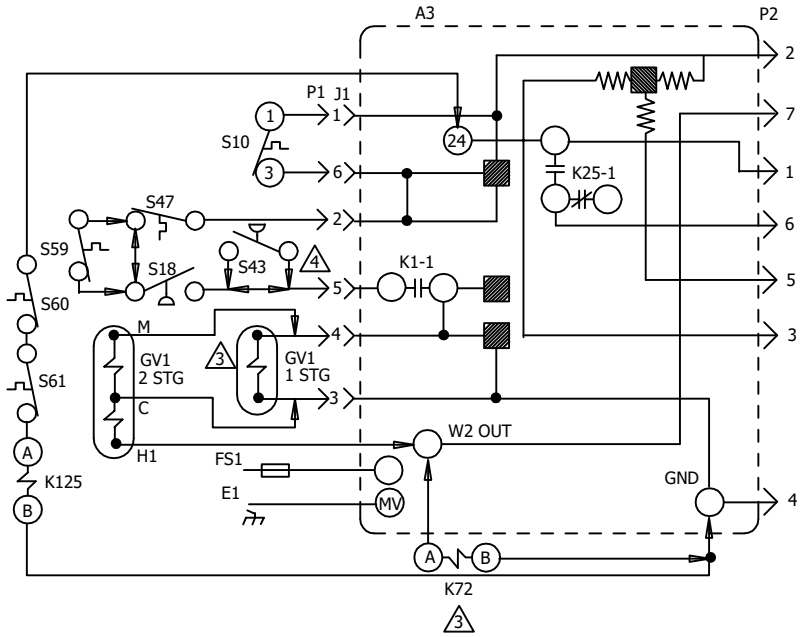

KEY	DESCRIPTION
A3	CONTROL - BURNER 1
B6	MOTOR, COMBUSTION AIR BLOWER 1
C3	CAPACITOR, COMB AIR BLOWER MOTOR 1
E1	SPARK
FS1	SENSOR, FLAME
GV1	VALVE, GAS 1
HR6	HEATER, 50C LOW AMBIENT KIT
K72-1, 2	RELAY, GAS 3
K125-1	RELAY, HEAT SHUTOFF
S10	SWITCH, LIMIT PRIMARY GAS
S18	SWITCH, COMB AIR BLOWER PROVE
S43	SWITCH, LOW GAS PRESSURE
S47	SWITCH, FLAME ROLLOUT BURNER 1
S59	THERMOSTAT, OPEN -20F, CLOSE 10F
S60	THERMOSTAT, OPEN 20F, CLOSE -10F
S61	THERMOSTAT, OPEN 50F, CLOSE 20F
T3	TRANSFORMER, COMB AIR BLOWER

J/P	JACK/PLUG DESCRIPTION
1	GAS LIMIT
2	HEAT
19	COMB AIR BLOWER
21	COMB AIR BLOWER 2

INDICATES MICRO PROCESSER

DENOTES OPTIONAL COMPONENTS

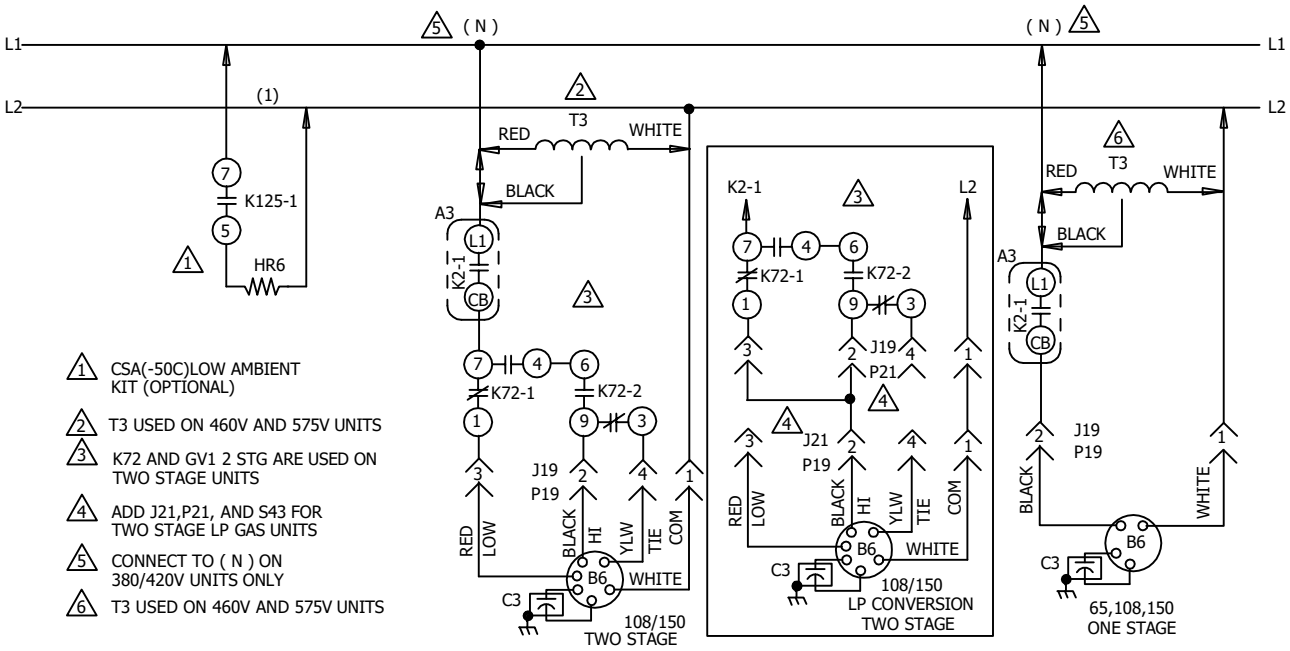

1. CSA(-50C)LOW AMBIENT KIT (OPTIONAL)
2. T3 USED ON 460V AND 575V UNITS
3. K72 AND GV1 2 STG ARE USED ON TWO STAGE UNITS
4. ADD J21,P21, AND S43 FOR TWO STAGE LP GAS UNITS
5. CONNECT TO (N) ON 380/420V UNITS ONLY
6. T3 USED ON 460V AND 575V UNITS

2021/03	WIRING DIAGRAM 537776-03	03/21
HEATING		
GAS HEAT - KGA, KGB - 65 THRU 150 UNITS		
SECTION A		REV. 1
Supersedes 537776-02	New Form No. 537776-03	