GAS FURNACES

# SLP99UHV

## DAVE LENNOX *SIGNATURE*® COLLECTION

## Upflow / Horizontal - Variable Capacity - Variable Speed Blower - 60Hz

***RESIDENTIAL PRODUCT SPECIFICATIONS***

Bulletin No. 210915
July 2024
Supersedes all previous versions

S40 Smart Wi-Fi
Communicating Thermostat
(Not Furnished)

**AFUE - Up to 99%**
**Input - 66,000 to 132,000 Btuh**
**Nominal Add-on Cooling - 2 to 5 Tons**

## MODEL NUMBER IDENTIFICATION

**SL P 99 UH 070 X V 36 B**

**Unit Type**
SL = Dave Lennox *Signature*® Collection

**Stages**
P = Precise Comfort Technology™

**AFUE**
99 = 99%

**Configuration**
UH = Upflow/Horizontal

**Nominal Gas Heat Input**
070 = 66,000 Btuh
090 = 88,000 Btuh
110 = 110,000 Btuh
135 = 132,000 Btuh

**Low NOx**
X = Units meet California Nitrogen Oxides Standard (40 ng/J)

**Blower**
V = Variable Speed Blower Motor

**Nominal Add-On Cooling Capacity**
36 = 2-3.5 tons
48 = 4 tons
60 = 4-5 tons

[1] **Cabinet Width**
B = 17-1/2 in.
C = 21 in.
D = 24-1/2 in.

[1] Indoor coils with the same letter designation physically matches the furnace.

## FEATURE HIGHLIGHTS

1. SilentComfort™ Technology
2. Lennox Duralok Plus™ Heat Exchanger
3. Secondary Heat Exchanger
4. Inshot Burners
5. Variable Capacity Gas Control Valve
6. Variable-Speed Combustion Air Inducer
7. SureLight® Integrated Furnace Control
8. Variable Speed Direct Drive Blower
9. Insulated Cabinet
10. Safety Interlock Switch
11. Gas Piping And Electrical Inlets

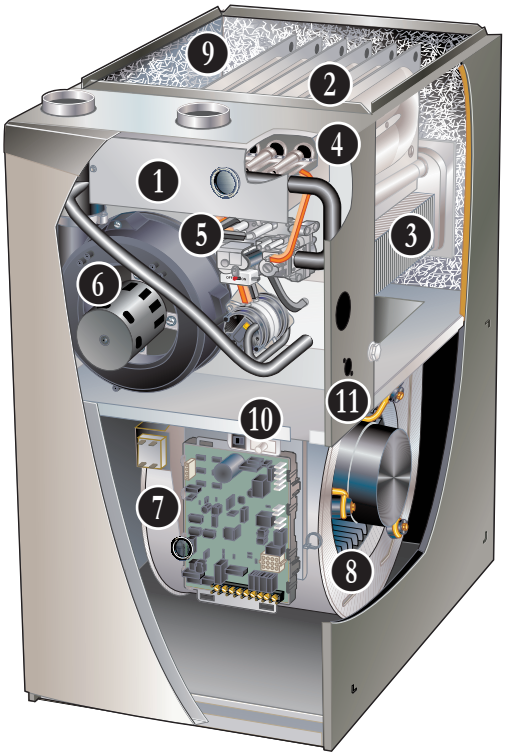


**NOTE - SLP99V FURNACES CANNOT BE TWINNED!**

## CONTENTS


Approvals And Warranty . . . 3
Blower Data . . . 21
Dimensions - Furnace/Coil Combined Dimensions . . . 17
Dimensions - Optional Accessories . . . 16
Dimensions - Optional Accessories - Venting . . . 18
Dimensions - Unit - Horizontal Position . . . 15
Dimensions - Unit - Upflow Position . . . 14
Features . . . 3
Gas Heat Accessories . . . 10
Installation Clearances . . . 13
Optional Accessories - Order Separately . . . 10
Outdoor Termination Kit Usage . . . 11
Specifications . . . 9
Vent Lengths . . . 12
Vent Lengths - Uninsulated Exhaust Pipe In Unconditioned Space . . . 11

## APPROVALS AND WARRANTY

### APPROVALS

- AHRI Certified
- CSA International Certified
- Tested and rated according to US DOE test procedures and FTC labeling regulations
- Units are approved for installations from 0 - 4500 ft.
- ENERGY STAR® certified units are designed to use less energy, help save money on utility bills, and help protect the environment
- ISO 9001 Registered Manufacturing Quality System
- Blower data from unit tests conducted in Lennox Laboratory air test chamber

**NOTE** - This furnace has not been CSA International design certified for installation in mobile homes, recreational vehicles, or outdoors.

California Only

- These furnaces **do not meet** the South Coast Air Quality Management District (SCAQMD) Rule 1111 and San Joaquin Valley Air Pollution Control District (SJVAPCD) Rule 4905 NOx emission limit (14 ng/J) and cannot be installed within the SCAQMD, SJVAPCD and Bay Area
- These furnaces **are** approved by the California Energy Commission and meets California Nitrogen Oxides Standard (NOx) limits of 40 ng/J

### WARRANTY

- Duralok Plus™ Aluminized Steel Heat Exchanger:
  - Limited lifetime (twenty year transferable) in residential applications
  - Limited ten years in non-residential applications
- All other covered components:
  - Limited ten years in residential installations
  - Limited one year in non-residential installations

**NOTE** - Refer to Lennox® Basic Limited Warranty at www.Lennox.com for additional details.

## FEATURES

### APPLICATIONS

- Input capacities of 66,000, 88,000, 110,000 and 132,000 Btuh
- Variable heat capacity in increments as small as 1% or as large as needed within minimum/maximum input range
- Energy efficiency (AFUE) - Up to 99%
- Compact cabinet for upflow, horizontal-right or horizontal-left applications without any modifications
- Variable speed blower ideal for zoning applications
- Lennox add-on indoor coils, high-efficiency air cleaners and humidifiers can easily be added to furnace
- Shipped factory assembled with controls installed and wired
- Each unit factory test operated to ensure proper operation

### ZONING APPLICATIONS

- The SLP99V furnace is designed to work with the Lennox® Smart Zoning System with the Lennox® Communicating Thermostat
- The Lennox® Smart Zoning System provides direct feedback to the SLP99V, controlling both airflow and heat output to precisely match the comfort requirements for up to four zones

### HEATING SYSTEM

1 SilentComfort™ Technology
- Patented burner sound enclosure and extra cabinet insulation reduces operating sound levels

2 Lennox Duralok Plus™ Heat Exchanger Assembly
- Lennox developed heat exchanger assembly consists of primary heat exchanger and secondary condenser coil assembly
- Main multi-pass crimped seam design clamshell type
- Constructed of heavy-gauge, aluminized steel
- Designed for normal expansion and contraction with maximum efficiency and minimum resistance to air flow

3
- Secondary heat exchanger condenser coil constructed of aluminum fins fitted to stainless steel tubes
- Coil is factory tested for leaks
- Condensate drain header box assembly located on front of coil
- Compact size permits low overall design of furnace cabinet
- Laboratory life cycle tested in excess of industry standards

## HEATING SYSTEM (continued)

### Lennox Designed Header Box
- Header box on end of condenser coil collects flue condensate for disposal through condensate drains
- Drains are located on each side of the cabinet for easy field installation of condensate drain trap
- Only one drain is used, the other drain is sealed
- Condensate drain trap is included with the unit for field installation

### Lennox Designed Flue Condensate Trap Assembly
- Field installed outside the conditioned air stream
- Assembly can be mounted on either side of cabinet in upflow applications
- Assembly is mounted below the cabinet in horizontal applications
- Can also be mounted remotely (up to 5 ft. away) from unit
- See Dimension Drawing and Installation Instructions
- 90° street elbow furnished for ease of drain trap installation
- Drain connection can be made with field provided PVC pipe or PVC coupling
- Drain cap on trap allows easy cleaning and winterizing

### 4 Inshot Burners
- Aluminized steel inshot burners provide efficient, trouble-free operation
- Burner venturi mixes air and gas in correct proportion for proper combustion
- Burner assembly is removable from the unit as a single component for ease of service

### 5 Variable Capacity Gas Control Valve
- Variable capacity gas control valve adjusts capacity output in increments as small as 1% or as large as needed
- 24 volt redundant combination valve combines manual shut off switch (On-Off), automatic electric valve (dual) and gas pressure regulation into a compact combination control

### Flame Rollout Switch
- Factory installed on burner box
- Switch provides protection from abnormal operating conditions
- Manual reset

### SureLight® Hot Surface Ignitor
- Tough, reliable, long-life, trouble-free performance
- Silicon nitride ignitor
- Cemented to steatite block for protection against current leakage
- Ignition leads are constructed of nickel plated copper and are enclosed in high temperature Teflon® insulation for dependable operation

### 6 Variable Speed Combustion Air Inducer
- Three-phase variable speed inducer motor is controlled by the SureLight Control
- Overload protected (auto-reset)
- Heavy-duty blower prepurges heat exchanger and safely vents flue products
- Operates only during heating cycle

### 7 Pressure Switches (Two-Stage)
- Prove Combustion Air Inducer operation before allowing gas valve to open

### Limit Control
- Primary limit is accurately located on vestibule panel
- Automatic reset

## Optional Accessories

### High Altitude Pressure Switch Kit/High Altitude Conversion Kit
- Required for proper unit operation on installations above 7500 ft. (Switch Kit) or 4500 ft. (Conversion Kit)

### Natural Gas to LPG/Propane Conversion Kit
- Required for field changeover from natural gas to LPG/Propane
- Includes gas valve and orifices

### LPG/Propane to Natural Gas Conversion Kit
- Required for field changeover from LPG/Propane to natural gas

### Muffler (US Only)
- Significantly reduces outdoor operating sound levels
- Two-inch diameter muffler is optional for 070 through 110 input models

**NOTE** - Two-inch muffler is optional for the 110 input model with a maximum vent pipe length of up to 29 ft. Three-inch diameter muffler is optional for 110 and 135 input models.

**NOTE** - Three-inch muffler is optional for the 110 input model with a minimum vent pipe length of 30 ft.

- Installed vertically in the exhaust piping
- See Optional Accessory Dimension Drawing

## DIRECT VENT SEALED COMBUSTION SYSTEM

- Furnace features a “sealed combustion” system and can only be installed in Direct Vent applications
- In Direct Vent applications, combustion air is supplied from outdoors and flue gases are discharged outdoors

**NOTE** - Lennox has approved the use of DuraVent® PolyPro® and Centrotherm InnoFlue® manufactured vent pipe and terminations as an alternative to PVC vent pipe. Must be ordered separately.
Tested and listed to the ULC S636 standard in Canada

- The polypropylene venting system must follow the uninsulated and unconditioned space vent lengths listed in the table on 13
- Refer to the Installation Instructions for additional details

## FEATURES

### DIRECT VENT SEALED COMBUSTION SYSTEM (continued)

Flue Coupling (furnished)

- Assists with exhaust flue piping connection and servicing
- Includes flexible one 2-inch rubber coupling and two adjustable bands
- Approved for all Lennox 90% furnaces

Optional Accessories

**Vent Termination Kits**

- Facilitates installation of combustion air intake pipe and flue exhaust pipe
- Refer to venting table in this bulletin to determine pipe size needed and proper termination kit required
- See Optional Accessories table and dimension drawings

Concentric Termination Kit

- 2 or 3 inch kit contains concentric termination assembly, reducer bushing and 45° elbow
- 2 inch kit for -070 model contains an outdoor exhaust accelerator
- Kit requires single hole penetration of roof or wall for installation
- Roof Termination Flashing Kit available for use 2 inch Kits
- CSA certified

Flush-Mount Termination Kit

- Kit contains flush-mount termination, accelerator, mounting template and hardware
- Kit may be used with 2, 2-1/2 or 3 inch pipe

Wall Assembly Termination Kits

Close Couple (US Only)

- 2 or 3 inch kit consists of close-couple, side-by-side PVC piping with galvanized steel wall cover plate
- Seals and isolates intake and exhaust piping penetration of wall
- Piping spacing and length is sized for proper wall installations
- CSA certified

Close Couple WTK (Canada Only)

- 2 or 3 inch kit contains one insulated faceplate, one insulated exhaust pipe, elbow and fittings

**NOTE** - Maintain a maximum of 6 inches between the inlet and outlet openings in the installation of the pipes.

Roof Termination Flashing Kit

- For vertical venting through a roof
- 2 or 3 inch kit contains two neoprene rubber roof flashings
- Vent pipe and insulation not furnished
- Flashing Kit can also be used with Concentric Vent Termination Kits used in vertical venting rooftop applications

### BLOWER

8 Variable Speed Direct Drive Blower

- Each blower assembly statically and dynamically balanced
- Blower assembly easily removed for servicing

Variable Speed Blower Motor

- Variable speed motor maintains specified air volume from 0 though 0.8 in. w.g. (heating) and 0 through 1.0 in. w.g. (Cooling) static range
- Variable speed operation is achieved by the use of an ECM (Electronically Commutated Motor) motor
- Motor is controlled by furnace control
- Change in blower speed is easily accomplished by simple DIP switch change on furnace control
- See Blower Data tables
- Motor is resiliently mounted

**NOTE** - When furnaces are used with the Lennox® Smart Zoning System and the Lennox® Communicating Thermostat, the blower motor operates from predetermined minimum - maximum air volumes to satisfy zone requirements.

### CONTROLS

9 SureLight® Integrated Furnace Control (Lennox® Communicating)

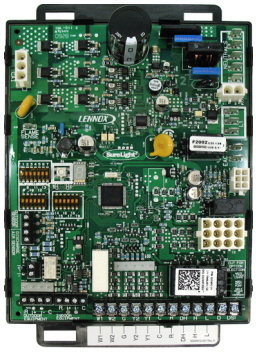

- Advanced control communicates information about various operating parameters in the furnace to the optional Lennox® Communicating Thermostat to constantly maintain the highest level of comfort, performance and efficiency available
- Auto Configuration - On start-up the control automatically sends a description of the unit to the optional Lennox® Communicating Thermostat to automatically configure the number of stages and features available
- Terminals for connecting a conventional heating/cooling thermostat are also provided on the control
- Control also features:
  - Innovative AirFlex™ technology allows custom blower settings based on the application.
  - Precise Comfort Technology™ automatically adjusts blower speed and heat input in increments as small as 1% or as large as needed for greater temperature control
  - Variable-speed combustion air inducer is controlled by the SureLight Control. Prior to ignition, a pre-purge cycle for 15 seconds is initiated. After the main burners are turned off, a post-purge cycle for 20 seconds is run
- Thermostat Control - Designed to operate in a variable capacity mode automatically adjusting firing rate based on demand and changing conditions

## CONTROLS (continued)

**NOTE** - For optimal performance, the use of a high-quality, digital two-stage thermostat with adjustable settings for first stage/second stage, on/off differentials and adjustable stage timers is recommended.

Furnace Input Staging Options

| Thermostat Type | Input Staging Available |
|---|---|
| **Lennox® Communicating Thermostat** | Variable Capacity (increments as small as 1%) |
| | Four Stage (35, 60, 80, 100%) |
| **Two-Stage (Conventional)** | Variable Capacity (increments as small as 1%) |
| | Two-stage (70% and 100%) |
| **Single-Stage (Conventional)** | Three-Stage (35%, 70% and 100%) |

- SureLight® Ignition Control - Ignition control continuously monitors line voltage and maintains the igniter power at a constant level to provide consistent lighting and maximum igniter life
- Safety Controls - Flame sensor utilizes flame rectification for safe and reliable operation
- Should flame fail to ignite, control will initiate 4 re-attempts at ignition before locking out unit operation for 60 minutes
- Watchguard type circuit automatically resets ignition controls after one hour of continuous thermostat demand after unit lockout, eliminating nuisance calls for service
- Display LED - Seven segment LED displays alpha-numeric information related to diagnostics as well as system operation and status
- Diagnostic codes are held in non-volatile memory, immune from power interruptions
- Holds up to ten diagnostic codes in order of occurrence for recall on demand
- Port on blower door allows for easy viewing

## DIP Switch Settings

**NOTE** - DIP switches settings are not used with Lennox® Communicating Thermostat.

- Select Thermostat Used - Single-Stage or Two-Stage
- Select Operation Mode - Two-Stage, Three-Stage or Variable Capacity
- Two selectable second stage recognition times (7 and 12 minutes) are available on the control when the furnace is used with a single-stage thermostat
- When used with a two-stage thermostat, furnace will only initiate second stage operation with a second stage thermostat demand
- Heating Speeds - A combination of DIP switch settings allow Normal, 7.5% increase, 15% increase, 7.5% decrease or 15% decrease motor speed selection within heating speed selected for fine tuning air volume
- Cooling Speeds - A combination of DIP switch settings allow Normal, 10% increase or 10% decrease motor speed selection within cooling speed selected for fine tuning air volume
- See Blower Performance tables
- Blower Speed Ramping (Cooling Mode) - DIP switch settings allow one of four blower speed profiles during cooling operation
  - Profile A (factory setting) - Motor runs at 50% for 30 seconds, then at 82% for 7-1/2 minutes, then at 100% (if needed) until demand is satisfied. Once demand is met, motor runs at 50% for 30 seconds, then ramps down to stop.
  - Profile B - Motor runs at 82% for 7-1/2 minutes and then at 100% (if needed) until demand is satisfied. Once demand is met,motor ramps down to stop.
  - Profile C - Motor runs at 100% until demand is satisfied. Once demand is met, motor runs at 100% for 60 seconds, then ramps down to stop.
  - Profile D - Motor runs at 100% until demand is satisfied Once demand is met, motor ramps down to stop.
- Dehumidification (Active or Humiditrol® Option) - A jumper on the control must be clipped to enable active dehumidification and/or operation with a Humiditrol® Whole-Home Dehumidification System
- A humidity controlling thermostat or device is also required
- During a call for cooling, air volume is automatically reduced, forcing humidity removal by the air conditioner or heat pump system
- After the humidity has reached the desired set-point the cooling air volume returns to its designed rate
- A dehumidification signal from the thermostat reduces the cooling cfm to 70% of the requested cooling cfm
- Dual-Fuel Operation - A jumper on the control must be clipped to enable operation with a single or two-stage heat pump. The indoor blower is started without delay when a call for heat is received
- Two-Stage Compressor Operation - A jumper on the control must be clipped to enable operation with a two-stage compressor
- The cooling blower speeds for first and second stage cooling will be dictated by the applicable DIP switch settings
- Lennox System Operations Monitor Connection - Monitors outdoor unit operation (communicating mode)
- Blower On Time (Heating) - Blower on time is fixed at 30 seconds, blower off time is adjustable from 60, 90, 120 and 180 seconds (factory setting - 90 seconds)
- Blower Off Time (Cooling) - For air-conditioning applications, blower on time is 2 seconds following thermostat demand for cooling
- Blower off delay is 30 seconds at 50% of high cool cfm (factory default)
- Controls evaporator humidity by controlling blower and compressor speed on two-stage outdoor units when used with Lennox® Communicating Thermostat

## CONTROLS (continued)

- Continuous Blower Speed - Adjustable continuous blower speed is a percentage of the high cooling speed selection
- There are four selectable options (via DIP switch settings) of 28%, 38% (default setting), 70% and 100%
- Accessory Terminals - Two accessory terminals furnished for additional power supply requirements for 120 volt (less than 1 amp) power humidifiers and powered air cleaners
- One 24 volt humidifier output furnished for non-powered humidifiers
- Control is factory installed in the unit control box

### Discharge Air Averaging Sensor

- Shipped with furnace for field installation in the supply air plenum for "enhanced" commissioning at startup (S40 thermostat only) if required
- Measures temperature rise (heating low/high fire mode) and temperature drop (cooling low/high mode)

### 24 Volt Transformer (40VA)

- Furnished and factory installed on outside of control box
- Circuit breaker (furnished) is wired in series

### Field Wiring Make-up Box

- Furnished for line voltage wiring
- Factory installed internally on left side of furnace
- Box may be installed internally on right side of furnace

### Optional Accessories

### S40 Smart Wi-Fi Thermostat (part of the Lennox® Residential Communicating Control System)

- Recognizes and connects to all Lennox® Communicating products to automatically configure and control the heating/cooling system (based on user-specified settings) for the highest level of comfort, performance and efficiency

- Recognizes model and serial number information for Lennox® Communicating products to simplify system setup
- Lennox Smart Room Sensors, Lennox Wireless Extenders and Lennox Smart Air Quality Monitor can be added to the system
- Smart home automation compatible with Amazon Alexa®, Google Assistant, Control4® and Building36®
- Sends service alerts and reminders
- Lennox Smart Thermostat App features Wi-Fi remote temperature monitoring and adjustment through a home wireless network apps for smartphones or tablets
- Lennox Smart Technician App allows installer to manage systems in the home
- Service Dashboard features online real-time monitoring and advanced diagnostics of installed Lennox® Communicating systems
- Simple easy-to-use touchscreen allows complete system configuration
- Scheduled maintenance alerts, system warnings and troubleshooting are also displayed on thermostat screen
- Easy to read 7 inch high definition color display (measured diagonally)
- Conventional outdoor units (not Lennox® Communicating) can easily be added and controlled by the S40 Thermostat
- Installer setup screens allow quick and simple system configuration without a manual, Installer can also run tests on complete system or individual components for easy maintenance and troubleshooting
- Serial communications bus (RSBus), with less wiring than a conventional heating/cooling system, allows system communication
- Uses standard 4-wire unshielded thermostat wiring
- High Definition Color Display with Subbase and wallplate furnished for easy installation

**NOTE** - See the Lennox® S40 Thermostat Product Specifications bulletin in the Controls section for more information.

### Remote Outdoor Temperature Sensor

- Allows thermostat to display outdoor temperature
- Automatically detected when connected to thermostat

**NOTE** - Sensor is required for the Enhanced Dehumidification Accessory (EDA).

**NOTE** - Sensor is furnished as standard with Lennox® Communicating outdoor units, optional for conventional units.

### Thermostat

- Thermostat is not furnished with unit
- See Lennox Price Book for selection

### Transformer (75VA)

- Recommended when furnace is used with zoning or defrost thermostats and other 24V accessories requiring a higher VA rating
- Circuit breaker (furnished) is wired in series
- Replaces the standard 40VA transformer

## CABINET

- Low-profile, narrow width allows easy installation
- Heavy-gauge, cold rolled steel construction
- Pre-painted finish
- Flanges provided on supply air opening for ease of plenum connection or alignment with indoor coil

**CABINET (continued)**

- 10 Insulated with foil faced insulation on sides and back of heating compartment and mat faced insulation in blower compartment
- Sealed blower compartment
- Inner blower compartment access panel seals blower compartment from air leakage
- Cabinet door can be removed without any tools
- Complete service access
- Safety interlock switch automatically shuts off power to unit when blower compartment access door is removed
- 11 Gas piping and electrical inlets are provided in both sides of cabinet

Bottom/Side Return Air Entry

- Upflow/horizontal with bottom return air entry:
  - Remove furnished bottom seal panel from cabinet
- Upflow only with side return-air entry:
  - Corners are marked on either side of cabinet for return air cut-out
- See dimension drawings

**NOTE** - 60C and 60D size units that require air volumes over 1800 cfm must have one of the following:

- Single side return air and Optional Return Air Base with transition that must accommodate required 20 x 25 x 1 inch air filter to maintain proper velocity
- Bottom return air
- Return air from both sides
- Bottom and one side return air
- See Blower Performance Tables for additional information

Coil Match-Up

- All furnaces exactly match Lennox cased upflow indoor coils and horizontal indoor coils with same letter designation (A, B, C, D) in model number
- No adaptor required
- Engaging holes furnished on cabinet for alignment
- Lennox uncased coils match furnaces without any overhang but require an optional adaptor base or field fabricated transition to match furnace opening
- See coil bulletin for additional information

Low Leakage Cabinet

- All models have less than 2% air leakage
- Meets ANSI/ASHRAE Standard 193-2010 "Method of Test for Determining the Air Tightness of HVAC Equipment"

## Optional Accessories

Condensate Drain Heat Cable Kits

- Self-limiting wattage heat cable prevents condensate drain from freezing in unconditioned areas
- Available in 6 or 24 ft. lengths

Horizontal Suspension Kit

- Provides suspension of unit and indoor coil in horizontal applications
- Allows complete service access
- Consists of corner mounted hanging brackets with vibration isolators, return air end support rail and hardware for assembly
- Metal hanging straps must be field provided

Crawl Space Vent Drain Kit

- Allows venting through a crawl space for upflow and horizontal applications
- Includes 2 or 3 inch sanitary tee, 2 inch PVC assembly, PVC boot and clamp
- Kit for Canada is certified to ULC S636

Return Air Base

**NOTE** - On furnaces with side return air and condensate trap on the same side of the cabinet, a field fabricated transition or Return Air Base is required when using an IAQ product higher than 14-3/16 inches installed next to the unit and serviced from the front. IAQ products higher than 20 inches require a field fabricated transition.

**NOTE** - Must be used for 60C and 60D size models with air volumes over 1800 cfm in upflow applications when only one side return is required.

- Cabinet is shipped flat for easy field assembly
- Pre-painted steel to match the furnace
- See Dimension Drawing

High Performance Economizer
(Commercial Applications Only)

- Designed for applications requiring outdoor air to be utilized in a commercial HVAC system
- Allows the entry of fresh outdoor air for free cooling, reducing the requirement for mechanical cooling
- Heavy gauge galvanized steel cabinet lined with thick fiberglass insulation
- Mixed air sensor, outdoor air sensor and 24VAC transformer furnished
- Approved for California Title 24 building standards
- ASHRAE 90.1-2010 compliant
- See separate Product Specifications bulletin for additional information and available control and sensor options

**NOTE** - Economizer is not Lennox® communicating compatible.

## FEATURES

**FILTER (not furnished)**

- Filter and provisions for external mounting must be field provided

### Optional Accessories

Air Filter and Rack Kit for Horizontal Return Air (End) Applications

- Washable or vacuum cleanable polyurethane frame type filter and external end return air rack
- Rack has filter door for servicing
- Flanges on rack for duct connection
- Field installed
- See dimension drawing

Air Filter and Rack Kit for Upflow Side Return Air
**NOTE** - Not for use with Return Air Base

- Washable or vacuum cleanable polyurethane frame type filter and external side return air rack available for field installation
- Available in single and ten pack kits
- Rack has filter door for servicing
- Flanges on rack for duct connection
- Field installs on either side of unit cabinet
- See dimension drawing

**REFRIGERATION DETECTION SYSTEM (RDS)**

### Optional Accessories

Refrigerant Detection System (RDS) Coil Sensor Kit

- Complies with UL 60335-2-40 approved standard
- Required for field installation for all systems using R-454B refrigerant if sensor is not furnished with coil
- Consists of Refrigerant Detection System (RDS) sensor, lineset sleeves, mounting brackets and A2L labeling
- Sensor ensures safe operation for systems equipped with R-454B refrigerant
- Sensor will detect anu R-454B refrigerant

Refrigerant Detection System (RDS) Blower Control Board

Communicating Blower Control Board (Universal)

- Communicating Blower Control Board and Sensor can be used universally with any Lennox® communicating furnace or any non-communicating 24 volt furnace

Non-Communicating Blower Control Board

- Non-Communicating Blower Control Board and Sensor can be used with any non-communicating 24 volt furnace

Standard Features

- Complies with UL 60335-2-40 approved standard
- Required for all systems using R-454B refrigerant
- Connects to the RDS sensor furnished with the RDS Coil Sensor Kit
- Supports up to two RDS Sensors (factory setting)
- Used as an interface between indoor unit and thermostat to control system
- Ensures safe operation for systems equipped with R-454B refrigerant
- If R-454B refrigerant is detected, the refrigerant detection system will stop compressor and/or heating operating and operate the blower to reduce concentrations in the conditioned space
- Once safe levels are reached the HVAC system will resume normal operation
- Multi-color LED for system status and as an aid in troubleshooting
  - Flashing LED codes for system status (Green/Blue) and diagnosing Sensor errors (Red)
- Alarm relay can trigger an external alarm if R-454B refrigerant is detected
- Zone relay opens all zone dampers (if part of a zoning system) if R-454B refrigerant is detected
- Power is disabled to non-communicating thermostats to prevent demand if R-454B refrigerant is detected
- On system start-up blower will run for five minutes and any thermostat demands are disabled
- Dimensions (H x W x D): 7-7/16 x 7-7/16 x 2-1/2 (189 x 189 x 127 mm)

**NOTE** - See Refrigerant Detection System (RDS) Components Table on page 12.

See the CK40 Indoor Coil Product Specifications bulletins for more information.

Refer to the Installation Instructions for additional information.

## SPECIFICATIONS

| | | | Model No. | SLP99UH070XV36B | SLP99UH090XV36C | SLP99UH090XV48C |
|---|---|---|---|---|---|---|
| Gas Heating Performance | | | [1] AFUE | 98.1% | 98.1% | 98.2% |
| | Maximum | | Input - Btuh | 66,000 | 88,000 | 88,000 |
| | | | Output - Btuh | 64,000 | 86,000 | 85,000 |
| | | | Temperature rise range - °F | 50 - 80 | 60 - 90 | 50 - 80 |
| | | | Gas Manifold Pressure (in. w.g.) Nat. Gas / LPG/Propane | 3.5 / 10.0 | 3.5 / 10.0 | 3.5 / 10.0 |
| | Minimum | | Input - Btuh | 23,000 | 31,000 | 31,000 |
| | | | Output - Btuh | 22,000 | 30,000 | 30,000 |
| | | | Temperature rise range - °F | 35 - 65 | 35 - 65 | 35 - 65 |
| | | | Gas Manifold Pressure (in. w.g.) Nat. Gas / LPG/Propane | 0.5 / 1.5 | 0.5 / 1.5 | 0.5 / 1.5 |
| | | | High static - in. w.g. | 0.8 | 0.8 | 0.8 |
| Connections in. | | | Intake / [2] Exhaust Pipe (PVC) | 2 / 2 | 2 / 2 | 2 / 2 |
| | | | Gas pipe size IPS | 1/2 | 1/2 | 1/2 |
| | | | Condensate Drain Trap (PVC pipe) - i.d. | 3/4 | 3/4 | 3/4 |
| | | | with furnished 90° street elbow | 3/4 slip x 3/4 Mipt | 3/4 slip x 3/4 Mipt | 3/4 slip x 3/4 Mipt |
| | | | with field supplied (PVC coupling) - o.d. | 3/4 slip x 3/4 MPT | 3/4 slip x 3/4 MPT | 3/4 slip x 3/4 MPT |
| Indoor Blower | | | Wheel nominal diameter x width - in. | 10 x 9 | 10 x 9 | 11 x 11 |
| | | | Motor output - hp | 1/2 | 1/2 | 3/4 |
| | | | Tons of add-on cooling | 2 - 3 | 2 - 3.5 | 2.5 - 4 |
| | | | Air Volume Range - cfm | 339 - 1365 | 520 - 1360 | 528 - 1770 |
| Electrical Data | | | Voltage (Maximum Amps) | 120 volts - 60 Hertz - 1 phase | | |
| | | | Blower motor full load amps | 7.7 | 7.7 | 10.1 |
| | | | Maximum overcurrent protection | 15 | 15 | 15 |
| Shipping Data | | | lbs. - 1 package | 139 | 156 | 166 |

NOTE - Filters and provisions for mounting are not furnished and must be field provided.

[1] Annual Fuel Utilization Efficiency based on DOE test procedures and according to FTC labeling regulations. Isolated combustion system rating for non-weatherized furnaces.

[2] 2 in. Rubber Flue Coupling is furnished for exhaust pipe connection to unit.

## SPECIFICATIONS

| | | | Model No. | SLP99UH090XV60C | SLP99UH110XV60C | SLP99UH135XV60D |
|---|---|---|---|---|---|---|
| Gas Heating Performance | | | [1] AFUE | 99% | 98.1% | 98.4% |
| | Maximum | | Input - Btuh | 88,000 | 110,000 | 132,000 |
| | | | Output - Btuh | 87,000 | 106,000 | 128,000 |
| | | | Temperature rise range - °F | 50 - 80 | 50 - 80 | 55 - 85 |
| | | | Gas Manifold Pressure (in. w.g.) Nat. Gas / LPG/Propane | 3.5 / 10.0 | 3.5 / 10.0 | 3.5 / 10.0 |
| | Minimum | | Input - Btuh | 31,000 | 39,000 | 46,000 |
| | | | Output - Btuh | 30,000 | 38,000 | 45,000 |
| | | | Temperature rise range - °F | 25 - 55 | 35 - 65 | 35 - 65 |
| | | | Gas Manifold Pressure (in. w.g.) Nat. Gas / LPG/Propane | 0.5 / 1.5 | 0.5 / 1.5 | 0.5 / 1.5 |
| | | | High static - in. w.g. | 0.8 | 0.8 | 0.8 |
| Connections in. | | | Intake / [2] Exhaust Pipe (PVC) | 2 / 2 | 2 / 2 | 2 / 2 |
| | | | Gas pipe size IPS | 1/2 | 1/2 | 1/2 |
| | | | Condensate Drain Trap (PVC pipe) - i.d. | 3/4 | 3/4 | 3/4 |
| | | | with furnished 90° street elbow | 3/4 slip x 3/4 Mipt | 3/4 slip x 3/4 Mipt | 3/4 slip x 3/4 Mipt |
| | | | with field supplied (PVC coupling) - o.d. | 3/4 slip x 3/4 MPT | 3/4 slip x 3/4 MPT | 3/4 slip x 3/4 MPT |
| Indoor Blower | | | Wheel nominal diameter x width - in. | 11 x 11 | 11 x 11 | 11 x 11 |
| | | | Motor output - hp | 1 | 1 | 1 |
| | | | Tons of add-on cooling | 3 - 5 | 3 - 5 | 3.5 - 5 |
| | | | Air Volume Range - cfm | 530 - 2195 | 580 - 2125 | 646 - 2190 |
| Electrical Data | | | Voltage (Maximum Amps) | 120 volts - 60 Hertz - 1 phase | | |
| | | | Blower motor full load amps | 12.8 | 12.8 | 12.8 |
| | | | Maximum overcurrent protection | 20 | 20 | 20 |
| Shipping Data | | | lbs. - 1 package | 166 | 176 | 191 |

NOTE - Filters and provisions for mounting are not furnished and must be field provided.

[1] Annual Fuel Utilization Efficiency based on DOE test procedures and according to FTC labeling regulations. Isolated combustion system rating for non-weatherized furnaces.

[2] 2 in. Rubber Flue Coupling is furnished for exhaust pipe connection to unit.

## OPTIONAL ACCESSORIES - ORDER SEPARATELY

**NOTE - FURNACES CANNOT BE TWINNED!**

| | | | "B" Width Models | "C" Width Models | "D" Width Models |
|---|---|---|---|---|---|
| **CABINET ACCESSORIES** | | | | | |
| **Horizontal Suspension Kit - Horizontal only** | | | **51W10** | **51W10** | **51W10** |
| **Return Air Base - Upflow only** | | | **50W98** | **50W99** | **51W00** |
| **High Performance Economizer (Commercial Only)** | | | **10U53** | **10U53** | **10U53** |
| **CONDENSATE DRAIN KITS** | | | | | |
| **Condensate Drain Heat Cable** | | 6 ft. | **26K68** | **26K68** | **26K68** |
| | | 24 ft. | **26K69** | **26K69** | **26K69** |
| **Crawl Space Vent Drain Kit** | | US | **51W18** | **51W18** | **51W18** |
| | | Canada | **15Z70** | **15Z70** | **15Z70** |
| **CONTROLS** | | | | | |
| **S40 Smart Wi-Fi Thermostat** | | | **22V24** | **22V24** | **22V24** |
| **[1] Remote Outdoor Air Temperature Sensor** | | | **X2658** | **X2658** | **X2658** |
| **Transformer (75VA)** | | | **27J32** | **27J32** | **27J32** |
| **FILTER KITS** | | | | | |
| **[2] Air Filter and Rack Kit** | Horizontal (end) | | **87L96** | **87L97** | **87L98** |
| | | Size of filter - in. | 18 x 25 x 1 | 20 x 25 x 1 | 25 x 25 x 1 |
| | Side Return | Single | **44J22** | **44J22** | **44J22** |
| | | Ten Pack | **66K63** | **66K63** | **66K63** |
| | | Size of filter - in. | 16 x 25 x 1 | 16 x 25 x 1 | 16 x 25 x 1 |
| **TERMINATION KITS** | | | | | |
| Direct Vent Applications Only. See Installation Instructions for specific venting information. | | | | | |
| **Direct Vent** | Concentric | US - 2 in. | **71M80** | **69M29** | **- - -** |
| | | 3 in. | **- - -** | **60L46** | **60L46** |
| | | Canada - 2 in. | **44W92** | **44W92** | **- - -** |
| | | 3 in. | **- - -** | **44W93** | **44W93** |
| | Flush-Mount | US - 2, 2-1/2 or 3 in. | **51W11** | **51W11** | **51W11** |
| | | Canada - 2, 2-1/2 or 3 in. | **51W12** | **51W12** | **51W12** |
| | Wall - Close Couple | US - 2 in. | **22G44** | **- - -** | **- - -** |
| | | 3 in. | **44J40** | **44J40** | **44J40** |
| | Wall - Close Couple WTK | Canada - 2 in. | **30G28** | **- - -** | **- - -** |
| | | 3 in. | **81J20** | **81J20** | **81J20** |
| | Roof Termination Flashing Kit (no vent pipe - 2 flashings) | 2 in. | **15F75** | **15F75** | **- - -** |
| | | 3 in. | **44J41** | **44J41** | **44J41** |

[1] Remote Outdoor Temperature Sensor is used with conventional (non-Lennox® Communicating) outdoor units (sensor is furnished with Lennox® Communicating outdoor units). Allows the thermostat to display outdoor temperature. Required in dual-fuel and EDA applications.

[2] Cleanable polyurethane frame type filter.

NOTE - Termination Kits (**44W92, 44W93, 30G28, 51W12, 81J20**) and Crawl Space Vent Drain Kit (**15Z70**) are certified to ULC S636 standard for use in Canada only.

## GAS HEAT ACCESSORIES

| Input | High Altitude Pressure Switch Kit | Natural Gas to LPG/Propane Kit | Natural Gas to LPG/Propane Kit | High Altitude Conversion Kit Natural Gas | LPG/Propane to Natural Gas Kit | Muffler (US Only) |
|---|---|---|---|---|---|---|
| | 7501 - 10,000 ft. | 0 - 4500 ft. | 4501 - 10,000 ft. | 4501 - 10,000 ft. | 0 - 7500 ft. | |
| 070 | 14T65 | 65W77 | 65W77 | - - - | 70W87 | 15Y66 (2-inch) |
| 090XV36C/48C | 14T65 | 65W77 | 65W77 | - - - | 70W87 | 15Y66 (2-inch) |
| 090XV60C | 20A87 | 20A26 | 20A88 | 20A89 | - - - | 15Y66 (2-inch) |
| 110 | 14T65 | 65W77 | 65W77 | - - - | 70W87 | [1] 15Y66 (2-inch)<br>16A56 (3-inch) |
| 135 | 14T65 | 65W77 | 65W77 | - - - | 70W87 | 16A56 (3-inch) |

[1] Two-inch diameter muffler (**15Y66**) is optional for 110 input model with a maximum vent pipe length of up to 29 ft.
Three-inch diameter muffler (**16A56**) is optional for 110 input model with a minimum vent pipe length of 30 ft.

## REFRIGERANT DETECTION SYSTEM (RDS) COMPONENTS

| Description | | Order No. |
|---|---|---|
| Refrigerant Detection System (RDS) Coil Sensor Kit | | 26Z69 |
| Refrigerant Detection System (RDS) Blower Control Board | Any Lennox® Communicating Furnace or any Non-Communicating 24V Furnace (Universal) | 27A03 |
| | Any Non-Communicating 24V Furnace | 27A02 |

NOTE - Communicating Blower Control Board and Sensor can be used universally with Lennox® communicating furnace or any non-communicating 24 volt furnace.
Non-Communicating Blower Control Board and Sensor can be used with any non-communicating 24 volt furnace.

## OUTDOOR TERMINATION KIT USAGE

| Input Size | Vent Pipe Diameter (in.) | Standard Terminations | | | | Concentric Terminations | | |
|---|---|---|---|---|---|---|---|---|
| | | Flush Mount Kit | Wall Kit | | Field Fabricated Exhaust Accelerator Size Required | Concentric Kit | | |
| | | | 2 inch | 3 inch | | 1-1/2 inch | 2 inch | 3 inch |
| | | 51W11 (US) [5] 51W12 (CA) | 22G44 (US) [5] 30G28 (CA) | 44J40 (US) [5] 81J20 (CA) | | 71M80 (US) [5] 44W92 (CA) | 69M29 (US) [5] 44W92 (CA) | 60L46 (US) [5] 44W93 (CA) |
| 070 | [1] 1-1/2 | [4] YES | YES | [2] YES | 1-1/2 in. | [3] YES | | |
| | 2 | [4] YES | YES | [2] YES | 1-1/2 in. | [3] YES | - - - | - - - |
| | 2-1/2 | [4] YES | YES | [2] YES | 1-1/2 in. | [3] YES | - - - | - - - |
| | 3 | [4] YES | YES | [2] YES | 1-1/2 in. | [3] YES | - - - | - - - |
| 090 | 2 | [4] YES | - - - | YES | 2 in. | - - - | YES | YES |
| | 2-1/2 | [4] YES | - - - | YES | 2 in. | - - - | YES | YES |
| | 3 | [4] YES | - - - | YES | 2 in. | - - - | YES | YES |
| 110 | 2 | YES | - - - | YES | 2 in. | - - - | YES | YES |
| | 2-1/2 | YES | - - - | YES | 2 in. | - - - | YES | YES |
| | 3 | YES | - - - | YES | 2 in. | - - - | YES | YES |
| 135 | 3 | YES | - - - | YES | 2 in. | - - - | - - - | YES |

NOTE - Standard Terminations do not include any vent pipe or elbows external to the structure.
Any vent pipe or elbows external to the structure must be included in total vent length calculations. See Vent Length Tables.

NOTE - When using 1-1/2 inch piping with Concentric Kit or Flush Mount Kit pipe must be transitioned to 2 inch pipe.

[1] Requires 2 inch to 1-1/2 inch reducer, must be field provided.

[2] Requires field provided 1-1/2 in. outdoor exhaust accelerator.

[3] Concentric Kits **71M80** and **44W92** include 1-1/2 in. outdoor exhaust accelerator, required when used with 045 and 070 input models. Accelerator is not used with 090, 110, 135 input models.

[4] Flush Mount Kit **51W11** and **51W12** includes 1-1/2 in. outdoor exhaust accelerator, required when used with 045, 070 and 090 input models. Accelerator is not used with 110 or 135 input models.

[5] Termination Kits **30G28**, **44W92**, **44W93**, **51W12** and **81J20** are certified to ULC S636 standard for use in Canada only.

## VENT LENGTHS - UNINSULATED EXHAUST PIPE IN UNCONDITIONED SPACE

| [1] Winter Design Temperatures | Vent Pipe Diameter | Unit Input Size | | | | | | | |
|---|---|---|---|---|---|---|---|---|---|
| | | 070 | | 090 | | 110 | | 135 | |
| | | Maximum Uninsulated Exhaust Vent Length (ft.) | | | | | | | |
| | | PVC | PolyPro InnoFlue | PVC | PolyPro InnoFlue | PVC | PolyPro InnoFlue | PVC | PolyPro InnoFlue |
| 32 to 21°F | 1-1/2 inch | N/A | N/A | N/A | N/A | N/A | N/A | N/A | N/A |
| | 2 in. | 11 | 9 | 14 | 12 | 18 | 15 | N/A | N/A |
| | 2-1/2 in. | 7 | N/A | 10 | N/A | 12 | N/A | N/A | N/A |
| | 3 in. | N/A | N/A | 6 | 6 | 8 | 8 | 13 | 13 |
| 20 to 1°F | 1-1/2 inch | N/A | N/A | N/A | N/A | N/A | N/A | N/A | N/A |
| | 2 in. | N/A | N/A | 6 | 4 | 8 | 6 | N/A | N/A |
| | 2-1/2 in. | N/A | N/A | N/A | N/A | N/A | N/A | N/A | N/A |
| | 3 in. | N/A | N/A | N/A | N/A | N/A | N/A | N/A | N/A |
| 0 to –20°F | 1-1/2 inch | N/A | N/A | N/A | N/A | N/A | N/A | N/A | N/A |
| | 2 in. | N/A | N/A | N/A | N/A | N/A | N/A | N/A | N/A |
| | 2-1/2 in. | N/A | N/A | N/A | N/A | N/A | N/A | N/A | N/A |
| | 3 in. | N/A | N/A | N/A | N/A | N/A | N/A | N/A | N/A |

NOTE - Lengths shown are equivalent pipe lengths.
Concentric terminations are equivalent to 5 ft. of straight pipe and should be included when measuring total pipe length.
Elbows are equivalent to 5 ft. of straight pipe and should be included when measuring total pipe length.

[1] Refer to 99% Minimum Design Temperature table provided in the current edition of ASHRAE Handbook-Fundamentals.

PolyPro® poly-propylene vent pipe is a registered trademark of DuraVent®.

Innoflue® is a registered trademark of Centrotherm Eco Systems.

## VENT LENGTHS

### STANDARD TERMINATION AT ELEVATION 0 - 7500 ft.

| | Pipe Size | 1-1/2 in. | | | | 2 in. | | | | 2-1/2 in. | | | | 3 in. | | | |
|---|---|---|---|---|---|---|---|---|---|---|---|---|---|---|---|---|---|
| | Input | 070 | 090 | 110 | 135 | 070 | 090 | 110 | 135 | 070 | 090 | 110 | 135 | 070 | 090 | 110 | 135 |
| No. of 90 ELL | 1 | 20 | N/A | N/A | N/A | 91 | 69 | 14 | N/A | 140 | 93 | 43 | N/A | 162 | 143 | 118 | 114 |
| | 2 | 15 | N/A | N/A | N/A | 86 | 64 | 9 | N/A | 135 | 88 | 38 | N/A | 157 | 138 | 113 | 109 |
| | 3 | 10 | N/A | N/A | N/A | 81 | 59 | N/A | N/A | 130 | 83 | 33 | N/A | 152 | 133 | 108 | 104 |
| | 4 | N/A | N/A | N/A | N/A | 76 | 54 | N/A | N/A | 125 | 78 | 28 | N/A | 147 | 128 | 103 | 99 |
| | 5 | N/A | N/A | N/A | N/A | 71 | 49 | N/A | N/A | 120 | 73 | 23 | N/A | 142 | 123 | 98 | 94 |
| | 6 | N/A | N/A | N/A | N/A | 66 | 44 | N/A | N/A | 115 | 68 | 18 | N/A | 137 | 118 | 93 | 89 |
| | 7 | N/A | N/A | N/A | N/A | 61 | 39 | N/A | N/A | 110 | 63 | 13 | N/A | 132 | 113 | 88 | 84 |
| | 8 | N/A | N/A | N/A | N/A | 56 | 34 | N/A | N/A | 105 | 58 | N/A | N/A | 127 | 108 | 83 | 79 |
| | 9 | N/A | N/A | N/A | N/A | 51 | 29 | N/A | N/A | 100 | 53 | N/A | N/A | 122 | 103 | 78 | 74 |
| | 10 | N/A | N/A | N/A | N/A | 46 | 24 | N/A | N/A | 95 | 48 | N/A | N/A | 117 | 98 | 73 | 69 |

### STANDARD TERMINATION AT ELEVATION 7501 - 10,000 ft.

| | Pipe Size | 1-1/2 in. | | | | 2 in. | | | | 2-1/2 in. | | | | 3 in. | | | |
|---|---|---|---|---|---|---|---|---|---|---|---|---|---|---|---|---|---|
| | Input | 070 | 090 | 110 | 135 | 070 | 090 | 110 | 135 | 070 | 090 | 110 | 135 | 070 | 090 | 110 | 135 |
| No. of 90 ELL | 1 | 12 | N/A | N/A | N/A | 66 | 44 | N/A | N/A | 115 | 68 | N/A | N/A | 137 | 118 | 93 | 89 |
| | 2 | 7 | N/A | N/A | N/A | 61 | 39 | N/A | N/A | 110 | 63 | N/A | N/A | 132 | 113 | 88 | 84 |
| | 3 | N/A | N/A | N/A | N/A | 56 | 34 | N/A | N/A | 105 | 58 | N/A | N/A | 127 | 108 | 83 | 79 |
| | 4 | N/A | N/A | N/A | N/A | 51 | 29 | N/A | N/A | 100 | 53 | N/A | N/A | 122 | 103 | 78 | 74 |
| | 5 | N/A | N/A | N/A | N/A | 46 | 24 | N/A | N/A | 95 | 48 | N/A | N/A | 117 | 98 | 73 | 69 |
| | 6 | N/A | N/A | N/A | N/A | 41 | 19 | N/A | N/A | 90 | 43 | N/A | N/A | 112 | 93 | 68 | 64 |
| | 7 | N/A | N/A | N/A | N/A | 36 | 14 | N/A | N/A | 85 | 38 | N/A | N/A | 107 | 88 | 63 | 59 |
| | 8 | N/A | N/A | N/A | N/A | 31 | N/A | N/A | N/A | 80 | 33 | N/A | N/A | 102 | 83 | 58 | 54 |
| | 9 | N/A | N/A | N/A | N/A | 26 | N/A | N/A | N/A | 75 | 28 | N/A | N/A | 97 | 78 | 53 | 49 |
| | 10 | N/A | N/A | N/A | N/A | 21 | N/A | N/A | N/A | 70 | 23 | N/A | N/A | 92 | 73 | 48 | 44 |

### CONCENTRIC TERMINATION ELEVATION 0 - 7500 ft.

| | Pipe Size | 1-1/2 in. | | | | 2 in. | | | | 2-1/2 in. | | | | 3 in. | | | |
|---|---|---|---|---|---|---|---|---|---|---|---|---|---|---|---|---|---|
| | Input | 070 | 090 | 110 | 135 | 070 | 090 | 110 | 135 | 070 | 090 | 110 | 135 | 070 | 090 | 110 | 135 |
| No. of 90 ELL | 1 | 15 | N/A | N/A | N/A | 83 | 67 | 12 | N/A | 130 | 89 | 39 | N/A | 146 | 139 | 114 | 105 |
| | 2 | 10 | N/A | N/A | N/A | 78 | 62 | 7 | N/A | 125 | 84 | 34 | N/A | 141 | 134 | 109 | 100 |
| | 3 | N/A | N/A | N/A | N/A | 73 | 57 | N/A | N/A | 120 | 79 | 29 | N/A | 136 | 129 | 104 | 95 |
| | 4 | N/A | N/A | N/A | N/A | 68 | 52 | N/A | N/A | 115 | 74 | 24 | N/A | 131 | 124 | 99 | 90 |
| | 5 | N/A | N/A | N/A | N/A | 63 | 47 | N/A | N/A | 110 | 69 | 19 | N/A | 126 | 119 | 94 | 85 |
| | 6 | N/A | N/A | N/A | N/A | 58 | 42 | N/A | N/A | 105 | 64 | 14 | N/A | 121 | 114 | 89 | 80 |
| | 7 | N/A | N/A | N/A | N/A | 53 | 37 | N/A | N/A | 100 | 59 | N/A | N/A | 116 | 109 | 84 | 75 |
| | 8 | N/A | N/A | N/A | N/A | 48 | 32 | N/A | N/A | 95 | 54 | N/A | N/A | 111 | 104 | 79 | 70 |
| | 9 | N/A | N/A | N/A | N/A | 43 | 27 | N/A | N/A | 90 | 49 | N/A | N/A | 106 | 99 | 74 | 65 |
| | 10 | N/A | N/A | N/A | N/A | 38 | 22 | N/A | N/A | 85 | 44 | N/A | N/A | 101 | 94 | 69 | 60 |

### CONCENTRIC TERMINATION ELEVATION 7501 - 10,000 ft.

| | Pipe Size | 1-1/2 in. | | | | 2 in. | | | | 2-1/2 in. | | | | 3 in. | | | |
|---|---|---|---|---|---|---|---|---|---|---|---|---|---|---|---|---|---|
| | Input | 070 | 090 | 110 | 135 | 070 | 090 | 110 | 135 | 070 | 090 | 110 | 135 | 070 | 090 | 110 | 135 |
| No. of 90 ELL | 1 | 10 | N/A | N/A | N/A | 58 | 42 | N/A | N/A | 105 | 64 | N/A | N/A | 121 | 114 | 89 | 80 |
| | 2 | N/A | N/A | N/A | N/A | 53 | 37 | N/A | N/A | 100 | 59 | N/A | N/A | 116 | 109 | 84 | 75 |
| | 3 | N/A | N/A | N/A | N/A | 48 | 32 | N/A | N/A | 95 | 54 | N/A | N/A | 111 | 104 | 79 | 70 |
| | 4 | N/A | N/A | N/A | N/A | 43 | 27 | N/A | N/A | 90 | 49 | N/A | N/A | 106 | 99 | 74 | 65 |
| | 5 | N/A | N/A | N/A | N/A | 38 | 22 | N/A | N/A | 85 | 44 | N/A | N/A | 101 | 94 | 69 | 60 |
| | 6 | N/A | N/A | N/A | N/A | 33 | 17 | N/A | N/A | 80 | 39 | N/A | N/A | 96 | 89 | 64 | 55 |
| | 7 | N/A | N/A | N/A | N/A | 28 | 12 | N/A | N/A | 75 | 34 | N/A | N/A | 91 | 84 | 59 | 50 |
| | 8 | N/A | N/A | N/A | N/A | 23 | N/A | N/A | N/A | 70 | 29 | N/A | N/A | 86 | 79 | 54 | 45 |
| | 9 | N/A | N/A | N/A | N/A | 18 | N/A | N/A | N/A | 65 | 24 | N/A | N/A | 81 | 74 | 49 | 40 |
| | 10 | N/A | N/A | N/A | N/A | 13 | N/A | N/A | N/A | 60 | 19 | N/A | N/A | 76 | 69 | 44 | 35 |

## INSTALLATION CLEARANCES

| | |
|---|---|
| Sides | [1] 0 inches (0 mm) |
| Rear | 0 inches (0 mm) |
| Top/Plenum | 1 inch (25 mm) |
| Front | 0 inches (0 mm) |
| Front (service/alcove) | 24 inches (610 mm) |
| Floor | [2] Combustible |

**NOTE** - Air for combustion must conform to the methods outlined in the National Fuel Gas Code (NFPA 54/ANSI-Z223.1) or the National Standard of Canada CAN/CSA-B149.1 “Natural Gas and Propane Installation Code”.

**NOTE** - In the U.S. flue sizing must conform to the methods outlined in the current National Fuel Gas Code (NFPA 54/ANSI-Z223.1) or applicable provisions of local building codes. In Canada flue sizing must conform to the methods outlined in National Standard of Canada CAN/CSA-B149.1.

[1] Allow proper clearances to accommodate condensate trap and vent pipe installation.

[2] Do not install the furnace directly on carpeting, tile, or other combustible materials other than wood flooring.

## DIMENSIONS - UNIT - UPFLOW POSITION

[1] NOTE - 60C and 60D size units that require air volumes over 1800 cfm must have one of the following:
1. Single side return air and Optional Return Air Base with transition that must accommodate required 20 x 25 x 1 inch (508 x 635 x 25 mm) air filter to maintain proper velocity.
2. Bottom return air.
3. Return air from both sides.
4. Bottom and one side return air.

See Blower Performance Tables for additional information.

[2] Optional Side Return Air Filter Kit is not for use with the Optional Return Air Base.

**Flue Condensate Trap Assembly**
Furnished for external field installation on either side of unit. (See installation instructions for additional information.)

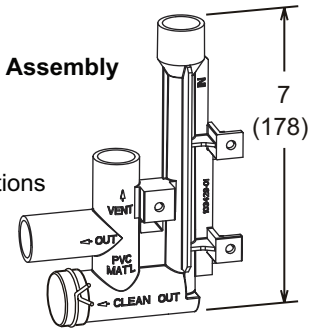


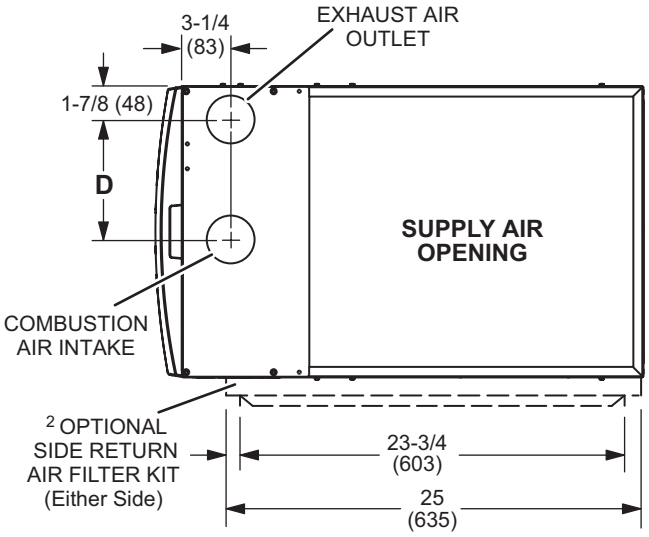


**TOP VIEW**

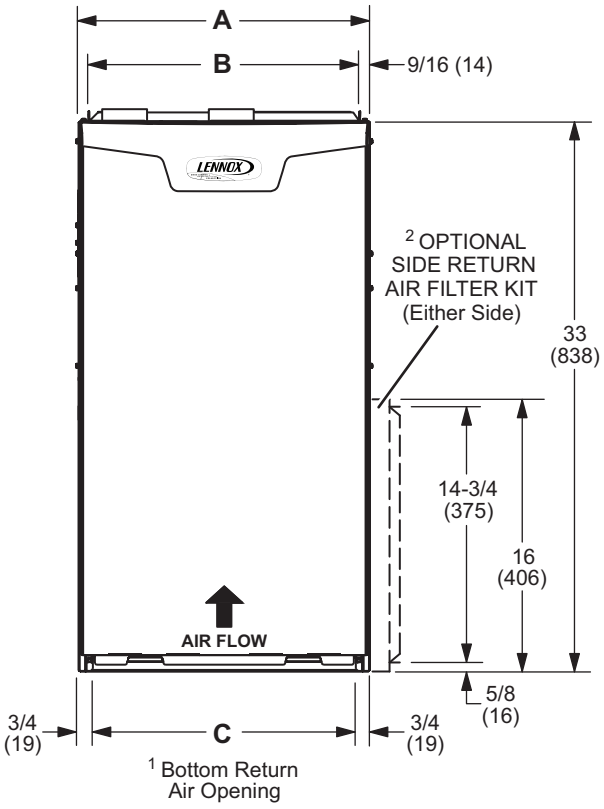


**FRONT VIEW**

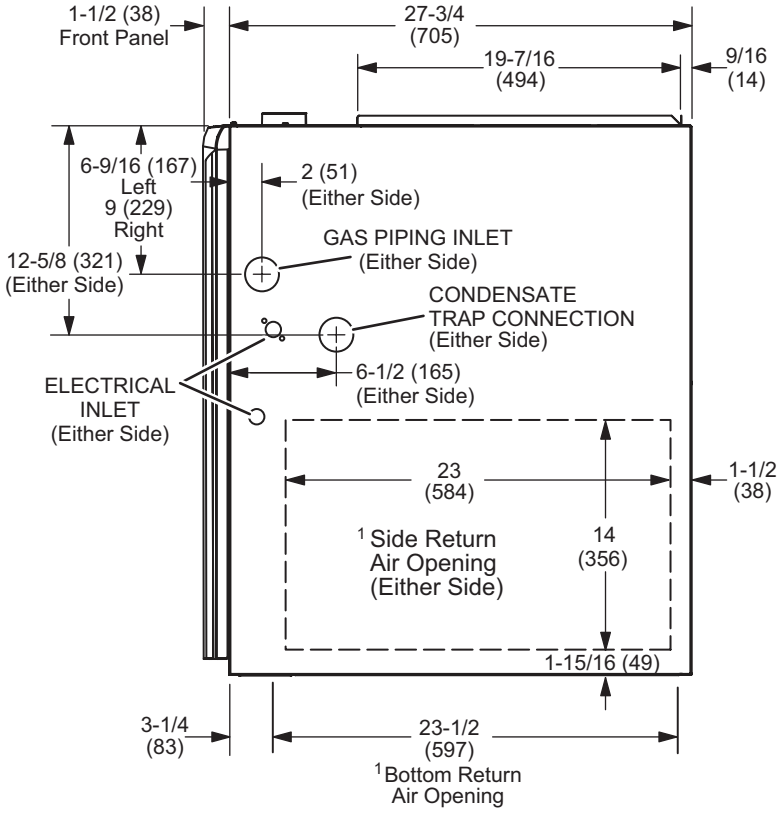


**SIDE VIEW**

| Model No. | A | | B | | C | | D | |
|---|---|---|---|---|---|---|---|---|
| | in. | mm | in. | mm | in. | mm | in. | mm |
| SLP99UH070XV36B | 17-1/2 | 446 | 16-3/8 | 416 | 16 | 406 | 7-5/8 | 194 |
| SLP99UH090XV36C<br>SLP99UH090XV48C<br>SLP99UH090XV60C<br>SLP99UH110XV60C | 21 | 533 | 19-7/8 | 505 | 19-1/2 | 495 | 9-3/8 | 238 |
| SLP99UH135XV60D | 24-1/2 | 622 | 23-3/8 | 594 | 23 | 584 | 11-1/8 | 283 |

## DIMENSIONS - UNIT - HORIZONTAL POSITION

### LEFT-HAND AIR DISCHARGE

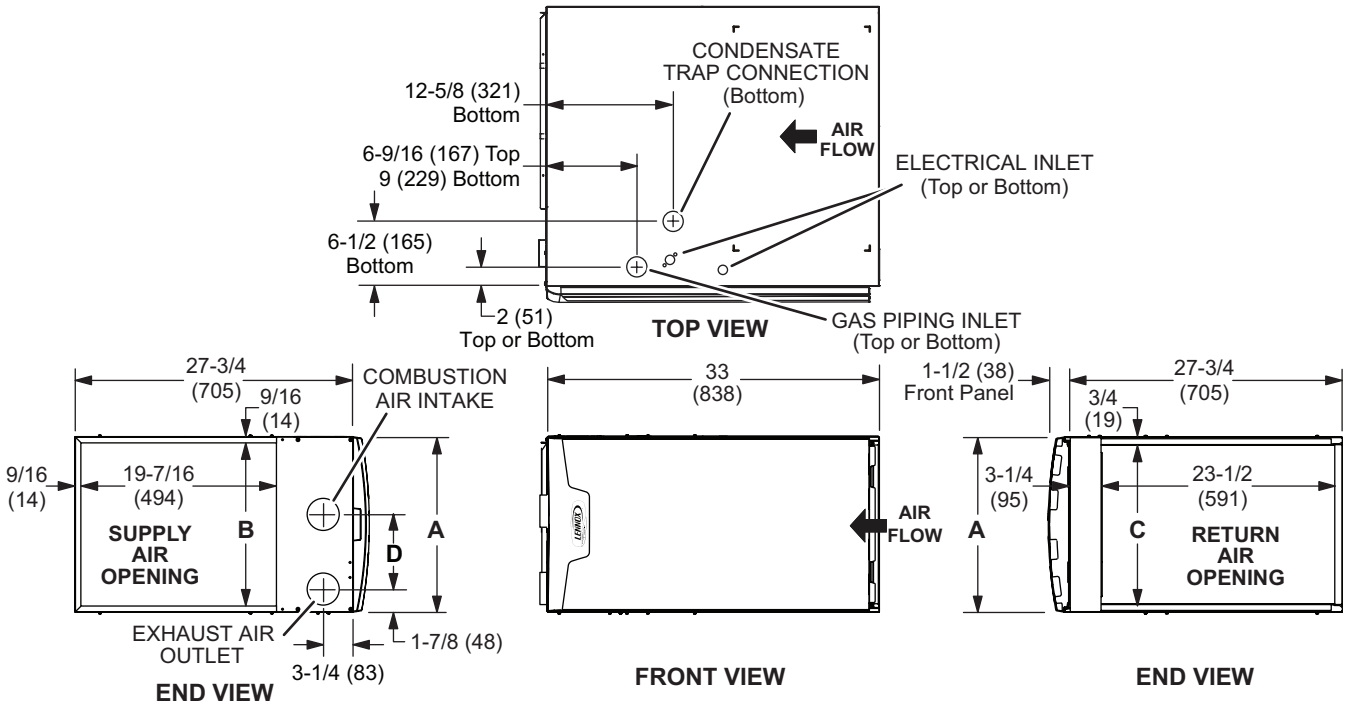


### RIGHT-HAND AIR DISCHARGE

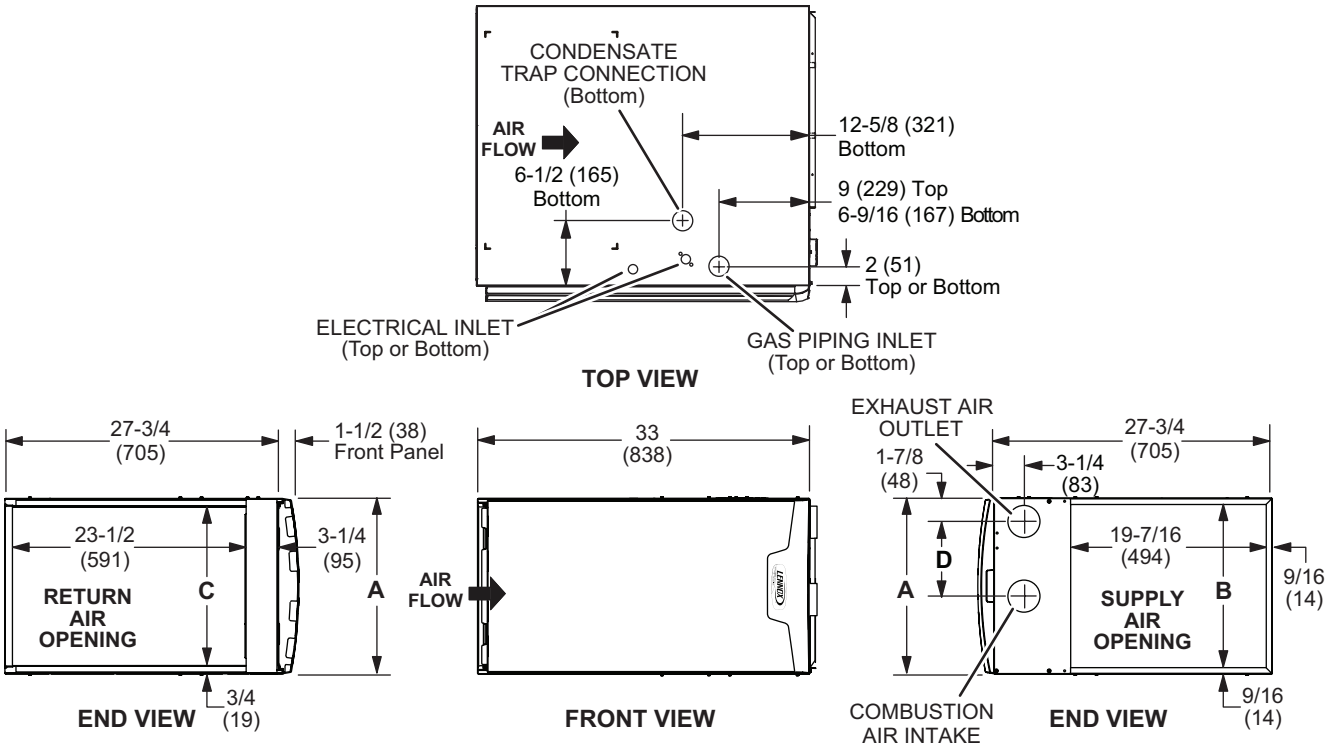


| Model No. | A | | B | | C | | D | |
|---|---|---|---|---|---|---|---|---|
| | in. | mm | in. | mm | in. | mm | in. | mm |
| SLP99UH070XV36B | 17-1/2 | 446 | 16-3/8 | 416 | 16 | 406 | 7-5/8 | 194 |
| SLP99UH090XV36C<br>SLP99UH090XV48C<br>SLP99UH090XV60C<br>SLP99UH110XV60C | 21 | 533 | 19-7/8 | 505 | 19-1/2 | 495 | 9-3/8 | 238 |
| SLP99UH135XV60D | 24-1/2 | 622 | 23-3/8 | 594 | 23 | 584 | 11-1/8 | 283 |

## HORIZONTAL (END) FILTER KIT

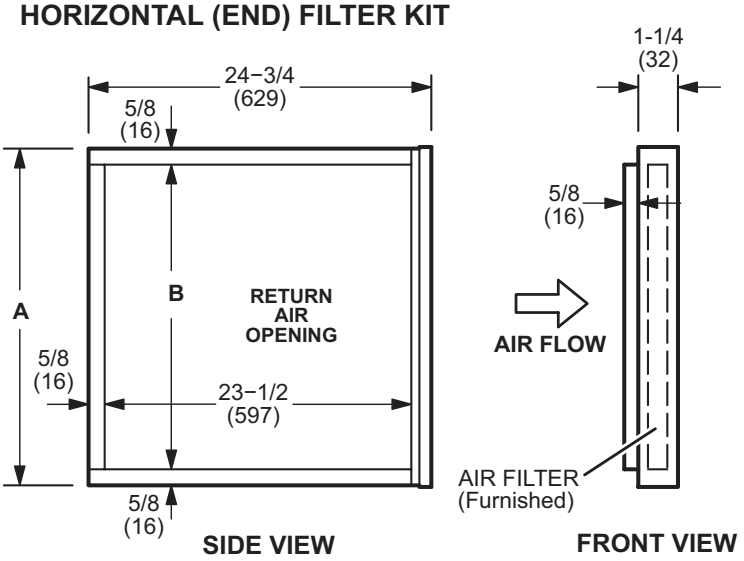


| Furnace Cabinet Width | Catalog Number | A | | B | |
|---|---|---|---|---|---|
| | | in. | mm | in. | mm |
| B | 87L96 | 18 | 457 | 16-3/4 | 425 |
| C | 87L97 | 21 | 533 | 18-3/4 | 476 |
| D | 87L98 | 25 | 635 | 23-3/4 | 603 |

## OPTIONAL RETURN AIR BASE
## (Upflow Applications Only - For use with B, C and D cabinets)

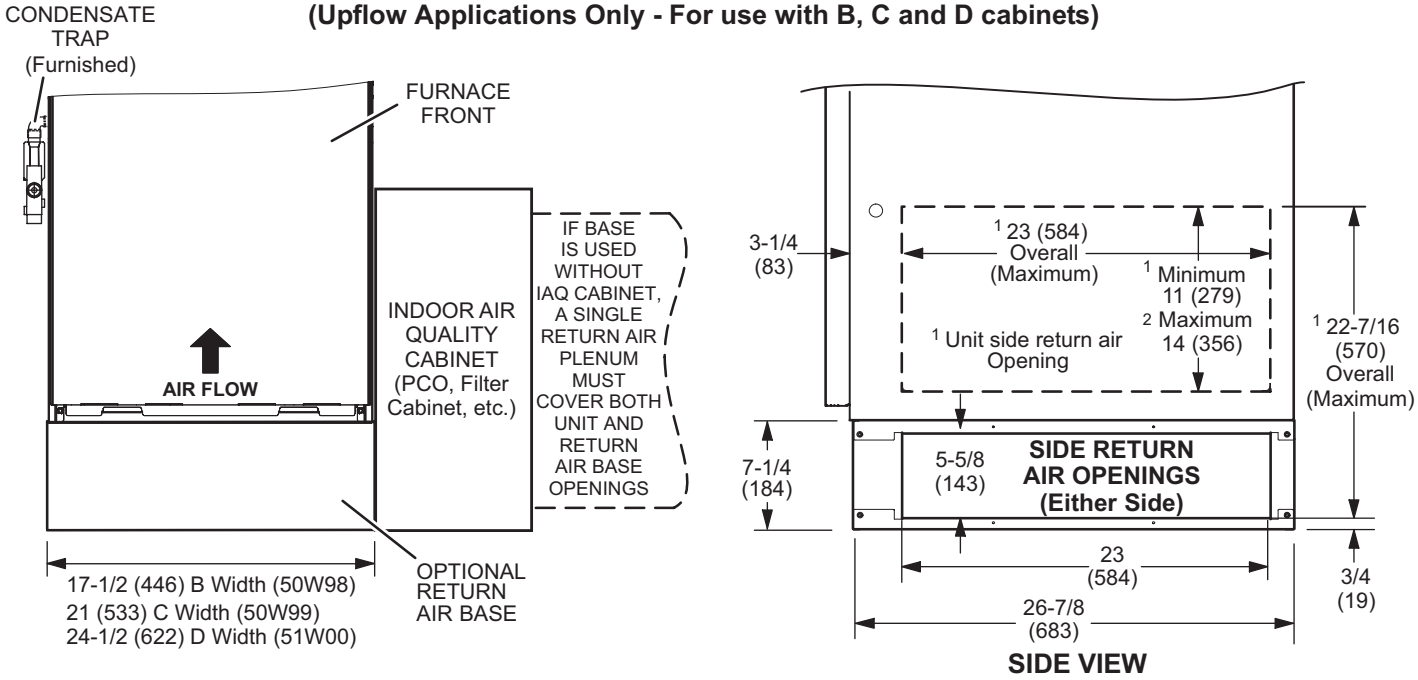


**NOTE- Optional Side Return Air Filter Kits are not for use with Optional Return Air Base.**

**[1] Both the unit return air opening and the base return air opening must be covered by a single plenum or IAQ cabinet. Minimum unit side return air opening dimensions for units requiring 1800 cfm or more of air (W x H): 23 x 11 in. (584 x 279 mm). The opening can be cut as needed to accommodate plenum or IAQ cabinet while maintaining dimensions shown. Side return air openings must be cut in the field. There are cutting guides stenciled on the cabinet for the side return air opening. The size of the opening must not extend beyond the markings on the furnace cabinet.**

**[2] To minimize pressure drop, the largest opening height possible, up to 14 in. (356 mm), is preferred.**

## DIMENSIONS - FURNACE/COIL COMBINED DIMENSIONS

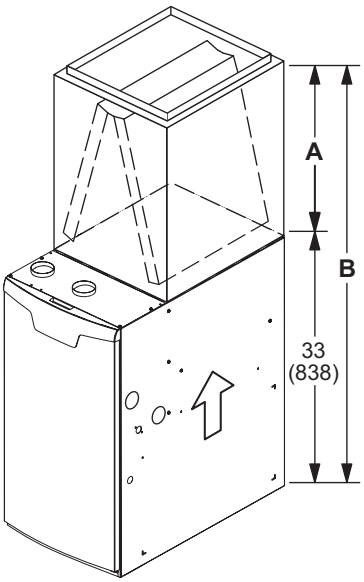


**UPFLOW POSITION - CASED**

| Model | | A | | B | |
|---|---|---|---|---|---|
| **CK40CT** | **C35/CX35** | **in.** | **mm** | **in.** | **mm** |
| CK40CT-18/24B | C35/CX35-18/24B | 16-1/2 | 419 | 49-1/2 | 1257 |
| CK40CT-24B | C35/CX35-24B | 18-1/2 | 470 | 51-1/2 | 1308 |
| CK40CT-30B | C35/CX35-30B | 22-1/2 | 572 | 55-1/2 | 1410 |
| CK40CT-30/36B<br>CK40CT-30/36C | C35/CX35-30/36B<br>C35/CX35-30/36C | 24-1/2 | 622 | 57-1/2 | 1461 |
| CK40CT-36B | C35/CX35-36B | 24-1/2 | 622 | 57-1/2 | 1461 |
| CK40CT-48B<br>CK40CT-48C | C35/CX35-48B<br>C35/CX35-48C | 27-1/2 | 699 | 60-1/2 | 1537 |
| CK40CT-49C | C35/CX35-49C | 29-1/2 | 749 | 62-1/2 | 1588 |
| CK40CT-50/60C | C35/CX35-50/60C | 27-1/2 | 699 | 60-1/2 | 1537 |
| CK40CT-60C | CX35-60C | 31-1/2 | 800 | 64-1/2 | 1638 |
| CK40CT-60D | CX35-60D | 29-1/2 | 749 | 62-1/2 | 1588 |

**UPFLOW POSITION - UNCASED**

| Model | | A | | B | |
|---|---|---|---|---|---|
| **CK40UT** | **C35** | **in.** | **mm** | **in.** | **mm** |
| CK40UT-18/24B | C35-18/24B | 14-1/8 | 359 | 47-1/8 | 1197 |
| CK40UT-24B | C35-24B | 16-3/8 | 416 | 49-3/8 | 1254 |
| CK40UT-30B | C35-30B | 20-3/4 | 527 | 53-3/4 | 1365 |
| CK40UT-30/36B<br>CK40UT-30/36C | C35-30/36B<br>C35-30/36C | 22-1/4 | 565 | 55-1/4 | 1403 |
| CK40UT-36B | C35-36B | 22-3/8 | 568 | 55-3/8 | 1407 |
| CK40UT-48B<br>CK40UT-48C | C35-48B<br>C35-48C | 26-1/4 | 667 | 59-1/4 | 1505 |
| CK40UT-49C | C35-49C | 28-1/2 | 724 | 61-1/2 | 1562 |
| CK40UT-50/60C | C35-50/60C | 25-7/8 | 657 | 58-7/8 | 1495 |
| CK40UT-60C | C35-60C | 30-5/8 | 778 | 63-5/8 | 1616 |
| CK40UT-60D | C35-60D | 28 | 711 | 61 | 1549 |

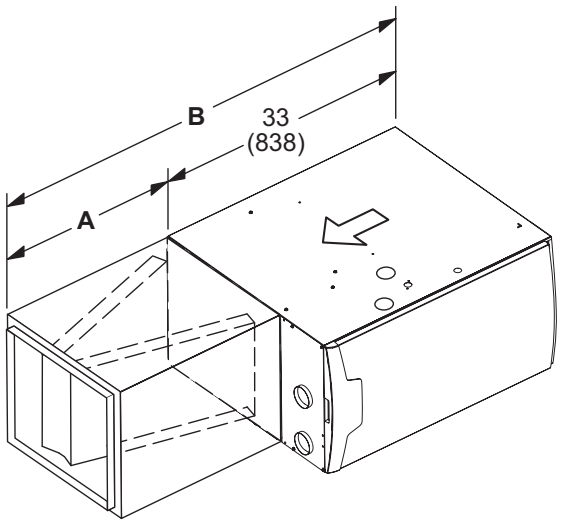


**HORIZONTAL POSITION**

| Model | | A | | B | |
|---|---|---|---|---|---|
| **CK40HT** | **CHX35** | **in.** | **mm** | **in.** | **mm** |
| CK40HT-24B<br>CK40HT-30B<br>CK40HT-36B<br>CK40HT-36C<br>CK40HT-42C<br>CK40HT-48C | CHX35-24B<br>CHX35-30B<br>CHX35-36B<br>CHX35-36C<br>CHX35-42C<br>CHX35-48C | 26-1/2 | 673 | 59-1/2 | 1511 |
| CK40CT-42B<br>CK40CT-48B<br>CK40CT-51<br>CK40CT-60D | CHX35-42B<br>CHX35-48B<br>CHX35-51<br>CHX35-60D | 31-1/2 | 880 | 64-1/2 | 1638 |

**FLUSH-MOUNT VENT TERMINATION KIT 51W11 (US) or 51W12 (CANADA)**

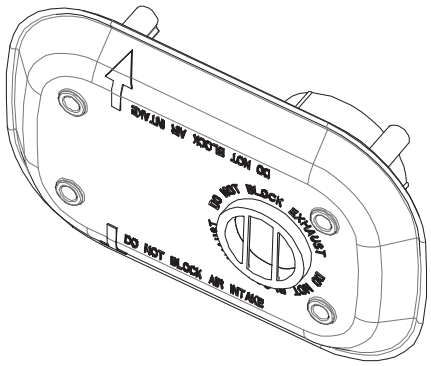


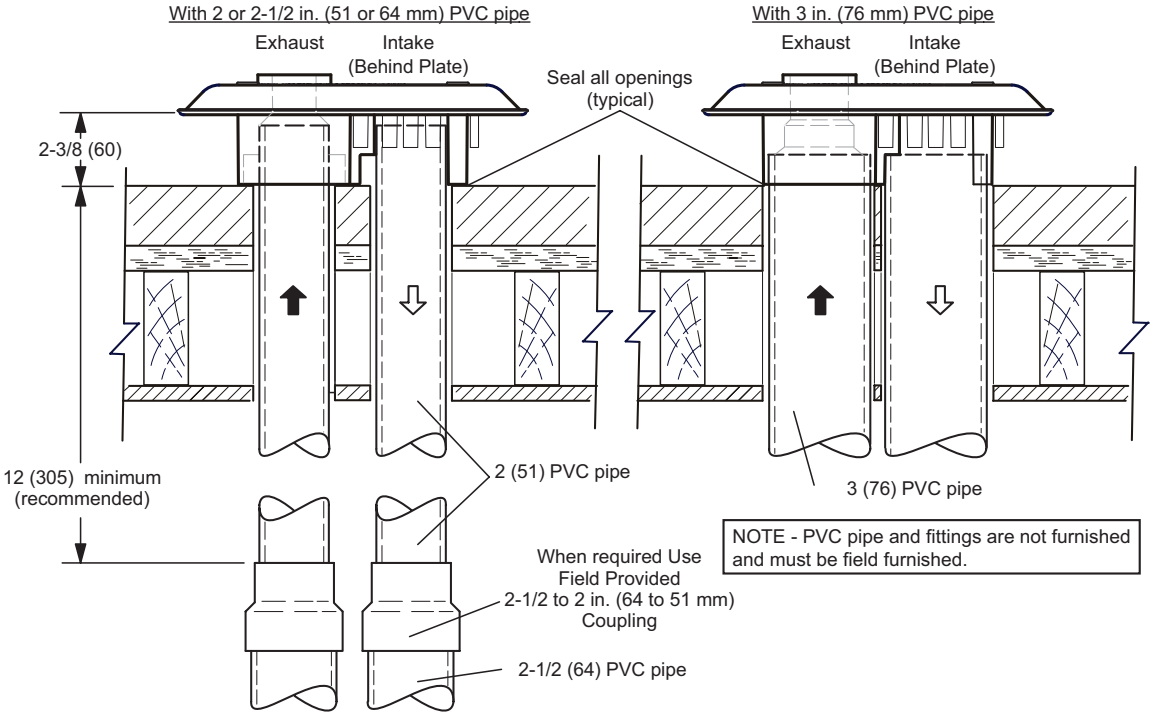


NOTE - PVC pipe and fittings are not furnished and must be field furnished.

**MUFFLERS**
**15Y66 - 2-inch**
**16A56 - 3-inch**

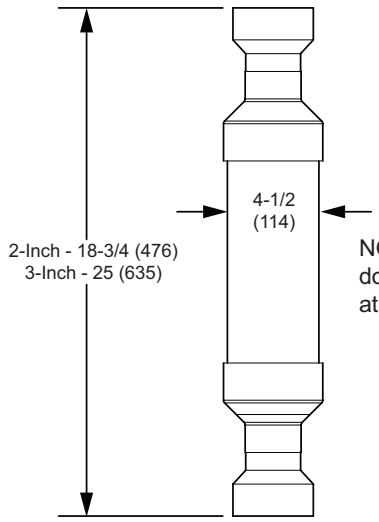


(Installed Vertically in the Exhaust Pipe)

NOTE - Two-inch mufflers do not have reducers at each end.

## CONCENTRIC WALL TERMINATION APPLICATIONS

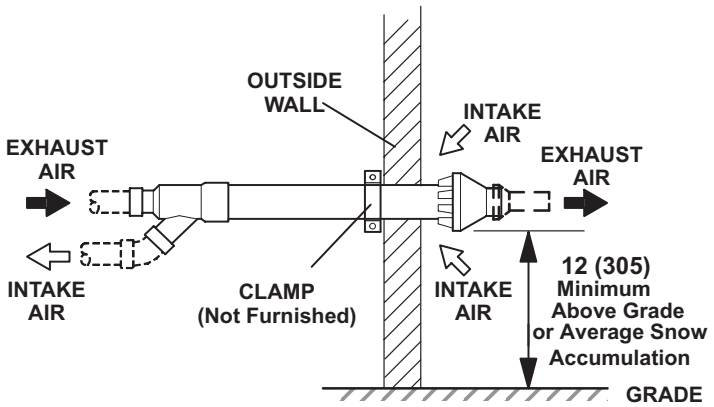


## CONCENTRIC ROOF TERMINATION APPLICATIONS

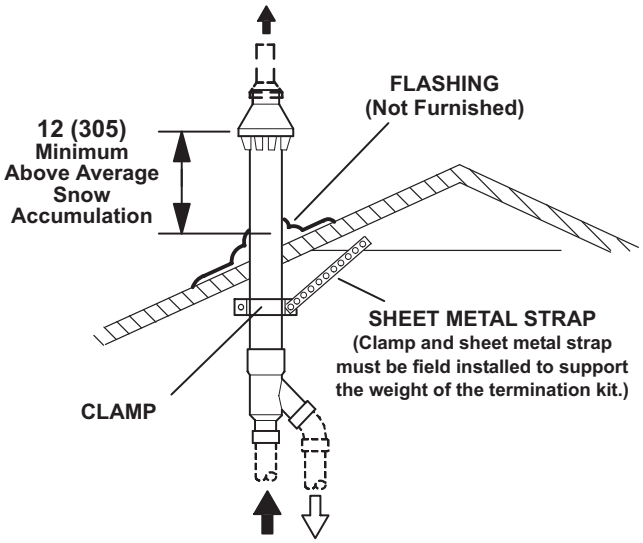


**71M80 / 69M29 / 44W92 − 2 inch kits**
**60L46 / 44W93 − 3 inch kits**
**See Installation Instructions for additional information.**

Note - Field provided reducer may be required to adapt different vent pipe sizes to termination.

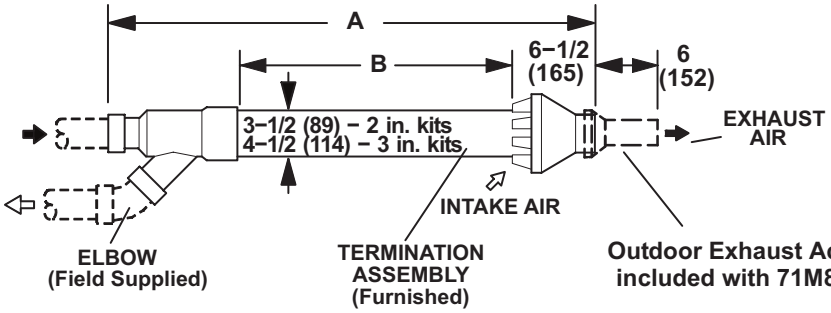


| Cat. No. | A | | B | |
|---|---|---|---|---|
| | in. | mm | in. | mm |
| 71M80 69M29 | 33−3/8 | 848 | 16−3/4 | 425 |
| 44W92 (Canada) | 29 | 737 | 15−1/2 | 394 |
| 60L46 | 38−7/8 | 987 | 21−3/16 | 538 |
| 44W93 (Canada) | 36−1/8 | 918 | 19−1/2 | 495 |

**NOTE − Typical illustration for dimensions only. Design may vary depending on kit ordered.**

## WALL TERMINATION KITS (CLOSE-COUPLE)
## EXTENDED VENT FOR GRADE CLEARANCE
## 2 inch (51 mm) 22G44 (US)
## 3 inch (76 mm) 44J40 (US)
## See Installation Instructions for additional information.

Note - Field provided reducer may be required to adapt different vent pipe sizes to termination.

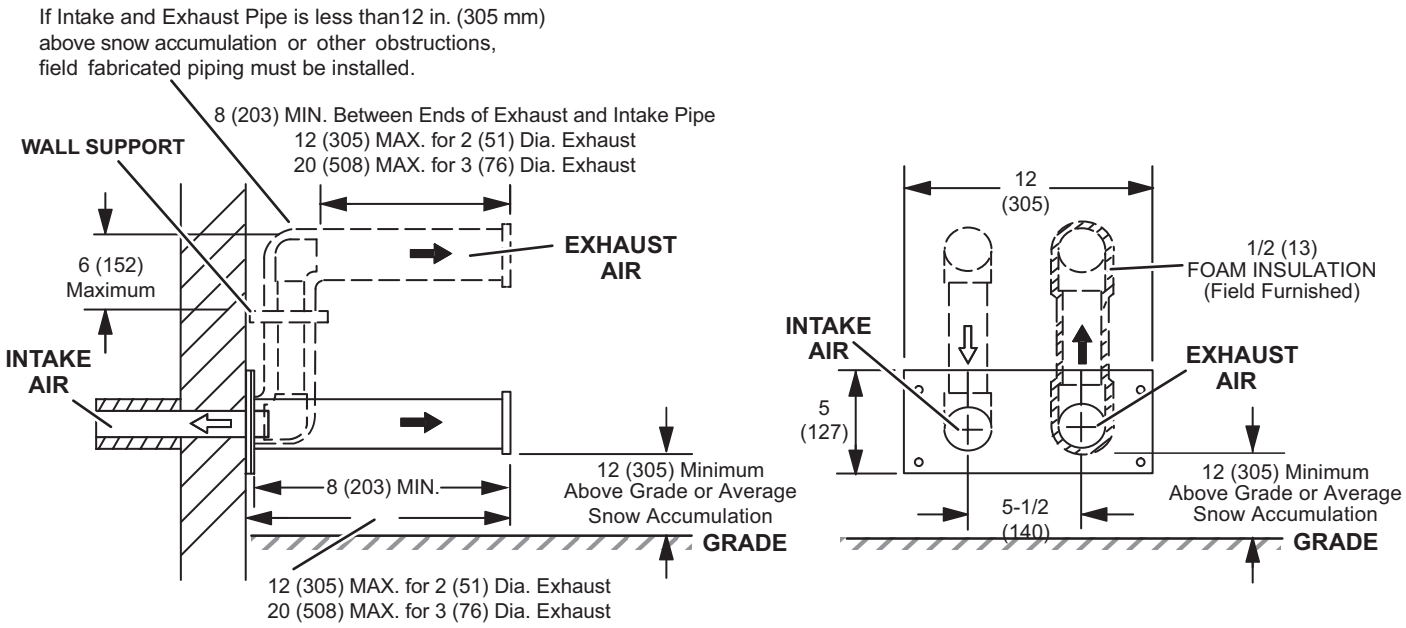


## WALL TERMINATION KITS (CLOSE-COUPLE)
## EXTENDED VENT FOR GRADE CLEARANCE
## 2 inch (51 mm) 30G28 (WTK Canada)
## 3 inch (76 mm) 81J20 (WTK Canada)
## See Installation Instructions for additional information.

Note - Field provided reducer may be required to adapt different vent pipe sizes to termination.

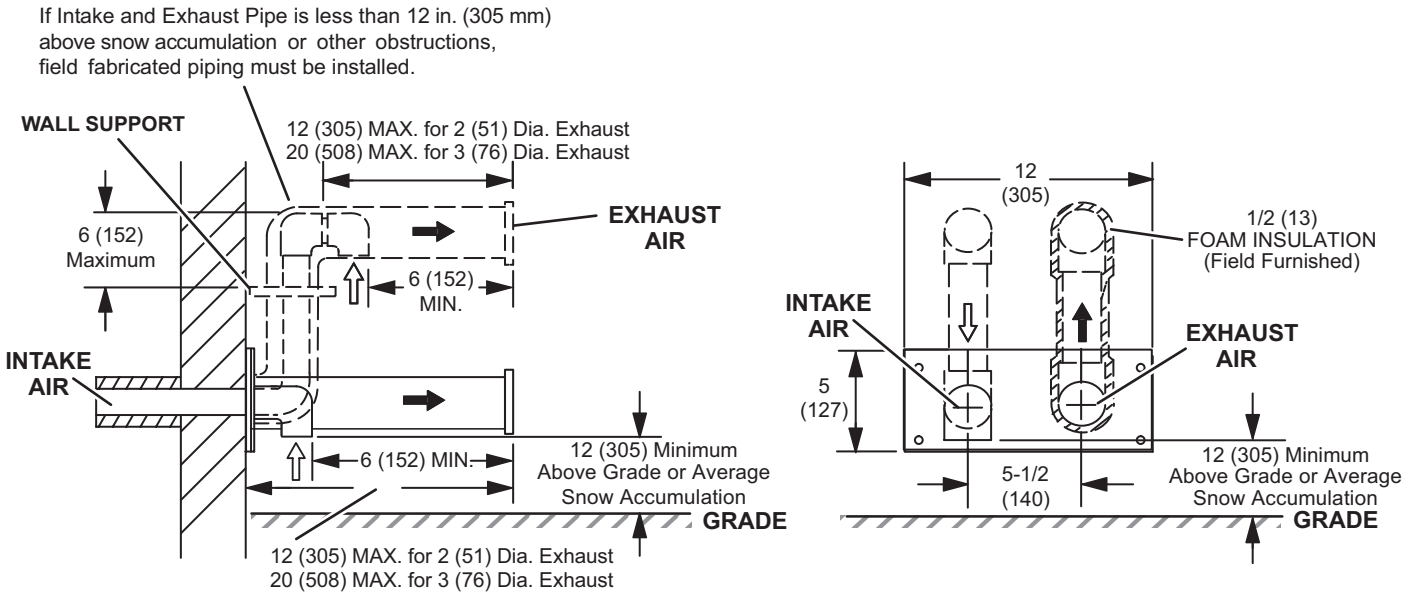

## BLOWER DATA

**SLP99UH070XV36B BLOWER PERFORMANCE (less filter)**

**BOTTOM RETURN AIR**

**HEATING BLOWER PERFORMANCE - 0 through 0.8 in. w.g. External Static Pressure Range**

| Heating Adjust CFM Selections | Heating Input Range and Blower Volume - CFM | | | | | | | |
|---|---|---|---|---|---|---|---|---|
| | 35% | 40% | 50% | 60% | 70% | 80% | 90% | 100% |
| Increase (+15%) Heat CFM | 489 | 538 | 636 | 735 | 833 | 931 | 1030 | 1128 |
| Increase (+7.5%) Heat CFM | 450 | 496 | 588 | 680 | 772 | 864 | 956 | 1048 |
| Default Heat CFM | 410 | 453 | 539 | 624 | 710 | 796 | 881 | 967 |
| Decrease (-7.5% ) Heat CFM | 380 | 419 | 498 | 578 | 657 | 736 | 815 | 895 |
| Decrease (-15% ) Heat CFM | 349 | 385 | 458 | 531 | 604 | 676 | 749 | 822 |

**COOLING BLOWER PERFORMANCE - 0 through 1.0 in. w.g. External Static Pressure Range**

| Cooling Adjust CFM Selections | Blower Speed Selections | | | | | | | |
|---|---|---|---|---|---|---|---|---|
| | First Stage Cool Speed - cfm | | | | Second Stage Cool Speed - cfm | | | |
| | Low | Medium-Low | Medium High | High (Default) | Low | Medium-Low | Medium High | High (Default) |
| Increase (+10%) Cool CFM | 610 | 745 | 865 | 995 | 900 | 1070 | 1235 | 1405 |
| Default Cool CFM | 560 | 675 | 785 | 890 | 810 | 970 | 1125 | 1265 |
| Decrease (-10%) Cool CFM | 510 | 615 | 700 | 795 | 720 | 875 | 1015 | 1145 |

The effect of static pressure is included in air volumes shown.

The following control configurations are available. See Installation Instructions for details and DIP switch settings.

**Heat Modes Available (Heating Blower Performance Table):**

Single stage thermostat:

- 35%, 70%, 100% input (three-stage) with time delays in-between.

Two-stage thermostat:

- Variable Rate Capacity Mode - furnace automatically adjusts firing rate based on first- and second-stage cycle times.
- W1 demand at 70% input, W2 demand at 100% input. No delay between stages.

**Cool Mode Available (Cooling Blower Performance table):**

First stage COOL (two-stage air conditioning units only) is approximately 70% of the same second stage COOL speed position.
Continuous Fan speeds are approximately 28% and 38% (DIP switch selectable) of the same second-stage COOL speed position.
minimum 250 cfm.

Lennox® Smart Zoning System Applications - Minimum blower speed is 250 cfm.

**SLP99UH070XV36B BLOWER MOTOR WATTS - COOLING**

| Blower Speed Options | Motor Watts @ Various External Static Pressures - in. wg. | | | | | | | | | | | | | | | | | | | |
|---|---|---|---|---|---|---|---|---|---|---|---|---|---|---|---|---|---|---|---|---|
| | First Stage | | | | | | | | | | Second Stage | | | | | | | | | |
| | 0.1 | 0.2 | 0.3 | 0.4 | 0.5 | 0.6 | 0.7 | 0.8 | 0.9 | 1.0 | 0.1 | 0.2 | 0.3 | 0.4 | 0.5 | 0.6 | 0.7 | 0.8 | 0.9 | 1.0 |
| **Increase (+10%) Cool CFM** | | | | | | | | | | | | | | | | | | | | |
| Low | 44 | 58 | 72 | 85 | 97 | 109 | 122 | 135 | 149 | 161 | 91 | 112 | 131 | 150 | 169 | 186 | 204 | 221 | 236 | 258 |
| Medium-Low | 63 | 79 | 96 | 112 | 128 | 144 | 160 | 173 | 187 | 206 | 149 | 170 | 191 | 210 | 229 | 248 | 266 | 284 | 301 | 323 |
| Medium-High | 83 | 104 | 123 | 143 | 161 | 179 | 194 | 211 | 227 | 248 | 219 | 241 | 264 | 284 | 305 | 325 | 345 | 365 | 386 | 408 |
| High | 120 | 141 | 108 | 126 | 144 | 162 | 178 | 193 | 208 | 211 | 309 | 332 | 356 | 381 | 401 | 420 | 441 | 462 | 482 | 506 |
| **Default Cool CFM** | | | | | | | | | | | | | | | | | | | | |
| Low | 39 | 52 | 65 | 77 | 88 | 100 | 112 | 125 | 136 | 148 | 72 | 89 | 108 | 126 | 144 | 162 | 178 | 193 | 208 | 228 |
| Medium-Low | 53 | 68 | 82 | 97 | 112 | 125 | 138 | 152 | 167 | 181 | 114 | 135 | 154 | 173 | 192 | 210 | 228 | 246 | 262 | 283 |
| Medium-High | 67 | 85 | 103 | 120 | 137 | 154 | 170 | 185 | 200 | 219 | 173 | 194 | 215 | 234 | 253 | 270 | 291 | 311 | 327 | 348 |
| High | 91 | 111 | 129 | 149 | 168 | 187 | 204 | 219 | 234 | 256 | 239 | 260 | 281 | 300 | 323 | 344 | 365 | 386 | 403 | 426 |
| **Decrease (-10%) Cool CFM** | | | | | | | | | | | | | | | | | | | | |
| Low | 34 | 47 | 58 | 69 | 80 | 92 | 103 | 114 | 124 | 136 | 58 | 74 | 90 | 106 | 122 | 137 | 152 | 166 | 180 | 197 |
| Medium-Low | 45 | 58 | 72 | 85 | 98 | 110 | 123 | 136 | 149 | 162 | 83 | 104 | 124 | 143 | 161 | 179 | 196 | 211 | 227 | 249 |
| Medium-High | 55 | 70 | 87 | 102 | 117 | 131 | 145 | 159 | 173 | 190 | 127 | 149 | 169 | 190 | 209 | 227 | 245 | 263 | 280 | 301 |
| High | 70 | 87 | 106 | 124 | 141 | 159 | 175 | 189 | 204 | 224 | 182 | 203 | 224 | 244 | 264 | 284 | 303 | 321 | 341 | 362 |

## BLOWER DATA

### SLP99UH070XV36B BLOWER PERFORMANCE (less filter)

### SINGLE SIDE RETURN AIR

### HEATING BLOWER PERFORMANCE - 0 through 0.8 in. w.g. External Static Pressure Range

| Heating Adjust CFM Selections | Heating Input Range and Blower Volume - CFM | | | | | | | |
|---|---|---|---|---|---|---|---|---|
| | 35% | 40% | 50% | 60% | 70% | 80% | 90% | 100% |
| Increase (+15%) Heat CFM | 484 | 531 | 625 | 718 | 812 | 906 | 999 | 1093 |
| Increase (+7.5%) Heat CFM | 446 | 490 | 579 | 667 | 756 | 845 | 933 | 1022 |
| Default Heat CFM | 407 | 449 | 533 | 616 | 700 | 784 | 867 | 951 |
| Decrease (-7.5% ) Heat CFM | 377 | 413 | 487 | 561 | 635 | 709 | 783 | 857 |
| Decrease (-15% ) Heat CFM | 346 | 378 | 442 | 506 | 571 | 635 | 699 | 763 |

### COOLING BLOWER PERFORMANCE - 0 through 1.0 in. w.g. External Static Pressure Range

| Cooling Adjust CFM Selections | Blower Speed Selections | | | | | | | |
|---|---|---|---|---|---|---|---|---|
| | First Stage Cool Speed - cfm | | | | Second Stage Cool Speed - cfm | | | |
| | Low | Medium-Low | Medium High | High (Default) | Low | Medium-Low | Medium High | High (Default) |
| Increase (+10%) Cool CFM | 590 | 705 | 805 | 955 | 840 | 1050 | 1205 | 1355 |
| Default Cool CFM | 540 | 640 | 725 | 820 | 750 | 945 | 1130 | 1230 |
| Decrease (-10%) Cool CFM | 500 | 580 | 665 | 720 | 685 | 805 | 990 | 1110 |

The effect of static pressure is included in air volumes shown.

The following control configurations are available. See Installation Instructions for details and DIP switch settings.

**Heat Modes Available (Heating Blower Performance Table):**

Single stage thermostat:

- 35%, 70%, 100% input (three-stage) with time delays in-between.

Two-stage thermostat:

- Variable Rate Capacity Mode - furnace automatically adjusts firing rate based on first- and second-stage cycle times.
- W1 demand at 70% input, W2 demand at 100% input. No delay between stages.

**Cool Mode Available (Cooling Blower Performance table):**

First stage COOL (two-stage air conditioning units only) is approximately 70% of the same second stage COOL speed position.
Continuous Fan speeds are approximately 28% and 38% (DIP switch selectable) of the same second-stage COOL speed position.
minimum 250 cfm.

Lennox® Smart Zoning System Applications - Minimum blower speed is 250 cfm.

### SLP99UH070XV36B BLOWER MOTOR WATTS - COOLING

| Blower Speed Options | Motor Watts @ Various External Static Pressures - in. wg. | | | | | | | | | | | | | | | | | | | |
|---|---|---|---|---|---|---|---|---|---|---|---|---|---|---|---|---|---|---|---|---|
| | First Stage | | | | | | | | | Second Stage | | | | | | | | | | |
| | 0 | 0.1 | 0.2 | 0.3 | 0.4 | 0.5 | 0.6 | 0.7 | 0.8 | 0 | 0.1 | 0.2 | 0.3 | 0.4 | 0.5 | 0.6 | 0.7 | 0.8 | 0.9 | 1.0 |
| **Increase (+10%) Cool CFM** | | | | | | | | | | | | | | | | | | | | |
| Low | 17 | 29 | 48 | 61 | 73 | 94 | 100 | 123 | 130 | 63 | 84 | 104 | 117 | 142 | 160 | 174 | 208 | 215 | 245 | 255 |
| Medium-Low | 30 | 50 | 66 | 79 | 107 | 128 | 137 | 159 | 178 | 121 | 137 | 165 | 195 | 213 | 239 | 257 | 283 | 303 | 329 | 342 |
| Medium-High | 51 | 70 | 92 | 106 | 127 | 150 | 170 | 184 | 207 | 195 | 214 | 243 | 268 | 290 | 324 | 348 | 370 | 387 | 409 | 434 |
| High | 88 | 109 | 134 | 150 | 184 | 201 | 221 | 243 | 265 | 290 | 309 | 344 | 372 | 399 | 421 | 445 | 474 | 495 | 520 | 532 |
| **Default Cool CFM** | | | | | | | | | | | | | | | | | | | | |
| Low | 12 | 25 | 38 | 52 | 66 | 83 | 96 | 105 | 117 | 43 | 65 | 75 | 98 | 120 | 139 | 152 | 170 | 192 | 212 | 228 |
| Medium-Low | 22 | 41 | 55 | 70 | 86 | 103 | 123 | 141 | 154 | 88 | 106 | 130 | 150 | 173 | 197 | 220 | 239 | 259 | 276 | 297 |
| Medium-High | 36 | 55 | 75 | 90 | 107 | 129 | 152 | 167 | 184 | 142 | 161 | 187 | 211 | 239 | 263 | 287 | 307 | 332 | 352 | 369 |
| High | 57 | 76 | 99 | 116 | 135 | 153 | 176 | 197 | 213 | 220 | 236 | 267 | 294 | 323 | 342 | 364 | 382 | 411 | 436 | 455 |
| **Decrease (-10%) Cool CFM** | | | | | | | | | | | | | | | | | | | | |
| Low | 8 | 22 | 32 | 50 | 60 | 77 | 86 | 100 | 116 | 31 | 48 | 63 | 83 | 102 | 122 | 137 | 150 | 166 | 188 | 203 |
| Medium-Low | 19 | 32 | 47 | 63 | 77 | 93 | 103 | 120 | 133 | 53 | 75 | 91 | 111 | 129 | 152 | 169 | 188 | 210 | 227 | 251 |
| Medium-High | 25 | 42 | 58 | 74 | 90 | 109 | 131 | 143 | 154 | 101 | 120 | 141 | 170 | 190 | 215 | 233 | 256 | 274 | 298 | 317 |
| High | 37 | 56 | 76 | 95 | 115 | 135 | 153 | 173 | 192 | 157 | 177 | 201 | 224 | 254 | 277 | 303 | 321 | 346 | 362 | 385 |

## BLOWER DATA

**SLP99UH070XV36B BLOWER PERFORMANCE (less filter)**

**SINGLE SIDE RETURN AIR WITH OPTIONAL RETURN AIR BASE**

**HEATING BLOWER PERFORMANCE - 0 through 0.8 in. w.g. External Static Pressure Range**

| Heating Adjust CFM Selections | Heating Input Range and Blower Volume - CFM | | | | | | | |
|---|---|---|---|---|---|---|---|---|
| | 35% | 40% | 50% | 60% | 70% | 80% | 90% | 100% |
| Increase (+15%) Heat CFM | 471 | 519 | 614 | 709 | 805 | 900 | 996 | 1091 |
| Increase (+7.5%) Heat CFM | 435 | 480 | 570 | 660 | 751 | 841 | 931 | 1021 |
| Default Heat CFM | 399 | 441 | 526 | 611 | 696 | 781 | 866 | 951 |
| Decrease (-7.5% ) Heat CFM | 369 | 408 | 486 | 564 | 643 | 721 | 799 | 877 |
| Decrease (-15% ) Heat CFM | 339 | 375 | 446 | 517 | 589 | 660 | 732 | 803 |

**COOLING BLOWER PERFORMANCE - 0 through 1.0 in. w.g. External Static Pressure Range**

| Cooling Adjust CFM Selections | Blower Speed Selections | | | | | | | |
|---|---|---|---|---|---|---|---|---|
| | First Stage Cool Speed - cfm | | | | Second Stage Cool Speed - cfm | | | |
| | Low | Medium-Low | Medium High | High (Default) | Low | Medium-Low | Medium High | High (Default) |
| Increase (+10%) Cool CFM | 595 | 715 | 815 | 950 | 855 | 1045 | 1205 | 1350 |
| Default Cool CFM | 520 | 655 | 755 | 840 | 790 | 945 | 1090 | 1255 |
| Decrease (-10%) Cool CFM | 490 | 595 | 670 | 745 | 720 | 845 | 985 | 1130 |

The effect of static pressure is included in air volumes shown.

The following control configurations are available. See Installation Instructions for details and DIP switch settings.

**Heat Modes Available (Heating Blower Performance Table):**

Single stage thermostat:

- 35%, 70%, 100% input (three-stage) with time delays in-between.

Two-stage thermostat:

- Variable Rate Capacity Mode - furnace automatically adjusts firing rate based on first- and second-stage cycle times.
- W1 demand at 70% input, W2 demand at 100% input. No delay between stages.

**Cool Mode Available (Cooling Blower Performance table):**

First stage COOL (two-stage air conditioning units only) is approximately 70% of the same second stage COOL speed position.
Continuous Fan speeds are approximately 28% and 38% (DIP switch selectable) of the same second-stage COOL speed position.
minimum 250 cfm.

Lennox® Smart Zoning System Applications - Minimum blower speed is 250 cfm.

**SLP99UH070XV36B BLOWER MOTOR WATTS - COOLING**

| Blower Speed Options | Motor Watts @ Various External Static Pressures - in. wg. | | | | | | | | | | | | | | | | | | | |
|---|---|---|---|---|---|---|---|---|---|---|---|---|---|---|---|---|---|---|---|---|
| | First Stage | | | | | | | | | Second Stage | | | | | | | | | | |
| | 0 | 0.1 | 0.2 | 0.3 | 0.4 | 0.5 | 0.6 | 0.7 | 0.8 | 0 | 0.1 | 0.2 | 0.3 | 0.4 | 0.5 | 0.6 | 0.7 | 0.8 | 0.9 | 1.0 |
| **Increase (+10%) Cool CFM** | | | | | | | | | | | | | | | | | | | | |
| Low | 18 | 32 | 46 | 61 | 76 | 89 | 104 | 115 | 133 | 64 | 83 | 95 | 120 | 141 | 159 | 175 | 203 | 208 | 234 | 246 |
| Medium-Low | 34 | 52 | 69 | 86 | 104 | 126 | 141 | 160 | 174 | 109 | 131 | 150 | 179 | 204 | 219 | 239 | 268 | 283 | 313 | 335 |
| Medium-High | 63 | 82 | 98 | 115 | 138 | 153 | 173 | 187 | 209 | 177 | 197 | 227 | 246 | 273 | 311 | 328 | 354 | 383 | 402 | 408 |
| High | 88 | 107 | 131 | 148 | 175 | 192 | 217 | 235 | 253 | 255 | 281 | 312 | 346 | 382 | 402 | 430 | 465 | 489 | 506 | 533 |
| **Default Cool CFM** | | | | | | | | | | | | | | | | | | | | |
| Low | 12 | 25 | 37 | 55 | 66 | 82 | 94 | 105 | 121 | 43 | 61 | 76 | 99 | 121 | 133 | 162 | 169 | 189 | 211 | 224 |
| Medium-Low | 25 | 40 | 55 | 74 | 89 | 109 | 120 | 136 | 150 | 76 | 96 | 112 | 138 | 162 | 186 | 207 | 232 | 243 | 262 | 281 |
| Medium-High | 41 | 61 | 75 | 98 | 115 | 135 | 151 | 173 | 189 | 129 | 150 | 177 | 198 | 227 | 247 | 272 | 301 | 324 | 332 | 369 |
| High | 63 | 86 | 99 | 122 | 139 | 159 | 180 | 204 | 216 | 209 | 227 | 254 | 282 | 298 | 324 | 341 | 364 | 395 | 413 | 428 |
| **Decrease (-10%) Cool CFM** | | | | | | | | | | | | | | | | | | | | |
| Low | 9 | 20 | 35 | 48 | 59 | 75 | 86 | 94 | 110 | 29 | 43 | 63 | 84 | 99 | 113 | 131 | 144 | 164 | 185 | 197 |
| Medium-Low | 16 | 32 | 45 | 62 | 75 | 90 | 103 | 119 | 138 | 56 | 71 | 101 | 112 | 131 | 158 | 168 | 184 | 207 | 235 | 245 |
| Medium-High | 28 | 43 | 63 | 77 | 98 | 115 | 132 | 145 | 162 | 88 | 107 | 129 | 154 | 183 | 204 | 214 | 245 | 263 | 281 | 308 |
| High | 46 | 61 | 86 | 100 | 121 | 136 | 153 | 172 | 193 | 142 | 163 | 187 | 216 | 236 | 261 | 279 | 301 | 325 | 356 | 375 |

## BLOWER DATA

### SLP99UH090XV36C BLOWER PERFORMANCE (less filter)

### BOTTOM RETURN AIR

### HEATING BLOWER PERFORMANCE - 0 through 0.8 in. w.g. External Static Pressure Range

| Heating Adjust CFM Selections | Heating Input Range and Blower Volume - CFM | | | | | | | |
|---|---|---|---|---|---|---|---|---|
| | 35% | 40% | 50% | 60% | 70% | 80% | 90% | 100% |
| Increase (+15%) Heat CFM | 687 | 734 | 827 | 921 | 1014 | 1108 | 1201 | 1295 |
| Increase (+7.5%) Heat CFM | 654 | 697 | 782 | 867 | 953 | 1038 | 1123 | 1209 |
| Default Heat CFM | 621 | 660 | 737 | 814 | 891 | 968 | 1045 | 1122 |
| Decrease (-7.5% ) Heat CFM | 581 | 616 | 687 | 757 | 828 | 899 | 970 | 1041 |
| Decrease (-15% ) Heat CFM | 540 | 572 | 637 | 701 | 766 | 830 | 895 | 959 |

### COOLING BLOWER PERFORMANCE - 0 through 1.0 in. w.g. External Static Pressure Range

| Cooling Adjust CFM Selections | Blower Speed Selections | | | | | | | |
|---|---|---|---|---|---|---|---|---|
| | First Stage Cool Speed - cfm | | | | Second Stage Cool Speed - cfm | | | |
| | Low | Medium-Low | Medium High | High (Default) | Low | Medium-Low | Medium High | High (Default) |
| Increase (+10%) Cool CFM | 640 | 750 | 835 | 950 | 875 | 1040 | 1185 | 1365 |
| Default Cool CFM | 600 | 695 | 775 | 855 | 800 | 940 | 1090 | 1220 |
| Decrease (-10%) Cool CFM | 540 | 640 | 710 | 785 | 715 | 850 | 980 | 1105 |

The effect of static pressure is included in air volumes shown.

The following control configurations are available. See Installation Instructions for details and DIP switch settings.

**Heat Modes Available (Heating Blower Performance Table):**

Single stage thermostat:

- 35%, 70%, 100% input (three-stage) with time delays in-between.

Two-stage thermostat:

- Variable Rate Capacity Mode - furnace automatically adjusts firing rate based on first- and second-stage cycle times.
- W1 demand at 70% input, W2 demand at 100% input. No delay between stages.

**Cool Mode Available (Cooling Blower Performance table):**

First stage COOL (two-stage air conditioning units only) is approximately 70% of the same second stage COOL speed position.
Continuous Fan speeds are approximately 28% and 38% (DIP switch selectable) of the same second-stage COOL speed position.
minimum 250 cfm.

Lennox® Smart Zoning System Applications - Minimum blower speed is 250 cfm.

### SLP99UH090XV36C BLOWER MOTOR WATTS - COOLING

| Blower Speed Options | Motor Watts @ Various External Static Pressures - in. wg. | | | | | | | | | | | | | | | | | | | |
|---|---|---|---|---|---|---|---|---|---|---|---|---|---|---|---|---|---|---|---|---|
| | First Stage | | | | | | | | | | Second Stage | | | | | | | | | |
| | 0.1 | 0.2 | 0.3 | 0.4 | 0.5 | 0.6 | 0.7 | 0.8 | 0.9 | 1.0 | 0.1 | 0.2 | 0.3 | 0.4 | 0.5 | 0.6 | 0.7 | 0.8 | 0.9 | 1.0 |
| **Increase (+10%) Cool CFM** | | | | | | | | | | | | | | | | | | | | |
| Low | 45 | 60 | 74 | 92 | 105 | 119 | 134 | 149 | 165 | 180 | 74 | 95 | 116 | 136 | 158 | 181 | 201 | 222 | 240 | 263 |
| Medium-Low | 57 | 74 | 91 | 110 | 129 | 146 | 163 | 181 | 199 | 217 | 109 | 135 | 160 | 183 | 206 | 229 | 249 | 273 | 293 | 319 |
| Medium-High | 70 | 89 | 109 | 129 | 150 | 172 | 191 | 210 | 229 | 251 | 164 | 190 | 215 | 239 | 262 | 286 | 309 | 334 | 360 | 383 |
| High | 91 | 114 | 101 | 122 | 145 | 162 | 181 | 198 | 215 | 227 | 238 | 267 | 296 | 323 | 351 | 376 | 402 | 427 | 451 | 481 |
| **Default Cool CFM** | | | | | | | | | | | | | | | | | | | | |
| Low | 40 | 54 | 70 | 83 | 96 | 109 | 123 | 137 | 152 | 165 | 63 | 82 | 101 | 122 | 145 | 162 | 181 | 198 | 215 | 238 |
| Medium-Low | 50 | 66 | 82 | 99 | 115 | 131 | 147 | 164 | 182 | 197 | 86 | 108 | 133 | 155 | 176 | 199 | 222 | 243 | 262 | 287 |
| Medium-High | 60 | 77 | 96 | 115 | 135 | 153 | 171 | 189 | 207 | 226 | 124 | 151 | 177 | 203 | 225 | 247 | 269 | 291 | 316 | 341 |
| High | 72 | 93 | 113 | 134 | 155 | 177 | 197 | 216 | 235 | 257 | 178 | 204 | 231 | 255 | 280 | 304 | 326 | 351 | 376 | 401 |
| **Decrease (-10%) Cool CFM** | | | | | | | | | | | | | | | | | | | | |
| Low | 34 | 49 | 63 | 76 | 87 | 100 | 113 | 124 | 133 | 149 | 56 | 71 | 88 | 107 | 126 | 141 | 159 | 176 | 193 | 210 |
| Medium-Low | 44 | 60 | 76 | 92 | 105 | 119 | 135 | 151 | 166 | 181 | 71 | 91 | 111 | 131 | 152 | 173 | 194 | 213 | 231 | 253 |
| Medium-High | 52 | 68 | 85 | 102 | 119 | 135 | 152 | 169 | 187 | 203 | 96 | 121 | 143 | 166 | 188 | 209 | 233 | 255 | 275 | 299 |
| High | 61 | 80 | 98 | 117 | 137 | 156 | 174 | 192 | 211 | 230 | 133 | 159 | 184 | 207 | 232 | 253 | 276 | 299 | 322 | 346 |

## BLOWER DATA

### SLP99UH090XV36C BLOWER PERFORMANCE (less filter)

### SINGLE SIDE RETURN AIR

### HEATING BLOWER PERFORMANCE - 0 through 0.8 in. w.g. External Static Pressure Range

| Heating Adjust CFM Selections | Heating Input Range and Blower Volume - CFM | | | | | | | |
|---|---|---|---|---|---|---|---|---|
| | 35% | 40% | 50% | 60% | 70% | 80% | 90% | 100% |
| Increase (+15%) Heat CFM | 657 | 702 | 792 | 881 | 971 | 1061 | 1150 | 1240 |
| Increase (+7.5%) Heat CFM | 631 | 673 | 757 | 841 | 926 | 1010 | 1094 | 1178 |
| Default Heat CFM | 605 | 644 | 723 | 802 | 880 | 959 | 1037 | 1116 |
| Decrease (-7.5% ) Heat CFM | 574 | 608 | 676 | 745 | 814 | 882 | 951 | 1020 |
| Decrease (-15% ) Heat CFM | 542 | 571 | 630 | 689 | 747 | 806 | 864 | 923 |

### COOLING BLOWER PERFORMANCE - 0 through 1.0 in. w.g. External Static Pressure Range

| Cooling Adjust CFM Selections | Blower Speed Selections | | | | | | | |
|---|---|---|---|---|---|---|---|---|
| | First Stage Cool Speed - cfm | | | | Second Stage Cool Speed - cfm | | | |
| | Low | Medium-Low | Medium High | High (Default) | Low | Medium-Low | Medium High | High (Default) |
| Increase (+10%) Cool CFM | 610 | 705 | 795 | 920 | 840 | 1015 | 1165 | 1300 |
| Default Cool CFM | 560 | 640 | 715 | 810 | 770 | 910 | 1050 | 1190 |
| Decrease (-10%) Cool CFM | 525 | 605 | 665 | 725 | 695 | 795 | 945 | 1110 |

The effect of static pressure is included in air volumes shown.

The following control configurations are available. See Installation Instructions for details and DIP switch settings.

**Heat Modes Available (Heating Blower Performance Table):**

Single stage thermostat:

- 35%, 70%, 100% input (three-stage) with time delays in-between.

Two-stage thermostat:

- Variable Rate Capacity Mode - furnace automatically adjusts firing rate based on first- and second-stage cycle times.
- W1 demand at 70% input, W2 demand at 100% input. No delay between stages.

**Cool Mode Available (Cooling Blower Performance table):**

First stage COOL (two-stage air conditioning units only) is approximately 70% of the same second stage COOL speed position.
Continuous Fan speeds are approximately 28% and 38% (DIP switch selectable) of the same second-stage COOL speed position.
minimum 250 cfm.

Lennox® Smart Zoning System Applications - Minimum blower speed is 250 cfm.

### SLP99UH090XV36C BLOWER MOTOR WATTS - COOLING

| Blower Speed Options | Motor Watts @ Various External Static Pressures - in. wg. | | | | | | | | | | | | | | | | | | | |
|---|---|---|---|---|---|---|---|---|---|---|---|---|---|---|---|---|---|---|---|---|
| | First Stage | | | | | | | | | Second Stage | | | | | | | | | | |
| | 0 | 0.1 | 0.2 | 0.3 | 0.4 | 0.5 | 0.6 | 0.7 | 0.8 | 0 | 0.1 | 0.2 | 0.3 | 0.4 | 0.5 | 0.6 | 0.7 | 0.8 | 0.9 | 1.0 |
| **Increase (+10%) Cool CFM** | | | | | | | | | | | | | | | | | | | | |
| Low | 13 | 30 | 46 | 62 | 75 | 93 | 110 | 129 | 143 | 42 | 60 | 83 | 101 | 122 | 144 | 163 | 181 | 206 | 219 | 241 |
| Medium-Low | 25 | 45 | 62 | 80 | 96 | 115 | 134 | 151 | 173 | 78 | 104 | 122 | 144 | 170 | 195 | 215 | 239 | 265 | 283 | 308 |
| Medium-High | 36 | 55 | 79 | 95 | 117 | 139 | 156 | 178 | 199 | 133 | 154 | 175 | 213 | 236 | 269 | 282 | 309 | 336 | 357 | 381 |
| High | 62 | 83 | 105 | 128 | 148 | 163 | 193 | 210 | 234 | 210 | 229 | 259 | 291 | 317 | 344 | 366 | 391 | 415 | 441 | 466 |
| **Default Cool CFM** | | | | | | | | | | | | | | | | | | | | |
| Low | 9 | 28 | 38 | 55 | 71 | 83 | 100 | 116 | 135 | 28 | 48 | 65 | 86 | 104 | 124 | 142 | 164 | 182 | 199 | 219 |
| Medium-Low | 20 | 38 | 52 | 69 | 83 | 102 | 120 | 135 | 152 | 59 | 81 | 100 | 125 | 142 | 162 | 182 | 204 | 229 | 248 | 269 |
| Medium-High | 26 | 46 | 63 | 83 | 101 | 117 | 141 | 157 | 178 | 95 | 118 | 142 | 165 | 192 | 213 | 244 | 264 | 288 | 314 | 329 |
| High | 39 | 59 | 81 | 98 | 121 | 143 | 161 | 180 | 202 | 149 | 171 | 199 | 229 | 257 | 285 | 306 | 330 | 359 | 389 | 403 |
| **Decrease (-10%) Cool CFM** | | | | | | | | | | | | | | | | | | | | |
| Low | 8 | 23 | 35 | 52 | 66 | 80 | 95 | 108 | 121 | 21 | 41 | 56 | 71 | 91 | 110 | 126 | 144 | 164 | 179 | 197 |
| Medium-Low | 12 | 29 | 44 | 59 | 75 | 92 | 111 | 126 | 140 | 35 | 56 | 73 | 95 | 115 | 137 | 155 | 176 | 198 | 216 | 235 |
| Medium-High | 20 | 37 | 56 | 71 | 86 | 104 | 122 | 143 | 155 | 70 | 89 | 114 | 135 | 157 | 175 | 199 | 225 | 242 | 266 | 282 |
| High | 27 | 47 | 67 | 82 | 102 | 124 | 142 | 160 | 181 | 104 | 125 | 150 | 178 | 207 | 232 | 251 | 273 | 297 | 321 | 350 |

## BLOWER DATA

### SLP99UH090XV36C BLOWER PERFORMANCE (less filter)

### SINGLE SIDE RETURN AIR WITH OPTIONAL RETURN AIR BASE

### HEATING BLOWER PERFORMANCE - 0 through 0.8 in. w.g. External Static Pressure Range

| Heating Adjust CFM Selections | Heating Input Range and Blower Volume - CFM | | | | | | | |
|---|---|---|---|---|---|---|---|---|
| | 35% | 40% | 50% | 60% | 70% | 80% | 90% | 100% |
| Increase (+15%) Heat CFM | 677 | 721 | 810 | 899 | 988 | 1076 | 1165 | 1254 |
| Increase (+7.5%) Heat CFM | 639 | 679 | 760 | 842 | 923 | 1004 | 1085 | 1167 |
| Default Heat CFM | 600 | 637 | 711 | 784 | 858 | 932 | 1005 | 1079 |
| Decrease (-7.5% ) Heat CFM | 573 | 606 | 673 | 740 | 806 | 873 | 939 | 1006 |
| Decrease (-15% ) Heat CFM | 546 | 576 | 635 | 695 | 754 | 814 | 873 | 933 |

### COOLING BLOWER PERFORMANCE - 0 through 1.0 in. w.g. External Static Pressure Range

| Cooling Adjust CFM Selections | Blower Speed Selections | | | | | | | |
|---|---|---|---|---|---|---|---|---|
| | First Stage Cool Speed - cfm | | | | Second Stage Cool Speed - cfm | | | |
| | Low | Medium-Low | Medium High | High (Default) | Low | Medium-Low | Medium High | High (Default) |
| Increase (+10%) Cool CFM | 605 | 715 | 810 | 930 | 850 | 995 | 1165 | 1305 |
| Default Cool CFM | 570 | 660 | 735 | 820 | 775 | 905 | 1050 | 1205 |
| Decrease (-10%) Cool CFM | 530 | 600 | 670 | 725 | 710 | 800 | 945 | 1070 |

The effect of static pressure is included in air volumes shown.

The following control configurations are available. See Installation Instructions for details and DIP switch settings.

**Heat Modes Available (Heating Blower Performance Table):**

Single stage thermostat:

- 35%, 70%, 100% input (three-stage) with time delays in-between.

Two-stage thermostat:

- Variable Rate Capacity Mode - furnace automatically adjusts firing rate based on first- and second-stage cycle times.
- W1 demand at 70% input, W2 demand at 100% input. No delay between stages.

**Cool Mode Available (Cooling Blower Performance table):**

First stage COOL (two-stage air conditioning units only) is approximately 70% of the same second stage COOL speed position.
Continuous Fan speeds are approximately 28% and 38% (DIP switch selectable) of the same second-stage COOL speed position.
minimum 250 cfm.

Lennox® Smart Zoning System Applications - Minimum blower speed is 250 cfm.

### SLP99UH090XV36C BLOWER MOTOR WATTS - COOLING

| Blower Speed Options | Motor Watts @ Various External Static Pressures - in. wg. | | | | | | | | | | | | | | | | | | | |
|---|---|---|---|---|---|---|---|---|---|---|---|---|---|---|---|---|---|---|---|---|
| | First Stage | | | | | | | | | Second Stage | | | | | | | | | | |
| | 0 | 0.1 | 0.2 | 0.3 | 0.4 | 0.5 | 0.6 | 0.7 | 0.8 | 0 | 0.1 | 0.2 | 0.3 | 0.4 | 0.5 | 0.6 | 0.7 | 0.8 | 0.9 | 1.0 |
| **Increase (+10%) Cool CFM** | | | | | | | | | | | | | | | | | | | | |
| Low | 12 | 29 | 43 | 59 | 75 | 92 | 111 | 123 | 139 | 41 | 62 | 86 | 102 | 123 | 145 | 165 | 185 | 205 | 229 | 253 |
| Medium-Low | 24 | 42 | 61 | 76 | 97 | 112 | 132 | 150 | 169 | 79 | 108 | 126 | 148 | 174 | 190 | 218 | 248 | 273 | 294 | 316 |
| Medium-High | 38 | 56 | 81 | 99 | 115 | 138 | 157 | 176 | 199 | 131 | 152 | 184 | 208 | 237 | 264 | 289 | 320 | 339 | 361 | 390 |
| High | 61 | 85 | 104 | 127 | 144 | 171 | 192 | 212 | 239 | 205 | 226 | 258 | 283 | 312 | 344 | 365 | 393 | 410 | 437 | 466 |
| **Default Cool CFM** | | | | | | | | | | | | | | | | | | | | |
| Low | 9 | 26 | 37 | 54 | 67 | 83 | 97 | 112 | 130 | 30 | 50 | 72 | 87 | 108 | 127 | 149 | 167 | 184 | 209 | 226 |
| Medium-Low | 19 | 37 | 53 | 67 | 83 | 101 | 119 | 135 | 153 | 62 | 86 | 101 | 129 | 144 | 165 | 189 | 215 | 232 | 251 | 275 |
| Medium-High | 27 | 48 | 65 | 82 | 101 | 119 | 139 | 161 | 177 | 91 | 114 | 140 | 163 | 195 | 220 | 239 | 265 | 289 | 315 | 339 |
| High | 42 | 62 | 85 | 99 | 121 | 143 | 162 | 183 | 203 | 149 | 167 | 201 | 228 | 258 | 289 | 316 | 333 | 355 | 389 | 403 |
| **Decrease (-10%) Cool CFM** | | | | | | | | | | | | | | | | | | | | |
| Low | 8 | 23 | 35 | 51 | 62 | 77 | 91 | 104 | 119 | 25 | 45 | 61 | 75 | 91 | 112 | 131 | 147 | 166 | 184 | 198 |
| Medium-Low | 13 | 29 | 46 | 60 | 78 | 93 | 110 | 125 | 140 | 40 | 61 | 81 | 103 | 119 | 143 | 162 | 179 | 204 | 220 | 245 |
| Medium-High | 22 | 41 | 57 | 70 | 88 | 109 | 127 | 144 | 159 | 70 | 92 | 120 | 133 | 165 | 178 | 203 | 231 | 246 | 274 | 301 |
| High | 29 | 50 | 69 | 83 | 106 | 123 | 143 | 164 | 183 | 101 | 124 | 151 | 180 | 203 | 227 | 257 | 276 | 306 | 326 | 358 |

## BLOWER DATA

**SLP99UH090XV48C BLOWER PERFORMANCE (less filter)**

**BOTTOM RETURN AIR**

**HEATING BLOWER PERFORMANCE - 0 through 0.8 in. w.g. External Static Pressure Range**

| Heating Adjust CFM Selections | Heating Input Range and Blower Volume - CFM | | | | | | | |
|---|---|---|---|---|---|---|---|---|
| | 35% | 40% | 50% | 60% | 70% | 80% | 90% | 100% |
| Increase (+15%) Heat CFM | 769 | 835 | 968 | 1101 | 1234 | 1367 | 1500 | 1633 |
| Increase (+7.5%) Heat CFM | 713 | 776 | 902 | 1028 | 1155 | 1281 | 1407 | 1534 |
| Default Heat CFM | 656 | 716 | 836 | 955 | 1075 | 1195 | 1314 | 1434 |
| Decrease (-7.5% ) Heat CFM | 595 | 652 | 767 | 882 | 997 | 1112 | 1227 | 1342 |
| Decrease (-15% ) Heat CFM | 534 | 589 | 699 | 809 | 919 | 1029 | 1139 | 1249 |

**COOLING BLOWER PERFORMANCE - 0 through 1.0 in. w.g. External Static Pressure Range**

| Cooling Adjust CFM Selections | Blower Speed Selections | | | | | | | |
|---|---|---|---|---|---|---|---|---|
| | First Stage Cool Speed - cfm | | | | Second Stage Cool Speed - cfm | | | |
| | Low | Medium-Low | Medium High | High (Default) | Low | Medium-Low | Medium High | High (Default) |
| Increase (+10%) Cool CFM | 815 | 975 | 1095 | 1270 | 1125 | 1375 | 1565 | 1785 |
| Default Cool CFM | 745 | 885 | 1005 | 1145 | 1030 | 1235 | 1445 | 1615 |
| Decrease (-10%) Cool CFM | 675 | 810 | 910 | 1040 | 950 | 1115 | 1305 | 1480 |

The effect of static pressure is included in air volumes shown.

The following control configurations are available. See Installation Instructions for details and DIP switch settings.

**Heat Modes Available (Heating Blower Performance Table):**

Single stage thermostat:

- 35%, 70%, 100% input (three-stage) with time delays in-between.

Two-stage thermostat:

- Variable Rate Capacity Mode - furnace automatically adjusts firing rate based on first- and second-stage cycle times.
- W1 demand at 70% input, W2 demand at 100% input. No delay between stages.

**Cool Mode Available (Cooling Blower Performance table):**

First stage COOL (two-stage air conditioning units only) is approximately 70% of the same second stage COOL speed position.
Continuous Fan speeds are approximately 28% and 38% (DIP switch selectable) of the same second-stage COOL speed position.
minimum 380 cfm.

Lennox® Smart Zoning System Applications - Minimum blower speed is 380 cfm.

**SLP99UH090XV48C BLOWER MOTOR WATTS - COOLING**

| Blower Speed Options | Motor Watts @ Various External Static Pressures - in. wg. | | | | | | | | | | | | | | | | | | | |
|---|---|---|---|---|---|---|---|---|---|---|---|---|---|---|---|---|---|---|---|---|
| | First Stage | | | | | | | | | Second Stage | | | | | | | | | | |
| | 0 | 0.1 | 0.2 | 0.3 | 0.4 | 0.5 | 0.6 | 0.7 | 0.8 | 0 | 0.1 | 0.2 | 0.3 | 0.4 | 0.5 | 0.6 | 0.7 | 0.8 | 0.9 | 1.0 |
| **Increase (+10%) Cool CFM** | | | | | | | | | | | | | | | | | | | | |
| Low | 36 | 62 | 82 | 104 | 126 | 149 | 172 | 196 | 222 | 82 | 120 | 146 | 173 | 198 | 228 | 258 | 290 | 324 | 358 | 391 |
| Medium-Low | 60 | 88 | 110 | 134 | 160 | 189 | 213 | 235 | 264 | 152 | 190 | 222 | 255 | 288 | 319 | 352 | 387 | 424 | 462 | 499 |
| Medium-High | 81 | 113 | 139 | 166 | 191 | 221 | 251 | 282 | 313 | 238 | 282 | 315 | 349 | 384 | 418 | 455 | 494 | 532 | 575 | 618 |
| High | 125 | 161 | 192 | 220 | 250 | 283 | 316 | 351 | 388 | 366 | 422 | 448 | 487 | 522 | 566 | 603 | 642 | 692 | 739 | 786 |
| **Default Cool CFM** | | | | | | | | | | | | | | | | | | | | |
| Low | 30 | 54 | 72 | 93 | 114 | 137 | 158 | 180 | 203 | 64 | 98 | 122 | 147 | 176 | 201 | 227 | 259 | 292 | 320 | 350 |
| Medium-Low | 46 | 73 | 93 | 116 | 139 | 164 | 190 | 218 | 238 | 107 | 145 | 174 | 203 | 233 | 263 | 296 | 330 | 363 | 400 | 435 |
| Medium-High | 64 | 94 | 116 | 142 | 170 | 199 | 220 | 250 | 281 | 179 | 219 | 252 | 285 | 319 | 353 | 388 | 426 | 462 | 500 | 539 |
| High | 93 | 127 | 155 | 179 | 208 | 238 | 269 | 302 | 336 | 265 | 309 | 344 | 378 | 413 | 450 | 488 | 527 | 564 | 606 | 652 |
| **Decrease (-10%) Cool CFM** | | | | | | | | | | | | | | | | | | | | |
| Low | 29 | 54 | 64 | 82 | 102 | 122 | 141 | 161 | 182 | 52 | 80 | 102 | 124 | 149 | 176 | 205 | 227 | 250 | 277 | 306 |
| Medium-Low | 34 | 61 | 81 | 102 | 123 | 147 | 171 | 196 | 223 | 78 | 115 | 140 | 169 | 192 | 223 | 255 | 287 | 317 | 351 | 384 |
| Medium-High | 50 | 78 | 98 | 121 | 145 | 171 | 198 | 223 | 244 | 127 | 166 | 196 | 226 | 255 | 287 | 321 | 355 | 391 | 428 | 463 |
| High | 70 | 100 | 124 | 150 | 181 | 202 | 232 | 262 | 292 | 194 | 234 | 268 | 302 | 337 | 371 | 406 | 442 | 480 | 520 | 560 |

## BLOWER DATA

### SLP99UH090XV48C BLOWER PERFORMANCE (less filter)

### SINGLE SIDE RETURN AIR

### HEATING BLOWER PERFORMANCE - 0 through 0.8 in. w.g. External Static Pressure Range

| Heating Adjust CFM Selections | Heating Input Range and Blower Volume - CFM | | | | | | | |
|---|---|---|---|---|---|---|---|---|
| | 35% | 40% | 50% | 60% | 70% | 80% | 90% | 100% |
| Increase (+15%) Heat CFM | 747 | 812 | 943 | 1073 | 1204 | 1334 | 1465 | 1595 |
| Increase (+7.5%) Heat CFM | 698 | 759 | 882 | 1005 | 1127 | 1250 | 1372 | 1495 |
| Default Heat CFM | 649 | 706 | 821 | 936 | 1051 | 1165 | 1280 | 1395 |
| Decrease (-7.5% ) Heat CFM | 589 | 644 | 755 | 867 | 978 | 1089 | 1200 | 1312 |
| Decrease (-15% ) Heat CFM | 528 | 582 | 690 | 797 | 905 | 1013 | 1120 | 1228 |

### COOLING BLOWER PERFORMANCE - 0 through 1.0 in. w.g. External Static Pressure Range

| Cooling Adjust CFM Selections | Blower Speed Selections | | | | | | | |
|---|---|---|---|---|---|---|---|---|
| | First Stage Cool Speed - cfm | | | | Second Stage Cool Speed - cfm | | | |
| | Low | Medium-Low | Medium High | High (Default) | Low | Medium-Low | Medium High | High (Default) |
| Increase (+10%) Cool CFM | 820 | 1005 | 1135 | 1290 | 1140 | 1340 | 1525 | 1725 |
| Default Cool CFM | 755 | 880 | 1025 | 1150 | 1040 | 1235 | 1395 | 1565 |
| Decrease (-10%) Cool CFM | 680 | 815 | 925 | 1065 | 910 | 1120 | 1275 | 1400 |

The effect of static pressure is included in air volumes shown.

The following control configurations are available. See Installation Instructions for details and DIP switch settings.

**Heat Modes Available (Heating Blower Performance Table):**

Single stage thermostat:

- 35%, 70%, 100% input (three-stage) with time delays in-between.

Two-stage thermostat:

- Variable Rate Capacity Mode - furnace automatically adjusts firing rate based on first- and second-stage cycle times.
- W1 demand at 70% input, W2 demand at 100% input. No delay between stages.

**Cool Mode Available (Cooling Blower Performance table):**

First stage COOL (two-stage air conditioning units only) is approximately 70% of the same second stage COOL speed position.
Continuous Fan speeds are approximately 28% and 38% (DIP switch selectable) of the same second-stage COOL speed position.
minimum 3808 cfm.

Lennox® Smart Zoning System Applications - Minimum blower speed is 380 cfm.

### SLP99UH090XV48C BLOWER MOTOR WATTS - COOLING

| Blower Speed Options | Motor Watts @ Various External Static Pressures - in. wg. | | | | | | | | | | | | | | | | | | | |
|---|---|---|---|---|---|---|---|---|---|---|---|---|---|---|---|---|---|---|---|---|
| | First Stage | | | | | | | | | Second Stage | | | | | | | | | | |
| | 0 | 0.1 | 0.2 | 0.3 | 0.4 | 0.5 | 0.6 | 0.7 | 0.8 | 0 | 0.1 | 0.2 | 0.3 | 0.4 | 0.5 | 0.6 | 0.7 | 0.8 | 0.9 | 1.0 |
| **Increase (+10%) Cool CFM** | | | | | | | | | | | | | | | | | | | | |
| Low | 43 | 65 | 85 | 96 | 119 | 134 | 156 | 179 | 199 | 102 | 131 | 155 | 189 | 216 | 249 | 282 | 304 | 331 | 359 | 387 |
| Medium-Low | 66 | 95 | 113 | 140 | 164 | 189 | 212 | 242 | 268 | 173 | 196 | 242 | 271 | 306 | 337 | 362 | 405 | 430 | 460 | 493 |
| Medium-High | 95 | 126 | 151 | 180 | 210 | 242 | 277 | 302 | 320 | 243 | 277 | 316 | 371 | 412 | 457 | 492 | 534 | 566 | 605 | 651 |
| High | 143 | 166 | 203 | 243 | 282 | 309 | 333 | 368 | 389 | 368 | 410 | 453 | 511 | 562 | 604 | 651 | 690 | 730 | 771 | 809 |
| **Default Cool CFM** | | | | | | | | | | | | | | | | | | | | |
| Low | 36 | 48 | 73 | 86 | 108 | 120 | 140 | 152 | 168 | 75 | 101 | 125 | 156 | 178 | 215 | 244 | 259 | 288 | 320 | 339 |
| Medium-Low | 52 | 75 | 95 | 110 | 130 | 161 | 176 | 201 | 216 | 129 | 154 | 190 | 218 | 257 | 295 | 322 | 346 | 377 | 404 | 434 |
| Medium-High | 70 | 94 | 125 | 146 | 172 | 198 | 230 | 252 | 275 | 190 | 222 | 270 | 299 | 325 | 368 | 398 | 439 | 470 | 508 | 549 |
| High | 100 | 131 | 162 | 197 | 228 | 260 | 298 | 328 | 347 | 275 | 310 | 359 | 400 | 445 | 469 | 525 | 562 | 597 | 642 | 682 |
| **Decrease (-10%) Cool CFM** | | | | | | | | | | | | | | | | | | | | |
| Low | 32 | 45 | 58 | 80 | 97 | 110 | 121 | 133 | 154 | 62 | 87 | 109 | 129 | 152 | 173 | 199 | 221 | 250 | 266 | 295 |
| Medium-Low | 45 | 63 | 82 | 99 | 119 | 137 | 150 | 171 | 193 | 95 | 124 | 150 | 180 | 207 | 240 | 269 | 297 | 325 | 356 | 375 |
| Medium-High | 55 | 82 | 101 | 119 | 145 | 167 | 192 | 213 | 239 | 148 | 177 | 205 | 244 | 286 | 309 | 346 | 370 | 402 | 431 | 467 |
| High | 76 | 101 | 137 | 160 | 188 | 218 | 245 | 271 | 302 | 198 | 239 | 274 | 308 | 349 | 384 | 426 | 471 | 500 | 542 | 576 |

## BLOWER DATA

**SLP99UH090XV48C BLOWER PERFORMANCE (less filter)**

**SINGLE SIDE RETURN AIR WITH OPTIONAL RETURN AIR BASE**

**HEATING BLOWER PERFORMANCE - 0 through 0.8 in. w.g. External Static Pressure Range**

| Heating Adjust CFM Selections | Heating Input Range and Blower Volume - CFM | | | | | | | |
|---|---|---|---|---|---|---|---|---|
| | 35% | 40% | 50% | 60% | 70% | 80% | 90% | 100% |
| Increase (+15%) Heat CFM | 764 | 828 | 956 | 1084 | 1213 | 1341 | 1469 | 1597 |
| Increase (+7.5%) Heat CFM | 705 | 766 | 888 | 1010 | 1132 | 1255 | 1377 | 1499 |
| Default Heat CFM | 645 | 703 | 819 | 936 | 1052 | 1168 | 1285 | 1401 |
| Decrease (-7.5% ) Heat CFM | 594 | 650 | 762 | 874 | 986 | 1099 | 1211 | 1323 |
| Decrease (-15% ) Heat CFM | 542 | 596 | 704 | 812 | 921 | 1029 | 1137 | 1245 |

**COOLING BLOWER PERFORMANCE - 0 through 1.0 in. w.g. External Static Pressure Range**

| Cooling Adjust CFM Selections | Blower Speed Selections | | | | | | | |
|---|---|---|---|---|---|---|---|---|
| | First Stage Cool Speed - cfm | | | | Second Stage Cool Speed - cfm | | | |
| | Low | Medium-Low | Medium High | High (Default) | Low | Medium-Low | Medium High | High (Default) |
| Increase (+10%) Cool CFM | 840 | 955 | 1120 | 1280 | 1160 | 1360 | 1530 | 1740 |
| Default Cool CFM | 775 | 910 | 1010 | 1170 | 1060 | 1240 | 1400 | 1590 |
| Decrease (-10%) Cool CFM | 695 | 815 | 930 | 1045 | 925 | 1130 | 1295 | 1440 |

The effect of static pressure is included in air volumes shown.

The following control configurations are available. See Installation Instructions for details and DIP switch settings.

**Heat Modes Available (Heating Blower Performance Table):**

Single stage thermostat:

- 35%, 70%, 100% input (three-stage) with time delays in-between.

Two-stage thermostat:

- Variable Rate Capacity Mode - furnace automatically adjusts firing rate based on first- and second-stage cycle times.
- W1 demand at 70% input, W2 demand at 100% input. No delay between stages.

**Cool Mode Available (Cooling Blower Performance table):**

First stage COOL (two-stage air conditioning units only) is approximately 70% of the same second stage COOL speed position.
Continuous Fan speeds are approximately 28% and 38% (DIP switch selectable) of the same second-stage COOL speed position.
minimum 380 cfm.

Lennox® Smart Zoning System Applications - Minimum blower speed is 380 cfm.

**SLP99UH090XV48C BLOWER MOTOR WATTS - COOLING**

| Blower Speed Options | Motor Watts @ Various External Static Pressures - in. wg. | | | | | | | | | | | | | | | | | | | |
|---|---|---|---|---|---|---|---|---|---|---|---|---|---|---|---|---|---|---|---|---|
| | First Stage | | | | | | | | | Second Stage | | | | | | | | | | |
| | 0 | 0.1 | 0.2 | 0.3 | 0.4 | 0.5 | 0.6 | 0.7 | 0.8 | 0 | 0.1 | 0.2 | 0.3 | 0.4 | 0.5 | 0.6 | 0.7 | 0.8 | 0.9 | 1.0 |
| **Increase (+10%) Cool CFM** | | | | | | | | | | | | | | | | | | | | |
| Low | 40 | 60 | 80 | 96 | 115 | 133 | 151 | 176 | 192 | 94 | 127 | 151 | 180 | 207 | 241 | 274 | 303 | 340 | 358 | 381 |
| Medium-Low | 58 | 87 | 108 | 132 | 158 | 188 | 212 | 240 | 264 | 166 | 195 | 233 | 269 | 300 | 328 | 356 | 394 | 426 | 455 | 496 |
| Medium-High | 91 | 126 | 145 | 169 | 205 | 228 | 255 | 288 | 320 | 234 | 273 | 314 | 354 | 403 | 431 | 484 | 514 | 571 | 599 | 632 |
| High | 134 | 163 | 195 | 231 | 264 | 297 | 320 | 359 | 381 | 337 | 378 | 426 | 470 | 518 | 557 | 604 | 654 | 684 | 722 | 768 |
| **Default Cool CFM** | | | | | | | | | | | | | | | | | | | | |
| Low | 36 | 47 | 70 | 88 | 103 | 120 | 139 | 146 | 167 | 75 | 100 | 130 | 149 | 183 | 212 | 238 | 260 | 293 | 315 | 337 |
| Medium-Low | 51 | 75 | 93 | 115 | 135 | 158 | 187 | 201 | 222 | 132 | 156 | 192 | 220 | 259 | 284 | 319 | 343 | 376 | 404 | 423 |
| Medium-High | 59 | 92 | 112 | 141 | 166 | 200 | 228 | 259 | 281 | 183 | 215 | 262 | 284 | 315 | 348 | 387 | 427 | 464 | 494 | 523 |
| High | 97 | 130 | 156 | 191 | 215 | 256 | 283 | 310 | 343 | 253 | 292 | 331 | 379 | 414 | 462 | 497 | 546 | 575 | 613 | 661 |
| **Decrease (-10%) Cool CFM** | | | | | | | | | | | | | | | | | | | | |
| Low | 26 | 41 | 55 | 73 | 88 | 104 | 120 | 134 | 149 | 56 | 84 | 104 | 123 | 149 | 174 | 199 | 224 | 248 | 268 | 290 |
| Medium-Low | 41 | 62 | 79 | 98 | 117 | 132 | 154 | 172 | 195 | 94 | 122 | 146 | 177 | 208 | 239 | 264 | 295 | 320 | 352 | 368 |
| Medium-High | 50 | 75 | 95 | 120 | 147 | 164 | 187 | 209 | 243 | 140 | 170 | 197 | 234 | 263 | 301 | 327 | 357 | 377 | 412 | 453 |
| High | 72 | 102 | 125 | 154 | 178 | 208 | 234 | 262 | 293 | 196 | 235 | 264 | 302 | 332 | 377 | 413 | 441 | 482 | 518 | 548 |

## BLOWER DATA

**SLP99UH090XV60C BLOWER PERFORMANCE (less filter)**

**BOTTOM RETURN AIR**

**HEATING BLOWER PERFORMANCE - 0 through 0.8 in. w.g. External Static Pressure Range**

| Heating Adjust CFM Selections | Heating Input Range and Blower Volume - CFM | | | | | | | |
|---|---|---|---|---|---|---|---|---|
| | 35% | 40% | 50% | 60% | 70% | 80% | 90% | 100% |
| Increase (+15%) Heat CFM | 583 | 665 | 830 | 995 | 1159 | 1324 | 1488 | 1653 |
| Increase (+7.5%) Heat CFM | 540 | 618 | 774 | 930 | 1085 | 1241 | 1397 | 1553 |
| Default Heat CFM | 497 | 571 | 718 | 865 | 1012 | 1159 | 1306 | 1453 |
| Decrease (-7.5% ) Heat CFM | 439 | 507 | 644 | 781 | 917 | 1054 | 1191 | 1328 |
| Decrease (-15% ) Heat CFM | 380 | 443 | 570 | 697 | 823 | 950 | 1076 | 1203 |

**COOLING BLOWER PERFORMANCE - 0 through 1.0 in. w.g. External Static Pressure Range**

| Cooling Adjust CFM Selections | Blower Speed Selections | | | | | | | |
|---|---|---|---|---|---|---|---|---|
| | First Stage Cool Speed - cfm | | | | Second Stage Cool Speed - cfm | | | |
| | Low | Medium-Low | Medium High | High (Default) | Low | Medium-Low | Medium High | High (Default) |
| Increase (+10%) Cool CFM | 1105 | 1280 | 1400 | 1590 | 1590 | 1820 | 2025 | 2270 |
| Default Cool CFM | 1015 | 1165 | 1285 | 1425 | 1425 | 1635 | 1855 | 2035 |
| Decrease (-10%) Cool CFM | 920 | 1055 | 1165 | 1295 | 1290 | 1470 | 1655 | 1855 |

The effect of static pressure is included in air volumes shown.

The following control configurations are available. See Installation Instructions for details and DIP switch settings.

**Heat Modes Available (Heating Blower Performance Table):**

Single stage thermostat:

- 35%, 70%, 100% input (three-stage) with time delays in-between.

Two-stage thermostat:

- Variable Rate Capacity Mode - furnace automatically adjusts firing rate based on first- and second-stage cycle times.
- W1 demand at 70% input, W2 demand at 100% input. No delay between stages.

**Cool Mode Available (Cooling Blower Performance table):**

First stage COOL (two-stage air conditioning units only) is approximately 70% of the same second stage COOL speed position.
Continuous Fan speeds are approximately 28% and 38% (DIP switch selectable) of the same second-stage COOL speed position.
minimum 380 cfm.

Lennox® Smart Zoning System Applications - Minimum blower speed is 450 cfm.

**SLP99UH090XV60C BLOWER MOTOR WATTS - COOLING**

| Blower Speed Options | Motor Watts @ Various External Static Pressures - in. wg. | | | | | | | | | | | | | | | | | | | |
|---|---|---|---|---|---|---|---|---|---|---|---|---|---|---|---|---|---|---|---|---|
| | First Stage | | | | | | | | | | Second Stage | | | | | | | | | |
| | 0.1 | 0.2 | 0.3 | 0.4 | 0.5 | 0.6 | 0.7 | 0.8 | 0.9 | 1.0 | 0.1 | 0.2 | 0.3 | 0.4 | 0.5 | 0.6 | 0.7 | 0.8 | 0.9 | 1.0 |
| **Increase (+10%) Cool CFM** | | | | | | | | | | | | | | | | | | | | |
| Low | 124 | 145 | 167 | 192 | 219 | 246 | 273 | 300 | 329 | 351 | 278 | 313 | 350 | 386 | 421 | 455 | 491 | 528 | 568 | 601 |
| Medium-Low | 167 | 195 | 220 | 246 | 273 | 305 | 338 | 372 | 406 | 429 | 407 | 446 | 481 | 516 | 558 | 596 | 633 | 673 | 716 | 750 |
| Medium-High | 207 | 234 | 263 | 293 | 325 | 360 | 397 | 438 | 479 | 502 | 554 | 599 | 636 | 676 | 719 | 767 | 815 | 865 | 912 | 950 |
| High | 278 | 313 | 350 | 386 | 420 | 455 | 490 | 527 | 568 | 600 | 807 | 855 | 890 | 929 | 964 | 1040 | 1023 | 1013 | 997 | 985 |
| **Default Cool CFM** | | | | | | | | | | | | | | | | | | | | |
| Low | 102 | 123 | 143 | 168 | 194 | 217 | 242 | 268 | 294 | 316 | 213 | 243 | 273 | 304 | 337 | 373 | 410 | 450 | 491 | 517 |
| Medium-Low | 137 | 160 | 182 | 208 | 235 | 264 | 292 | 322 | 351 | 374 | 311 | 344 | 377 | 411 | 445 | 482 | 519 | 559 | 598 | 629 |
| Medium-High | 170 | 194 | 220 | 246 | 275 | 306 | 340 | 374 | 410 | 431 | 427 | 466 | 504 | 542 | 584 | 622 | 655 | 702 | 749 | 782 |
| High | 213 | 243 | 273 | 305 | 338 | 374 | 411 | 450 | 491 | 517 | 580 | 618 | 653 | 693 | 730 | 772 | 819 | 862 | 909 | 943 |
| **Decrease (-10%) Cool CFM** | | | | | | | | | | | | | | | | | | | | |
| Low | 83 | 101 | 123 | 146 | 168 | 190 | 213 | 237 | 261 | 281 | 174 | 198 | 223 | 250 | 279 | 310 | 345 | 379 | 415 | 437 |
| Medium-Low | 111 | 132 | 153 | 178 | 204 | 230 | 256 | 281 | 307 | 330 | 229 | 260 | 291 | 324 | 358 | 395 | 431 | 470 | 509 | 538 |
| Medium-High | 137 | 160 | 182 | 208 | 235 | 264 | 292 | 322 | 351 | 374 | 319 | 355 | 390 | 423 | 456 | 495 | 532 | 569 | 610 | 641 |
| High | 174 | 197 | 223 | 250 | 279 | 310 | 345 | 379 | 415 | 437 | 427 | 466 | 504 | 542 | 584 | 622 | 655 | 702 | 749 | 782 |

## BLOWER DATA

### SLP99UH090XV60C BLOWER PERFORMANCE (less filter)

**SINGLE SIDE RETURN AIR** − Air volumes in **bold** require Optional Return Air Base and field fabricated transition to accommodate 20 x 25 x 1 in. air filter in order to maintain proper air velocity.

**HEATING BLOWER PERFORMANCE - 0 through 0.8 in. w.g. External Static Pressure Range**

| Heating Adjust CFM Selections | Heating Input Range and Blower Volume - CFM | | | | | | | |
|---|---|---|---|---|---|---|---|---|
| | 35% | 40% | 50% | 60% | 70% | 80% | 90% | 100% |
| **Increase (+15%) Heat CFM** | 609 | 684 | 835 | 986 | 1136 | 1287 | 1437 | 1588 |
| **Increase (+7.5%) Heat CFM** | 551 | 623 | 769 | 914 | 1059 | 1205 | 1350 | 1496 |
| **Default Heat CFM** | 492 | 562 | 702 | 842 | 983 | 1123 | 1263 | 1403 |
| **Decrease (-7.5% ) Heat CFM** | 436 | 502 | 633 | 765 | 896 | 1028 | 1159 | 1291 |
| **Decrease (-15% ) Heat CFM** | 380 | 441 | 564 | 687 | 810 | 932 | 1055 | 1178 |

**COOLING BLOWER PERFORMANCE - 0 through 1.0 in. w.g. External Static Pressure Range**

| Cooling Adjust CFM Selections | Blower Speed Selections | | | | | | | |
|---|---|---|---|---|---|---|---|---|
| | First Stage Cool Speed - cfm | | | | Second Stage Cool Speed - cfm | | | |
| | Low | Medium-Low | Medium High | High (Default) | Low | Medium-Low | Medium High | High (Default) |
| **Increase (+10%) Cool CFM** | 1040 | 1225 | 1380 | 1550 | 1555 | 1715 | **1920** | **2135** |
| **Default Cool CFM** | 960 | 1085 | 1225 | 1415 | 1430 | 1565 | 1790 | **1980** |
| **Decrease (-10%) Cool CFM** | 840 | 990 | 1085 | 1250 | 1280 | 1450 | 1580 | 1790 |

The effect of static pressure is included in air volumes shown.

The following control configurations are available. See Installation Instructions for details and DIP switch settings.

**Heat Modes Available (Heating Blower Performance Table):**

Single stage thermostat:

- 35%, 70%, 100% input (three-stage) with time delays in-between.

Two-stage thermostat:

- Variable Rate Capacity Mode - furnace automatically adjusts firing rate based on first- and second-stage cycle times.
- W1 demand at 70% input, W2 demand at 100% input. No delay between stages.

**Cool Mode Available (Cooling Blower Performance table):**

First stage COOL (two-stage air conditioning units only) is approximately 70% of the same second stage COOL speed position.
Continuous Fan speeds are approximately 28% and 38% (DIP switch selectable) of the same second-stage COOL speed position.
minimum 380 cfm.

Lennox® Smart Zoning System Applications - Minimum blower speed is 450 cfm.

### SLP99UH090XV60C BLOWER MOTOR WATTS - COOLING

| Blower Speed Options | Motor Watts @ Various External Static Pressures - in. wg. | | | | | | | | | | | | | | | | | | | |
|---|---|---|---|---|---|---|---|---|---|---|---|---|---|---|---|---|---|---|---|---|
| | First Stage | | | | | | | | | Second Stage | | | | | | | | | | |
| | 0 | 0.1 | 0.2 | 0.3 | 0.4 | 0.5 | 0.6 | 0.7 | 0.8 | 0 | 0.1 | 0.2 | 0.3 | 0.4 | 0.5 | 0.6 | 0.7 | 0.8 | 0.9 | 1.0 |
| **Increase (+10%) Cool CFM** | | | | | | | | | | | | | | | | | | | | |
| Low | 66 | 95 | 123 | 147 | 173 | 204 | 233 | 260 | 290 | 241 | 273 | 315 | 357 | 405 | 433 | 466 | 519 | 547 | 584 | 620 |
| Medium-Low | 108 | 139 | 173 | 210 | 248 | 283 | 315 | 342 | 376 | 332 | 374 | 428 | 489 | 518 | 568 | 631 | 665 | 719 | 762 | 813 |
| Medium-High | 159 | 192 | 233 | 272 | 314 | 359 | 386 | 421 | 457 | 518 | 557 | 601 | 675 | 713 | 772 | 819 | 873 | 913 | 949 | 987 |
| High | 241 | 273 | 315 | 357 | 405 | 433 | 466 | 519 | 547 | 713 | 750 | 822 | 866 | 946 | 986 | 1042 | 1085 | 1116 | 1144 | 1184 |
| **Default Cool CFM** | | | | | | | | | | | | | | | | | | | | |
| Low | 55 | 81 | 101 | 126 | 144 | 165 | 194 | 217 | 243 | 181 | 204 | 251 | 292 | 323 | 369 | 403 | 444 | 474 | 496 | 525 |
| Medium-Low | 75 | 109 | 134 | 159 | 194 | 226 | 255 | 282 | 316 | 270 | 304 | 361 | 389 | 433 | 473 | 506 | 547 | 602 | 642 | 665 |
| Medium-High | 108 | 144 | 180 | 211 | 248 | 293 | 320 | 357 | 391 | 374 | 410 | 467 | 512 | 583 | 618 | 670 | 723 | 778 | 797 | 839 |
| High | 181 | 204 | 251 | 292 | 323 | 369 | 403 | 444 | 474 | 542 | 579 | 642 | 684 | 743 | 809 | 843 | 883 | 942 | 991 | 1019 |
| **Decrease (-10%) Cool CFM** | | | | | | | | | | | | | | | | | | | | |
| Low | 36 | 56 | 71 | 102 | 119 | 141 | 161 | 179 | 198 | 113 | 142 | 181 | 221 | 255 | 300 | 325 | 352 | 395 | 424 | 456 |
| Medium-Low | 57 | 84 | 110 | 133 | 151 | 175 | 210 | 234 | 257 | 170 | 208 | 209 | 303 | 343 | 382 | 417 | 455 | 489 | 509 | 552 |
| Medium-High | 75 | 109 | 134 | 159 | 194 | 226 | 255 | 282 | 316 | 264 | 299 | 357 | 387 | 426 | 478 | 501 | 551 | 586 | 635 | 682 |
| High | 113 | 142 | 181 | 221 | 255 | 300 | 325 | 352 | 395 | 374 | 410 | 467 | 512 | 583 | 618 | 670 | 723 | 778 | 797 | 839 |

## BLOWER DATA

### SLP99UH110XV60C BLOWER PERFORMANCE (less filter)

### BOTTOM RETURN AIR

### HEATING BLOWER PERFORMANCE - 0 through 0.8 in. w.g. External Static Pressure Range

| Heating Adjust CFM Selections | Heating Input Range and Blower Volume - CFM | | | | | | | |
|---|---|---|---|---|---|---|---|---|
| | 35% | 40% | 50% | 60% | 70% | 80% | 90% | 100% |
| Increase (+15%) Heat CFM | 767 | 861 | 1049 | 1237 | 1424 | 1612 | 1800 | 1988 |
| Increase (+7.5%) Heat CFM | 738 | 825 | 1000 | 1174 | 1349 | 1524 | 1699 | 1874 |
| Default Heat CFM | 708 | 789 | 951 | 1112 | 1274 | 1436 | 1597 | 1759 |
| Decrease (-7.5% ) Heat CFM | 655 | 731 | 883 | 1035 | 1187 | 1339 | 1491 | 1644 |
| Decrease (-15% ) Heat CFM | 602 | 673 | 816 | 958 | 1101 | 1243 | 1386 | 1528 |

### COOLING BLOWER PERFORMANCE - 0 through 1.0 in. w.g. External Static Pressure Range

| Cooling Adjust CFM Selections | Blower Speed Selections | | | | | | | |
|---|---|---|---|---|---|---|---|---|
| | First Stage Cool Speed - cfm | | | | Second Stage Cool Speed - cfm | | | |
| | Low | Medium-Low | Medium High | High (Default) | Low | Medium-Low | Medium High | High (Default) |
| Increase (+10%) Cool CFM | 1050 | 1200 | 1305 | 1485 | 1490 | 1705 | 1915 | 2130 |
| Default Cool CFM | 960 | 1100 | 1205 | 1335 | 1340 | 1540 | 1750 | 1925 |
| Decrease (-10%) Cool CFM | 860 | 995 | 1100 | 1220 | 1220 | 1390 | 1570 | 1750 |

The effect of static pressure is included in air volumes shown.

The following control configurations are available. See Installation Instructions for details and DIP switch settings.

**Heat Modes Available (Heating Blower Performance Table):**

Single stage thermostat:

- 35%, 70%, 100% input (three-stage) with time delays in-between.

Two-stage thermostat:

- Variable Rate Capacity Mode - furnace automatically adjusts firing rate based on first- and second-stage cycle times.
- W1 demand at 70% input, W2 demand at 100% input. No delay between stages.

**Cool Mode Available (Cooling Blower Performance table):**

First stage COOL (two-stage air conditioning units only) is approximately 70% of the same second stage COOL speed position.
Continuous Fan speeds are approximately 28% and 38% (DIP switch selectable) of the same second-stage COOL speed position.
minimum 380 cfm.

Lennox® Smart Zoning System Applications - Minimum blower speed is 450 cfm.

### SLP99UH110XV60C BLOWER MOTOR WATTS - COOLING

| Blower Speed Options | Motor Watts @ Various External Static Pressures - in. wg. | | | | | | | | | | | | | | | | | | | |
|---|---|---|---|---|---|---|---|---|---|---|---|---|---|---|---|---|---|---|---|---|
| | First Stage | | | | | | | | | | Second Stage | | | | | | | | | |
| | 0.1 | 0.2 | 0.3 | 0.4 | 0.5 | 0.6 | 0.7 | 0.8 | 0.9 | 1.0 | 0.1 | 0.2 | 0.3 | 0.4 | 0.5 | 0.6 | 0.7 | 0.8 | 0.9 | 1.0 |
| **Increase (+10%) Cool CFM** | | | | | | | | | | | | | | | | | | | | |
| Low | 101 | 123 | 145 | 168 | 192 | 216 | 243 | 272 | 299 | 319 | 225 | 255 | 286 | 319 | 352 | 386 | 421 | 457 | 494 | 523 |
| Medium-Low | 132 | 158 | 184 | 211 | 237 | 264 | 292 | 319 | 350 | 374 | 325 | 360 | 392 | 429 | 465 | 500 | 543 | 579 | 615 | 650 |
| Medium-High | 160 | 189 | 218 | 247 | 277 | 308 | 340 | 373 | 409 | 435 | 456 | 495 | 533 | 559 | 601 | 642 | 684 | 732 | 783 | 809 |
| High | 225 | 255 | 286 | 319 | 352 | 386 | 420 | 457 | 494 | 523 | 605 | 646 | 687 | 728 | 773 | 820 | 865 | 915 | 964 | 1002 |
| **Default Cool CFM** | | | | | | | | | | | | | | | | | | | | |
| Low | 82 | 103 | 124 | 146 | 170 | 194 | 223 | 246 | 270 | 292 | 168 | 197 | 226 | 257 | 287 | 319 | 352 | 386 | 422 | 449 |
| Medium-Low | 112 | 134 | 157 | 181 | 205 | 231 | 257 | 285 | 315 | 335 | 250 | 280 | 310 | 342 | 376 | 410 | 443 | 478 | 516 | 544 |
| Medium-High | 135 | 160 | 186 | 214 | 240 | 268 | 297 | 325 | 357 | 381 | 347 | 384 | 417 | 452 | 494 | 531 | 570 | 607 | 647 | 682 |
| High | 168 | 197 | 227 | 257 | 287 | 319 | 352 | 387 | 422 | 449 | 451 | 492 | 529 | 567 | 606 | 648 | 690 | 736 | 785 | 817 |
| **Decrease (-10%) Cool CFM** | | | | | | | | | | | | | | | | | | | | |
| Low | 65 | 85 | 106 | 127 | 151 | 174 | 197 | 219 | 241 | 263 | 137 | 164 | 190 | 216 | 244 | 271 | 299 | 329 | 360 | 384 |
| Medium-Low | 89 | 110 | 132 | 154 | 178 | 201 | 231 | 256 | 281 | 303 | 181 | 211 | 242 | 273 | 305 | 338 | 372 | 404 | 442 | 469 |
| Medium-High | 112 | 134 | 157 | 181 | 205 | 231 | 257 | 285 | 315 | 335 | 255 | 289 | 325 | 358 | 391 | 426 | 462 | 499 | 536 | 568 |
| High | 137 | 163 | 190 | 216 | 244 | 271 | 299 | 328 | 360 | 384 | 347 | 384 | 417 | 452 | 494 | 531 | 570 | 607 | 647 | 682 |

## BLOWER DATA

### SLP99UH110XV60C BLOWER PERFORMANCE (less filter)

**SINGLE SIDE RETURN AIR** − Air volumes in **bold** require Optional Return Air Base and field fabricated transition to accommodate 20 x 25 x 1 in. air filter in order to maintain proper air velocity.

**HEATING BLOWER PERFORMANCE - 0 through 0.8 in. w.g. External Static Pressure Range**

| Heating Adjust CFM Selections | Heating Input Range and Blower Volume - CFM | | | | | | | |
|---|---|---|---|---|---|---|---|---|
| | 35% | 40% | 50% | 60% | 70% | 80% | 90% | 100% |
| **Increase (+15%) Heat CFM** | 733 | 825 | 1009 | 1194 | 1378 | 1562 | 1747 | **1931** |
| **Increase (+7.5%) Heat CFM** | 708 | 794 | 967 | 1139 | 1312 | 1484 | 1657 | **1829** |
| **Default Heat CFM** | 683 | 763 | 924 | 1085 | 1245 | 1406 | 1566 | 1727 |
| **Decrease (-7.5% ) Heat CFM** | 632 | 707 | 857 | 1007 | 1157 | 1307 | 1457 | 1608 |
| **Decrease (-15% ) Heat CFM** | 580 | 650 | 790 | 929 | 1069 | 1209 | 1348 | 1488 |

**COOLING BLOWER PERFORMANCE - 0 through 1.0 in. w.g. External Static Pressure Range**

| Cooling Adjust CFM Selections | Blower Speed Selections | | | | | | | |
|---|---|---|---|---|---|---|---|---|
| | First Stage Cool Speed - cfm | | | | Second Stage Cool Speed - cfm | | | |
| | Low | Medium-Low | Medium High | High (Default) | Low | Medium-Low | Medium High | High (Default) |
| **Increase (+10%) Cool CFM** | 1050 | 1195 | 1315 | 1495 | 1515 | 1710 | **1870** | **2065** |
| **Default Cool CFM** | 960 | 1095 | 1220 | 1355 | 1360 | 1555 | 1755 | **1890** |
| **Decrease (-10%) Cool CFM** | 850 | 985 | 1095 | 1220 | 1215 | 1400 | 1555 | 1755 |

The effect of static pressure is included in air volumes shown.

The following control configurations are available. See Installation Instructions for details and DIP switch settings.

**Heat Modes Available (Heating Blower Performance Table):**

Single stage thermostat:
- 35%, 70%, 100% input (three-stage) with time delays in-between.

Two-stage thermostat:
- Variable Rate Capacity Mode - furnace automatically adjusts firing rate based on first- and second-stage cycle times.
- W1 demand at 70% input, W2 demand at 100% input. No delay between stages.

**Cool Mode Available (Cooling Blower Performance table):**

First stage COOL (two-stage air conditioning units only) is approximately 70% of the same second stage COOL speed position.
Continuous Fan speeds are approximately 28% and 38% (DIP switch selectable) of the same second-stage COOL speed position.
minimum 380 cfm.

Lennox® Smart Zoning System Applications - Minimum blower speed is 450 cfm.

### SLP99UH110XV60C BLOWER MOTOR WATTS - COOLING

| Blower Speed Options | Motor Watts @ Various External Static Pressures - in. wg. | | | | | | | | | | | | | | | | | | | |
|---|---|---|---|---|---|---|---|---|---|---|---|---|---|---|---|---|---|---|---|---|
| | First Stage | | | | | | | | | Second Stage | | | | | | | | | | |
| | 0 | 0.1 | 0.2 | 0.3 | 0.4 | 0.5 | 0.6 | 0.7 | 0.8 | 0 | 0.1 | 0.2 | 0.3 | 0.4 | 0.5 | 0.6 | 0.7 | 0.8 | 0.9 | 1.0 |
| **Increase (+10%) Cool CFM** | | | | | | | | | | | | | | | | | | | | |
| Low | 67 | 95 | 124 | 148 | 172 | 212 | 241 | 260 | 287 | 215 | 247 | 287 | 338 | 378 | 412 | 448 | 497 | 535 | 557 | 600 |
| Medium-Low | 112 | 140 | 176 | 200 | 232 | 262 | 303 | 323 | 350 | 332 | 360 | 420 | 459 | 500 | 551 | 601 | 636 | 666 | 705 | 747 |
| Medium-High | 151 | 191 | 221 | 251 | 283 | 321 | 356 | 392 | 431 | 478 | 513 | 560 | 611 | 672 | 701 | 750 | 801 | 843 | 865 | 916 |
| High | 215 | 247 | 287 | 338 | 378 | 412 | 448 | 497 | 535 | 661 | 699 | 751 | 813 | 856 | 901 | 955 | 1005 | 1047 | 1088 | 1131 |
| **Default Cool CFM** | | | | | | | | | | | | | | | | | | | | |
| Low | 53 | 82 | 99 | 128 | 153 | 172 | 199 | 231 | 251 | 156 | 198 | 217 | 270 | 297 | 328 | 371 | 403 | 440 | 474 | 515 |
| Medium-Low | 81 | 109 | 136 | 165 | 198 | 229 | 259 | 281 | 307 | 244 | 272 | 327 | 361 | 410 | 446 | 494 | 527 | 564 | 600 | 636 |
| Medium-High | 113 | 144 | 174 | 209 | 233 | 269 | 304 | 323 | 362 | 387 | 415 | 458 | 513 | 552 | 602 | 644 | 680 | 719 | 763 | 807 |
| High | 156 | 198 | 217 | 270 | 297 | 328 | 371 | 403 | 440 | 505 | 541 | 594 | 624 | 675 | 727 | 780 | 812 | 843 | 886 | 925 |
| **Decrease (-10%) Cool CFM** | | | | | | | | | | | | | | | | | | | | |
| Low | 43 | 62 | 84 | 111 | 125 | 152 | 167 | 189 | 211 | 114 | 137 | 183 | 206 | 235 | 264 | 303 | 330 | 358 | 388 | 417 |
| Medium-Low | 62 | 86 | 115 | 134 | 162 | 187 | 219 | 238 | 262 | 165 | 199 | 236 | 281 | 308 | 357 | 381 | 426 | 466 | 492 | 531 |
| Medium-High | 81 | 109 | 136 | 165 | 198 | 229 | 259 | 281 | 307 | 239 | 269 | 326 | 354 | 413 | 463 | 498 | 523 | 573 | 601 | 656 |
| High | 114 | 137 | 183 | 206 | 235 | 264 | 303 | 330 | 358 | 387 | 415 | 458 | 513 | 552 | 602 | 644 | 680 | 719 | 744 | 776 |

## BLOWER DATA

### SLP99UH135XV60D BLOWER PERFORMANCE (less filter)

### BOTTOM RETURN AIR

### HEATING BLOWER PERFORMANCE - 0 through 0.8 in. w.g. External Static Pressure Range

| Heating Adjust CFM Selections | Heating Input Range and Blower Volume - CFM | | | | | | | |
|---|---|---|---|---|---|---|---|---|
| | 35% | 40% | 50% | 60% | 70% | 80% | 90% | 100% |
| Increase (+15%) Heat CFM | 949 | 1033 | 1200 | 1367 | 1534 | 1701 | 1868 | 2035 |
| Increase (+7.5%) Heat CFM | 879 | 957 | 1113 | 1269 | 1426 | 1582 | 1738 | 1895 |
| Default Heat CFM | 808 | 881 | 1026 | 1172 | 1317 | 1463 | 1608 | 1754 |
| Decrease (-7.5% ) Heat CFM | 748 | 817 | 956 | 1095 | 1235 | 1374 | 1513 | 1652 |
| Decrease (-15% ) Heat CFM | 687 | 753 | 886 | 1019 | 1152 | 1284 | 1417 | 1550 |

### COOLING BLOWER PERFORMANCE - 0 through 1.0 in. w.g. External Static Pressure Range

| Cooling Adjust CFM Selections | Blower Speed Selections | | | | | | | |
|---|---|---|---|---|---|---|---|---|
| | First Stage Cool Speed - cfm | | | | Second Stage Cool Speed - cfm | | | |
| | Low | Medium-Low | Medium High | High (Default) | Low | Medium-Low | Medium High | High (Default) |
| Increase (+10%) Cool CFM | 1080 | 1240 | 1380 | 1570 | 1565 | 1790 | 2000 | 2250 |
| Default Cool CFM | 995 | 1130 | 1250 | 1415 | 1415 | 1615 | 1825 | 2010 |
| Decrease (-10%) Cool CFM | 900 | 1025 | 1130 | 1255 | 1265 | 1460 | 1640 | 1825 |

The effect of static pressure is included in air volumes shown.

The following control configurations are available. See Installation Instructions for details and DIP switch settings.

**Heat Modes Available (Heating Blower Performance Table):**

Single stage thermostat:

- 35%, 70%, 100% input (three-stage) with time delays in-between.

Two-stage thermostat:

- Variable Rate Capacity Mode - furnace automatically adjusts firing rate based on first- and second-stage cycle times.
- W1 demand at 70% input, W2 demand at 100% input. No delay between stages.

**Cool Mode Available (Cooling Blower Performance table):**

First stage COOL (two-stage air conditioning units only) is approximately 70% of the same second stage COOL speed position.
Continuous Fan speeds are approximately 28% and 38% (DIP switch selectable) of the same second-stage COOL speed position.
minimum 380 cfm.

Lennox® Smart Zoning System Applications - Minimum blower speed is 450 cfm.

### SLP99UH135XV60D BLOWER MOTOR WATTS - COOLING

| Blower Speed Options | Motor Watts @ Various External Static Pressures - in. wg. | | | | | | | | | | | | | | | | | | | |
|---|---|---|---|---|---|---|---|---|---|---|---|---|---|---|---|---|---|---|---|---|
| | First Stage | | | | | | | | | | Second Stage | | | | | | | | | |
| | 0.1 | 0.2 | 0.3 | 0.4 | 0.5 | 0.6 | 0.7 | 0.8 | 0.9 | 1.0 | 0.1 | 0.2 | 0.3 | 0.4 | 0.5 | 0.6 | 0.7 | 0.8 | 0.9 | 1.0 |
| **Increase (+10%) Cool CFM** | | | | | | | | | | | | | | | | | | | | |
| Low | 99 | 122 | 146 | 170 | 194 | 220 | 247 | 275 | 304 | 325 | 249 | 278 | 308 | 340 | 372 | 404 | 440 | 474 | 509 | 538 |
| Medium-Low | 134 | 161 | 188 | 215 | 244 | 274 | 303 | 337 | 372 | 395 | 347 | 383 | 417 | 454 | 491 | 525 | 567 | 603 | 641 | 676 |
| Medium-High | 176 | 204 | 234 | 264 | 295 | 326 | 359 | 393 | 428 | 455 | 470 | 507 | 547 | 588 | 630 | 673 | 719 | 767 | 818 | 852 |
| High | 249 | 278 | 308 | 339 | 372 | 403 | 440 | 473 | 509 | 538 | 661 | 703 | 745 | 791 | 838 | 890 | 940 | 992 | 1031 | N/A |
| **Default Cool CFM** | | | | | | | | | | | | | | | | | | | | |
| Low | 82 | 104 | 126 | 148 | 172 | 196 | 222 | 246 | 273 | 294 | 188 | 215 | 244 | 276 | 306 | 338 | 370 | 403 | 437 | 465 |
| Medium-Low | 110 | 134 | 158 | 183 | 209 | 235 | 263 | 293 | 323 | 345 | 271 | 300 | 333 | 365 | 396 | 430 | 465 | 502 | 540 | 568 |
| Medium-High | 137 | 164 | 191 | 218 | 248 | 278 | 309 | 342 | 378 | 401 | 363 | 398 | 434 | 473 | 510 | 547 | 588 | 627 | 668 | 703 |
| High | 188 | 216 | 245 | 276 | 306 | 338 | 370 | 403 | 437 | 465 | 481 | 519 | 558 | 599 | 639 | 681 | 724 | 772 | 821 | 855 |
| **Decrease (-10%) Cool CFM** | | | | | | | | | | | | | | | | | | | | |
| Low | 67 | 87 | 108 | 129 | 151 | 173 | 196 | 220 | 244 | 264 | 139 | 166 | 193 | 221 | 250 | 281 | 312 | 346 | 382 | 405 |
| Medium-Low | 88 | 111 | 133 | 157 | 180 | 205 | 230 | 257 | 284 | 305 | 204 | 233 | 263 | 293 | 323 | 356 | 388 | 419 | 455 | 482 |
| Medium-High | 110 | 134 | 158 | 183 | 209 | 235 | 263 | 293 | 323 | 345 | 278 | 311 | 342 | 374 | 407 | 440 | 476 | 513 | 550 | 579 |
| High | 139 | 166 | 193 | 220 | 250 | 280 | 312 | 345 | 382 | 405 | 363 | 398 | 434 | 473 | 510 | 547 | 588 | 627 | 668 | 703 |

## BLOWER DATA

### SLP99UH135XV60D BLOWER PERFORMANCE (less filter)

**SINGLE SIDE RETURN AIR** − Air volumes in **bold** require Optional Return Air Base and field fabricated transition to accommodate 20 x 25 x 1 in. air filter in order to maintain proper air velocity.

**HEATING BLOWER PERFORMANCE - 0 through 0.8 in. w.g. External Static Pressure Range**

| Heating Adjust CFM Selections | Heating Input Range and Blower Volume - CFM | | | | | | | |
|---|---|---|---|---|---|---|---|---|
| | 35% | 40% | 50% | 60% | 70% | 80% | 90% | 100% |
| **Increase (+15%) Heat CFM** | 927 | 1010 | 1175 | 1340 | 1505 | 1671 | **1836** | **2001** |
| **Increase (+7.5%) Heat CFM** | 844 | 923 | 1081 | 1239 | 1398 | 1556 | 1714 | **1873** |
| **Default Heat CFM** | 760 | 836 | 987 | 1138 | 1290 | 1441 | 1593 | 1744 |
| **Decrease (-7.5% ) Heat CFM** | 703 | 775 | 919 | 1064 | 1208 | 1352 | 1496 | 1641 |
| **Decrease (-15% ) Heat CFM** | 646 | 715 | 852 | 989 | 1126 | 1263 | 1400 | 1537 |

**COOLING BLOWER PERFORMANCE - 0 through 1.0 in. w.g. External Static Pressure Range**

| Cooling Adjust CFM Selections | Blower Speed Selections | | | | | | | |
|---|---|---|---|---|---|---|---|---|
| | First Stage Cool Speed - cfm | | | | Second Stage Cool Speed - cfm | | | |
| | Low | Medium-Low | Medium High | High (Default) | Low | Medium-Low | Medium High | High (Default) |
| **Increase (+10%) Cool CFM** | 1070 | 1235 | 1385 | 1535 | 1550 | 1720 | **1925** | **2005** |
| **Default Cool CFM** | 985 | 1110 | 1245 | 1395 | 1415 | 1605 | 1755 | **1970** |
| **Decrease (-10%) Cool CFM** | 870 | 1010 | 1110 | 1260 | 1280 | 1435 | 1610 | 1755 |

The effect of static pressure is included in air volumes shown.

The following control configurations are available. See Installation Instructions for details and DIP switch settings.

**Heat Modes Available (Heating Blower Performance Table):**

Single stage thermostat:
- 35%, 70%, 100% input (three-stage) with time delays in-between.

Two-stage thermostat:
- Variable Rate Capacity Mode - furnace automatically adjusts firing rate based on first- and second-stage cycle times.
- W1 demand at 70% input, W2 demand at 100% input. No delay between stages.

**Cool Mode Available (Cooling Blower Performance table):**

First stage COOL (two-stage air conditioning units only) is approximately 70% of the same second stage COOL speed position.
Continuous Fan speeds are approximately 28% and 38% (DIP switch selectable) of the same second-stage COOL speed position.
minimum 380 cfm.

Lennox® Smart Zoning System Applications - Minimum blower speed is 450 cfm.

### SLP99UH135XV60D BLOWER MOTOR WATTS - COOLING

| Blower Speed Options | Motor Watts @ Various External Static Pressures - in. wg. | | | | | | | | | | | | | | | | | | | |
|---|---|---|---|---|---|---|---|---|---|---|---|---|---|---|---|---|---|---|---|---|
| | First Stage | | | | | | | | | Second Stage | | | | | | | | | | |
| | 0 | 0.1 | 0.2 | 0.3 | 0.4 | 0.5 | 0.6 | 0.7 | 0.8 | 0 | 0.1 | 0.2 | 0.3 | 0.4 | 0.5 | 0.6 | 0.7 | 0.8 | 0.9 | 1.0 |
| **Increase (+10%) Cool CFM** | | | | | | | | | | | | | | | | | | | | |
| Low | 77 | 104 | 132 | 154 | 177 | 212 | 238 | 266 | 286 | 223 | 247 | 295 | 331 | 378 | 414 | 448 | 486 | 517 | 539 | 582 |
| Medium-Low | 105 | 134 | 170 | 201 | 239 | 276 | 304 | 332 | 360 | 311 | 356 | 397 | 432 | 493 | 522 | 569 | 610 | 663 | 699 | 739 |
| Medium-High | 155 | 187 | 218 | 261 | 300 | 338 | 370 | 396 | 426 | 438 | 469 | 527 | 590 | 635 | 686 | 729 | 782 | 822 | 865 | 897 |
| High | 216 | 247 | 295 | 331 | 378 | 414 | 448 | 486 | 517 | 507 | 551 | 621 | 671 | 721 | 764 | 828 | 870 | 936 | 973 | 1015 |
| **Default Cool CFM** | | | | | | | | | | | | | | | | | | | | |
| Low | 61 | 86 | 110 | 130 | 149 | 171 | 196 | 224 | 248 | 157 | 187 | 220 | 263 | 306 | 349 | 377 | 410 | 441 | 472 | 507 |
| Medium-Low | 89 | 117 | 145 | 172 | 198 | 227 | 252 | 284 | 310 | 248 | 275 | 318 | 369 | 402 | 451 | 478 | 509 | 556 | 579 | 623 |
| Medium-High | 115 | 146 | 179 | 211 | 242 | 279 | 304 | 340 | 370 | 325 | 365 | 414 | 453 | 504 | 552 | 593 | 641 | 688 | 717 | 759 |
| High | 152 | 187 | 220 | 263 | 306 | 349 | 377 | 410 | 441 | 382 | 428 | 466 | 524 | 576 | 622 | 719 | 719 | 770 | 812 | 852 |
| **Decrease (-10%) Cool CFM** | | | | | | | | | | | | | | | | | | | | |
| Low | 40 | 58 | 83 | 103 | 127 | 147 | 165 | 187 | 204 | 118 | 150 | 177 | 212 | 236 | 281 | 311 | 339 | 361 | 398 | 431 |
| Medium-Low | 67 | 90 | 116 | 138 | 160 | 180 | 206 | 236 | 256 | 168 | 200 | 238 | 279 | 323 | 356 | 388 | 429 | 462 | 490 | 539 |
| Medium-High | 86 | 115 | 142 | 164 | 198 | 224 | 250 | 275 | 310 | 249 | 279 | 328 | 363 | 407 | 448 | 479 | 513 | 560 | 584 | 632 |
| High | 118 | 150 | 177 | 212 | 236 | 281 | 311 | 339 | 361 | 288 | 329 | 365 | 413 | 444 | 493 | 529 | 575 | 604 | 651 | 693 |

## REVISIONS

| Sections | Description of Change |
|---|---|
| Dimensions | Updated Furnace/Coil Combined Dimension data for new CK40 coils. |
| Override Accessories | Added Refrigerant Detection System (RDS) Components. |

**Visit us at www.Lennox.com**
**For the latest technical information, www.LennoxPros.com**
**Contact us at 1-800-9-LENNOX**

NOTE - Due to Lennox' ongoing commitment to quality, Specifications, Ratings and Dimensions subject to change without notice and without incurring liability.
Improper installation, adjustment, alteration, service or maintenance can cause property damage or personal injury.
Installation and service must be performed by a qualified installer and servicing agency.

©2024 Lennox Industries, Inc.