PACKAGED GAS / ELECTRIC

LRP15GEK / LRP15GXK

ELITE® SERIES

Two-Stage Compressor | Variable-Speed Blower | Single-Phase | R-454B | 60Hz

RESIDENTIAL
PRODUCT SPECIFICATIONS (EHB)

SEER2 - Up to 16.0
AFUE - 81%
2 to 5 Tons
Cooling Capacity - 23,800 to 57,000 Btuh
Input Gas Heating Capacity - 72,000 to 126,000 Btuh

ELITE® SERIES

ENERGY STAR

MODEL NUMBER IDENTIFICATION

L RP 15 GE K 36 - 090 V P - 1 - A

Brand
L = Lennox

Product Type
RP = Residential Packaged Unit

Nominal SEER2

Unit Type
GE = Gas/Electric Unit
GX = Low NOx Gas/Electric Unit

Refrigerant Type
K = R-454B

Nominal Cooling Capacity
24 = 2 tons
36 = 3 tons
48 = 4 tons
60 = 5 tons

Nominal Heating Capacity Input
072 = 72,000 Btuh
090 = 90,000 Btuh
108 = 108,000 Btuh
126 = 126,000 Btuh

Blower
V = Variable Speed Blower Motor

Voltage
P = 208/230V-1phase-60Hz

Major Revision Sequence
1 = 1st Generation

Minor Revision Sequence
A = 1st Generation

Form Number 211093 | April 2026
Supersedes all previous versions

CONTENTS

Approvals and Warranty 2
Blower Data 14
Cooling Ratings 10
Dimensions 16
- Accessories 17
- Unit 16
Electrical Data 7
Features 3
Heating Ratings 13
Installation Clearances 9
Minimum Clearance To Combustible Material 9
Optional Accessories - Order Separately 8
Specifications 7
Specifications - Gas Heat 9

APPROVALS AND WARRANTY

APPROVALS

- AHRI Standard 210/240-2023 Certified
- Design Certified by ETL Intertek
- ENERGY STAR® certified units are designed to use less energy, help save money on utility bills, and help protect the environment
- Cooling system rated according to DOE test procedures
- Heating ratings are Certified by AHRI according to U.S. Department of Energy (DOE) test procedures and Federal Trade Commission (FTC) labeling regulations
- All models meet UL 60335-2-40 Refrigerant Detector Requirements
- Units are ETL Certified for the U.S. and Canada
- All models with the Optional Seismic Strapping Kit installed have Seismic Certification for 2018 International Building Code (IBC) and 2019 California Building Code (CBC) ASCE 7
- Unit and components are UL bonded for grounding to meet safety standards for servicing
- Test operated at the factory before shipment ensuring dependable operation at start-up

California Only

- These units **do not meet** the South Coast Air Quality Management District (SCAQMD) Rule 1111 and San Joaquin Valley Air Pollution Control District (SJVAPCD) Rule 4905 NOx emission limit (14 ng/J) and cannot be installed within the SCAQMD, SJVAPCD and Bay Area
- These units are approved by the California Energy Commission and meets California Nitrogen Oxides Standard (NOx) limits of 40 ng/J

WARRANTY

- Heat Exchanger:
  - Limited twenty years in residential applications
  - Limited ten years in non-residential applications
- Compressor:
  - Limited ten years in residential installations
  - Limited five years in non-residential installations
- All other covered components:
  - Limited five years in residential installations
  - Limited one year in non-residential installations

NOTE - Refer to Lennox® Basic Limited Warranty at www.Lennox.com for additional details.

FEATURES

APPLICATIONS

- Designed for outdoor installations at ground level or rooftop for residential applications

Zoning Applications
- Units are not approved for zoning applications

HEATING SYSTEM

Heat Exchanger
- Aluminized tubular steel for superior resistance to corrosion and oxidation
- Round surfaces create minimum air resistance and allow air to surround all surfaces for excellent heat transfer
- Compact design reduces space requirements in cabinet
- Laboratory life cycle tested

Inshot Burners
- Aluminized steel inshot burners provide efficient trouble free operation
- Burner venturi mixes air and gas in correct proportion for proper combustion
- Burner assembly is removable from the unit as a single component for ease of service
- Each burner may be removed individually

Two-Stage Gas Control Valve
- 24 volt redundant combination two-stage gas control valve combines manual shut off valve (On-Off), automatic electric valve (dual) and gas pressure regulation into a compact combination control

Two-Stage Combustion Air Inducer
- Heavy duty combustion air inducer prepurges heat exchanger and safely vents flue products
- Blower is controlled by the ignition control board
- Pressure switch proves blower operation before allowing gas valve to open
- Combustion air inducer operates during heating cycle
- Inducer operates for the first 10 seconds of every cooling cycle to prevent insects from nesting in the flue outlet during cooling season

Limit Control
- Factory installed on heating vestibule panel
- Automatic reset

Flame Rollout Switch
- Factory installed on burner box
- Provides protection from abnormal operating conditions
- Manual reset

Ignition Control Board
- Ignition control board with LED diagnostics

Optional Accessories

LPG/Propane Conversion Kit
- Required for field changeover from natural gas to LPG/Propane

COOLING SYSTEM

R-454B Refrigerant
- Low GWP (Global Warming Potential)
- Zero ODP (Ozone Depletion Potential)
- Low Toxicity/Lower Flammability - A2L
- Unit is factory pre-charged

Evaporator and Condenser Coils
- Copper tube with aluminum fin coils

Anti-Microbial Evaporator Coil Drain Pan
- Anti-Microbial additive resists growth of mold and mildew on drain pan which improves indoor air quality and reduces drain line blockage
- Drain pan overflow switch monitors condensate level in drain pan and shuts down unit if drain becomes clogged
- Fully insulated to reduce condensation

Condenser Fan
- Weather protected heavy duty condenser fan motor
- Coated steel fan blades for long life
- Corrosion-resistant coated steel fan guard
- Internally mounted
- Totally enclosed fan motor

High Pressure Switch
- Protects the system from high pressure conditions
- Automatic reset.

Loss of Charge Switch
- Protects compressor from damage from low/no refrigerant charge conditions
- SPST, normally-closed
- Automatic reset

Service Valves
- Fully serviceable brass valves installed in discharge and liquid lines

LOW GWP REFRIGERANT DETECTION SYSTEM (RDS)

- Complies with UL 60335-2-40 approved standard
- Required for all systems using R-454B refrigerant
- Factory installed on all units
- Consists of a leak detection sensor(s) and a mitigation control
- Ensures safe operation for systems equipped with R-454B refrigerant
- Sensor(s) monitors indoor coil area for any refrigerant leaks if they occur
- If a leak is detected the refrigerant detection system will prevent compressor and heating operation until a leak is no longer detected
- Refrigeration detection system energizes blower while a leak is detected to mitigate any concentrations of refrigerant from the unit and the system

FEATURES

COMPRESSOR

Two-Stage Scroll Compressor
- High volumetric efficiency
- Uniform suction flow
- Constant discharge flow
- Quiet operation
- A 24-volt DC solenoid valve inside the compressor controls staging
- When the solenoid is de-energized the lift ring assembly moves to unblock the compressor ports and the compressor operates at part-load or approximately 67% of its full-load capacity
- The "loading" and "unloading" of the two stage scroll is done "on the fly" without shutting off the single-speed compressor motor between stages
- Compressor motor is internally protected from excessive current and temperature
- Compressor is installed in the unit on specially formulated, resilient rubber mounts for better sound dampening and vibration free operation

Optional Accessories

Compressor Crankcase Heater
- Protects against refrigerant migration that can occur during low ambient operation

Compressor Hard Start Kit
- A PSC compressor motor does not normally need a potential relay and start capacitor
- In cases of low voltage, this kit may be required to increase the compressor starting torque

Compressor Timed-Off Control
- Prevents compressor short-cycling
- Allows time for suction and discharge pressure to equalize
- Permits compressor start-up in an unloaded condition
- Automatic reset
- Five minute delay between compressor shut-off and start-up

Low Ambient Kit (40°F)
- Cycles the outdoor fan while allowing compressor operation in the cooling cycle
- This intermittent fan operation allows the system to operate without icing the evaporator coil and losing capacity
- Designed for use in ambient temperatures no lower than 40°F

NOTE - A crankcase heater must be installed on the compressor.

SUPPLY AIR BLOWER

- Direct Drive Blower
- Blower wheel statically and dynamically balanced
- Multi-speed operation is achieved by the use of an ECM (Electronically Commutated Motor) variable speed motor
- Blower assembly easily removed for servicing

ECM Variable Speed Blower Motor
- Variable speed motor maintains specified air volume from 0 though 0.80 in. w.g. static range
- Motor is controlled by the blower control
- Change in blower speed is easily accomplished by simple jumper pin change on blower control
- Motor is resiliently mounted

CONTROLS

Refrigerant Detection System (RDS) Control
- Monitors leak detection sensor
- Connections for external RDS alarm system (not furnished)
- LED for power, monitoring and sensor status
- Test/Reset button for troubleshooting

Electronic Blower Control
- Two Stages - HEAT and COOL (with four different air volume selections for each) are made by simple jumper pins
- ADJUST jumper pin allows approximately 10% higher, normal or 10% lower motor speed selection within (COOL) speeds selected for fine tuning air volume
- See Blower Data tables

NOTE - HEAT speeds are not affected by jumper change.

- Cooling Airflow Ramp Up - At the beginning of a call for cooling, the blower will run at 82% of full airflow for 7.5 minutes
- This improves the system's moisture removal and saves blower power during cooling start
- Reduced Airflow Operation - For situations where humidity control is an issue, the variable speed motor can be connected to operate at a 25% reduction of the normal airflow rate
- The variable speed motor interface provides for connection of a thermostat with humidity control or a humidistat on the HUM terminal

NOTE - When connected, the dehumidifier resistor on the interface must be cut.

- The control should be wired to open during high humidity, which will reduce blower airflow

24 Volt Transformer
- 40VA transformer furnished and factory installed in control area

Optional Accessories

Thermostat
- Thermostat is not furnished with unit
- See Page 6

FEATURES

INDOOR AIR QUALITY (option)

Healthy Climate® PCO Accessory

- The Healthy Climate® PCO Accessory uses photo-catalytic oxidation (PCO) technology to significantly reduce levels of airborne volatile organic compounds, cooking odors and common household odors
- Lennox' Healthy Climate® PCO Accessory is mounted internally to the unit cabinet for superior indoor air quality
- Kit contains PCO cartridge, UVA lamp, UVA lamp holder assembly, ballast box, wiring harness and all necessary hardware

NOTE - The Healthy Climate® PCO Accessory cannot be used with the Internal Filter Rack Kit. High efficiency filtration external to the return air inlet and the PCO accessory in the unit is required and must be field supplied.

Internal Filter Rack Kits

- Available for 1 in. thick filters. Kit contains filter rails for mounting filters internal to unit
- Filters are not furnished and must be field provided

NOTE - The Internal Filter Rack Kit cannot be used with the Healthy Climate® PCO Accessory.

NOTE - Maximum acceptable filter efficiency is MERV 11.

CABINET

- Conditioned areas insulated with foil faced insulation
- Minimizes heat loss and reduce operating sound levels
- Powder paint for maximum durability
- Easy service access
- Steel louvered panels provides complete coil protection
- Full perimeter heavy-gauge galvanized steel base rail
- Base rails have rigging holes
- Two sides of the base rail have forklift slots
- Raised edges around duct and power entry openings in the bottom of the unit for water protection

Airflow Choice

- Units are shipped with all air openings sealed
  - For downflow (vertical) applications, remove the downflow duct covers
  - For horizontal applications, remove the horizontal duct covers

Gas Piping Inlets, Electrical Inlets and Service Valves

- Standard gas piping and field wiring inlets are located in one central area of the cabinet
- See dimension drawing
- Gauge ports are located inside the cabinet

Optional Accessories

Base Rail Opening Closure Kit

- Kit consists of panels and hardware to cover base rail rigging holes and forklift slot openings

Bottom Gas Entry Kit

- Allows gas piping through the unit base pan

Bottom Power Entry Kit

- Allows field wiring through the unit base pan

Rectangular to Round Duct Adaptor Kits

- Downflow or horizontal kits available
- Converts rectangular supply and return air openings on unit cabinet to round diameter
- Several sizes available

Clip Curb (Full Perimeter)

- Interlocking tabs fasten corners together
- No tools required
- Fully gasketed around curb perimeter and supply and return openings
- Available in 8, 14, 18 and 24 inch heights
- Shipped knocked down

Adjustable Pitch Roof Curb (Full Perimeter)

- Fully adjustable pitch curb provides a level platform for packaged units
- Allows flexible installations on roofs with sloped or uneven angles
- Adjustable from 2/12 to 6/12 pitch
- Fully gasketed around curb perimeter and supply and return openings
- Clip Curb (knock-down) and Welded models available

All Curbs

- IBC 2018 compliant
- CBC 2019 compliant
- Seismic rating - SDS 2.0g, z/h=1, Ip=1.5
- Wind rating - 240 mph (Lateral), 214 mph (Uplift)
- Maximum load rating - 800 lbs.

Adaptor Curbs (not shown)

- Curbs are regionally sourced
- Dimensions vary based upon the source

NOTE - Contact your local sales representative for a detailed cut sheet with applicable dimensions.

Strapping Kit - Seismic

- Heavy-gauge galvanized steel
- Kit contains 4 brackets and mounting hardware

CONTROL OPTIONS

E40 Smart Wi-Fi Thermostat

- 3 Htg.-2 Clg.
- 7-day, universal, programmable, touchscreen thermostat
- Controls dehumidification during cooling mode and humidification during heating mode
- Smooth Setback Recovery and compressor short-cycle protection
- One-Touch Away Mode, Smart Away™ (geo-fencing), equipment maintenance reminders and scheduling
- Smart home automation compatible with Amazon Alexa®, Google Assistant, Control4®, Building36®, Matter and IFTTT
- Lennox® Home App controls temperature, fan operation, set programs/schedules and set Away mode on a smartphone
- Lennox Smart Tech App allows the installer to commission the system and remotely turn the system on and off during setup or service call on a smartphone

M40 Smart Wi-Fi Thermostat

- 3 Htg.-2 Clg.
- 7-day, universal, programmable, touchscreen thermostat
- Smooth Setback Recovery and compressor short-cycle protection
- One-Touch Away Mode, Smart Away™ (geo-fencing), equipment maintenance reminders and scheduling
- Smart home automation compatible with Amazon Alexa®, Google Assistant, Control4®, Building36®, Matter and IFTTT
- Lennox® Home App controls temperature, fan operation, set programs/schedules and set Away mode on a smartphone
- Lennox Smart Tech App allows the installer to commission the system and remotely turn the system on and off during setup or service call on a smartphone

NOTE - Please refer to the individual Product Specifications for these products for full information.

CONTROLS - ORDERING

E40 Smart Wi-Fi Thermostat	3-3/8 x 5-3/8 x 1	**30L26**
Lennox® Smart Room Sensor	4 x 5-1/2 x 3	**22V25**
Lennox® Smart Air Quality Monitor	3-5/8 x 4-3/8 x 1-3/8	**21P02**
Lennox® Wireless Extender	4 x 5-1/2 x 2-1/2	**22V26**
M40 Smart Wi-Fi Thermostat	3-5/16 x 4-5/16 x 7/8	**30L27**
Thermostat Accessories		
[1] Discharge Air Temperature Sensor (For E40)		**88K38**
[2] Remote Outdoor Air Temperature Sensor (For dual-fuel and Humiditrol®)		**X2658**

Optional for service diagnostics (E40).

Remote Outdoor Air Temperature Sensor is used with conventional (non-Lennox® Communicating) outdoor units (sensor is furnished with Lennox® Communicating outdoor units). Allows the thermostat to display outdoor temperature. Required in dual-fuel and Humiditrol® applications.

SPECIFICATIONS

Size		24	36	48	60
Nominal Tonnage		2	3	4	5
Gas Heat Available - See Page 9		-072	-072, -090	-108	-126
Cooling Performance	Total cooling capacity - Btuh	23,800	34,000	46,000	57,000
	[1] SEER2 (Btuh/Watt)	16.0	15.2	15.2	15.2
	[1] EER2 (Btuh/Watt)	12.0	11.5	11.5	11.5
	Total Unit Watts	1906	3030	3980	5014
[2] **Sound Rating Number**	dBA	73	74	73	74
Refrigerant	Type	R-454B	R-454B	R-454B	R-454B
	Charge	5 lbs. 0 oz.	5 lbs. 0 oz.	5 lbs. 12 oz.	7 lbs. 11 oz.
Compressor Type (number)		Two-Stage Scroll (1)			
Condensate drain size (fpt) - in.		3/4	3/4	3/4	3/4
Outdoor Coil	Net face area - ft.^{2}	14.6	16.4	19.5	19.1
	Tube Diameter	5/16	5/16	5/16	5/16
	Rows	1	1	1	2
	Fins per inch	26	26	26	22
Outdoor Coil Fan	HP	1/6	1/6	1/4	1/4
	Diameter - in.	22	22	24	24
	Blades	3	3	3	3
Indoor Coil	Net face area - ft.^{2}	4.4	4.4	6.8	6.8
	Tube Diameter	3/8	3/8	3/8	3/8
	Rows	3	3	3	3
	Fins per in.	15	15	15	15
Indoor Blower	HP	1/2	1/2	3/4	1
	Wheel (Number) diameter x width - in.	(1) 10 x 6	(1) 10 x 8	(1) 10 x 10	(1) 12 x 9
Net weight of basic unit - lbs.		411	420	522	558
Shipping weight of basic unit (1 Pkg.) - lbs.		421	430	532	568

ELECTRICAL DATA

	Line voltage data (Volts-Phase-Hz)	208/230V-1-60			
	[3] Maximum overcurrent protection (MOCP) amps	25	35	45	60
	[4] Minimum Circuit Ampacity (MCA)	15.1	21.5	28.2	37.5
Compressor	Rated load amps	10.2	14.5	18.3	25.2
	Locked rotor amps	58.3	83.0	126.5	151.0
Outdoor Coil Fan Motor	Full load amps	1.0	1.0	1.7	1.7
	Locked rotor amps	1.9	1.9	3.2	3.2
Indoor Blower Motor	Full load amps	1.3	2.4	3.6	4.4
	Locked rotor amps	4.3	4.3	6.8	9.1

NOTE-Extremes of operating range are plus and minus 10% of line voltage.

[1] AHRI Certified to AHRI Standard 210/240; 95°F outdoor air temperature, 80°F db/67°F wb entering evaporator air.

[2] Sound Rating Number rated in accordance with test conditions included in AHRI Standard 270.

[3] HACR type circuit breaker or fuse.

[4] Refer to National or Canadian Electrical Code manual to determine wire, fuse and disconnect size requirements.

OPTIONAL ACCESSORIES - ORDER SEPARATELY

Item		Order Number	Size 24	36	48	60
COOLING SYSTEM						
Compressor Crankcase Heater		**27U17**	•	•		
		27P79			•	•
Compressor Hard Start Kit		**10J42**	•	•		
		12J90			•	•
Compressor Timed-Off Control		**47J28**	•	•	•	•
Low Ambient Kit (40°F)		**21D20**	•	•	•	•
CABINET						
Base Rail Opening Closure Kit		**21J84**	•	•	•	•
Rectangular to Round Duct Adaptor Kits	Downflow - 14 in. dia.	**20X82**	•	•		
	- 14 in. dia.	**21D26**			•	•
	Horizontal - 14 in. dia.	**21J92**	•	•		
	- 14 in. dia.	**21D24**			•	•
	- 16 in. dia.	**22U78**			•	•
	- 18 in. dia.	**22U79**			•	•
HEATING SYSTEM						
Bottom Gas Entry Kit		**21D34**	•	•	•	•
LPG/Propane Conversion Kit		**15C55**	•	•	•	•
ELECTRICAL						
Bottom Power Entry Kit		**21J78**	•	•	•	•
INDOOR AIR QUALITY						
[2] Healthy Climate® PCO Accessory		**Y7960**	•	•	•	•
Healthy Climate® PCO Accessory Maintenance Kit (Includes PureAir™ Cartridge and UVA lamp)		**Y7972**	•	•	•	•
[3] Internal Filter Rack Kit (filters not furnished)	(1) 20 x 20 + (1) 14 x 20	**11U73**	•	•		
	(2) 20 x 20	**11U74**			•	•
ROOF CURBS						
Clip Curbs						
	8 in. height	**21J13**	•	•		
		21J17			•	•
	14 in. height	**21J14**	•	•		
		21J19			•	•
	18 in. height	**21J15**	•	•		
		21J20			•	•
	24 in. height	**21J16**	•	•		
		21J25			•	•
Adjustable Pitch Roof Curbs						
Welded Curbs		**22V54**	•	•		
		22V55			•	•
Clip Curbs		**21J26**	•	•		
		21U04			•	•
Strapping Kits for Roof Curbs						
Strapping Kit - Seismic		**21J75**	•	•	•	•

[1] Allows the thermostat to display outdoor temperature.
[2] Filter Rack Kit cannot be used with the Healthy Climate® PCO Accessory. High efficiency filtration between the return air inlet and the PCO accessory is required and must be field supplied.
[3] Filters are not furnished and must be field provided.

SPECIFICATIONS - GAS HEAT

Size		24, 36	36	48	60
Heating Input		**-072**	**-090**	**-108**	**-126**
Heating Capacity Btuh	First Stage - Input	54,000	67,500	81,000	94,500
	Output	43,500	54,500	65,500	76,500
	Second Stage - Input	72,000	90,000	108,000	126,000
	Output	58,000	73,000	88,000	102,000
[1] AFUE		81%	81%	81%	81%
Temperature Rise - °F	First Stage	35 - 45	35 - 45	45 - 55	45 - 55
	Second Stage	45 - 55	45 - 55	50 - 60	50 - 60
Gas Supply Connection (FPT) - in.		1/2	1/2	1/2	1/2
Min. Recommended Gas Supply Pressure		5 in. w.g. Natural Gas, 11 in. w.g. LPG/Propane			

[1] Annual Fuel Utilization Efficiency based on U.S. DOE test procedures and FTC labeling regulations.

HIGH ALTITUDE DERATE

Units may be installed at altitudes up to 4500 feet above sea level without any modification. At altitudes above 4500 feet, units must be derated 4% for every 1000 feet above sea level. Example - At an altitude of 6000 feet the unit would require a derate of 24%.

NOTE - This is the only permissible derate for these units.

FIELD WIRING

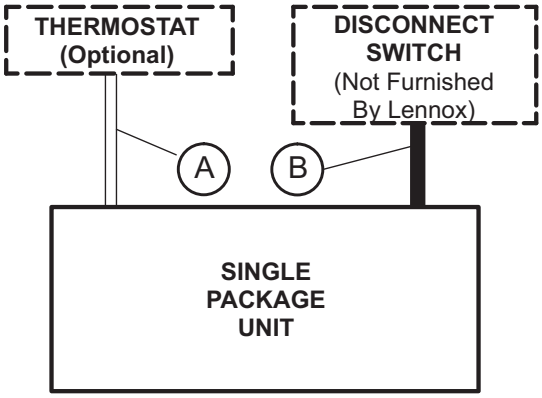

A − Seven Wire Low Voltage (Electronic)

B − Two Wire Power (See Electrical Data Table)

− Field Wiring Not Furnished −

INSTALLATION CLEARANCES

	in.	mm
Front (heat exchanger access)	24	610
Right Side (blower access)	24	610
Left Side (evaporator coil access)	24	610
Back	0	0
Top	48	1219

MINIMUM CLEARANCE TO COMBUSTIBLE MATERIAL

	in.	mm
Front	0	0
Back	0	0
Right Side (vent cover)	12	305
Left Side	0	0
Top	0	0
Below Unit	0	0

COOLING RATINGS

NOTE − For Temperatures and Capacities not shown in tables, see bulletin − Cooling Unit Rating Table Correction Factor Data in Miscellaneous Engineering Data section.

2 TON - LRP15GEK24 / LRP15GXK24 — STAGE 1

Entering Wet Bulb Temperature	Total Air Volume	Outdoor Air Temperature Entering Outdoor Coil																			
		85°F					95°F					105°F					115°F				
		Total Cool Cap.	Comp. Motor Input	Sensible To Total Ratio (S/T) Dry Bulb			Total Cool Cap.	Comp. Motor Input	Sensible To Total Ratio (S/T) Dry Bulb			Total Cool Cap.	Comp. Motor Input	Sensible To Total Ratio (S/T) Dry Bulb			Total Cool Cap.	Comp. Motor Input	Sensible To Total Ratio (S/T) Dry Bulb		
	cfm	kBtuh	kW	75°F	80°F	85°F	kBtuh	kW	75°F	80°F	85°F	kBtuh	kW	75°F	80°F	85°F	kBtuh	kW	75°F	80°F	85°F
59°F	490	17.9	.76	.94	1.00	1.00	17.3	.90	.96	1.00	1.00	16.6	1.06	.98	1.00	1.00	15.8	1.24	1.00	1.00	1.00
	540	18.5	.75	.97	1.00	1.00	17.9	.89	.99	1.00	1.00	17.2	1.05	1.00	1.00	1.00	16.4	1.23	1.00	1.00	1.00
	590	19.1	.74	1.00	1.00	1.00	18.4	.88	1.00	1.00	1.00	17.7	1.04	1.00	1.00	1.00	16.9	1.22	1.00	1.00	1.00
63°F	490	18.5	.74	.78	.91	1.00	17.8	.89	.79	.93	1.00	17.0	1.05	.81	.95	1.00	16.1	1.23	.83	.98	1.00
	540	19.0	.74	.80	.94	1.00	18.2	.89	.82	.96	1.00	17.4	1.05	.83	.99	1.00	16.5	1.23	.86	1.00	1.00
	590	19.4	.73	.83	.97	1.00	18.6	.88	.84	1.00	1.00	17.7	1.04	.86	1.00	1.00	16.9	1.22	.89	1.00	1.00
67°F	490	19.6	.73	.62	.75	.88	18.9	.87	.63	.78	.89	18.0	1.04	.65	.79	.92	17.1	1.21	.65	.81	.95
	540	20.0	.72	.64	.78	.91	19.3	.87	.65	.80	.93	18.4	1.03	.66	.81	.95	17.4	1.21	.69	.83	.98
	590	20.4	.71	.68	.80	.94	19.7	.86	.68	.82	.96	18.8	1.02	.69	.84	.99	17.8	1.20	.70	.87	1.00
71°F	490	20.6	.71	.49	.61	.73	19.9	.86	.50	.63	.75	19.0	1.02	.53	.64	.76	18.0	1.20	.51	.64	.79
	540	21.2	.70	.51	.63	.76	20.4	.85	.52	.64	.77	19.4	1.01	.51	.66	.80	18.3	1.19	.53	.67	.82
	590	21.6	.70	.52	.65	.78	20.8	.84	.52	.69	.80	19.7	1.01	.54	.67	.82	18.7	1.19	.54	.70	.85

2 TON - LRP15GEK24 / LRP15GXK24 — STAGE 2

Entering Wet Bulb Temperature	Total Air Volume	Outdoor Air Temperature Entering Outdoor Coil																			
		85°F					95°F					105°F					115°F				
		Total Cool Cap.	Comp. Motor Input	Sensible To Total Ratio (S/T) Dry Bulb			Total Cool Cap.	Comp. Motor Input	Sensible To Total Ratio (S/T) Dry Bulb			Total Cool Cap.	Comp. Motor Input	Sensible To Total Ratio (S/T) Dry Bulb			Total Cool Cap.	Comp. Motor Input	Sensible To Total Ratio (S/T) Dry Bulb		
	cfm	kBtuh	kW	75°F	80°F	85°F	kBtuh	kW	75°F	80°F	85°F	kBtuh	kW	75°F	80°F	85°F	kBtuh	kW	75°F	80°F	85°F
59°F	750	23.8	1.33	.98	1.00	1.00	23.0	1.52	.99	1.00	1.00	22.2	1.75	1.00	1.00	1.00	21.0	2.01	1.00	1.00	1.00
	830	24.6	1.32	1.00	1.00	1.00	23.8	1.52	1.00	1.00	1.00	22.8	1.75	1.00	1.00	1.00	21.8	2.01	1.00	1.00	1.00
	900	25.2	1.32	1.00	1.00	1.00	24.4	1.52	1.00	1.00	1.00	23.4	1.75	1.00	1.00	1.00	22.4	2.01	1.00	1.00	1.00
63°F	750	24.4	1.32	.80	.95	1.00	23.4	1.52	.82	.97	1.00	22.4	1.75	.84	.99	1.00	21.2	2.01	.86	1.00	1.00
	830	25.0	1.32	.83	.98	1.00	24.0	1.52	.85	1.00	1.00	22.8	1.75	.87	1.00	1.00	21.8	2.01	.90	1.00	1.00
	900	25.2	1.32	.86	1.00	1.00	24.4	1.52	.87	1.00	1.00	23.4	1.75	.89	1.00	1.00	22.2	2.01	.93	1.00	1.00
67°F	750	25.8	1.32	.65	.79	.92	24.8	1.52	.66	.80	.94	23.6	1.75	.67	.82	.96	22.4	2.01	.69	.84	.99
	830	26.2	1.32	.67	.81	.96	25.2	1.52	.68	.83	.98	24.2	1.75	.70	.85	1.00	22.8	2.01	.71	.88	1.00
	900	26.6	1.31	.69	.84	.99	25.6	1.52	.71	.86	1.00	24.6	1.75	.71	.88	1.00	23.0	2.00	.73	.91	1.00
71°F	750	27.0	1.31	.51	.65	.76	25.8	1.52	.52	.65	.78	24.6	1.75	.54	.67	.80	23.4	2.00	.54	.68	.82
	830	27.6	1.31	.53	.66	.80	26.4	1.52	.54	.67	.81	25.2	1.75	.53	.69	.83	23.8	2.00	.55	.71	.86
	900	28.0	1.31	.53	.68	.83	26.8	1.52	.54	.69	.84	25.6	1.75	.56	.71	.87	24.2	2.00	.57	.73	.89

COOLING RATINGS

NOTE − For Temperatures and Capacities not shown in tables, see bulletin − Cooling Unit Rating Table Correction Factor Data in Miscellaneous Engineering Data section.

3 TON - LRP15GEK36 / LRP15GXK36 — STAGE 1

Entering Wet Bulb Temperature	Total Air Volume	Outdoor Air Temperature Entering Outdoor Coil																			
		85°F					95°F					105°F					115°F				
		Total Cool Cap.	Comp. Motor Input	Sensible To Total Ratio (S/T) Dry Bulb			Total Cool Cap.	Comp. Motor Input	Sensible To Total Ratio (S/T) Dry Bulb			Total Cool Cap.	Comp. Motor Input	Sensible To Total Ratio (S/T) Dry Bulb			Total Cool Cap.	Comp. Motor Input	Sensible To Total Ratio (S/T) Dry Bulb		
	cfm	kBtuh	kW	75°F	80°F	85°F	kBtuh	kW	75°F	80°F	85°F	kBtuh	kW	75°F	80°F	85°F	kBtuh	kW	75°F	80°F	85°F
59°F	800	27.0	1.23	.98	1.00	1.00	26.0	1.45	1.00	1.00	1.00	25.0	1.69	1.00	1.00	1.00	24.0	1.96	1.00	1.00	1.00
	900	28.0	1.23	1.00	1.00	1.00	27.0	1.44	1.00	1.00	1.00	26.0	1.68	1.00	1.00	1.00	24.8	1.95	1.00	1.00	1.00
	1000	28.8	1.22	1.00	1.00	1.00	27.8	1.44	1.00	1.00	1.00	26.8	1.68	1.00	1.00	1.00	25.6	1.95	1.00	1.00	1.00
63°F	800	27.6	1.23	.81	.95	1.00	26.4	1.45	.82	.97	1.00	25.4	1.69	.84	.99	1.00	24.0	1.96	.86	1.00	1.00
	900	28.4	1.22	.84	.99	1.00	27.2	1.44	.86	1.00	1.00	26.0	1.68	.88	1.00	1.00	25.0	1.95	.91	1.00	1.00
	1000	29.0	1.22	.87	1.00	1.00	27.8	1.44	.89	1.00	1.00	26.8	1.68	.92	1.00	1.00	25.4	1.95	.94	1.00	1.00
67°F	800	29.2	1.22	.66	.78	.92	28.0	1.44	.65	.80	.94	26.8	1.68	.67	.82	.96	25.2	1.95	.69	.84	.99
	900	29.8	1.21	.66	.82	.96	28.6	1.44	.68	.84	.99	27.4	1.68	.70	.86	1.00	25.8	1.95	.72	.89	1.00
	1000	30.4	1.21	.70	.85	1.00	29.2	1.43	.71	.88	1.00	27.8	1.68	.73	.90	1.00	26.2	1.94	.74	.93	1.00
71°F	800	30.8	1.21	.51	.64	.76	29.4	1.43	.52	.65	.78	28.0	1.67	.53	.67	.80	26.4	1.94	.54	.68	.83
	900	31.4	1.20	.53	.66	.80	30.0	1.43	.53	.67	.82	28.4	1.67	.54	.69	.84	27.0	1.94	.55	.70	.87
	1000	31.8	1.20	.53	.68	.84	30.6	1.43	.55	.70	.86	29.0	1.67	.57	.72	.88	27.6	1.94	.56	.75	.91

3 TON - LRP15GEK36 / LRP15GXK36 — STAGE 2

Entering Wet Bulb Temperature	Total Air Volume	Outdoor Air Temperature Entering Outdoor Coil																			
		85°F					95°F					105°F					115°F				
		Total Cool Cap.	Comp. Motor Input	Sensible To Total Ratio (S/T) Dry Bulb			Total Cool Cap.	Comp. Motor Input	Sensible To Total Ratio (S/T) Dry Bulb			Total Cool Cap.	Comp. Motor Input	Sensible To Total Ratio (S/T) Dry Bulb			Total Cool Cap.	Comp. Motor Input	Sensible To Total Ratio (S/T) Dry Bulb		
	cfm	kBtuh	kW	75°F	80°F	85°F	kBtuh	kW	75°F	80°F	85°F	kBtuh	kW	75°F	80°F	85°F	kBtuh	kW	75°F	80°F	85°F
59°F	1050	35.2	2.16	.96	1.00	1.00	34.0	2.45	.98	1.00	1.00	32.6	2.78	1.00	1.00	1.00	31.0	3.16	1.00	1.00	1.00
	1160	36.4	2.17	.99	1.00	1.00	34.8	2.45	1.00	1.00	1.00	33.6	2.78	1.00	1.00	1.00	32.2	3.17	1.00	1.00	1.00
	1280	37.4	2.17	1.00	1.00	1.00	35.8	2.46	1.00	1.00	1.00	34.6	2.79	1.00	1.00	1.00	32.8	3.17	1.00	1.00	1.00
63°F	1050	36.2	2.17	.79	.93	1.00	34.6	2.45	.81	.95	1.00	33.2	2.78	.82	.98	1.00	31.6	3.17	.85	1.00	1.00
	1160	37.0	2.17	.82	.97	1.00	35.4	2.45	.84	.99	1.00	33.8	2.79	.86	1.00	1.00	32.2	3.17	.88	1.00	1.00
	1280	37.8	2.18	.85	1.00	1.00	36.0	2.46	.87	1.00	1.00	34.6	2.79	.89	1.00	1.00	32.8	3.17	.92	1.00	1.00
67°F	1050	38.5	2.18	.64	.77	.90	36.4	2.46	.66	.79	.92	34.8	2.79	.66	.81	.95	33.0	3.17	.68	.83	.98
	1160	39.0	2.18	.66	.80	.94	37.4	2.46	.67	.82	.96	35.4	2.79	.69	.84	.99	33.8	3.18	.71	.86	1.00
	1280	39.5	2.19	.68	.84	.98	38.0	2.47	.70	.85	1.00	36.0	2.80	.71	.88	1.00	34.2	3.18	.72	.90	1.00
71°F	1050	40.0	2.19	.51	.63	.75	38.5	2.47	.51	.65	.77	36.6	2.80	.52	.66	.79	34.8	3.19	.53	.67	.81
	1160	41.0	2.19	.52	.65	.79	39.0	2.47	.53	.67	.81	37.2	2.81	.54	.68	.82	35.4	3.19	.55	.70	.85
	1280	41.5	2.20	.53	.67	.81	40.0	2.48	.53	.69	.83	38.0	2.81	.55	.71	.86	35.8	3.19	.56	.74	.89

COOLING RATINGS

NOTE − For Temperatures and Capacities not shown in tables, see bulletin − Cooling Unit Rating Table Correction Factor Data in Miscellaneous Engineering Data section.

4 TON - LRP15GEK48 / LRP15GXK48 — STAGE 1

Entering Wet Bulb Temperature	Total Air Volume	Outdoor Air Temperature Entering Outdoor Coil																			
		85°F					95°F					105°F					115°F				
		Total Cool Cap.	Comp. Motor Input	Sensible To Total Ratio (S/T) Dry Bulb			Total Cool Cap.	Comp. Motor Input	Sensible To Total Ratio (S/T) Dry Bulb			Total Cool Cap.	Comp. Motor Input	Sensible To Total Ratio (S/T) Dry Bulb			Total Cool Cap.	Comp. Motor Input	Sensible To Total Ratio (S/T) Dry Bulb		
	cfm	kBtuh	kW	75°F	80°F	85°F	kBtuh	kW	75°F	80°F	85°F	kBtuh	kW	75°F	80°F	85°F	kBtuh	kW	75°F	80°F	85°F
59°F	940	33.8	1.59	.92	1.00	1.00	32.6	1.87	.94	1.00	1.00	31.2	2.17	.96	1.00	1.00	29.6	2.50	.99	1.00	1.00
	1040	35.0	1.58	.95	1.00	1.00	33.8	1.86	.97	1.00	1.00	32.4	2.16	.99	1.00	1.00	30.6	2.50	1.00	1.00	1.00
	1140	36.2	1.58	.97	1.00	1.00	34.8	1.85	.99	1.00	1.00	33.4	2.16	1.00	1.00	1.00	31.6	2.49	1.00	1.00	1.00
63°F	940	35.2	1.58	.76	.88	1.00	33.8	1.86	.77	.90	1.00	32.0	2.16	.79	.93	1.00	30.2	2.50	.81	.96	1.00
	1040	36.2	1.58	.78	.92	1.00	34.6	1.86	.80	.94	1.00	33.0	2.16	.81	.96	1.00	31.0	2.50	.84	.99	1.00
	1140	37.0	1.57	.80	.95	1.00	35.4	1.85	.82	.97	1.00	33.6	2.16	.84	.99	1.00	31.6	2.49	.86	1.00	1.00
67°F	940	37.4	1.57	.61	.74	.85	35.8	1.85	.62	.75	.87	34.0	2.16	.63	.76	.89	32.0	2.49	.65	.79	.93
	1040	38.0	1.57	.63	.76	.88	36.6	1.85	.64	.77	.90	34.8	2.15	.65	.79	.93	32.6	2.49	.67	.82	.96
	1140	39.0	1.56	.64	.78	.91	37.4	1.85	.66	.80	.94	35.4	2.15	.67	.82	.96	33.4	2.49	.69	.85	.99
71°F	940	39.0	1.56	.48	.60	.71	37.6	1.85	.49	.61	.73	35.8	2.15	.49	.62	.74	33.8	2.49	.50	.64	.76
	1040	40.5	1.56	.49	.62	.74	38.5	1.84	.49	.63	.75	36.6	2.15	.51	.64	.77	34.2	2.49	.52	.66	.80
	1140	41.0	1.56	.50	.63	.76	39.5	1.84	.50	.64	.78	37.4	2.15	.51	.66	.80	35.0	2.49	.53	.68	.82

4 TON - LRP15GEK48 / LRP15GXK48 — STAGE 2

Entering Wet Bulb Temperature	Total Air Volume	Outdoor Air Temperature Entering Outdoor Coil																			
		85°F					95°F					105°F					115°F				
		Total Cool Cap.	Comp. Motor Input	Sensible To Total Ratio (S/T) Dry Bulb			Total Cool Cap.	Comp. Motor Input	Sensible To Total Ratio (S/T) Dry Bulb			Total Cool Cap.	Comp. Motor Input	Sensible To Total Ratio (S/T) Dry Bulb			Total Cool Cap.	Comp. Motor Input	Sensible To Total Ratio (S/T) Dry Bulb		
	cfm	kBtuh	kW	75°F	80°F	85°F	kBtuh	kW	75°F	80°F	85°F	kBtuh	kW	75°F	80°F	85°F	kBtuh	kW	75°F	80°F	85°F
59°F	1350	45.5	2.80	.92	1.00	1.00	44.0	3.16	.94	1.00	1.00	42.5	3.57	.96	1.00	1.00	40.5	4.04	.99	1.00	1.00
	1520	47.5	2.82	.96	1.00	1.00	46.0	3.18	.98	1.00	1.00	44.0	3.58	1.00	1.00	1.00	42.0	4.06	1.00	1.00	1.00
	1650	48.5	2.84	.99	1.00	1.00	47.0	3.20	1.00	1.00	1.00	45.0	3.60	1.00	1.00	1.00	43.0	4.08	1.00	1.00	1.00
63°F	1350	47.5	2.82	.76	.89	1.00	45.5	3.18	.78	.91	1.00	43.5	3.58	.79	.93	1.00	41.5	4.05	.81	.96	1.00
	1520	48.5	2.84	.79	.93	1.00	47.0	3.19	.81	.95	1.00	44.5	3.60	.83	.98	1.00	42.5	4.07	.85	1.00	1.00
	1650	49.5	2.85	.81	.96	1.00	47.5	3.20	.83	.98	1.00	45.5	3.61	.85	1.00	1.00	43.0	4.08	.87	1.00	1.00
67°F	1350	50.0	2.85	.62	.74	.87	48.0	3.21	.63	.76	.88	46.0	3.61	.64	.77	.91	43.5	4.08	.65	.79	.93
	1520	51.0	2.87	.64	.77	.91	49.0	3.22	.65	.79	.93	47.0	3.63	.66	.81	.95	44.5	4.10	.68	.83	.98
	1650	52.0	2.88	.66	.80	.93	49.5	3.23	.67	.81	.96	47.5	3.64	.68	.83	.98	45.0	4.10	.70	.85	1.00
71°F	1350	52.0	2.88	.49	.61	.73	50.0	3.23	.50	.62	.74	48.0	3.64	.50	.63	.76	45.5	4.11	.50	.64	.78
	1520	53.5	2.90	.50	.63	.75	51.5	3.25	.50	.64	.77	49.0	3.65	.52	.66	.79	46.5	4.13	.52	.67	.81
	1650	54.5	2.91	.51	.65	.78	52.0	3.26	.52	.66	.79	49.5	3.67	.52	.67	.81	47.0	4.14	.53	.69	.84

COOLING RATINGS

NOTE − For Temperatures and Capacities not shown in tables, see bulletin − Cooling Unit Rating Table Correction Factor Data in Miscellaneous Engineering Data section.

5 TON - LRP15GEK60 / LRP15GXK60 — STAGE 1

Entering Wet Bulb Temperature	Total Air Volume	Outdoor Air Temperature Entering Outdoor Coil																			
		85°F					95°F					105°F					115°F				
		Total Cool Cap.	Comp. Motor Input	Sensible To Total Ratio (S/T) Dry Bulb			Total Cool Cap.	Comp. Motor Input	Sensible To Total Ratio (S/T) Dry Bulb			Total Cool Cap.	Comp. Motor Input	Sensible To Total Ratio (S/T) Dry Bulb			Total Cool Cap.	Comp. Motor Input	Sensible To Total Ratio (S/T) Dry Bulb		
	cfm	kBtuh	kW	75°F	80°F	85°F	kBtuh	kW	75°F	80°F	85°F	kBtuh	kW	75°F	80°F	85°F	kBtuh	kW	75°F	80°F	85°F
59°F	1200	41.5	1.97	.93	1.00	1.00	40.0	2.29	.95	1.00	1.00	38.5	2.64	.98	1.00	1.00	36.4	3.04	1.00	1.00	1.00
	1300	42.5	1.96	.96	1.00	1.00	41.0	2.28	.98	1.00	1.00	39.0	2.64	1.00	1.00	1.00	37.4	3.03	1.00	1.00	1.00
	1450	44.0	1.95	.99	1.00	1.00	42.5	2.27	1.00	1.00	1.00	40.5	2.63	1.00	1.00	1.00	38.5	3.03	1.00	1.00	1.00
63°F	1200	43.0	1.96	.77	.90	1.00	41.5	2.28	.78	.92	1.00	39.0	2.64	.80	.95	1.00	36.8	3.04	.82	.98	1.00
	1300	44.0	1.95	.79	.92	1.00	42.0	2.27	.80	.95	1.00	39.5	2.63	.82	.98	1.00	37.6	3.03	.85	1.00	1.00
	1450	45.0	1.94	.81	.96	1.00	43.0	2.27	.83	.99	1.00	41.0	2.63	.85	1.00	1.00	38.5	3.03	.88	1.00	1.00
67°F	1200	45.5	1.94	.62	.75	.87	43.5	2.26	.63	.76	.89	41.0	2.62	.64	.78	.92	39.0	3.02	.66	.80	.95
	1300	46.5	1.93	.63	.77	.89	44.5	2.26	.64	.78	.92	42.0	2.62	.66	.80	.95	40.0	3.02	.68	.82	.98
	1450	47.5	1.92	.65	.79	.93	45.5	2.25	.66	.81	.96	43.0	2.61	.68	.83	.99	40.5	3.01	.70	.86	1.00
71°F	1200	48.0	1.92	.48	.61	.73	46.0	2.25	.49	.62	.74	43.5	2.61	.50	.63	.76	41.5	3.01	.51	.65	.78
	1300	49.0	1.91	.50	.62	.75	47.0	2.24	.50	.63	.76	44.5	2.60	.51	.65	.78	41.5	3.01	.51	.66	.80
	1450	50.0	1.90	.50	.64	.77	48.0	2.23	.51	.65	.79	45.5	2.60	.52	.67	.82	42.5	3.00	.53	.69	.84

5 TON - LRP15GEK60 / LRP15GXK60 — STAGE 2

Entering Wet Bulb Temperature	Total Air Volume	Outdoor Air Temperature Entering Outdoor Coil																			
		85°F					95°F					105°F					115°F				
		Total Cool Cap.	Comp. Motor Input	Sensible To Total Ratio (S/T) Dry Bulb			Total Cool Cap.	Comp. Motor Input	Sensible To Total Ratio (S/T) Dry Bulb			Total Cool Cap.	Comp. Motor Input	Sensible To Total Ratio (S/T) Dry Bulb			Total Cool Cap.	Comp. Motor Input	Sensible To Total Ratio (S/T) Dry Bulb		
	cfm	kBtuh	kW	75°F	80°F	85°F	kBtuh	kW	75°F	80°F	85°F	kBtuh	kW	75°F	80°F	85°F	kBtuh	kW	75°F	80°F	85°F
59°F	1600	56.5	3.42	.91	1.00	1.00	54.5	3.85	.93	1.00	1.00	52.5	4.35	.95	1.00	1.00	50.0	4.91	.98	1.00	1.00
	1830	59.0	3.44	.95	1.00	1.00	57.0	3.88	.98	1.00	1.00	54.5	4.37	1.00	1.00	1.00	52.5	4.93	1.00	1.00	1.00
	2000	60.5	3.46	.98	1.00	1.00	58.0	3.89	1.00	1.00	1.00	56.0	4.39	1.00	1.00	1.00	53.5	4.95	1.00	1.00	1.00
63°F	1600	59.0	3.44	.76	.89	1.00	56.5	3.88	.77	.90	1.00	54.0	4.36	.78	.92	1.00	51.5	4.92	.80	.95	1.00
	1830	60.5	3.46	.79	.93	1.00	58.0	3.89	.80	.95	1.00	55.5	4.38	.82	.97	1.00	52.5	4.94	.84	1.00	1.00
	2000	61.5	3.47	.81	.96	1.00	59.0	3.90	.83	.98	1.00	56.5	4.40	.84	1.00	1.00	53.5	4.95	.87	1.00	1.00
67°F	1600	62.0	3.47	.61	.74	.86	59.0	3.90	.62	.75	.87	57.0	4.40	.63	.77	.89	54.0	4.96	.65	.78	.92
	1830	64.0	3.49	.63	.77	.90	61.0	3.92	.65	.79	.92	58.5	4.42	.66	.80	.95	55.0	4.97	.67	.82	.97
	2000	64.5	3.49	.66	.79	.93	62.0	3.94	.67	.81	.96	59.5	4.43	.67	.83	.98	56.0	4.98	.69	.85	1.00
71°F	1600	64.5	3.50	.48	.60	.72	62.5	3.94	.49	.61	.73	59.5	4.43	.49	.62	.74	56.5	4.99	.50	.64	.77
	1830	66.5	3.51	.49	.63	.75	64.0	3.95	.50	.64	.77	61.0	4.45	.51	.65	.78	58.0	5.01	.51	.67	.81
	2000	67.5	3.52	.50	.64	.78	65.0	3.96	.51	.66	.80	62.0	4.46	.52	.67	.81	59.0	5.02	.52	.69	.84

BLOWER DATA

LRP15GEK24, LRP15GXK24 Blower Performance

0 through 0.80 in. w.g. External Static Pressure Range

"ADJUST" Jumper Setting	Blower Control Jumper Speed Positions											
	"COOL" Speed - cfm				"HEAT" Speed - cfm				"CONTINUOUS FAN" Speed - cfm			
	A	B	C	D	A	B	C	D	A	B	C	D
+	1100	880	660	440	1100	1000	900	815	550	440	330	220
NORM	1000	800	600	400	1100	1000	900	815	500	400	300	200
—	900	720	540	360	1100	1000	900	815	450	360	270	180

LRP15GEK36, LRP15GXK36 Blower Performance

0 through 0.80 in. w.g. External Static Pressure Range

"ADJUST" Jumper Setting	Blower Control Jumper Speed Positions											
	"COOL" Speed - cfm				"HEAT" Speed - cfm				"CONTINUOUS FAN" Speed - cfm			
	A	B	C	D	A	B	C	D	A	B	C	D
+	1540	1320	1100	880	1400	1200	1100	975	770	660	550	440
NORM	1400	1200	1000	800	1400	1200	1100	975	700	600	500	400
—	1260	1080	900	720	1400	1200	1100	975	630	540	450	360

LRP15GEK48, LRP15GXK48 Blower Performance

0 through 0.80 in. w.g. External Static Pressure Range

"ADJUST" Jumper Setting	Blower Control Jumper Speed Positions											
	"COOL" Speed - cfm				"HEAT" Speed - cfm				"CONTINUOUS FAN" Speed - cfm			
	A	B	C	D	A	B	C	D	A	B	C	D
+	1980	1760	1540	1320	1350	1200	1100	1000	990	880	770	660
NORM	1800	1600	1400	1200	1350	1200	1100	1000	900	800	700	600
—	1620	1440	1260	1080	1350	1200	1100	1000	810	720	630	540

LRP15GEK60, LRP15GXK60 Blower Performance

0 through 0.80 in. w.g. External Static Pressure Range

"ADJUST" Jumper Setting	Blower Control Jumper Speed Positions											
	"COOL" Speed - cfm				"HEAT" Speed - cfm				"CONTINUOUS FAN" Speed - cfm			
	A	B	C	D	A	B	C	D	A	B	C	D
+	2200	1980	1760	1540	1480	1380	1280	1180	1100	990	880	770
NORM	2000	1800	1600	1400	1480	1380	1280	1180	1000	900	800	700
—	1800	1620	1440	1260	1480	1380	1280	1180	900	810	720	630

NOTE - All air data is measured external to unit without air filters.

NOTE - 1st Stage airflow is 70% of 2nd Stage airflow (full capacity) in cooling mode. In heating mode, low stage airflow is optimized for a 40°F temperature rise.

BLOWER DATA

ACCESSORY AIR RESISTANCE DATA - in. w.g.

Air Volume cfm	Rectangular to Round Duct Adaptor Kits					
	Downflow		Horizontal			
	14 in. Diameter		14 in. Diameter		16 in. Diameter	18 in. Diameter
	24, 36	48, 60	24, 36	48, 60	48, 60	48, 60
500	0.03	- - -	0.04	- - -	- - -	- - -
600	0.05	- - -	0.07	- - -	- - -	- - -
700	0.08	0.13	0.08	0.13	- - -	- - -
800	0.10	0.17	0.12	0.16	- - -	- - -
900	0.12	0.21	0.15	0.21	- - -	- - -
1000	0.17	0.24	0.19	0.25	0.11	0.03
1100	0.18	0.30	0.23	0.30	0.11	0.03
1200	0.20	0.36	0.29	0.37	0.13	0.03
1300	0.26	0.43	0.31	0.43	0.17	0.03
1400	0.31	0.50	0.39	0.51	0.20	0.03
1500	- - -	0.57	- - -	0.57	0.21	0.05
1600	- - -	0.63	- - -	0.65	0.26	0.05
1700	- - -	0.71	- - -	0.72	0.30	0.06
1800	- - -	0.80	- - -	0.81	0.30	0.06
1900	- - -	0.91	- - -	0.90	0.40	0.06
2000	- - -	0.99	- - -	1.01	0.41	0.06

DIMENSIONS UNIT

Size	CORNER WEIGHTS								CENTER OF GRAVITY			
	AA		BB		CC		DD		EE		FF	
	lbs.	kg	lbs.	kg	lbs.	kg	lbs.	kg	in.	mm	in.	mm
24	102	46	103	47	110	50	110	50	23-1/4	591	21-3/4	552
36	105	48	106	48	113	51	113	51	23-1/4	591	21-3/4	552
48	129	59	130	59	139	63	138	63	27-1/2	699	21-3/4	552
60	138	63	138	63	148	67	148	67	27-1/2	699	21-3/4	552

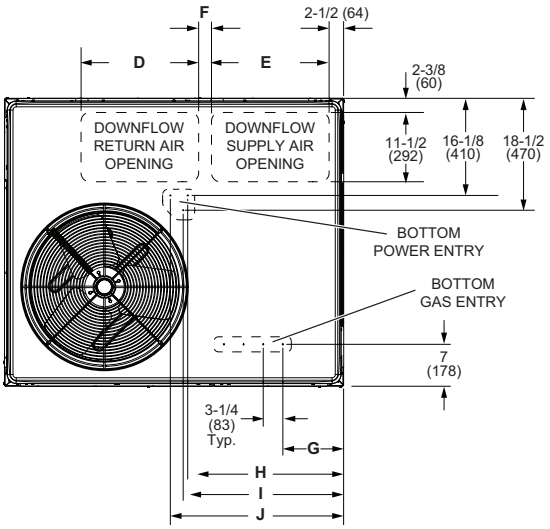

TOP VIEW (Base)

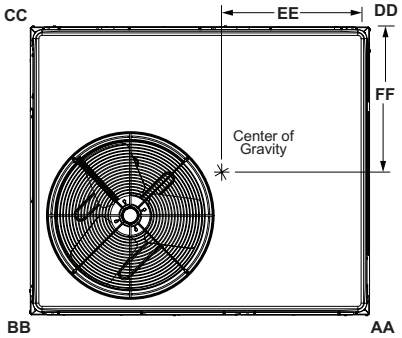

TOP VIEW
(Corner Weight and Center of Gravity)

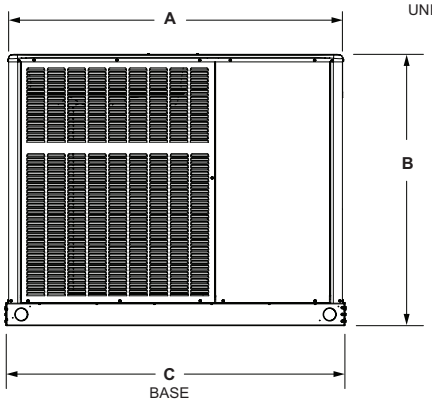

FRONT VIEW

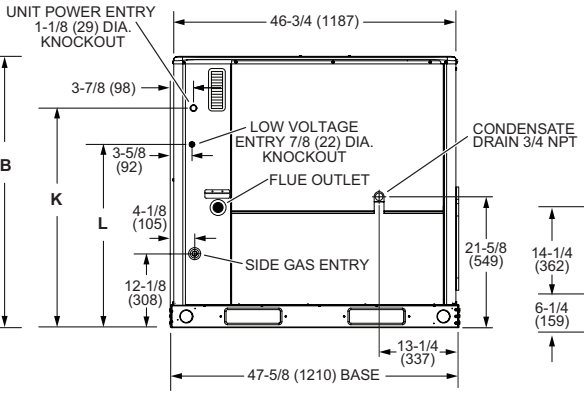

RIGHT SIDE VIEW

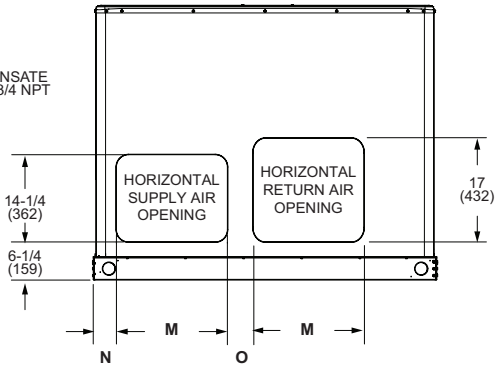

BACK VIEW

Size	A		B		C		D		E		F		G		H	
	in.	mm	in.	mm	in.	mm	in.	mm	in.	mm	in.	mm	in.	mm	in.	mm
24, 30, 36	47-5/8	1210	40-7/8	1038	47-5/8	1210	16-3/4	425	14	356	2	51	4-1/2	114	20-1/4	514
42, 48, 60	55-1/4	1403	44-7/8	1140	56-1/8	1426	19-1/2	495	19-1/2	495	2-1/8	54	10	254	25-7/8	657

Size	I		J		K		L		M		N		O	
	in.	mm	in.	mm	in.	mm	in.	mm	in.	mm	in.	mm	in.	mm
24, 30, 36	21	533	23-1/4	591	32-1/4	819	26-1/4	667	13-1/2	343	3-1/8	79	5-7/8	149
42, 48, 60	26-1/2	673	26-3/4	679	36-1/4	921	30-1/4	768	18-1/4	463	3-3/4	95	4-3/8	111

CLIP CURB

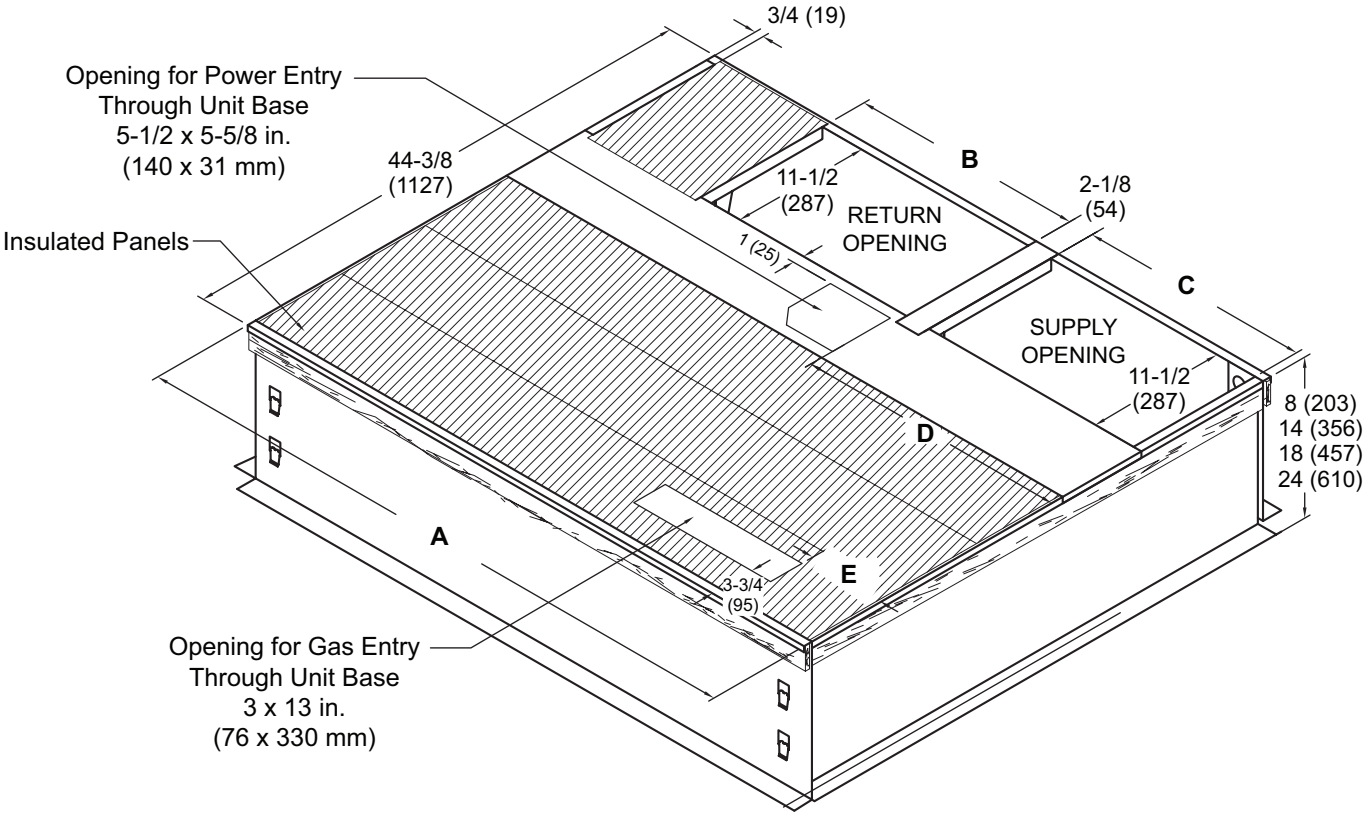

NOTE - Roof deck may be omitted within confines of curb.

TYPICAL FLASHING DETAIL FOR ROOF CURB

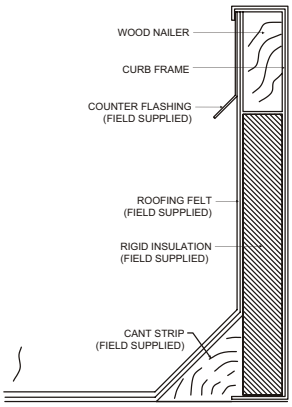

DETAIL ROOF CURB

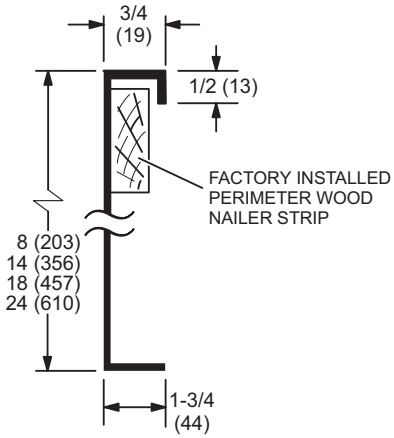

Usage	A		B		C		D		E	
	in.	mm	in.	mm	in.	mm	in.	mm	in.	mm
24, 36	44-3/8	1127	16-7/8	429	13-7/8	352	17-1/4	438	1-1/4	32
48, 60	52-7/8	1343	19-1/2	380	19-1/2	352	23-1/8	587	7	178

ADJUSTABLE PITCH ROOF WELDED CURB

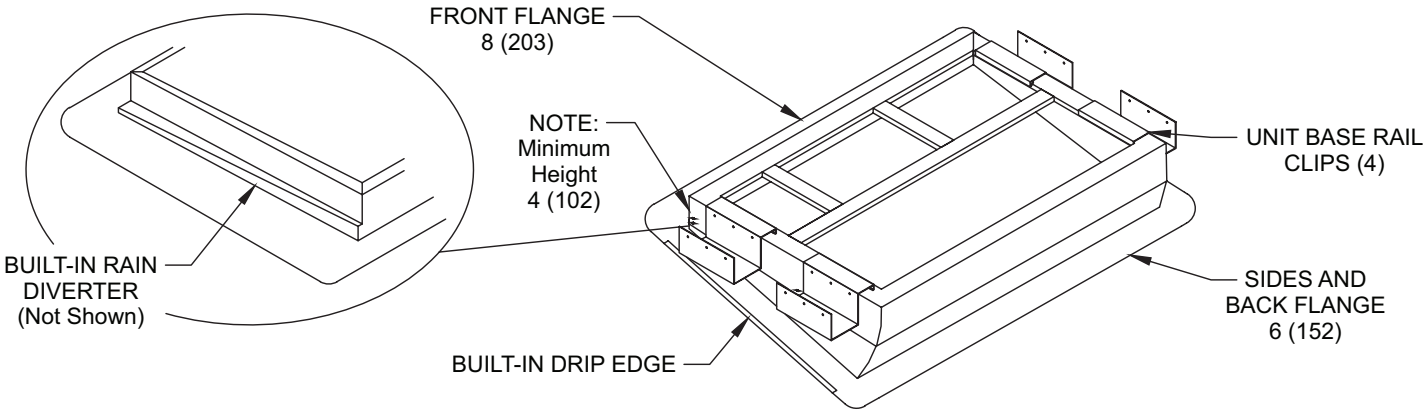

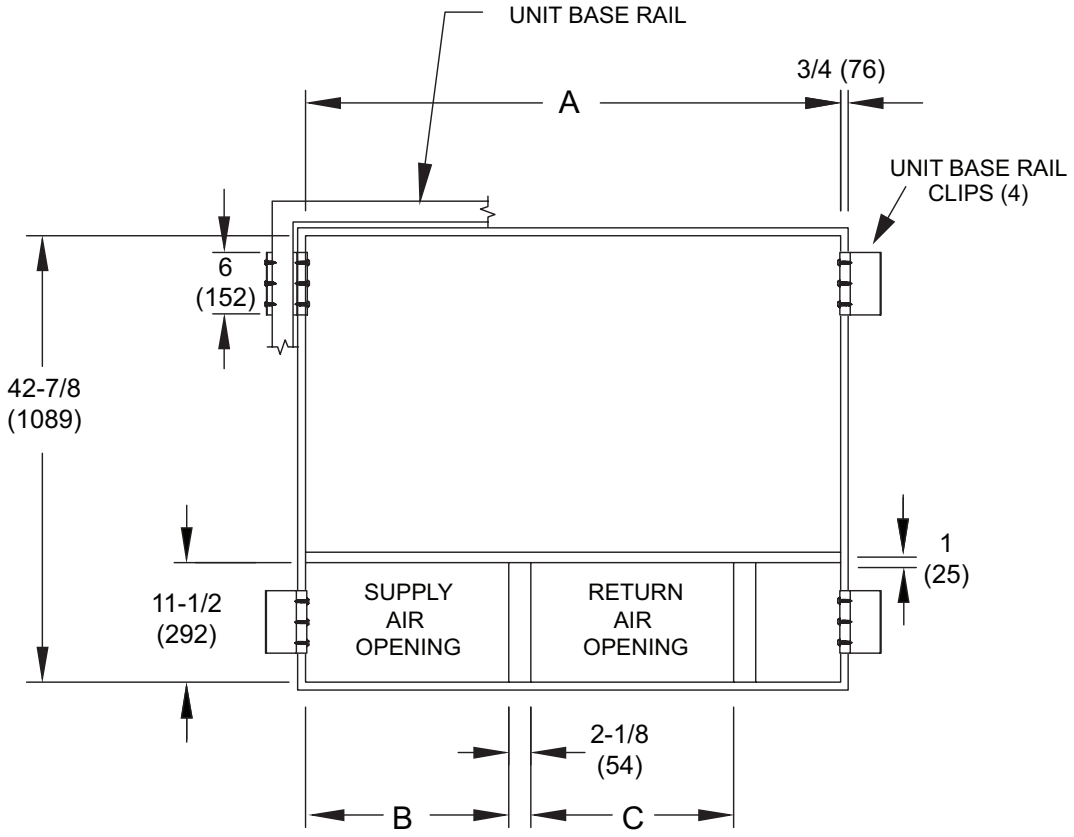

Usage	A		B		C	
	in.	mm	in.	mm	in.	mm
24, 36	42-7/8	1089	13-7/8	352	16-7/8	429
48, 60	51-3/8	1305	19-1/2	495	19-1/2	495

ADJUSTABLE PITCH ROOF CLIP CURB

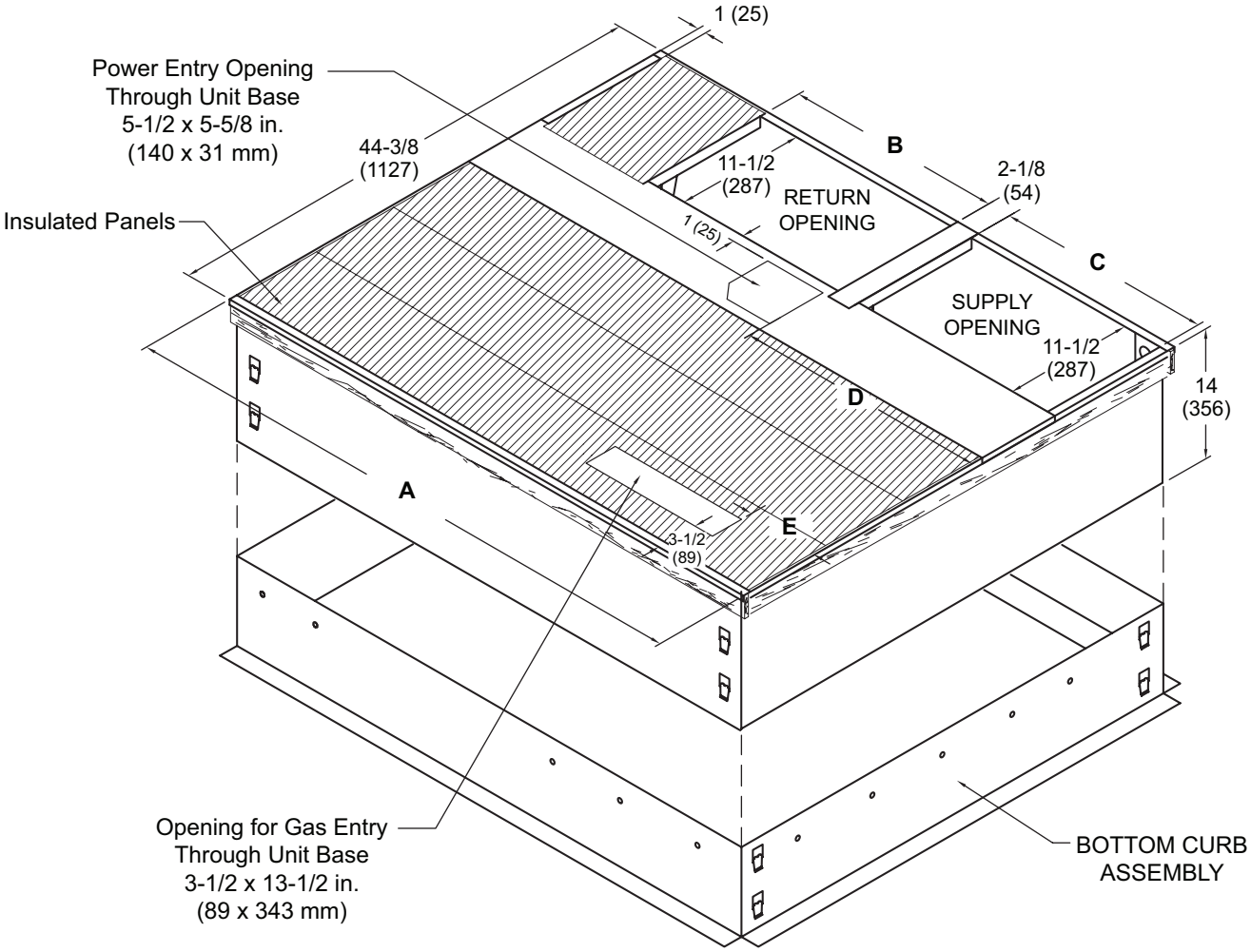

NOTE - Roof deck may be omitted within confines of curb.

TYPICAL FLASHING DETAIL FOR ROOF CURB

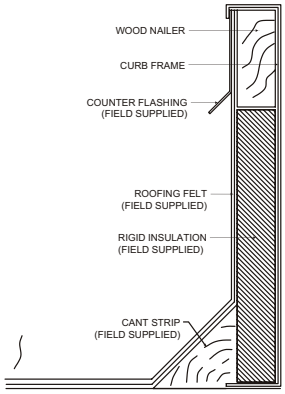

DETAIL ROOF CURB

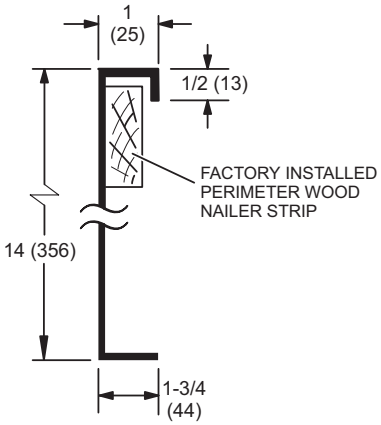

Usage	A		B		C		D		E	
	in.	mm	in.	mm	in.	mm	in.	mm	in.	mm
24, 36	44-3/8	1127	16-7/8	429	13-7/8	352	17-1/4	438	1-1/4	32
48, 60	52-7/8	1343	19-1/2	380	19-1/2	352	23-1/8	587	7	178

REVISIONS

Sections	Description of Change
Control Options	Updated to reflect latest product offering.
Dimensions	Updated dimension table.

Visit us at www.Lennox.com
For the latest technical information, www.LennoxPros.com
Contact us at 1-800-9-LENNOX

NOTE - Due to Lennox' ongoing commitment to quality, Specifications, Ratings and Dimensions subject to change without notice and without incurring liability.
Improper installation, adjustment, alteration, service or maintenance can cause property damage or personal injury.
Installation and service must be performed by a qualified installer and servicing agency.

©2026 Lennox Industries, Inc.