PACKAGED HEAT PUMP

LRP16HP

Two-Stage Compressor - Variable Speed - Single-Phase - 60Hz

RESIDENTIAL
PRODUCT SPECIFICATIONS

Bulletin No. 210774
January 2023
Supersedes September 2022

SEER2 - up to 15.2 / SEER - up to 16.0
HSPF2 - 6.7 / HSPF - 8.2
2 to 5 Tons
Cooling Capacity - 23,000 to 57,000 Btuh
Heating Capacity - 22,000 to 56,000 Btuh
Optional Electric Heat - 5 to 20 kW

MODEL NUMBER IDENTIFICATION

L RP 16 HP 36 V P - 3 - A

- **Brand** — L = Lennox
- **Product Type** — RP = Residential Packaged Unit
- **Nominal Efficiency**
- **Unit Type** — HP = Packaged Heat Pump
- **Nominal Cooling Capacity** — 24 = 2 tons; 36 = 3 tons; 48 = 4 tons; 60 = 5 tons
- **Blower** — V = Variable Speed Blower Motor
- **Voltage** — P = 208/230V-1phase-60Hz
- **Major Revision Sequence** — 3 = 3rd Generation
- **Minor Revision Sequence** — A = 1st Generation

CONTENTS

Approvals And Warranty 2
Blower Data 10
Cooling Ratings - 2017 11
Cooling Ratings - 2023 13
Dimensions 16
- Accessories 17
- Unit 16
Electrical Data 7
Electric Heat Capacities 9
Electric Heat Data 9
Features 3
Field Wiring 15
Heating Ratings 15
Installation Clearances 15
Model Number Identification. 1
Optional Accessories - Order Separately 8
Specifications 7

APPROVALS AND WARRANTY

APPROVALS

- AHRI Standard 210/240 Certified
- Design Certified by ETL Intertek
- Cooling system rated according to DOE test procedures
- Heating ratings are Certified by AHRI according to U.S. Department of Energy (DOE) test procedures and Federal Trade Commission (FTC) labeling regulations
- Units are ETL Certified for the U.S. and Canada
- All models with the Optional Seismic Strapping Kit installed have Seismic Certification for 2018 International Building Code (IBC) and 2019 California Building Code (CBC) ASCE 7
- Unit and components are UL bonded for grounding to meet safety standards for servicing
- Optional electric heaters are ETL listed for the US and Canada and are rated and tested according to DOE test procedures and FTC labeling regulations
- Test operated at the factory before shipment ensuring dependable operation at start-up

WARRANTY

- Compressor:
  - Limited ten years in residential installations
  - Limited five years in non-residential installations
- All other covered components:
  - Limited five years in residential installations
  - Limited one year in non-residential installations

NOTE - Refer to Lennox® Basic Limited Warranty at www.Lennox.com for additional details.

FEATURES

APPLICATIONS

- Designed for outdoor installations at ground level or rooftop for residential applications.

NOTE - Units are not approved for zoning applications.

REFRIGERATION SYSTEM

R-410A Refrigerant
- Non-chlorine, ozone friendly
- Unit pre-charged with refrigerant

Indoor and Outdoor Coils
- Copper tube with aluminum fin coils

Anti-Microbial Indoor Coil Drain Pan
- Anti-Microbial additive resists growth of mold and mildew on drain pan which improves indoor air quality and reduces drain line blockage
- Drain pan overflow switch monitors condensate level in drain pan and shuts down unit if drain becomes clogged
- Fully insulated to reduce condensation

Outdoor Coil Fan
- Weather protected heavy duty condenser fan motor
- Coated steel fan blades for long life
- Corrosion-resistant coated steel fan guard
- Internally mounted
- Totally enclosed fan motor

Four-Way Reversing Valve
- Rapid changeover of refrigerant flow direction from cooling to heating and vice versa
- Operates on pressure differential between outdoor unit and indoor coil
- Factory installed

High Pressure Switch
- Protects the system from high pressure conditions
- Automatic reset

Loss of Charge Switch
- Shuts off unit if suction pressure falls below setting
- Loss of charge and freeze-up protection

COMPRESSOR

Two-Stage Scroll Compressor
- High volumetric efficiency
- Uniform suction flow
- Constant discharge flow
- Quiet operation

Compressor Operation
- Two involute spiral scrolls matched together generate a series of crescent shaped gas pockets between them
- During compression, one scroll remains stationary while the other scroll orbits around it
- Gas is drawn into the outer pocket, the pocket is sealed as the scroll rotates
- As the spiral movement continues, gas pockets are pushed to the center of the scrolls
- Volume between the pockets is simultaneously reduced
- When the pocket reaches the center, gas is now at high pressure and is forced out of a port located in the center of the fixed scrolls
- During compression, several pockets are compressed simultaneously resulting in a smooth continuous compression cycle
- Continuous flank contact, maintained by centrifugal force, minimizes gas leakage and maximizes efficiency
- Compressor is tolerant to the effects of slugging and contaminants
- If this occurs, scrolls separate, allowing liquid or contaminants to be worked toward the center and discharged
- During the compression process, there are several pockets in the scroll that are compressing gas
- Modulation is achieved by venting a portion of the gas in the first suction pocket back to the low side of the compressor thereby reducing the effective displacement of the compressor
- A 24-volt DC solenoid valve inside the compressor controls staging
- When the 3-way solenoid is energized it moves the lift ring assembly to block the ports and the compressor operates at full-load or 100% capacity
- When the solenoid is de-energized the lift ring assembly moves to unblock the compressor ports and the compressor operates at part-load or approximately 67% of its full-load capacity
- The “loading” and “unloading” of the two stage scroll is done “on the fly” without shutting off the single-speed compressor motor between stages
- Low gas pulses during compression reduces operational sound levels
- Compressor motor is internally protected from excessive current and temperature
- Compressor is installed in the unit on specially formulated, resilient rubber mounts for better sound dampening and vibration free operation

COMPRESSOR (continued)

Optional Accessories

Compressor Crankcase Heater
- Protects against refrigerant migration that can occur during low ambient operation

Compressor Hard Start Kit
- A PSC compressor motor does not normally need a potential relay and start capacitor
- In cases of low voltage, kit may be required to increase the compressor starting torque

Compressor Timed-Off Control
- Prevents compressor short-cycling
- Allows time for suction and discharge pressure to equalize
- Permits compressor start-up in an unloaded condition
- Automatic reset
- Five minute delay between compressor shut-off and start-up

Low Ambient Kit (40°F)
- Cycles the outdoor fan while allowing compressor operation in the cooling cycle
- This intermittent fan operation allows the system to operate without icing the evaporator coil and losing capacity
- Designed for use in ambient temperatures no lower than 40°F

NOTE - A crankcase heater must be installed on the compressor.

SUPPLY AIR BLOWER

Direct Drive Blower
- Blower wheel statically and dynamically balanced
- Multi-speed operation is achieved by the use of an ECM (Electronically Commutated Motor) variable speed motor
- Blower assembly easily removed for servicing

ECM Variable Speed Blower Motor
- Variable speed motor maintains specified air volume from 0 though 0.80 in. w.g. static range
- Motor is controlled by the blower control
- Change in blower speed is easily accomplished by simple jumper pin change on blower control
- Motor is resiliently mounted

INDOOR AIR QUALITY (Option)

Healthy Climate® PCO Accessory
- The Healthy Climate® PCO Accessory uses photocatalytic oxidation (PCO) technology to significantly reduce levels of airborne volatile organic compounds, cooking odors and common household odors
- Lennox' Healthy Climate® PCO Accessory is mounted internally to the unit cabinet for superior indoor air quality
- Kit contains PCO cartridge, UVA lamp, UVA lamp holder assembly, ballast box, wiring harness and all necessary hardware

NOTE - The Healthy Climate® PCO Accessory cannot be used with the Internal Filter Rack Kit. High efficiency filtration external to the return air inlet and the PCO accessory in the unit is required and must be field supplied.

Internal Filter Rack Kits
- Available for 1 in. thick filters. Kit contains filter rails for mounting filters internal to unit
- Filters are not furnished and must be field provided

NOTE - The Internal Filter Rack Kit cannot be used with the Healthy Climate® PCO Accessory.

NOTE - Maximum acceptable filter efficiency is MERV 11.

ELECTRIC HEAT (Option)

- Field install internal to unit cabinet
- 5 - 20 kW sizes
- Helix wound nichrome heating elements exposed directly in air stream resulting in instant heat transfer, low element temperatures and long service life
- Cutoff limit control provides positive protection in case of excessive temperatures.
- Factory assembled with controls installed and wired.

Optional Accessories

Single Point Power Supply Kits
- Control Box used with optional electric heat
- For single power supply connected to multi-circuit electric heat

NOTE - Side power entry only.

FEATURES

CONTROLS

Electronic Blower Control

- Two Stages - HEAT and COOL (with four different air volume selections for each) are made by simple jumper pins
- ADJUST jumper pin allows approximately 10% higher, normal or 10% lower motor speed selection within (COOL) speeds selected for fine tuning air volume
- See Blower Data tables

NOTE - HEAT speeds are not affected by jumper change.

- Cooling Airflow Ramp Up - At the beginning of a call for cooling, the blower will run at 82% of full airflow for 7.5 minutes
- Improves the system's moisture removal and saves blower power during cooling start
- Reduced Airflow Operation - For situations where humidity control is an issue, the variable speed motor can be connected to operate at a 25% reduction of the normal airflow rate
- Variable speed motor interface provides for connection of a thermostat with humidity control or a humidistat on the HUM terminal

NOTE - When connected, the dehumidifier resistor on the interface must be cut.

- The control should be wired to open during high humidity, which will reduce blower airflow

Defrost Control

- Defrost Control
- Furnished as standard
- Provides a demand defrost cycle whenever system heating performance falls below optimum levels
- Sensing element on coil determines when defrost cycle is required and when to terminate cycle
- Anti-short cycle (5 minutes) incorporated into the control
- Diagnostic LEDs furnished as an aid in troubleshooting
- Conveniently located in control box

24 Volt Transformer

- 40VA transformer furnished and factory installed in control area

Optional Accessories

M30 Smart Wi-Fi Thermostat

- Wi-Fi-enabled, electronic 7-day, universal, multi-stage, programmable, touchscreen thermostat
- 4 Heat/2 Cool
- Auto-changeover
- Dual-fuel control with optional outdoor sensor
- Controls dehumidification during cooling mode and humidification during heating mode

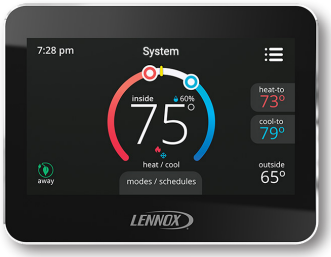

- Offers enhanced capabilities including humidification / dehumidification / dewpoint measurement and control, Humiditrol® control, and equipment maintenance reminders
- Easy to read 4.3 in. color touchscreen (measured diagonally)
- LCD display with backlight shows the current and set temperature, time, inside relative humidity, system status (operating mode and schedules) and outside temperature (optional outdoor sensor required)
- Smooth Setback Recovery starts system early to achieve setpoint at start of program period
- Compressor short-cycle protection (5 minutes)
- Up to four separate schedules are available plus Schedule IQ™
- One-Touch Away Mode - A quick and easy way to set the cooling and heating setpoints while away
- Smart Away™ - Uses geo-fencing technology to determine when the homeowner is within a predetermined distance from the home to operate the system when leaving, away and arriving
- Wi-Fi remote monitoring and adjustment through a home wireless network for desktop PCs, laptops and apps for smartphones or tablets
- Smart home automation compatible with Amazon Alexa®, Google Assistant and IFTTT
- Service Dashboard features online real-time monitoring of installed Lennox® thermostats

NOTE - See the Lennox® M30 Smart Wi-Fi Thermostat Product Specifications bulletin in the Controls section for more information.

Remote Outdoor Temperature Sensor

- Used with the M30 Smart Wi-Fi Thermostat
- Outdoor sensor allows thermostat to display outdoor temperature

NOTE - Remote Outdoor Temperature Sensor is recommended for heat pump balance point control to lock out some of the electric heating elements where two-stage control is applicable.

Thermostat

- Thermostat is not furnished with unit
- Lennox Price Book for selection

FEATURES

CABINET

- Conditioned areas insulated with foil faced insulation
- Minimizes heat loss and reduce operating sound levels
- Powder paint for maximum durability
- Easy service access
- Steel louvered panels provides complete coil protection
- Full perimeter heavy-gauge galvanized steel base rail
- Base rails have rigging holes
- Two sides of the base rail have forklift slots
- Raised edges around duct and power entry openings in the bottom of the unit for water protection

Airflow Choice

- Units are shipped with all air openings sealed
  - For downflow (vertical) applications, remove the downflow duct covers
  - For horizontal applications, remove the horizontal duct covers

Electrical Inlets and Service Valves

- Standard field wiring electrical inlets are located in one central area of the cabinet
- See dimension drawing
- Gauge ports are located inside the cabinet

Optional Accessories

Base Rail Opening Closure Kit

- Kit consists of panels and hardware to cover base rail rigging holes and forklift slot openings

Bottom Gas Entry Kit

- Allows gas piping through the unit base pan

Bottom Power Entry Kit

- Allows field wiring through the unit base pan

Rectangular to Round Duct Adaptor Kits

- Downflow or horizontal kits available
- Converts rectangular supply and return air openings on unit cabinet to round diameter
- Several sizes available

Clip Curb (Full Perimeter)

- Interlocking tabs fasten corners together
- No tools required
- Fully gasketed around curb perimeter and supply and return openings
- Available in 8, 14, 18 and 24 inch heights
- Shipped knocked down

Adjustable Pitch Roof Curb (Full Perimeter)

- Fully adjustable pitch curb provides a level platform for packaged units
- Allows flexible installations on roofs with sloped or uneven angles
- Adjustable from 2/12 to 6/12 pitch
- Fully gasketed around curb perimeter and supply and return openings
- Clip Curb (knock-down) and Welded models available

All Curbs

- IBC 2018 compliant
- CBC 2019 compliant
- Seismic rating - SDS 2.0g, z/h=1, Ip=1.5
- Wind rating - 240 mph (Lateral), 214 mph (Uplift)
- Maximum load rating - 800 lbs.

Adaptor Curbs (not shown)

- Curbs are regionally sourced
- Dimensions vary based upon the source

NOTE - Contact your local sales representative for a detailed cut sheet with applicable dimensions.

Strapping Kit - Hurricane

- Galvanized steel .07 in. thick minimum
- Attaches unit base rails to host structure
- Separate kits available for Slab Mount or Rail Mount

Strapping Kit - Seismic

- Heavy-gauge galvanized steel
- Kit contains 4 brackets and mounting hardware

SPECIFICATIONS

General Data		Model No.	LRP16HP24	LRP16HP36	LRP16HP48	LRP16HP60
		Nominal Tonnage	2	3	4	5
Cooling / Heating Performance	Cooling	Total capacity - Btuh	23,000	34,500	45,000	55,500
		[1] SEER2 (Btuh/Watt)	15.2	15.2	15.2	14.1
		[1] EER2 (Btuh/Watt)	12.0	11.5	11.4	10.7
		Total capacity - Btuh	23,000	35,000	47,000	57,000
		[1] SEER (Btuh/Watt)	16.0	16.0	16.0	15.5
		EER (Btuh/Watt)	12.0	12.0	12.0	11.5
		Total unit watts	1910	2970	3910	5180
	High Temp. Heat	Total capacity - Btuh	21,400	33,200	45,500	58.000
		HSPF2 (Region IV)	6.7	6.7	6.7	6.7
		COP2	3.49	3.29	3.46	3.51
		Total capacity - Btuh	22,000	34,000	46,000	56,000
		HSPF (Region IV)	8.2	8.2	8.2	8.2
		COP	3.6	3.6	3.6	3.7
		Total unit watts	1800	2960	3930	5030
	Low Temp. Heat	Total capacity - Btuh	11,900	19,700	24,700	35,700
		COP2	2.1	2.2	2.09	2.34
		Total capacity - Btuh	11,900	19,700	26,600	37,200
		COP	2.36	2.28	2.23	2.57
		Total unit watts	1660	2520	3460	4470
[2] Sound Rating Number (dBA)			71	71	74	74
Refrigerant		Type	R-410A	R-410A	R-410A	R-410A
		Charge	5 lbs. 0 oz.	7 lbs. 6 oz.	10 lbs. 8 oz.	10 lbs. 8 oz.
Condensate drain size (fpt) - in.			3/4	3/4	3/4	3/4
Outdoor Coil		Net Face Area - sq. ft.	16.3	15.5	18.6	18.6
		Tube diameter - in.	5/16	5/16	5/16	5/16
		Number of Rows	1	2	2	2
		Fins per in.	22	22	22	22
Outdoor Coil Fan		Motor horsepower	1/2	1/2	1/2	1/2
		Diameter - in.	22	22	24	24
		Number of blades	3	3	3	3
Indoor Coil		Net Face Area - sq. ft.	4.4	4.4	6.8	6.8
		Tube Diameter - in.	5/16	3/8	3/8	3/8
		Number of Rows	3	3	3	3
		Fins per Inch	15	15	15	15
Indoor Blower		Blower wheel size dia. x width - in.	10 x 6	10 x 8	10 x 10	12 x 10
		Motor horsepower	1/2	1/2	3/4	1
Net weight of basic unit - lbs.			411	446	526	541
Shipping weight of basic unit (1 Pkg.) - lbs.			421	456	536	551
Electrical characteristics (60 hz)			208/230V-1ph-60hz			

ELECTRICAL DATA

	Line voltage data - 60 Hz 1 phase	**208/230V**	**208/230V**	**208/230V**	**208/230V**
	[3] Maximum overcurrent protection (MOCP) amps	25	40	50	60
	[4] Minimum Circuit Ampacity (MCA)	18	24.7	31.8	38.3
Compressor	Rated load amps	11.6	16.1	21.1	23.4
	Locked rotor amps	58.3	83	104	118
Outdoor Coil Fan Motor	Full load amps	2.3	2.3	2.3	3.6
Indoor Blower Motor	Full load amps	1.1	2.3	3.1	5.4

NOTE - Shaded areas indicate AHRI 2023 Ratings.

[1] AHRI Certified to AHRI Standard 210/240:
Cooling Ratings - 95°F outdoor air temperature and 80°F db/67°F wb entering indoor coil air.
High Temperature Heating Ratings - 47°F db/43°F wb outdoor air temperature and 70°F entering indoor coil air.
Low Temperature Heating Ratings - 17°F db/15°F wb outdoor air temperature and 70°F entering indoor coil air.

[2] Sound Rating Number rated in accordance with test conditions included in AHRI Standard 270.

[3] HACR type circuit breaker or fuse.

[4] Refer to National or Canadian Electrical Code manual to determine wire, fuse and disconnect size requirements.

OPTIONAL ACCESSORIES - ORDER SEPARATELY

Item		Catalog No.	Unit Model No. 24	36	48	60
CONTROLS						
M30 Smart Wi-Fi Thermostat		**15Z69**	•	•	•	•
[1] Remote Outdoor Temperature Sensor		**X2658**	•	•	•	•
COOLING SYSTEM						
Compressor Crankcase Heater		**11X27**	•	•	•	•
Compressor Hard Start Kit		**10J42**	•	•		
		12J90			•	•
Compressor Timed-Off Control		**47J27**	•	•	•	•
Low Ambient Kit (40°F)		**21D20**	•	•	•	•
CABINET						
Base Rail Opening Closure Kit		**21J84**	•	•	•	•
Rectangular to Round Duct Adaptor Kits	Downflow - 14 in. dia.	**20X82**	•	•		
	- 14 in. dia.	**21D26**			•	•
	Horizontal - 14 in. dia.	**21J92**	•	•		
	- 14 in. dia.	**21D24**			•	•
	- 16 in. dia.	**22U78**			•	•
	- 18 in. dia.	**22U79**			•	•
ELECTRICAL						
Bottom Power Entry Kit		**21J78**	•	•	•	•
ELECTRIC HEAT						
Electric Heat Size - 208/240V-1ph	5 kW	**10W47**	•	•	•	•
	7.5 kW	**10W48**	•	•	•	•
	10 kW	**10W49**	•	•	•	•
	15 kW	**10W50**		•	•	•
	20 kW	**10W51**			•	•
SINGLE POINT POWER SUPPLY KITS (FOR ELECTRIC HEAT) - SIDE POWER ENTRY ONLY						
Single Point Power Kits	For 5 kW Electric Heat	**13W88**	•	•	•	•
	For 7.5 kW Electric Heat	**13W89**	•	•	•	•
	For 10 kW Electric Heat	**13W90**	•	•	•	•
	For 15-20 kW Electric Heat	**13W91**		•	•	•
INDOOR AIR QUALITY						
[2] Healthy Climate® PCO Accessory		**Y7960**	•	•	•	•
Healthy Climate® PCO Accessory Maintenance Kit (Includes PureAir™ Cartridge and UVA lamp)		**Y7972**	•	•	•	•
[3] Internal Filter Rack Kit (filters not furnished)	(1) 20 x 20 + (1) 14 x 20	**11U73**	•	•		
	(2) 20 x 20	**11U74**			•	•
ROOF CURBS						
Clip Curbs						
	8 in. height	**21J13**	•	•		
		21J17			•	•
	14 in. height	**21J14**	•	•		
		21J19			•	•
	18 in. height	**21J15**	•	•		
		21J20			•	•
	24 in. height	**21J16**	•	•		
		21J25			•	•
Adjustable Pitch Roof Curbs						
Welded Curbs		**22V54**	•	•		
		22V55			•	•
Clip Curbs		**21J26**	•	•		
		21U04			•	•
Strapping Kits for Roof Curbs						
Strapping Kit - Hurricane (Slab Mount)		**21J74**	•	•	•	•
Strapping Kit - Hurricane (Rail Mount)		**22C53**	•	•	•	•
Strapping Kit - Seismic		**21J75**	•	•	•	•

[1] Allows the thermostat to display outdoor temperature.

[2] Filter Rack Kit cannot be used with the Healthy Climate® PCO Accessory. High efficiency filtration between the return air inlet and the PCO accessory is required and must be field supplied.

[3] Filters are not furnished and must be field provided.

ELECTRIC HEAT DATA

		Model No.	LRP16HP24		LRP16HP36		LRP16HP48		LRP16HP60	
		Voltage	208V	240V	208V	240V	208V	240V	208V	240V
[1] Maximum Overcurrent Protection (MOCP)	5 kW	Circuit 1	25	30	30	30	30	30	30	35
	7.5 kW	Circuit 1	40	45	40	45	40	45	45	50
	10 kW	Circuit 1	50	60	50	60	50	60	60	60
	15 kW	Circuit 1	- - -	- - -	50	60	50	60	60	60
		Circuit 2	- - -	- - -	25	30	25	30	25	30
	20 kW	Circuit 1	- - -	- - -	- - -	- - -	50	60	60	60
		Circuit 2	- - -	- - -	- - -	- - -	50	60	50	60
[1] Maximum Overcurrent Protection (MOCP) with Optional Single Point Power Supply	5 kW		45	50	50	60	70	70	70	80
	7.5 kW		60	60	60	70	80	80	80	90
	10 kW		70	80	70	80	80	90	90	100
	15 kW		- - -	- - -	100	110	100	110	110	125
	20 kW		- - -	- - -	- - -	- - -	125	150	150	150
[2] Minimum Circuit Ampacity (MCA)	5 kW	Circuit 1	23.9	27.4	25.4	28.9	26.4	29.9	29.3	32.8
	7.5 kW	Circuit 1	35.2	40.4	36.7	41.9	37.7	42.9	40.6	45.8
	10 kW	Circuit 1	46.5	53.5	48	55	49	56	51.9	58.8
	15 kW	Circuit 1	- - -	- - -	48	55	49	56	51.9	58.8
		Circuit 2	- - -	- - -	22.6	26	22.6	26	22.6	26
	20 kW	Circuit 1	- - -	- - -	- - -	- - -	49	56	51.9	58.8
		Circuit 2	- - -	- - -	- - -	- - -	45.1	52.1	45.1	52.1
[2] Minimum Circuit Ampacity (MCA) with Optional Single Point Power Supply	5 kW		40.5	44	47.2	50.7	54.4	57.8	60.8	64.3
	7.5 kW		51.8	57	58.5	63.7	65.7	70.9	72.1	77.3
	10 kW		63.1	70	69.8	76.8	76.9	83.9	83.4	90.4
	15 kW		- - -	- - -	92.4	102.8	99.5	109.9	106	116.4
	20 kW		- - -	- - -	- - -	- - -	122.1	136	128.6	142.4

NOTE - All units have a minimum Short Circuit Current Rating (SCCR) of 5000 amps.

NOTE - Circuit 1 Minimum Circuit Ampacity includes the Blower Motor Full Load Amps.

NOTE- Extremes of operating range are plus and minus 10% of line voltage.

[1] HACR type breaker or fuse.

[2] Refer to National or Canadian Electrical Code manual to determine wire, fuse and disconnect size requirements.

ELECTRIC HEAT CAPACITIES

Input Voltage	5 kW			7.5 kW			10 kW			15 kW			20 kW		
	No of Steps	kW Input	KBtuh Output	No of Steps	kW Input	KBtuh Output	No of Steps	kW Input	KBtuh Output	No of Steps	kW Input	KBtuh Output	No of Steps	kW Input	KBtuh Output
208	1	3.8	12.8	1	5.6	19.2	1	7.5	25.6	1	11.2	38.2	1	15	51.2
220	1	4.2	14.3	1	6.3	21.5	1	8.4	28.7	1	12.6	43	1	16.8	57.3
230	1	4.6	15.7	1	6.9	23.5	1	9.2	31.3	1	13.8	47	1	18.4	62.7
240	1	5	17.1	1	7.5	25.6	1	10	34.1	1	15	51.2	1	20	68.2

BLOWER DATA

LRP16HP24 Blower Performance

0 through 0.80 in. w.g. External Static Pressure Range

"ADJUST" Jumper Setting	Blower Control Jumper Speed Positions											
	"COOL" Speed - cfm				"HEAT" Speed - cfm				"CONTINUOUS FAN" Speed - cfm			
	A	[1] B	C	D	A	[1] B	C	D	A	B	C	D
+	1100	880	660	440	1150	1035	690	690	550	440	330	220
NORM	1000	800	600	400	1000	900	600	600	500	400	300	200
—	900	720	540	360	1000	900	600	600	450	360	270	180

LRP16HP36 Blower Performance

0 through 0.80 in. w.g. External Static Pressure Range

"ADJUST" Jumper Setting	Blower Control Jumper Speed Positions											
	"COOL" Speed - cfm				"HEAT" Speed - cfm				"CONTINUOUS FAN" Speed - cfm			
	A	[1] B	C	D	A	[1] B	C	D	A	B	C	D
+	1430	1320	1100	880	1495	1380	1150	1150	715	660	550	440
NORM	1300	1200	1000	800	1300	1250	1000	1000	650	600	500	400
—	1170	1080	900	720	1300	1200	1000	1000	585	540	450	360

LRP16HP48 Blower Performance

0 through 0.80 in. w.g. External Static Pressure Range

"ADJUST" Jumper Setting	Blower Control Jumper Speed Positions											
	"COOL" Speed - cfm				"HEAT" Speed - cfm				"CONTINUOUS FAN" Speed - cfm			
	A	[1] B	C	D	A	[1] B	C	D	A	B	C	D
+	1980	1760	1540	1320	2070	1840	1610	1610	990	880	770	660
NORM	1800	1600	1400	1200	1800	1600	1400	1400	900	800	700	600
—	1620	1440	1260	1080	1800	1600	1400	1400	810	720	630	540

LRP16HP60 Blower Performance

0 through 0.80 in. w.g. External Static Pressure Range

"ADJUST" Jumper Setting	Blower Control Jumper Speed Positions											
	"COOL" Speed - cfm				"HEAT" Speed - cfm				"CONTINUOUS FAN" Speed - cfm			
	A	[1] B	C	D	A	[1] B	C	D	A	B	C	D
+	2200	1980	1760	1540	2300	2070	1840	1840	1100	990	880	770
NORM	2000	1800	1600	1400	2000	1800	1600	1600	1000	900	800	700
—	1800	1620	1440	1260	2000	1800	1600	1600	900	810	720	630

[1] Factory Settings.

NOTE - All air data is measured external to unit without air filters.

NOTE - 1st Stage airflow is 70% of 2nd Stage airflow (full capacity) in cooling mode.

ACCESSORY AIR RESISTANCE DATA - in. w.g.

Air Volume cfm	Rectangular to Round Duct Adaptor Kits					
	Downflow		Horizontal			
	14 in. Diameter		14 in. Diameter		16 in. Diameter	18 in. Diameter
	24, 36	48, 60	24, 36	48, 60	48, 60	48, 60
500	0.03	- - -	0.04	- - -	- - -	- - -
600	0.05	- - -	0.07	- - -	- - -	- - -
700	0.08	0.13	0.08	0.13	- - -	- - -
800	0.10	0.17	0.12	0.16	- - -	- - -
900	0.12	0.21	0.15	0.21	- - -	- - -
1000	0.17	0.24	0.19	0.25	0.11	0.03
1100	0.18	0.30	0.23	0.30	0.11	0.03
1200	0.20	0.36	0.29	0.37	0.13	0.03
1300	0.26	0.43	0.31	0.43	0.17	0.03
1400	0.31	0.50	0.39	0.51	0.20	0.03
1500	- - -	0.57	- - -	0.57	0.21	0.05
1600	- - -	0.63	- - -	0.65	0.26	0.05
1700	- - -	0.71	- - -	0.72	0.30	0.06
1800	- - -	0.80	- - -	0.81	0.30	0.06
1900	- - -	0.91	- - -	0.90	0.40	0.06
2000	- - -	0.99	- - -	1.01	0.41	0.06

COOLING RATINGS - 2017

2 TON - LRP16HP24 (1ST STAGE)

Entering Wet Bulb Temperature	Total Air Volume	Outdoor Air Temperature Entering Outdoor Coil																			
		75°F					85°F					95°F					105°F				
		Total Cool Cap.	Comp. Motor Input	Sensible To Total Ratio (S/T) Dry Bulb			Total Cool Cap.	Comp. Motor Input	Sensible To Total Ratio (S/T) Dry Bulb			Total Cool Cap.	Comp. Motor Input	Sensible To Total Ratio (S/T) Dry Bulb			Total Cool Cap.	Comp. Motor Input	Sensible To Total Ratio (S/T) Dry Bulb		
	cfm	kBtuh	kW	75°F	80°F	85°F	kBtuh	kW	75°F	80°F	85°F	kBtuh	kW	75°F	80°F	85°F	kBtuh	kW	75°F	80°F	85°F
63°F	400	15.7	4.6	0.71	0.82	0.94	15.1	4.4	0.71	0.84	0.96	14.2	4.2	0.73	0.86	0.98	13.4	3.9	0.75	0.89	1.00
	550	17.1	5.0	0.77	0.91	1.00	16.3	4.8	0.78	0.93	1.00	15.4	4.5	0.80	0.96	1.00	14.4	4.2	0.83	0.99	1.00
	700	18.0	5.3	0.83	0.99	1.00	17.2	5.0	0.85	1.00	1.00	16.3	4.8	0.88	1.00	1.00	15.4	4.5	0.91	1.00	1.00
67°F	400	16.7	4.9	0.55	0.68	0.79	16.0	4.7	0.57	0.69	0.81	15.1	4.4	0.58	0.70	0.83	14.2	4.2	0.59	0.73	0.85
	550	18.1	5.3	0.59	0.74	0.88	17.3	5.1	0.61	0.76	0.90	16.3	4.8	0.63	0.78	0.93	15.2	4.5	0.64	0.81	0.96
	700	19.0	5.6	0.64	0.81	0.96	18.1	5.3	0.65	0.83	0.99	17.0	5.0	0.67	0.86	1.00	15.9	4.7	0.69	0.89	1.00
71°F	400	17.6	5.2	0.44	0.54	0.65	16.9	5.0	0.44	0.55	0.66	16.0	4.7	0.43	0.56	0.67	15.0	4.4	0.44	0.58	0.70
	550	19.1	5.6	0.45	0.58	0.72	18.2	5.3	0.45	0.59	0.73	17.2	5.0	0.46	0.61	0.76	16.1	4.7	0.46	0.63	0.78
	700	20.0	5.9	0.46	0.62	0.78	19.1	5.6	0.46	0.64	0.81	18.0	5.3	0.48	0.66	0.83	16.8	4.9	0.49	0.68	0.87

NOTE: Values based on 0.50 in. w.c. external static pressure.

2 TON - LRP16HP24 (2ND STAGE)

Entering Wet Bulb Temperature	Total Air Volume	Outdoor Air Temperature Entering Outdoor Coil																			
		85°F					95°F					105°F					115°F				
		Total Cool Cap.	Comp. Motor Input	Sensible To Total Ratio (S/T) Dry Bulb			Total Cool Cap.	Comp. Motor Input	Sensible To Total Ratio (S/T) Dry Bulb			Total Cool Cap.	Comp. Motor Input	Sensible To Total Ratio (S/T) Dry Bulb			Total Cool Cap.	Comp. Motor Input	Sensible To Total Ratio (S/T) Dry Bulb		
	cfm	kBtuh	kW	75°F	80°F	85°F	kBtuh	kW	75°F	80°F	85°F	kBtuh	kW	75°F	80°F	85°F	kBtuh	kW	75°F	80°F	85°F
63°F	600	22.0	6.4	0.73	0.86	0.98	21.0	6.2	0.74	0.88	1.00	19.9	5.8	0.76	0.90	1.00	18.7	5.5	0.78	0.93	1.00
	820	23.6	6.9	0.80	0.95	1.00	22.4	6.6	0.82	0.98	1.00	21.2	6.2	0.84	1.00	1.00	20.0	5.9	0.87	1.00	1.00
	1000	24.6	7.2	0.85	1.00	1.00	23.6	6.9	0.88	1.00	1.00	22.4	6.6	0.91	1.00	1.00	21.0	6.2	0.94	1.00	1.00
67°F	600	23.4	6.9	0.57	0.70	0.83	22.2	6.5	0.59	0.72	0.85	21.0	6.2	0.60	0.74	0.87	19.7	5.8	0.61	0.76	0.90
	820	25.0	7.3	0.62	0.77	0.92	23.6	6.9	0.63	0.80	0.95	22.4	6.6	0.65	0.82	0.98	20.8	6.1	0.67	0.85	1.00
	1000	25.8	7.6	0.65	0.83	0.99	24.4	7.2	0.67	0.86	1.00	23.0	6.7	0.69	0.89	1.00	21.4	6.3	0.71	0.92	1.00
71°F	600	24.6	7.2	0.44	0.56	0.68	23.4	6.9	0.44	0.57	0.69	22.2	6.5	0.45	0.59	0.71	20.8	6.1	0.45	0.60	0.74
	820	26.2	7.7	0.45	0.61	0.75	25.0	7.3	0.46	0.62	0.77	23.6	6.9	0.47	0.64	0.80	22.0	6.4	0.48	0.66	0.83
	1000	27.0	7.9	0.47	0.65	0.81	25.6	7.5	0.48	0.66	0.84	24.2	7.1	0.48	0.68	0.86	22.6	6.6	0.49	0.71	0.90

NOTE: Values based on 0.50 in. w.c. external static pressure.

3 TON - LRP16HP36 (1ST STAGE)

Entering Wet Bulb Temperature	Total Air Volume	Outdoor Air Temperature Entering Outdoor Coil																			
		75°F					85°F					95°F					105°F				
		Total Cool Cap.	Comp. Motor Input	Sensible To Total Ratio (S/T) Dry Bulb			Total Cool Cap.	Comp. Motor Input	Sensible To Total Ratio (S/T) Dry Bulb			Total Cool Cap.	Comp. Motor Input	Sensible To Total Ratio (S/T) Dry Bulb			Total Cool Cap.	Comp. Motor Input	Sensible To Total Ratio (S/T) Dry Bulb		
	cfm	kBtuh	kW	75°F	80°F	85°F	kBtuh	kW	75°F	80°F	85°F	kBtuh	kW	75°F	80°F	85°F	kBtuh	kW	75°F	80°F	85°F
63°F	800	27.8	8.1	0.76	0.90	1.00	26.6	7.8	0.77	0.92	1.00	25.4	7.4	0.79	0.95	1.00	23.8	7.0	0.81	0.98	1.00
	900	28.4	8.3	0.79	0.94	1.00	27.2	8.0	0.80	0.96	1.00	26.0	7.6	0.82	0.99	1.00	24.6	7.2	0.85	1.00	1.00
	1000	29.0	8.5	0.81	0.98	1.00	27.8	8.1	0.83	0.99	1.00	26.6	7.8	0.85	1.00	1.00	25.4	7.4	0.88	1.00	1.00
67°F	800	29.4	8.6	0.60	0.74	0.87	28.2	8.3	0.61	0.75	0.89	26.8	7.9	0.62	0.77	0.91	25.2	7.4	0.63	0.79	0.94
	900	30.0	8.8	0.61	0.76	0.91	28.8	8.4	0.63	0.78	0.93	27.4	8.0	0.64	0.80	0.95	25.8	7.6	0.65	0.82	0.99
	1000	30.6	9.0	0.63	0.79	0.94	29.2	8.6	0.64	0.81	0.97	27.8	8.1	0.66	0.83	0.99	26.2	7.7	0.67	0.86	1.00
71°F	800	30.8	9.0	0.45	0.58	0.71	29.6	8.7	0.46	0.60	0.73	28.2	8.3	0.46	0.61	0.74	26.6	7.8	0.46	0.62	0.77
	900	31.6	9.3	0.45	0.60	0.74	30.2	8.9	0.45	0.61	0.76	28.8	8.4	0.47	0.63	0.78	27.2	8.0	0.47	0.64	0.80
	1000	32.2	9.4	0.46	0.62	0.77	30.8	9.0	0.47	0.63	0.78	29.4	8.6	0.47	0.65	0.81	27.6	8.1	0.49	0.66	0.84

NOTE: Values based on 0.50 in. w.c. external static pressure.

3 TON - LRP16HP36 (2ND STAGE)

Entering Wet Bulb Temperature	Total Air Volume	Outdoor Air Temperature Entering Outdoor Coil																			
		85°F					95°F					105°F					115°F				
		Total Cool Cap.	Comp. Motor Input	Sensible To Total Ratio (S/T) Dry Bulb			Total Cool Cap.	Comp. Motor Input	Sensible To Total Ratio (S/T) Dry Bulb			Total Cool Cap.	Comp. Motor Input	Sensible To Total Ratio (S/T) Dry Bulb			Total Cool Cap.	Comp. Motor Input	Sensible To Total Ratio (S/T) Dry Bulb		
	cfm	kBtuh	kW	75°F	80°F	85°F	kBtuh	kW	75°F	80°F	85°F	kBtuh	kW	75°F	80°F	85°F	kBtuh	kW	75°F	80°F	85°F
63°F	1100	35.2	10.3	0.76	0.91	1.00	33.6	9.8	0.78	0.93	1.00	31.8	9.3	0.80	0.96	1.00	29.8	8.7	0.83	0.99	1.00
	1200	35.8	10.5	0.78	0.93	1.00	34.2	10.0	0.80	0.96	1.00	32.4	9.5	0.82	0.99	1.00	30.4	8.9	0.85	1.00	1.00
	1400	36.8	10.8	0.82	0.98	1.00	35.2	10.3	0.84	1.00	1.00	33.6	9.8	0.87	1.00	1.00	31.6	9.3	0.90	1.00	1.00
67°F	1100	37.2	10.9	0.60	0.74	0.88	35.4	10.4	0.61	0.76	0.90	33.4	9.8	0.62	0.78	0.93	31.2	9.1	0.64	0.81	0.96
	1200	37.8	11.1	0.62	0.76	0.90	36.0	10.6	0.62	0.78	0.93	33.8	9.9	0.64	0.80	0.96	31.6	9.3	0.65	0.83	0.99
	1400	38.5	11.3	0.64	0.80	0.96	36.8	10.8	0.65	0.82	0.98	34.6	10.1	0.67	0.85	1.00	32.4	9.5	0.69	0.88	1.00
71°F	1100	39.0	11.4	0.44	0.59	0.72	37.2	10.9	0.45	0.60	0.73	35.2	10.3	0.45	0.61	0.75	32.8	9.6	0.46	0.63	0.78
	1200	39.5	11.6	0.45	0.60	0.74	37.8	11.1	0.46	0.61	0.76	35.6	10.4	0.46	0.63	0.78	33.4	9.8	0.47	0.64	0.81
	1400	40.5	11.9	0.47	0.63	0.78	38.5	11.3	0.47	0.64	0.80	36.4	10.7	0.48	0.66	0.83	34.0	10.0	0.49	0.68	0.86

NOTE: Values based on 0.50 in. w.c. external static pressure.

4 TON - LRP16HP48 (1ST STAGE)

Entering Wet Bulb Temperature	Total Air Volume	Outdoor Air Temperature Entering Outdoor Coil																			
		75°F					85°F					95°F					105°F				
		Total Cool Cap.	Comp. Motor Input	Sensible To Total Ratio (S/T) Dry Bulb			Total Cool Cap.	Comp. Motor Input	Sensible To Total Ratio (S/T) Dry Bulb			Total Cool Cap.	Comp. Motor Input	Sensible To Total Ratio (S/T) Dry Bulb			Total Cool Cap.	Comp. Motor Input	Sensible To Total Ratio (S/T) Dry Bulb		
	cfm	kBtuh	kW	75°F	80°F	85°F	kBtuh	kW	75°F	80°F	85°F	kBtuh	kW	75°F	80°F	85°F	kBtuh	kW	75°F	80°F	85°F
63°F	900	34.8	10.2	0.73	0.86	0.97	33.2	9.7	0.74	0.88	0.99	31.4	9.2	0.76	0.90	1.00	29.2	8.6	0.78	0.93	1.00
	1110	36.6	10.7	0.77	0.92	1.00	35.0	10.3	0.79	0.94	1.00	33.0	9.7	0.81	0.97	1.00	30.8	9.0	0.84	0.99	1.00
	1200	37.4	11.0	0.79	0.94	1.00	35.6	10.4	0.81	0.97	1.00	33.6	9.8	0.83	0.99	1.00	31.6	9.3	0.86	1.00	1.00
67°F	900	37.2	10.9	0.58	0.70	0.82	35.4	10.4	0.59	0.72	0.84	33.4	9.8	0.60	0.73	0.87	31.2	9.1	0.61	0.76	0.90
	1110	39.0	11.4	0.61	0.75	0.88	37.2	10.9	0.62	0.77	0.91	35.2	10.3	0.63	0.79	0.94	32.6	9.6	0.64	0.81	0.97
	1200	40.0	11.7	0.62	0.77	0.91	37.8	11.1	0.63	0.79	0.93	35.6	10.4	0.64	0.81	0.96	33.2	9.7	0.66	0.84	0.99
71°F	900	39.5	11.6	0.44	0.56	0.68	37.6	11.0	0.44	0.57	0.69	35.6	10.4	0.45	0.58	0.71	33.2	9.7	0.45	0.59	0.73
	1110	41.5	12.2	0.45	0.59	0.72	39.5	11.6	0.45	0.60	0.74	37.4	11.0	0.46	0.61	0.76	34.8	10.2	0.46	0.63	0.79
	1200	42.0	12.3	0.45	0.60	0.74	40.0	11.7	0.46	0.61	0.76	38.0	11.1	0.46	0.63	0.78	35.4	10.4	0.47	0.65	0.81

NOTE: Values based on 0.50 in. w.c. external static pressure.

4 TON - LRP16HP48 (2ND STAGE)

Entering Wet Bulb Temperature	Total Air Volume	Outdoor Air Temperature Entering Outdoor Coil																			
		85°F					95°F					105°F					115°F				
		Total Cool Cap.	Comp. Motor Input	Sensible To Total Ratio (S/T) Dry Bulb			Total Cool Cap.	Comp. Motor Input	Sensible To Total Ratio (S/T) Dry Bulb			Total Cool Cap.	Comp. Motor Input	Sensible To Total Ratio (S/T) Dry Bulb			Total Cool Cap.	Comp. Motor Input	Sensible To Total Ratio (S/T) Dry Bulb		
	cfm	kBtuh	kW	75°F	80°F	85°F	kBtuh	kW	75°F	80°F	85°F	kBtuh	kW	75°F	80°F	85°F	kBtuh	kW	75°F	80°F	85°F
63°F	1400	46.0	13.5	0.76	0.90	1.00	43.5	12.7	0.77	0.92	1.00	41.0	12.0	0.79	0.95	1.00	38.5	11.3	0.82	0.98	1.00
	1600	47.5	13.9	0.79	0.94	1.00	45.0	13.2	0.81	0.96	1.00	42.5	12.5	0.83	0.99	1.00	40.0	11.7	0.86	1.00	1.00
	1750	48.0	14.1	0.81	0.97	1.00	45.5	13.3	0.83	0.99	1.00	43.5	12.7	0.86	1.00	1.00	41.0	12.0	0.89	1.00	1.00
67°F	1400	48.5	14.2	0.60	0.73	0.87	46.5	13.6	0.61	0.75	0.89	43.5	12.7	0.62	0.77	0.92	41.0	12.0	0.63	0.80	0.95
	1600	50.0	14.7	0.62	0.77	0.91	47.5	13.9	0.63	0.78	0.93	44.5	13.0	0.64	0.81	0.96	41.5	12.2	0.66	0.84	0.99
	1750	51.0	14.9	0.63	0.79	0.94	48.0	14.1	0.64	0.81	0.97	45.5	13.3	0.66	0.84	0.99	42.0	12.3	0.68	0.87	1.00
71°F	1400	51.5	15.1	0.45	0.58	0.71	49.0	14.4	0.45	0.59	0.73	46.0	13.5	0.46	0.61	0.75	43.0	12.6	0.46	0.62	0.78
	1600	52.5	15.4	0.45	0.60	0.74	50.0	14.7	0.46	0.62	0.76	47.0	13.8	0.47	0.63	0.79	44.0	12.9	0.48	0.65	0.82
	1750	53.5	15.7	0.46	0.62	0.77	51.0	14.9	0.46	0.63	0.79	47.5	13.9	0.48	0.65	0.82	44.5	13.0	0.48	0.67	0.85

NOTE: Values based on 0.50 in. w.c. external static pressure.

5 TON - LRP16HP60 (1ST STAGE)

Entering Wet Bulb Temperature	Total Air Volume	Outdoor Air Temperature Entering Outdoor Coil																			
		75°F					85°F					95°F					105°F				
		Total Cool Cap.	Comp. Motor Input	Sensible To Total Ratio (S/T) Dry Bulb			Total Cool Cap.	Comp. Motor Input	Sensible To Total Ratio (S/T) Dry Bulb			Total Cool Cap.	Comp. Motor Input	Sensible To Total Ratio (S/T) Dry Bulb			Total Cool Cap.	Comp. Motor Input	Sensible To Total Ratio (S/T) Dry Bulb		
	cfm	kBtuh	kW	75°F	80°F	85°F	kBtuh	kW	75°F	80°F	85°F	kBtuh	kW	75°F	80°F	85°F	kBtuh	kW	75°F	80°F	85°F
63°F	1030	43.0	12.6	0.72	0.84	0.96	40.5	11.9	0.73	0.86	0.98	38.0	11.1	0.75	0.89	1.00	35.4	10.4	0.77	0.92	1.00
	1200	44.5	13.0	0.75	0.88	1.00	42.0	12.3	0.76	0.90	1.00	39.5	11.6	0.78	0.94	1.00	36.8	10.8	0.81	0.97	1.00
	1340	45.5	13.3	0.77	0.91	1.00	43.5	12.7	0.79	0.94	1.00	40.5	11.9	0.81	0.97	1.00	37.6	11.0	0.84	1.00	1.00
67°F	1030	45.5	13.3	0.57	0.69	0.81	43.5	12.7	0.58	0.71	0.83	40.5	11.9	0.59	0.72	0.85	37.8	11.1	0.60	0.75	0.89
	1200	47.5	13.9	0.59	0.72	0.85	45.0	13.2	0.60	0.74	0.87	42.0	12.3	0.61	0.76	0.90	39.0	11.4	0.63	0.79	0.94
	1340	48.5	14.2	0.61	0.74	0.88	46.0	13.5	0.62	0.77	0.91	43.0	12.6	0.63	0.79	0.94	40.0	11.7	0.65	0.82	0.98
71°F	1030	48.5	14.2	0.43	0.55	0.67	46.0	13.5	0.44	0.56	0.68	43.0	12.6	0.44	0.57	0.70	40.0	11.7	0.44	0.59	0.72
	1200	50.0	14.7	0.44	0.57	0.70	47.5	13.9	0.45	0.59	0.72	44.5	13.0	0.45	0.60	0.74	41.5	12.2	0.45	0.61	0.76
	1340	51.5	15.1	0.45	0.59	0.72	48.5	14.2	0.46	0.60	0.74	45.5	13.3	0.46	0.62	0.77	42.5	12.5	0.46	0.64	0.79

NOTE: Values based on 0.50 in. w.c. external static pressure.

5 TON - LRP16HP60 (2ND STAGE)

Entering Wet Bulb Temperature	Total Air Volume	Outdoor Air Temperature Entering Outdoor Coil																			
		85°F					95°F					105°F					115°F				
		Total Cool Cap.	Comp. Motor Input	Sensible To Total Ratio (S/T) Dry Bulb			Total Cool Cap.	Comp. Motor Input	Sensible To Total Ratio (S/T) Dry Bulb			Total Cool Cap.	Comp. Motor Input	Sensible To Total Ratio (S/T) Dry Bulb			Total Cool Cap.	Comp. Motor Input	Sensible To Total Ratio (S/T) Dry Bulb		
	cfm	kBtuh	kW	75°F	80°F	85°F	kBtuh	kW	75°F	80°F	85°F	kBtuh	kW	75°F	80°F	85°F	kBtuh	kW	75°F	80°F	85°F
63°F	1600	56.5	16.6	0.74	0.88	0.99	54.0	15.8	0.76	0.90	1.00	51.0	14.9	0.78	0.93	1.00	47.5	13.9	0.80	0.95	1.00
	1800	58.0	17.0	0.77	0.92	1.00	55.0	16.1	0.78	0.94	1.00	52.0	15.2	0.80	0.96	1.00	49.0	14.4	0.83	0.99	1.00
	2000	59.0	17.3	0.79	0.95	1.00	56.5	16.6	0.81	0.97	1.00	53.5	15.7	0.84	0.99	1.00	50.0	14.7	0.87	1.00	1.00
67°F	1600	59.5	17.4	0.59	0.72	0.85	57.0	16.7	0.60	0.74	0.87	54.0	15.8	0.61	0.75	0.89	50.5	14.8	0.62	0.78	0.93
	1800	61.0	17.9	0.60	0.75	0.88	58.5	17.1	0.61	0.76	0.91	55.0	16.1	0.63	0.78	0.93	51.5	15.1	0.65	0.81	0.97
	2000	62.5	18.3	0.62	0.77	0.92	59.5	17.4	0.63	0.79	0.94	56.0	16.4	0.64	0.82	0.97	52.5	15.4	0.67	0.85	0.99
71°F	1600	63.0	18.5	0.44	0.58	0.70	60.0	17.6	0.44	0.58	0.71	57.0	16.7	0.44	0.59	0.73	53.0	15.5	0.46	0.61	0.75
	1800	64.5	18.9	0.45	0.59	0.72	61.5	18.0	0.45	0.60	0.74	58.0	17.0	0.45	0.61	0.76	54.5	16.0	0.46	0.64	0.79
	2000	66.0	19.3	0.45	0.61	0.75	62.5	18.3	0.46	0.62	0.77	59.0	17.3	0.46	0.63	0.80	55.0	16.1	0.48	0.66	0.83

NOTE: Values based on 0.50 in. w.c. external static pressure.

COOLING RATINGS - 2023

2 TON - LRP16HP24 (1ST STAGE)

Entering Wet Bulb Temperature	Total Air Volume	Outdoor Air Temperature Entering Outdoor Coil																			
		75°F					85°F					95°F					105°F				
		Total Cool Cap.	Comp. Motor Input	Sensible To Total Ratio (S/T) Dry Bulb			Total Cool Cap.	Comp. Motor Input	Sensible To Total Ratio (S/T) Dry Bulb			Total Cool Cap.	Comp. Motor Input	Sensible To Total Ratio (S/T) Dry Bulb			Total Cool Cap.	Comp. Motor Input	Sensible To Total Ratio (S/T) Dry Bulb		
	cfm	kBtuh	kW	75°F	80°F	85°F	kBtuh	kW	75°F	80°F	85°F	kBtuh	kW	75°F	80°F	85°F	kBtuh	kW	75°F	80°F	85°F
63°F	400	15.7	4.6	0.71	0.82	0.94	15.1	4.4	0.71	0.84	0.96	14.2	4.2	0.73	0.86	0.98	13.4	3.9	0.75	0.89	1.00
	550	17.1	5.0	0.77	0.91	1.00	16.3	4.8	0.78	0.93	1.00	15.4	4.5	0.80	0.96	1.00	14.4	4.2	0.83	0.99	1.00
	700	18.0	5.3	0.83	0.99	1.00	17.2	5.0	0.85	1.00	1.00	16.3	4.8	0.88	1.00	1.00	15.4	4.5	0.91	1.00	1.00
67°F	400	16.7	4.9	0.55	0.68	0.79	16.0	4.7	0.57	0.69	0.81	15.1	4.4	0.58	0.70	0.83	14.2	4.2	0.59	0.73	0.85
	550	18.1	5.3	0.59	0.74	0.88	17.3	5.1	0.61	0.76	0.90	16.3	4.8	0.63	0.78	0.93	15.2	4.5	0.64	0.81	0.96
	700	19.0	5.6	0.64	0.81	0.96	18.1	5.3	0.65	0.83	0.99	17.0	5.0	0.67	0.86	1.00	15.9	4.7	0.69	0.89	1.00
71°F	400	17.6	5.2	0.44	0.54	0.65	16.9	5.0	0.44	0.55	0.66	16.0	4.7	0.43	0.56	0.67	15.0	4.4	0.44	0.58	0.70
	550	19.1	5.6	0.45	0.58	0.72	18.2	5.3	0.45	0.59	0.73	17.2	5.0	0.46	0.61	0.76	16.1	4.7	0.46	0.63	0.78
	700	20.0	5.9	0.46	0.62	0.78	19.1	5.6	0.46	0.64	0.81	18.0	5.3	0.48	0.66	0.83	16.8	4.9	0.49	0.68	0.87

NOTE: Values based on 0.58 in. w.c. external static pressure.

2 TON - LRP16HP24 (2ND STAGE)

Entering Wet Bulb Temperature	Total Air Volume	Outdoor Air Temperature Entering Outdoor Coil																			
		85°F					95°F					105°F					115°F				
		Total Cool Cap.	Comp. Motor Input	Sensible To Total Ratio (S/T) Dry Bulb			Total Cool Cap.	Comp. Motor Input	Sensible To Total Ratio (S/T) Dry Bulb			Total Cool Cap.	Comp. Motor Input	Sensible To Total Ratio (S/T) Dry Bulb			Total Cool Cap.	Comp. Motor Input	Sensible To Total Ratio (S/T) Dry Bulb		
	cfm	kBtuh	kW	75°F	80°F	85°F	kBtuh	kW	75°F	80°F	85°F	kBtuh	kW	75°F	80°F	85°F	kBtuh	kW	75°F	80°F	85°F
63°F	600	22.0	6.4	0.73	0.86	0.98	21.0	6.2	0.74	0.88	1.00	19.9	5.8	0.76	0.90	1.00	18.7	5.5	0.78	0.93	1.00
	820	23.6	6.9	0.80	0.95	1.00	22.4	6.6	0.82	0.98	1.00	21.2	6.2	0.84	1.00	1.00	20.0	5.9	0.87	1.00	1.00
	1000	24.6	7.2	0.85	1.00	1.00	23.6	6.9	0.88	1.00	1.00	22.4	6.6	0.91	1.00	1.00	21.0	6.2	0.94	1.00	1.00
67°F	600	23.4	6.9	0.57	0.70	0.83	22.2	6.5	0.59	0.72	0.85	21.0	6.2	0.60	0.74	0.87	19.7	5.8	0.61	0.76	0.90
	820	25.0	7.3	0.62	0.77	0.92	23.6	6.9	0.63	0.80	0.95	22.4	6.6	0.65	0.82	0.98	20.8	6.1	0.67	0.85	1.00
	1000	25.8	7.6	0.65	0.83	0.99	24.4	7.2	0.67	0.86	1.00	23.0	6.7	0.69	0.89	1.00	21.4	6.3	0.71	0.92	1.00
71°F	600	24.6	7.2	0.44	0.56	0.68	23.4	6.9	0.44	0.57	0.69	22.2	6.5	0.45	0.59	0.71	20.8	6.1	0.45	0.60	0.74
	820	26.2	7.7	0.45	0.61	0.75	25.0	7.3	0.46	0.62	0.77	23.6	6.9	0.47	0.64	0.80	22.0	6.4	0.48	0.66	0.83
	1000	27.0	7.9	0.47	0.65	0.81	25.6	7.5	0.48	0.66	0.84	24.2	7.1	0.48	0.68	0.86	22.6	6.6	0.49	0.71	0.90

NOTE: Values based on 0.58 in. w.c. external static pressure.

3 TON - LRP16HP36 (1ST STAGE)

Entering Wet Bulb Temperature	Total Air Volume	Outdoor Air Temperature Entering Outdoor Coil																			
		75°F					85°F					95°F					105°F				
		Total Cool Cap.	Comp. Motor Input	Sensible To Total Ratio (S/T) Dry Bulb			Total Cool Cap.	Comp. Motor Input	Sensible To Total Ratio (S/T) Dry Bulb			Total Cool Cap.	Comp. Motor Input	Sensible To Total Ratio (S/T) Dry Bulb			Total Cool Cap.	Comp. Motor Input	Sensible To Total Ratio (S/T) Dry Bulb		
	cfm	kBtuh	kW	75°F	80°F	85°F	kBtuh	kW	75°F	80°F	85°F	kBtuh	kW	75°F	80°F	85°F	kBtuh	kW	75°F	80°F	85°F
63°F	800	27.8	8.1	0.76	0.90	1.00	26.6	7.8	0.77	0.92	1.00	25.4	7.4	0.79	0.95	1.00	23.8	7.0	0.81	0.98	1.00
	900	28.4	8.3	0.79	0.94	1.00	27.2	8.0	0.80	0.96	1.00	26.0	7.6	0.82	0.99	1.00	24.6	7.2	0.85	1.00	1.00
	1000	29.0	8.5	0.81	0.98	1.00	27.8	8.1	0.83	0.99	1.00	26.6	7.8	0.85	1.00	1.00	25.4	7.4	0.88	1.00	1.00
67°F	800	29.4	8.6	0.60	0.74	0.87	28.2	8.3	0.61	0.75	0.89	26.8	7.9	0.62	0.77	0.91	25.2	7.4	0.63	0.79	0.94
	900	30.0	8.8	0.61	0.76	0.91	28.8	8.4	0.63	0.78	0.93	27.4	8.0	0.64	0.80	0.95	25.8	7.6	0.65	0.82	0.99
	1000	30.6	9.0	0.63	0.79	0.94	29.2	8.6	0.64	0.81	0.97	27.8	8.1	0.66	0.83	0.99	26.2	7.7	0.67	0.86	1.00
71°F	800	30.8	9.0	0.45	0.58	0.71	29.6	8.7	0.46	0.60	0.73	28.2	8.3	0.46	0.61	0.74	26.6	7.8	0.46	0.62	0.77
	900	31.6	9.3	0.45	0.60	0.74	30.2	8.9	0.45	0.61	0.76	28.8	8.4	0.47	0.63	0.78	27.2	8.0	0.47	0.64	0.80
	1000	32.2	9.4	0.46	0.62	0.77	30.8	9.0	0.47	0.63	0.78	29.4	8.6	0.47	0.65	0.81	27.6	8.1	0.49	0.66	0.84

NOTE: Values based on 0.58 in. w.c. external static pressure.

3 TON - LRP16HP36 (2ND STAGE)

Entering Wet Bulb Temperature	Total Air Volume	Outdoor Air Temperature Entering Outdoor Coil																			
		85°F					95°F					105°F					115°F				
		Total Cool Cap.	Comp. Motor Input	Sensible To Total Ratio (S/T) Dry Bulb			Total Cool Cap.	Comp. Motor Input	Sensible To Total Ratio (S/T) Dry Bulb			Total Cool Cap.	Comp. Motor Input	Sensible To Total Ratio (S/T) Dry Bulb			Total Cool Cap.	Comp. Motor Input	Sensible To Total Ratio (S/T) Dry Bulb		
	cfm	kBtuh	kW	75°F	80°F	85°F	kBtuh	kW	75°F	80°F	85°F	kBtuh	kW	75°F	80°F	85°F	kBtuh	kW	75°F	80°F	85°F
63°F	1100	35.2	10.3	0.76	0.91	1.00	33.6	9.8	0.78	0.93	1.00	31.8	9.3	0.80	0.96	1.00	29.8	8.7	0.83	0.99	1.00
	1200	35.8	10.5	0.78	0.93	1.00	34.2	10.0	0.80	0.96	1.00	32.4	9.5	0.82	0.99	1.00	30.4	8.9	0.85	1.00	1.00
	1400	36.8	10.8	0.82	0.98	1.00	35.2	10.3	0.84	1.00	1.00	33.6	9.8	0.87	1.00	1.00	31.6	9.3	0.90	1.00	1.00
67°F	1100	37.2	10.9	0.60	0.74	0.88	35.4	10.4	0.61	0.76	0.90	33.4	9.8	0.62	0.78	0.93	31.2	9.1	0.64	0.81	0.96
	1200	37.8	11.1	0.62	0.76	0.90	36.0	10.6	0.62	0.78	0.93	33.8	9.9	0.64	0.80	0.96	31.6	9.3	0.65	0.83	0.99
	1400	38.5	11.3	0.64	0.80	0.96	36.8	10.8	0.65	0.82	0.98	34.6	10.1	0.67	0.85	1.00	32.4	9.5	0.69	0.88	1.00
71°F	1100	39.0	11.4	0.44	0.59	0.72	37.2	10.9	0.45	0.60	0.73	35.2	10.3	0.45	0.61	0.75	32.8	9.6	0.46	0.63	0.78
	1200	39.5	11.6	0.45	0.60	0.74	37.8	11.1	0.46	0.61	0.76	35.6	10.4	0.46	0.63	0.78	33.4	9.8	0.47	0.64	0.81
	1400	40.5	11.9	0.47	0.63	0.78	38.5	11.3	0.47	0.64	0.80	36.4	10.7	0.48	0.66	0.83	34.0	10.0	0.49	0.68	0.86

NOTE: Values based on 0.58 in. w.c. external static pressure.

4 TON - LRP16HP48 (1ST STAGE)

Entering Wet Bulb Temperature	Total Air Volume	Outdoor Air Temperature Entering Outdoor Coil																			
		75°F					85°F					95°F					105°F				
		Total Cool Cap.	Comp. Motor Input	Sensible To Total Ratio (S/T) Dry Bulb			Total Cool Cap.	Comp. Motor Input	Sensible To Total Ratio (S/T) Dry Bulb			Total Cool Cap.	Comp. Motor Input	Sensible To Total Ratio (S/T) Dry Bulb			Total Cool Cap.	Comp. Motor Input	Sensible To Total Ratio (S/T) Dry Bulb		
	cfm	kBtuh	kW	75°F	80°F	85°F	kBtuh	kW	75°F	80°F	85°F	kBtuh	kW	75°F	80°F	85°F	kBtuh	kW	75°F	80°F	85°F
63°F	900	34.8	10.2	0.73	0.86	0.97	33.2	9.7	0.74	0.88	0.99	31.4	9.2	0.76	0.90	1.00	29.2	8.6	0.78	0.93	1.00
	1110	36.6	10.7	0.77	0.92	1.00	35.0	10.3	0.79	0.94	1.00	33.0	9.7	0.81	0.97	1.00	30.8	9.0	0.84	0.99	1.00
	1200	37.4	11.0	0.79	0.94	1.00	35.6	10.4	0.81	0.97	1.00	33.6	9.8	0.83	0.99	1.00	31.6	9.3	0.86	1.00	1.00
67°F	900	37.2	10.9	0.58	0.70	0.82	35.4	10.4	0.59	0.72	0.84	33.4	9.8	0.60	0.73	0.87	31.2	9.1	0.61	0.76	0.90
	1110	39.0	11.4	0.61	0.75	0.88	37.2	10.9	0.62	0.77	0.91	35.2	10.3	0.63	0.79	0.94	32.6	9.6	0.64	0.81	0.97
	1200	40.0	11.7	0.62	0.77	0.91	37.8	11.1	0.63	0.79	0.93	35.6	10.4	0.64	0.81	0.96	33.2	9.7	0.66	0.84	0.99
71°F	900	39.5	11.6	0.44	0.56	0.68	37.6	11.0	0.44	0.57	0.69	35.6	10.4	0.45	0.58	0.71	33.2	9.7	0.45	0.59	0.73
	1110	41.5	12.2	0.45	0.59	0.72	39.5	11.6	0.45	0.60	0.74	37.4	11.0	0.46	0.61	0.76	34.8	10.2	0.46	0.63	0.79
	1200	42.0	12.3	0.45	0.60	0.74	40.0	11.7	0.46	0.61	0.76	38.0	11.1	0.46	0.63	0.78	35.4	10.4	0.47	0.65	0.81

NOTE: Values based on 0.58 in. w.c. external static pressure.

4 TON - LRP16HP48 (2ND STAGE)

Entering Wet Bulb Temperature	Total Air Volume	Outdoor Air Temperature Entering Outdoor Coil																			
		85°F					95°F					105°F					115°F				
		Total Cool Cap.	Comp. Motor Input	Sensible To Total Ratio (S/T) Dry Bulb			Total Cool Cap.	Comp. Motor Input	Sensible To Total Ratio (S/T) Dry Bulb			Total Cool Cap.	Comp. Motor Input	Sensible To Total Ratio (S/T) Dry Bulb			Total Cool Cap.	Comp. Motor Input	Sensible To Total Ratio (S/T) Dry Bulb		
	cfm	kBtuh	kW	75°F	80°F	85°F	kBtuh	kW	75°F	80°F	85°F	kBtuh	kW	75°F	80°F	85°F	kBtuh	kW	75°F	80°F	85°F
63°F	1400	46.0	13.5	0.76	0.90	1.00	43.5	12.7	0.77	0.92	1.00	41.0	12.0	0.79	0.95	1.00	38.5	11.3	0.82	0.98	1.00
	1600	47.5	13.9	0.79	0.94	1.00	45.0	13.2	0.81	0.96	1.00	42.5	12.5	0.83	0.99	1.00	40.0	11.7	0.86	1.00	1.00
	1750	48.0	14.1	0.81	0.97	1.00	45.5	13.3	0.83	0.99	1.00	43.5	12.7	0.86	1.00	1.00	41.0	12.0	0.89	1.00	1.00
67°F	1400	48.5	14.2	0.60	0.73	0.87	46.5	13.6	0.61	0.75	0.89	43.5	12.7	0.62	0.77	0.92	41.0	12.0	0.63	0.80	0.95
	1600	50.0	14.7	0.62	0.77	0.91	47.5	13.9	0.63	0.78	0.93	44.5	13.0	0.64	0.81	0.96	41.5	12.2	0.66	0.84	0.99
	1750	51.0	14.9	0.63	0.79	0.94	48.0	14.1	0.64	0.81	0.97	45.5	13.3	0.66	0.84	0.99	42.0	12.3	0.68	0.87	1.00
71°F	1400	51.5	15.1	0.45	0.58	0.71	49.0	14.4	0.45	0.59	0.73	46.0	13.5	0.46	0.61	0.75	43.0	12.6	0.46	0.62	0.78
	1600	52.5	15.4	0.45	0.60	0.74	50.0	14.7	0.46	0.62	0.76	47.0	13.8	0.47	0.63	0.79	44.0	12.9	0.48	0.65	0.82
	1750	53.5	15.7	0.46	0.62	0.77	51.0	14.9	0.46	0.63	0.79	47.5	13.9	0.48	0.65	0.82	44.5	13.0	0.48	0.67	0.85

NOTE: Values based on 0.58 in. w.c. external static pressure.

5 TON - LRP16HP60 (1ST STAGE)

Entering Wet Bulb Temperature	Total Air Volume	Outdoor Air Temperature Entering Outdoor Coil																			
		75°F					85°F					95°F					105°F				
		Total Cool Cap.	Comp. Motor Input	Sensible To Total Ratio (S/T) Dry Bulb			Total Cool Cap.	Comp. Motor Input	Sensible To Total Ratio (S/T) Dry Bulb			Total Cool Cap.	Comp. Motor Input	Sensible To Total Ratio (S/T) Dry Bulb			Total Cool Cap.	Comp. Motor Input	Sensible To Total Ratio (S/T) Dry Bulb		
	cfm	kBtuh	kW	75°F	80°F	85°F	kBtuh	kW	75°F	80°F	85°F	kBtuh	kW	75°F	80°F	85°F	kBtuh	kW	75°F	80°F	85°F
63°F	1030	43.0	12.6	0.72	0.84	0.96	40.5	11.9	0.73	0.86	0.98	38.0	11.1	0.75	0.89	1.00	35.4	10.4	0.77	0.92	1.00
	1200	44.5	13.0	0.75	0.88	1.00	42.0	12.3	0.76	0.90	1.00	39.5	11.6	0.78	0.94	1.00	36.8	10.8	0.81	0.97	1.00
	1340	45.5	13.3	0.77	0.91	1.00	43.5	12.7	0.79	0.94	1.00	40.5	11.9	0.81	0.97	1.00	37.6	11.0	0.84	1.00	1.00
67°F	1030	45.5	13.3	0.57	0.69	0.81	43.5	12.7	0.58	0.71	0.83	40.5	11.9	0.59	0.72	0.85	37.8	11.1	0.60	0.75	0.89
	1200	47.5	13.9	0.59	0.72	0.85	45.0	13.2	0.60	0.74	0.87	42.0	12.3	0.61	0.76	0.90	39.0	11.4	0.63	0.79	0.94
	1340	48.5	14.2	0.61	0.74	0.88	46.0	13.5	0.62	0.77	0.91	43.0	12.6	0.63	0.79	0.94	40.0	11.7	0.65	0.82	0.98
71°F	1030	48.5	14.2	0.43	0.55	0.67	46.0	13.5	0.44	0.56	0.68	43.0	12.6	0.44	0.57	0.70	40.0	11.7	0.44	0.59	0.72
	1200	50.0	14.7	0.44	0.57	0.70	47.5	13.9	0.45	0.59	0.72	44.5	13.0	0.45	0.60	0.74	41.5	12.2	0.45	0.61	0.76
	1340	51.5	15.1	0.45	0.59	0.72	48.5	14.2	0.46	0.60	0.74	45.5	13.3	0.46	0.62	0.77	42.5	12.5	0.46	0.64	0.79

NOTE: Values based on 0.58 in. w.c. external static pressure.

5 TON - LRP16HP60 (2ND STAGE)

Entering Wet Bulb Temperature	Total Air Volume	Outdoor Air Temperature Entering Outdoor Coil																			
		85°F					95°F					105°F					115°F				
		Total Cool Cap.	Comp. Motor Input	Sensible To Total Ratio (S/T) Dry Bulb			Total Cool Cap.	Comp. Motor Input	Sensible To Total Ratio (S/T) Dry Bulb			Total Cool Cap.	Comp. Motor Input	Sensible To Total Ratio (S/T) Dry Bulb			Total Cool Cap.	Comp. Motor Input	Sensible To Total Ratio (S/T) Dry Bulb		
	cfm	kBtuh	kW	75°F	80°F	85°F	kBtuh	kW	75°F	80°F	85°F	kBtuh	kW	75°F	80°F	85°F	kBtuh	kW	75°F	80°F	85°F
63°F	1600	56.5	16.6	0.74	0.88	0.99	54.0	15.8	0.76	0.90	1.00	51.0	14.9	0.78	0.93	1.00	47.5	13.9	0.80	0.95	1.00
	1800	58.0	17.0	0.77	0.92	1.00	55.0	16.1	0.78	0.94	1.00	52.0	15.2	0.80	0.96	1.00	49.0	14.4	0.83	0.99	1.00
	2000	59.0	17.3	0.79	0.95	1.00	56.5	16.6	0.81	0.97	1.00	53.5	15.7	0.84	0.99	1.00	50.0	14.7	0.87	1.00	1.00
67°F	1600	59.5	17.4	0.59	0.72	0.85	57.0	16.7	0.60	0.74	0.87	54.0	15.8	0.61	0.75	0.89	50.5	14.8	0.62	0.78	0.93
	1800	61.0	17.9	0.60	0.75	0.88	58.5	17.1	0.61	0.76	0.91	55.0	16.1	0.63	0.78	0.93	51.5	15.1	0.65	0.81	0.97
	2000	62.5	18.3	0.62	0.77	0.92	59.5	17.4	0.63	0.79	0.94	56.0	16.4	0.64	0.82	0.97	52.5	15.4	0.67	0.85	0.99
71°F	1600	63.0	18.5	0.44	0.58	0.70	60.0	17.6	0.44	0.58	0.71	57.0	16.7	0.44	0.59	0.73	53.0	15.5	0.46	0.61	0.75
	1800	64.5	18.9	0.45	0.59	0.72	61.5	18.0	0.45	0.60	0.74	58.0	17.0	0.45	0.61	0.76	54.5	16.0	0.46	0.64	0.79
	2000	66.0	19.3	0.45	0.61	0.75	62.5	18.3	0.46	0.62	0.77	59.0	17.3	0.46	0.63	0.80	55.0	16.1	0.48	0.66	0.83

NOTE: Values based on 0.58 in. w.c. external static pressure.

HEATING RATINGS

Model	Outdoor Temp - DB/WB ºF									
	0/0		17/15		35/33		47/43		62/56	
	Btuh	kW	Btuh	kW	Btuh	kW	Btuh	kW	Btuh	kW
LRP16HP24	9,300	1.60	11,900	1.67	17,700	1.76	21,400	1.82	26,400	1.89
LRP16HP36	14,400	2.46	18,500	2.61	27,500	2.82	33,200	2.96	40,900	3.13
LRP16HP48	19,800	3.43	24,700	3.49	37,700	3.76	46,000	3.94	57,200	4.16
LRP16HP60	26,900	4.12	35,500	4.33	50,800	4.76	58,000	5.04	73,600	5.40

FIELD WIRING

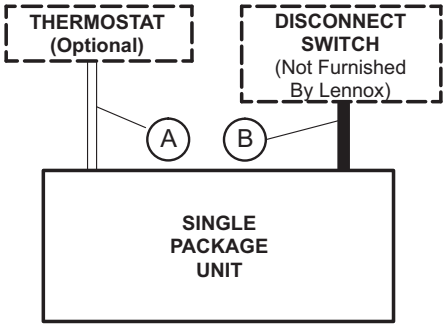

A − Seven Wire Low Voltage (Electronic)
B − Two Wire Power (See Electrical Data Table)

If multiple disconnects are used on units with electric heat; there must be two−wire power provided for each disconnect

− Field Wiring Not Furnished −

INSTALLATION CLEARANCES

	in.	mm
Front	24	610
Right Side (blower access)	24	610
Left Side (evaporator coil access)	24	610
Back	0	0
Top	48	1219

DIMENSIONS UNIT

Size	CORNER WEIGHTS								CENTER OF GRAVITY			
	AA		BB		CC		DD		EE		FF	
	lbs.	kg	lbs.	kg	lbs.	kg	lbs.	kg	in.	mm	in.	mm
24	96	44	107	49	117	53	105	48	21	533	21-1/2	546
36	104	47	116	53	126	57	114	52	21	533	21-1/2	546
48	124	56	134	61	147	67	135	61	25-1/4	641	21-1/2	546
60	127	58	138	63	151	68	139	63	25-1/4	641	21-1/2	546

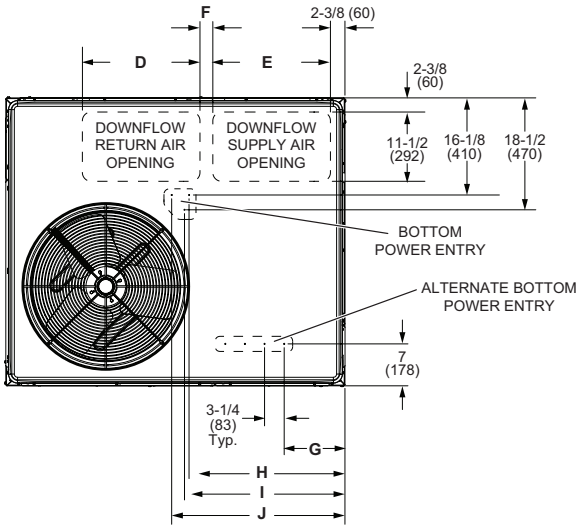

TOP VIEW (Base)

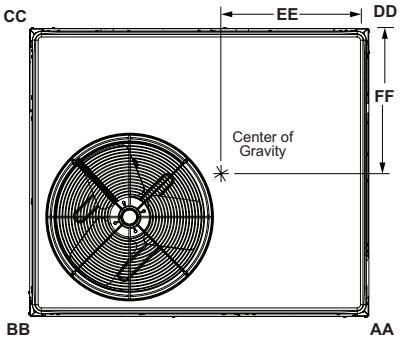

TOP VIEW
(Corner Weight and Center of Gravity)

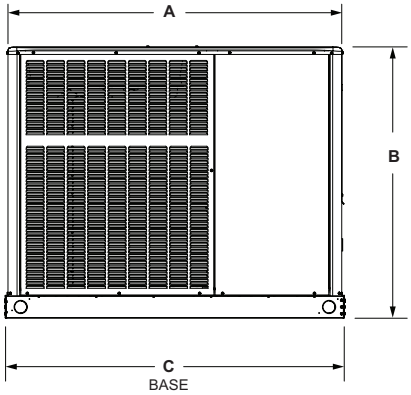

FRONT VIEW

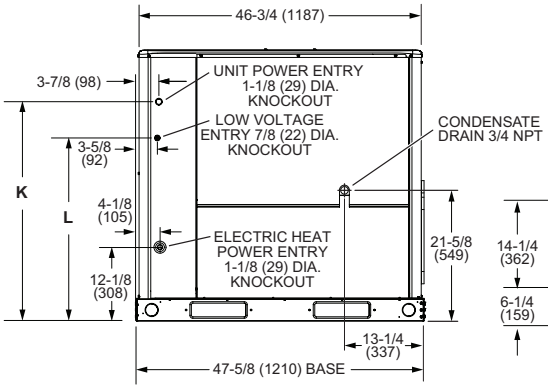

RIGHT SIDE VIEW

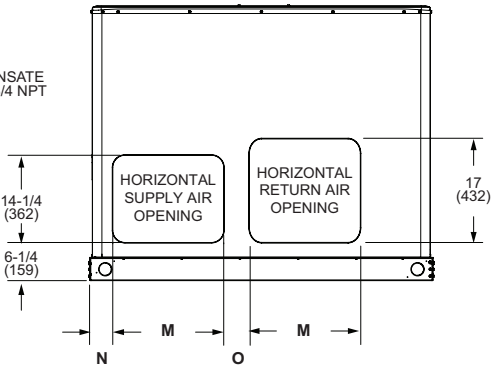

BACK VIEW

Size	A		B		C		D		E		F		G	
	in.	mm	in.	mm	in.	mm	in.	mm	in.	mm	in.	mm	in.	mm
24, 36	47-5/8	1210	40-7/8	1038	47-5/8	1210	16-3/4	425	14	356	2	51	20-1/4	514
48, 60	55-1/4	1403	44-7/8	1140	56-1/8	1426	19-1/2	495	19-1/2	495	2-1/8	54	25-7/8	657
Size	**H**		**I**		**J**		**K**		**L**		**M**		**N**	
	in.	mm	in.	mm	in.	mm	in.	mm	in.	mm	in.	mm	in.	mm
24, 36	21	533	23-1/4	591	32-1/4	819	26-1/4	667	13-1/2	343	3-1/8	79	5-7/8	149
48, 60	26-1/2	673	26-3/4	679	36-1/4	921	30-1/4	768	18-1/4	463	3-3/4	95	4-3/8	111

CLIP CURB

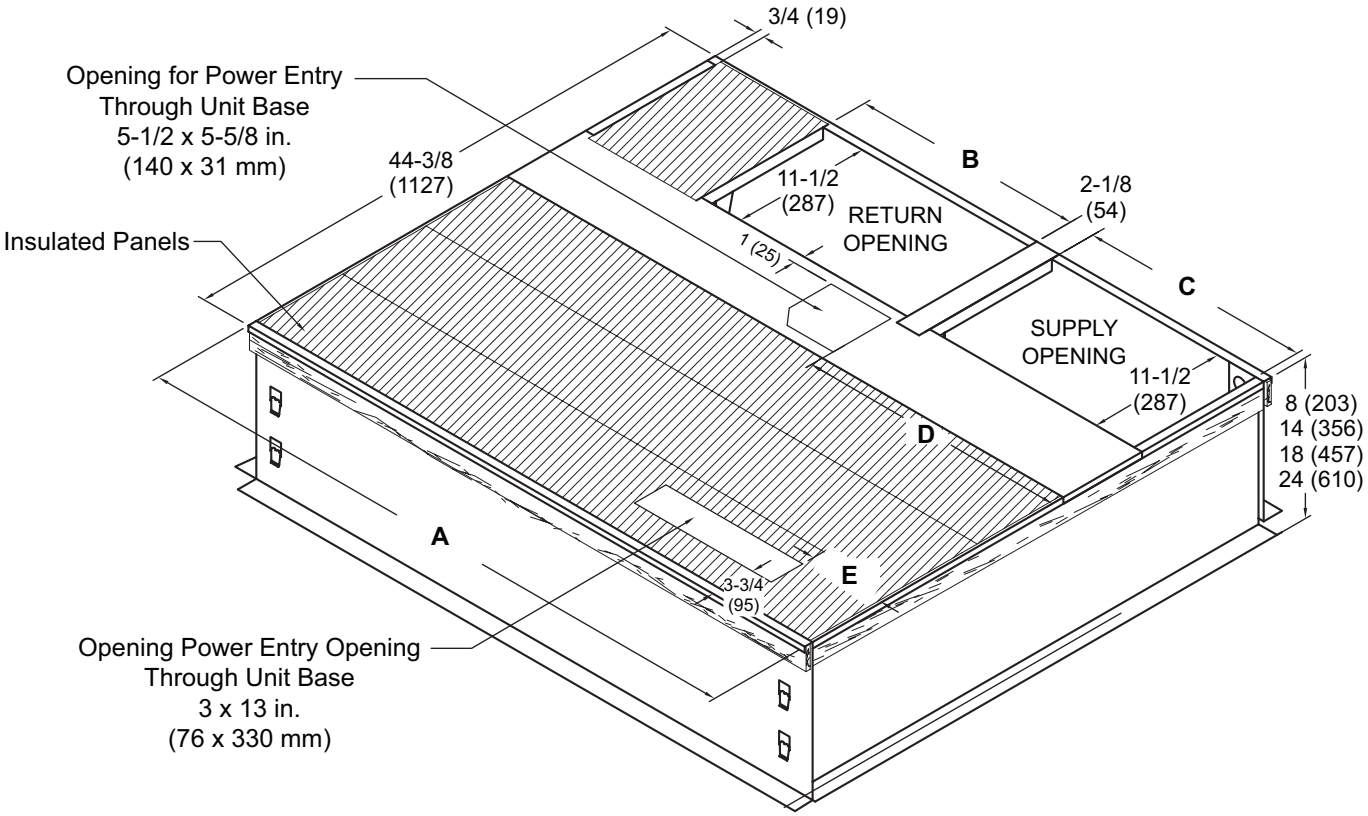

NOTE - Roof deck may be omitted within confines of curb.

TYPICAL FLASHING DETAIL FOR ROOF CURB

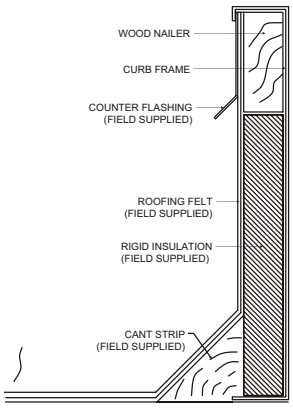

DETAIL ROOF CURB

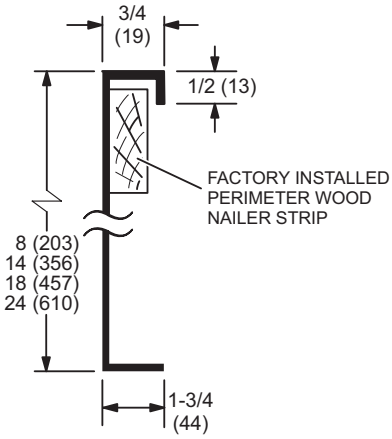

Usage	A		B		C		D		E	
	in.	mm	in.	mm	in.	mm	in.	mm	in.	mm
24, 36	44-3/8	1127	16-7/8	429	13-7/8	352	17-1/4	438	1-1/4	32
48, 60	52-7/8	1343	19-1/2	380	19-1/2	352	23-1/8	587	7	178

ADJUSTABLE PITCH ROOF WELDED CURB

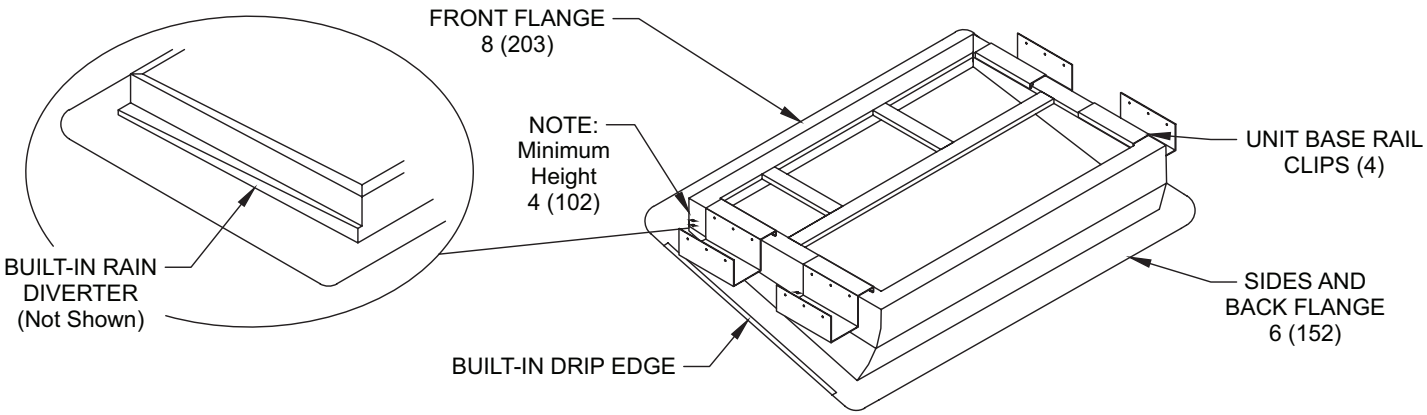

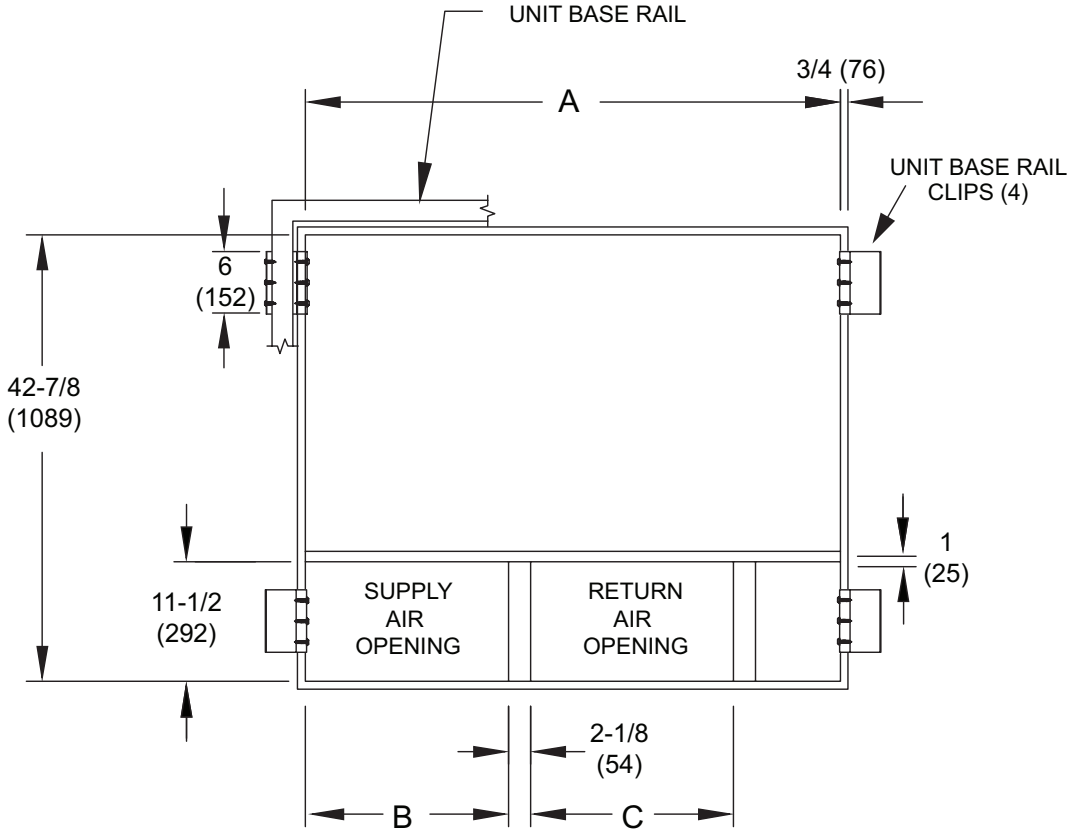

Usage	A		B		C	
	in.	mm	in.	mm	in.	mm
24, 36	42-7/8	1089	13-7/8	352	16-7/8	429
48, 60	51-3/8	1305	19-1/2	495	19-1/2	495

ADJUSTABLE PITCH ROOF CLIP CURB

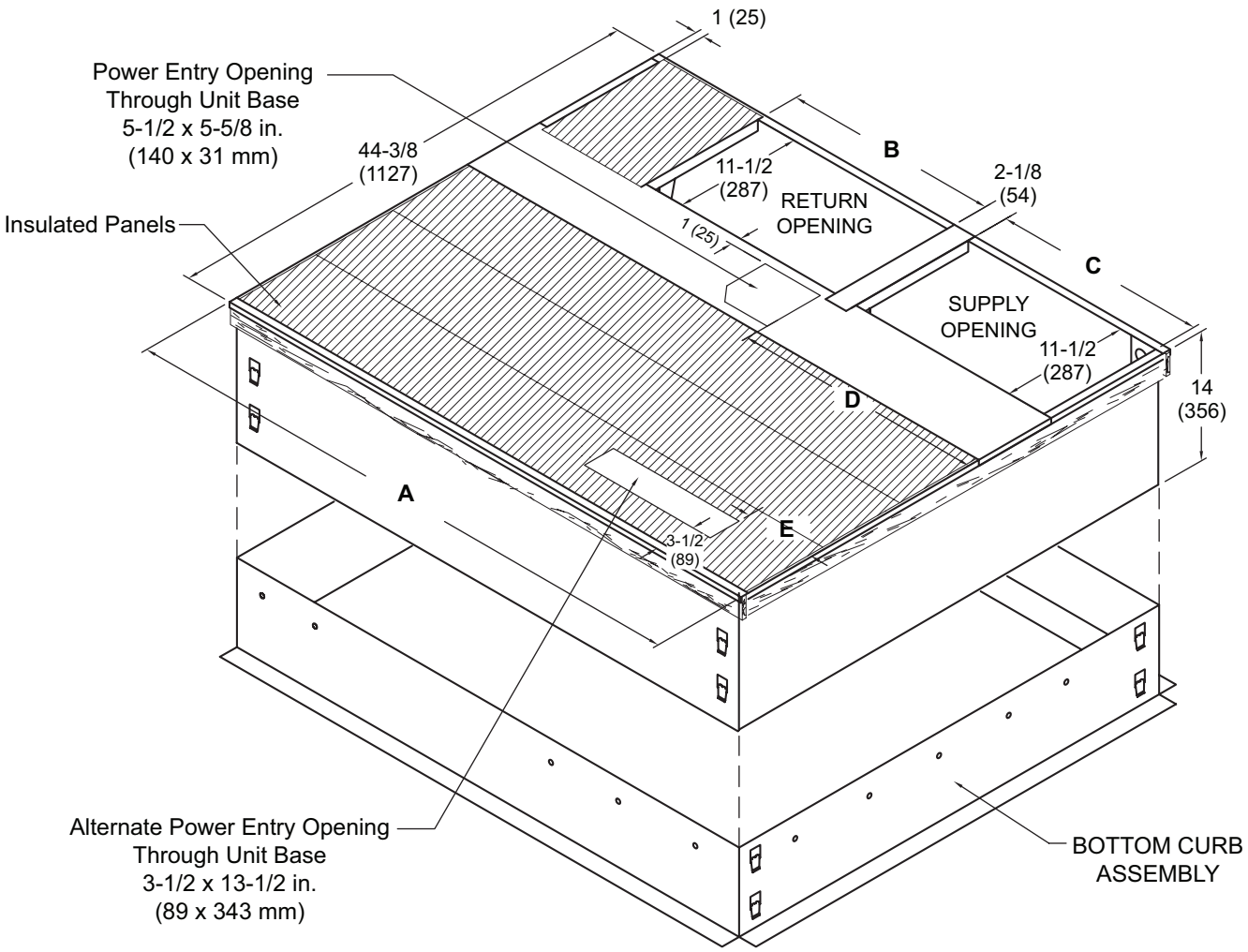

NOTE - Roof deck may be omitted within confines of curb.

TYPICAL FLASHING DETAIL FOR ROOF CURB

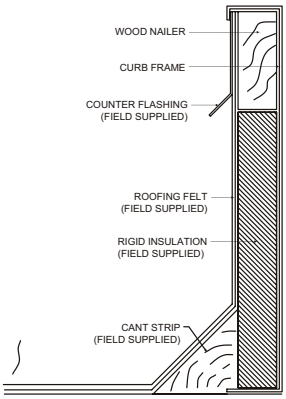

DETAIL ROOF CURB

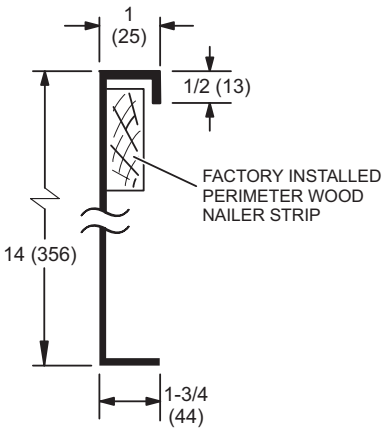

Usage	A		B		C		D		E	
	in.	mm	in.	mm	in.	mm	in.	mm	in.	mm
24, 36	44-3/8	1127	16-7/8	429	13-7/8	352	17-1/4	438	1-1/4	32
48, 60	52-7/8	1343	19-1/2	380	19-1/2	352	23-1/8	587	7	178

REVISIONS

Sections	Description of Change
Electrical Data	Updated.
Cooling/Heating Ratings	Updated.
Specifications	Updated cooling/heating performance, sound data, refrigerant charge and weights

Visit us at www.Lennox.com
For the latest technical information, www.LennoxPros.com
Contact us at 1-800-9-LENNOX

NOTE - Due to Lennox' ongoing commitment to quality, Specifications, Ratings and Dimensions subject to change without notice and without incurring liability.
Improper installation, adjustment, alteration, service or maintenance can cause property damage or personal injury.
Installation and service must be performed by a qualified installer and servicing agency.

©2023 Lennox Industries, Inc.