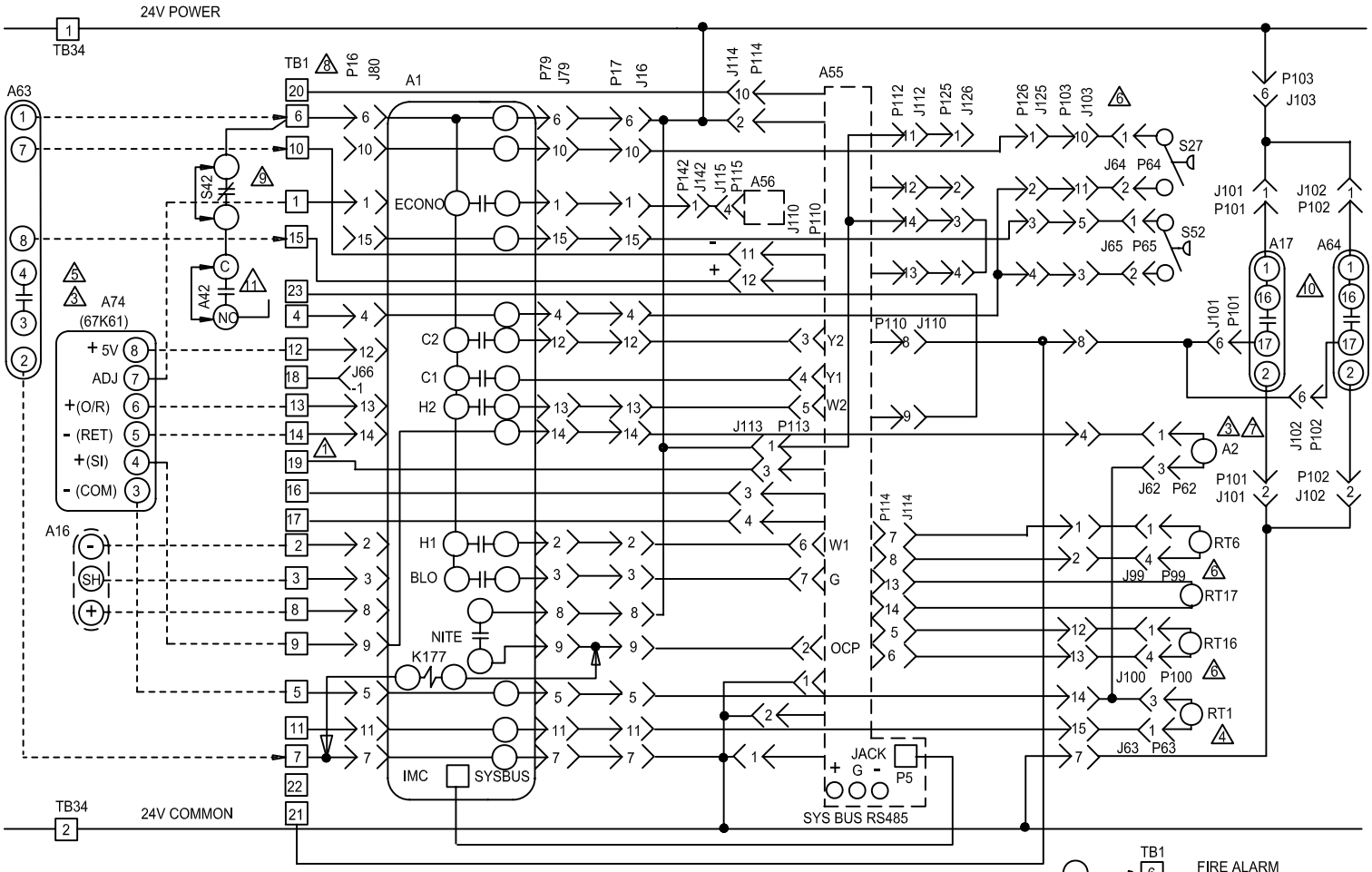

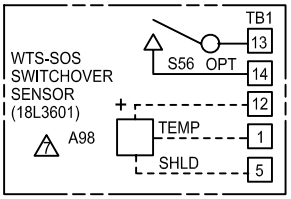

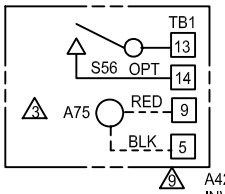

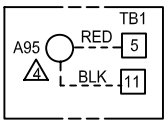

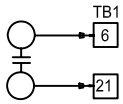

DESCRIPTION	
KEY	COMPONENT
A1	PANEL-LOGIC
A2	SENSOR-RETURN AIR (NOVAR)
A16	CONTROL-MICROPROCESSOR, EP
A17	DETECTOR-SMOKE
A42	MONITOR-PHASE PROTECTION
A55	PANEL-MAIN
A56	PANEL-ECONOMIZER
A63	SENSOR-CO2(1AQ) OPTIONAL
A64	DETECTOR-SMOKE,SUPPLY AIR
A74	SENSOR-ROOM (64K61)
A75	SENSOR-ROOM (95H5301)
A95	SENSOR-AVERAGING
A98	SENSOR-TEMP SWITCHOVER
J16	JACK-UNIT
J62	JACK-A2 RETURN AIR SENSOR
J63	JACK-RT1 DISCH. AIR SENSOR
J64	JACK-S27 FILTER SWITCH
J65	JACK-S52 FAN SWITCH
J66	JACK-COOL 1 INTERFACE
J79	JACK-PIGTAIL TO P17
J80	JACK-HEADER
J99	JACK-DISCHARGE TEMP SENSOR
J100	JACK-RETURN TEMP SENSOR
J101	JACK-SMOKE DETECTOR,RETURN AIR
J102	JACK-SMOKE DETECTOR,SUPPLY AIR
J103	JACK-SENSORS,CONTROL
J110	JACK-THERMOSTAT INPUT
J112	JACK-COOLING SENSOR INPUT
J113	JACK-BLOWER & COOL 1 CONTROL
J114	JACK-SENSOR INPUT
J115	JACK-ECONOMIZER OUTPUT
J125	JACK-BLOWER PROVING
J126	JACK-JUMPER,BLOWER PROVING
J142	JACK-ECONOMIZER HARNESS
K177	RELAY-ERV, NITE
P16	PLUG-UNIT
P17	PLUG-LOGIC PANEL
P62	PLUG-A2 RA SENSOR
P63	PLUG-RT1 DA SENSOR
P64	PLUG-S27 FILTER SWITCH

DESCRIPTION	
KEY	COMPONENT
P65	PLUG-S50 FAN SWITCH
P66	PLUG-COOL ONE
P79	PLUG-HEADER,NOVAR
P99	PLUG-DISCHARGE TEMP SENSOR
P100	PLUG-RETURN TEMP SENSOR
P101	PLUG-SMOKE DETECTOR,RETURN AIR
P102	PLUG-SMOKE DETECTOR,SUPPLY AIR
P103	PLUG-SENSORS,CONTROL
P110	PLUG-THERMOSTAT INPUT
P112	PLUG-COOLING SENSOR INPUT
P113	PLUG-BLOWER & COOL 1 CONTROL
P114	PLUG-SENSOR INPUT
P115	PLUG-ECONOMIZER OUTPUT
P125	PLUG-BLOWER PROVING
P126	PLUG-JUMPER,BLOWER PROVING
P142	PLUG-ECONOMIZER HARNESS
RT1	SENSOR-DISCHARGE
RT6	SENSOR-A55 DISCHARGE (IMC)
RT16	SENSOR-RETURN AIR TEMP
RT17	SENSOR-OUTSIDE AIR TEMP
S27	SWITCH-FILTER
S42	OVERLOAD-RELAY,BLOWER MOTOR
S52	SWITCH-AIR FLOW
S56	SWITCH-MOMENTARY OVERIDE
TB1	TERMINAL STRIP-24V CLASS II
TB34	TERMINAL STRIP-TRANSFORMER T1

11 A42 CONTACTS CLOSE ON POWER UP, UNLESS THERE IS A FAILURE MODE.

10 TERMINAL DESIGNATIONS WHEN USING DH400 SENSOR

9 A42 AND S42 HOOKUP FOR UNITS LESS INVERTER,SEE INVERTER WITH BYPASS DIAGRAMS FOR S42 HOOKUP

8 TB1-20 FOR DEHUMIDIFICATION CONTROL

7 A2 RETURN AIR SENSOR REMAINS IN PLACE WHEN A98 SWITCHOVER SENSOR WTS-SOS(18L3601) IS USED

6 J99/P99,J100/P100 AND J103/P103 ARE NOT USED ON -036,042,048,060,072,088 AND 100 UNITS

5 ALTERNATE A74 ROOM SENSOR, USED IN PLACE OF A75

4 A95 AVERAGING SENSOR MAY BE USED WITH A74 OR A75 ROOM SENSORS. DISCONNECT RT1 DISCHARGE AIR SENSOR (NOVAR) WHEN A95 IS USED

3 DISCONNECT A2, RETURN AIR SENSOR PLUG,P62, FROM UNIT JACK,J62, WHEN A74 OR A75 ROOM SENSOR IS USED

2 FOR MOTORS WITH S42 EXTERNAL OVERLOAD AND WITH A55(IMC) SOFTWARE VERSION 1.07 & NEWER

1 TB1-19 IS SERVICE RELAY OUTPUT(24VAC). IF USED CONNECT TO A INDICATOR LIGHT OR RELAY COIL (MAX 4VA)

DESIGNATES OPTIONAL WIRING

CLASS II FIELD WIRING

WIRING DIAGRAM	8/08
ACCESSORIES	
CONTROL FOR "L" SERIES AND "S" CLASS NOVAR ETM-2051	
TEMPERATURE CONTROL SECTION C15	
Supersedes Form No.	New Form No. 534,745W

© 2008

Litho U.S.A.