EL296DFV

ELITE® SERIES

Downflow - Two-Stage Heating - Variable Speed Blower - 60Hz

RESIDENTIAL PRODUCT SPECIFICATIONS

Bulletin No. 210620
July 2024
Supersedes all previous versions

ELITE® SERIES

ENERGY STAR

AFUE - 96%
Input - 44,000 to 110,000 Btuh
Nominal Add-on Cooling - 2 to 5 Tons

MODEL NUMBER IDENTIFICATION

EL 2 96 DF 070 X V 48 B

Unit Type
EL = Elite® Series

Stages
2 = Two-Stage

AFUE
96 = 96%

Configuration
DF = Downflow

Nominal Gas Heat Input
045 = 44,000 Btuh
070 = 66,000 Btuh
090 = 88,000 Btuh
110 = 110,000 Btuh

[1] Cabinet Width
B = 17-1/2 in.
C = 21 in.

Nominal Add-On Cooling Capacity
36 = 3 tons
48 = 4 tons
60 = 5 tons

Blower
V = Variable Speed Blower Motor

Low NOx
X = Units meet California Nitrogen Oxides Standard (40 ng/J)

[1] Downflow indoor coils with the same letter designation physically matches the furnace **supply air opening**.

FEATURE HIGHLIGHTS

1. Lennox Duralok Plus™ Heat Exchanger
2. Secondary Heat Exchanger
3. Inshot Burners
4. Two-Stage Gas Control Valve
5. Two-Speed Combustion Air Inducer
6. SureLight® Integrated Furnace Control
7. Variable Speed Direct Drive Blower
8. Insulated Cabinet
9. Safety Interlock Switch
10. Gas Piping And Electrical Inlets

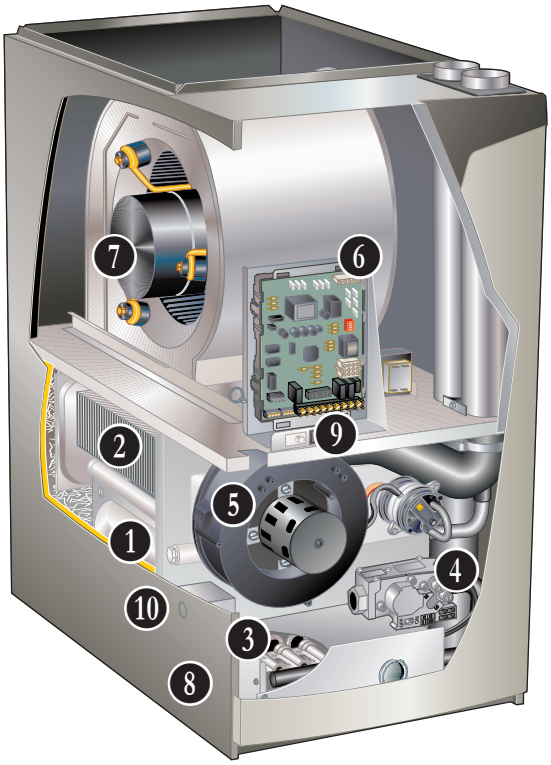

NOTE - EL296V FURNACES CANNOT BE TWINNED!

CONTENTS

Blower Data 20
Approvals And Warranty 3
Dimensions 14
- Furnace/Coil Combined Dimensions 19
- Optional Accessories 15
- Optional Accessories - Venting. 16
- Unit 14
Features 3
Gas Heat Accessories 13
High Altitude Derate 13
Installation Clearances 9
Model Number Identification. 1
Optional Accessories - Order Separately 10
Specifications 9
Vent Lengths 12
Vent Lengths - Exhaust Using Ventilated Attic/Crawlspace Intake Air. 13
Vent Lengths - Uninsulated Exhaust Pipe In Unconditioned Space 11

APPROVALS AND WARRANTY

APPROVALS

- AHRI Certified
- CSA International Certified
- Tested and rated according to US DOE test procedures and FTC labeling regulations
- Units are approved for installations from 0 - 4500 ft.
- ENERGY STAR® certified units are designed to use less energy, help save money on utility bills, and help protect the environment
- ISO 9001 Registered Manufacturing Quality System
- Blower data from unit tests conducted in Lennox Laboratory air test chamber

NOTE - This furnace has not been CSA International design certified for installation in mobile homes, recreational vehicles, or outdoors.

California Only

- These furnaces **do not meet** the South Coast Air Quality Management District (SCAQMD) Rule 1111 and San Joaquin Valley Air Pollution Control District (SJVAPCD) Rule 4905 NOx emission limit (14 ng/J) and cannot be installed within the SCAQMD, SJVAPCD and Bay Area.
- These furnaces are approved by the California Energy Commission and meets California Nitrogen Oxides Standard (NOx) limits of 40 ng/J

WARRANTY

- Duralok Plus™ Aluminized Steel Heat Exchanger:
  - Limited lifetime (twenty year transferable) in residential applications
  - Limited ten years in non-residential applications
- All other covered components:
  - Limited five years in residential installations
  - Limited one year in non-residential installations

NOTE - Refer to Lennox Equipment Limited Warranty certificate included with unit for specific details.

FEATURES

APPLICATIONS

- Input capacities of 44,000, 66,000, 88,000 and 110,000 Btuh
- Energy efficiency (AFUE) - 96%
- Compact cabinet for downflow applications without any internal modifications to the unit
- Lennox add-on indoor coils, high-efficiency air cleaners and humidifiers can easily be added to furnace
- Shipped factory assembled with controls installed and wired
- Each unit factory test operated to ensure proper operation

ZONING APPLICATIONS

- The EL296V furnace is designed to work with the Lennox ® Smart Zoning System with the Lennox® Communicating Thermostat
- The Lennox Smart® Zoning System provides direct feedback to the furnace, controlling both airflow and heat output to precisely match the comfort requirements for up to four zones

HEATING SYSTEM

1 Lennox Duralok Plus™ Heat Exchanger Assembly

- Lennox developed heat exchanger assembly consists of primary heat exchanger and secondary condenser coil assembly
- Main multi-pass crimped seam design clamshell type
- Constructed of heavy-gauge, aluminized steel
- Designed for normal expansion and contraction with maximum efficiency and minimum resistance to air flow

2

- Secondary heat exchanger condenser coil constructed of aluminum fins fitted to stainless steel tubes
- Coil is factory tested for leaks
- Condensate drain header box assembly located on front of coil
- Compact size permits low overall design of furnace cabinet
- Laboratory life cycle tested in excess of industry standards

HEATING SYSTEM (continued)

Lennox Designed Header Box
- Header box on end of condenser coil collects flue condensate for disposal through condensate drains
- The drains are located on each side of the cabinet for easy field installation of condensate drain trap
- Only one drain is used, the other drain is sealed
- Condensate drain trap is included with unit for field installation

Lennox Designed Flue Condensate Trap Assembly
- Field installed outside the conditioned air stream
- Assembly can be mounted on either side of cabinet
- See Installation Instructions
- 90° street elbow furnished for ease of drain trap installation
- Drain connection can be made with field provided PVC pipe, PVC coupling, or vinyl tubing with hose clamp
- Drain cap on trap allows easy cleaning and winterizing

3 Inshot Burners
- Aluminized steel inshot burners provide efficient, trouble-free operation
- Burner venturi mixes air and gas in correct proportion for proper combustion
- Burner assembly is removable from the unit as a single component for ease of service

SureLight® Hot Surface Ignitor
- Tough, reliable, long-life, trouble-free performance
- Silicon nitride ignitor
- Cemented to steatite block for protection against current leakage
- Ignition leads are constructed of nickel plated copper and are enclosed in high temperature Teflon® insulation for dependable operation

4 Two-Stage Gas Control Valve
- 24 volt redundant combination two-stage gas control valve combines manual shut off switch (On-Off), automatic electric valve (dual) and gas pressure regulation into a compact combination control

5 Two-Speed Combustion Air Inducer
- Permanent split capacitor (PSC), heavy duty blower prepurges heat exchanger and safely vents flue products
- Dual pressure switches (low fire/high fire) prove blower operation before allowing gas valve to open
- Operates only during heating cycle

Flame Rollout Switches (2)
- Factory installed on burner box
- Switch provides protection from abnormal operating conditions
- Manual reset

Limit Control
- Primary limit is accurately located on vestibule panel on all units
- Automatic reset

Optional Accessories

High Altitude Orifice Kits
- Required on all units for proper unit operation at altitudes from 7501 to 10,000 ft.
- Kits are available for natural gas and LPG/propane

High Altitude Pressure Switch Kit
- Required for proper unit operation on installations above 4500 ft.

Natural Gas to LPG/Propane Conversion Kit
- Required for field changeover from natural gas to LPG/Propane

LPG/Propane to Natural Gas Conversion Kit
- Required for field changeover from LPG/Propane to natural gas

Muffler (US Only)
- Significantly reduces outdoor operating sound levels
- Two-inch diameter muffler is optional for 045 through 110 input models

NOTE - Two-inch muffler is optional for the 110 input model with a maximum vent pipe length of up to 29 ft. Three-inch diameter muffler is optional for 110 and 135 input models.

NOTE - Three-inch muffler is optional for the 110 input model with a minimum vent pipe length of 30 ft.

- Installed vertically in the exhaust piping
- See Optional Accessory Dimension Drawing

DIRECT VENT / NON-DIRECT VENT SEALED COMBUSTION SYSTEM

- Furnace features a “sealed combustion” system and can be installed in either Direct Vent or Non-Direct applications
- In Direct Vent applications, combustion air is supplied from outdoors and flue gases are discharged outdoors
- In Non-Direct Vent applications, combustion air is supplied from indoors and flue gases are discharged outdoors

NOTE - Lennox has approved the use of DuraVent® PolyPro® and Centrotherm InnoFlue® manufactured vent pipe and terminations as an alternative to PVC vent pipe. Must be ordered separately.

- Tested and listed to the ULC S636 standard in Canada
- The polypropylene venting system must follow the uninsulated and unconditioned space vent lengths listed in the table on 12
- Refer to the Installation Instructions for additional details

Flue Coupling
- Assists with exhaust flue piping connection and servicing
- Includes flexible one 2 inch rubber coupling and two adjustable bands
- Approved for all Lennox 90% furnaces

DIRECT VENT / NON-DIRECT VENT SEALED COMBUSTION SYSTEM (continued)

Termination Kits

- Facilitates installation of combustion air intake pipe and flue exhaust pipe
- Refer to venting table in this bulletin to determine pipe size needed and proper termination kit required
- Certain Termination Kits are certified to ULC S636 standard for use in Canada only
- See Optional Accessories table and dimension drawings

Concentric - Direct Vent Applications

- 2 or 3 inch kit contains concentric termination assembly, reducer bushing and 45 degree elbow
- 2 inch kit for -045-070 models contains an outdoor exhaust accelerator
- Kit requires single hole penetration of roof or wall for installation
- Roof Termination Flashing Kit is available for use with 2 inch Kits
- CSA certified

Flush-Mount

- Kit contains flush-mount termination, accelerator, mounting template and hardware
- Kit may be used with 2, 2-1/2 or 3 in. pipe

Wall Assembly
Close Couple (US Only) - Direct Vent Applications

- 2 or 3 inch kit consists of close-couple, side-by-side PVC piping with galvanized steel wall cover plate for sealing and isolating piping penetration of the wall
- Piping spacing and length is sized for proper wall installations
- CSA certified

Close Couple WTK (Canada Only) - Direct Vent Applications

- 2 or 3 inch kit contains one insulated faceplate, one insulated exhaust pipe, elbow and fittings. Certified to ULC S636 standard

NOTE - Maintain a maximum of 6 inches between the inlet and outlet openings in the installation of the pipes.

Roof Termination Flashing Kit

- For vertical venting through a roof
- 2 or 3 inch kit contains two neoprene rubber roof flashings
- Vent pipe and insulation not furnished
- Flashing Kit can also be used with Concentric Vent Termination Kits used in vertical venting rooftop applications

Left Side Vent Kit

- Allows venting out the left side of the cabinet. Kit contains left vent tube and seal plate

CONTROLS

6 SureLight® Control (Lennox® Communicating)

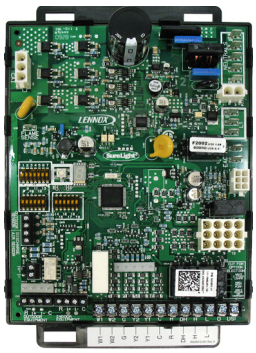

- Advanced control communicates information about various operating parameters in the furnace to the optional Lennox® Communicating Thermostat to constantly maintain the highest level of comfort and performance available
- Auto Configuration - On start-up the control automatically sends a description of the unit to the optional Lennox® Communicating Thermostat to automatically configure the number of stages and features available
- Terminals for connecting a conventional heating/cooling thermostat are also provided on the control
- Control also features Innovative AirFlex™ technology which allows custom blower settings based on the application
- Thermostat Control - For optimal performance, the use of a high-quality, digital two-stage thermostat with adjustable settings for first stage/second stage, on/off differentials and adjustable stage timers is recommended

Furnace Input Staging Options

Thermostat Type	Input Staging Available
Lennox® Communicating Thermostat	Two-Stage (65 and 100%)
Two-Stage (Conventional)	
Single-Stage (Conventional)	

- Safety Controls - Flame sensor utilizes flame rectification for safe and reliable operation
- Should flame fail to ignite, control will initiate 4 re-attempts at ignition before locking out unit operation for 60 minutes
- Watchguard type circuit automatically resets ignition control after one hour of continuous thermostat demand after unit lockout, eliminating nuisance calls for service
- Display LED - Seven segment LED displays alpha-numeric information related to diagnostics as well as system operation and status
- Diagnostic codes are held in non-volatile memory, immune from power interruptions
- Holds up to ten diagnostic codes in order of occurrence for recall on demand
- Port on blower door allows for easy viewing

CONTROLS (continued)

DIP Switch Settings

- Select Thermostat Used - Single-Stage or Two-Stage
- Two selectable second stage recognition times (7 and 12 minutes) are available on the control when the furnace is used with a single-stage thermostat
- When used with a two-stage thermostat, furnace will only initiate second stage operation with a second stage thermostat demand
- Heating Speeds - A combination of DIP switch settings allow the following motor speed selection settings within the heating speed selected for fine tuning air volume:
  - Factory default
  - 6%, 12%, 18% or 24% increase
  - 6%, 12% or 18% decrease
  - See Blower Performance tables
- Cooling Speeds - A combination of DIP switch settings allow the following motor speed selection settings within the cooling speed selected for fine tuning air volume:
  - Factory default
  - 10% increase
  - 10% decrease
  - See Blower Performance tables
- Blower Speed Ramping (Cooling Mode) - DIP switch settings allow one of four blower speed profiles during cooling operation
  - Profile A (factory setting) - Motor runs at 50% for 30 seconds, then at 82% for 7-1/2 minutes, then at 100% (if needed) until demand is satisfied. Once demand is met, motor runs at 50% for 30 seconds, then ramps down to stop
  - Profile B - Motor runs at 82% for 7-1/2 minutes and then at 100% (if needed) until demand is satisfied. Once demand is met,motor ramps down to stop
  - Profile C - Motor runs at 100% until demand is satisfied. Once demand is met, motor runs at 100% for 60 seconds, then ramps down to stop
  - Profile D - Motor runs at 100% until demand is satisfied. Once demand is met, motor ramps down to stop
- Dehumidification (Active or Humiditrol® Option) - A jumper on the control must be clipped to enable active dehumidification and/or operation with a Humiditrol® Whole-Home Dehumidification System
- A humidity controlling thermostat or device is also required
- During a call for cooling, air volume is automatically reduced, forcing humidity removal by the air conditioner or heat pump system (single stage units or two-stage units running at 2nd stage)
- After the humidity has reached the desired set-point the cooling air volume returns to its designed rate
- A dehumidification signal from the thermostat reduces the cooling cfm to 70% of the requested cooling cfm
- Dual-Fuel Operation - A jumper on the control must be clipped to enable operation with a single or two-stage heat pump. The indoor blower is started without delay when a call for heat is received
- Two-Stage Compressor Operation - A jumper on the control must be clipped to enable operation with a two-stage compressor
- The cooling blower speeds for first and second stage cooling will be dictated by the applicable DIP switch settings
- Lennox System Operations Monitor Connection - Monitors outdoor unit operation (communicating mode)
- Blower On/Off Time (Heating) - Blower on time is fixed at 30 seconds, blower off time is adjustable from 60, 90, 120 and 180 seconds (factory setting - 90 seconds)
- Blower On/Off Time (Cooling) - For air-conditioning applications, blower on time is 2 seconds following thermostat demand for cooling
- See Blower Speed Ramping (Cooling Mode) profiles for various blower off details
- Controls evaporator humidity by controlling blower and compressor speed on two-stage outdoor units when used with the Lennox® Communicating Thermostat or the CS7500 Thermostat
- Continuous Blower Speed - Adjustable continuous blower speed is a percentage of the high cooling speed selection
- Two selectable options (via DIP switch settings) of 28% and 38% (default setting)
- Accessory Terminal - One accessory terminal furnished for additional power supply requirements for 120 volt (less than 1 amp) powered air cleaners
- One unpowered pair of contacts are provided for humidifier connections and may be connected to 24V or 120V
- Control is factory installed in the unit control box

24 Volt Transformer (40VA)

- Furnished and factory installed on outside of control box
- Circuit breaker (furnished) is wired in series

Field Wiring Make-Up Box

- Furnished for line voltage wiring
- Factory installed internally on left side of furnace
- Box may be installed internally on right side of furnace

FEATURES

CONTROLS (continued)

Optional Accessories

S40 Smart Wi-Fi Thermostat (part of the Lennox® Residential Communicating Control System)

- Recognizes and connects to all Lennox® Communicating products to automatically configure and control the heating/cooling system (based on user-specified settings) for the highest level of comfort, performance and efficiency

- Recognizes model and serial number information for Lennox® Communicating products to simplify system setup
- Lennox Smart Room Sensors, Lennox Wireless Extenders and Lennox Smart Air Quality Monitor can be added to the system
- Smart home automation compatible with Amazon Alexa®, Google Assistant, Control4® and Building36®
- Sends service alerts and reminders
- Lennox Smart Thermostat App features Wi-Fi remote temperature monitoring and adjustment through a home wireless network apps for smartphones or tablets
- Lennox Smart Technician App allows installer to manage systems in the home
- Service Dashboard features online real-time monitoring and advanced diagnostics of installed Lennox® Communicating systems
- Simple easy-to-use touchscreen allows complete system configuration
- Scheduled maintenance alerts, system warnings and troubleshooting are also displayed on thermostat screen
- Easy to read 7 inch high definition color display (measured diagonally)
- Conventional outdoor units (not Lennox® Communicating) can easily be added and controlled by the S40 Thermostat
- Installer setup screens allow quick and simple system configuration without a manual, Installer can also run tests on complete system or individual components for easy maintenance and troubleshooting
- Serial communications bus (RSBus), with less wiring than a conventional heating/cooling system, allows system communication
- Uses standard 4-wire unshielded thermostat wiring
- High Definition Color Display with Subbase and wallplate furnished for easy installation

NOTE - See the Lennox® S40 Thermostat Product Specifications bulletin in the Controls section for more information.

E30 Smart Wi-Fi Thermostat

- Wi-Fi enabled, electronic 7-day, universal, multi-stage, programmable, touchscreen thermostat
- 3 Heat/2 Cool
- Auto-changeover
- Controls dehumidification during cooling mode and humidification during heating mode

- Offers enhanced capabilities including humidification / dehumidification / dewpoint measurement and control, Humiditrol® control, and equipment maintenance reminders
- Easy to read 7 in. color touchscreen (measured diagonally)
- LCD display with backlight shows the current and set temperature, time, inside relative humidity, system status (operating mode and schedules) and outside temperature (optional outdoor sensor required)
- Smooth Setback Recovery starts system early to achieve setpoint at start of program period
- Compressor short-cycle protection (5 minutes)
- Up to four separate schedules are available plus Schedule IQ™
- One-Touch Away Mode - A quick and easy way to set the cooling and heating setpoints while away
- Smart Away™ - Uses geo-fencing technology to determine when the homeowner is within a predetermined distance from the home to operate the system when leaving, away and arriving
- Wi-Fi remote monitoring and adjustment through a home wireless network for desktop PCs, laptops and apps for smartphones or tablets
- Smart home automation compatible with Apple HomeKit™, Amazon Alexa®, Google Assistant and IFTTT
- Service Dashboard features online real-time monitoring of installed Lennox® Communicating systems
- High Definition Color Display with Subbase, Smart Hub Controller, wallplate (for retrofit installations) furnished for easy installation
- See the E30 Smart Wi-Fi Thermostat Product Specifications bulletin for more information

Remote Outdoor Temperature Sensor

- Allows thermostat to display outdoor temperature
- Automatically detected when connected to thermostat

NOTE - Sensor is required for the Enhanced Dehumidification Accessory (EDA).

NOTE - Sensor is furnished as standard with Lennox® Communicating outdoor units, optional for conventional units.

FEATURES

CONTROLS (continued)

Optional Accessories

Thermostat
- Thermostat is not furnished with unit
- See Lennox Price Book for selection

Transformer (75VA)
- Recommended when furnace is used with zoning or defrost thermostats and other 24V accessories requiring a higher VA rating
- Circuit breaker (furnished) is wired in series
- Replaces the standard 40VA transformer

BLOWER

7 Variable Speed Direct Drive Blower.
- Each blower assembly statically and dynamically balanced
- Blower assembly easily removed for servicing

Variable Speed Blower Motor
- Variable speed motor maintains specified air volume from 0 though 0.8 in. w.g. (heating) and 0 through 1.0 in. w.g. (Cooling) static range
- Variable speed operation is achieved by the use of an ECM (Electronically Commutated Motor) motor
- Motor is controlled by furnace control
- Change in blower speed is easily accomplished by simple DIP switch change on furnace control
- Motor is resiliently mounted
- When furnaces are used with the Lennox® Smart Zoning System and the Lennox® Communicating Thermostat, the blower motor operates from predetermined minimum - maximum air volumes to satisfy zone requirements
- See Blower Data tables

CABINET

- Low-profile, narrow width allows easy installation
- Heavy-gauge, cold rolled steel construction
- Pre-painted cabinet finish
- Flanges provided on supply air opening for ease of plenum connection or alignment with indoor coil
- 8 Insulated with foil faced insulation on sides and back of heating compartment and mat faced insulation in blower compartment
- Sealed blower compartment
- Inner blower compartment access panel seals blower compartment from air leakage
- Cabinet door can be removed without any tools
- Complete service access
- 9 Safety interlock switch automatically shuts off power to unit when blower compartment access door is removed
- 10 Gas piping and electrical inlets are provided in both sides of cabinet

Coil Match-Up
- All Lennox downflow indoor coils will physically match the furnace **supply air opening** with the same letter designation (A, B, C, D) as in the furnace model number

Low Leakage Cabinet
- All models have less than 2% air leakage
- Meets ANSI/ASHRAE Standard 193-2010 “Method of Test for Determining the Air Tightness of HVAC Equipment”

Optional Accessories

Condensate Drain Heat Cable Kits
- Self-limiting wattage heat cable prevents condensate drain from freezing in unconditioned areas
- Available in 6 or 24 ft. lengths

Crawl Space Vent Drain Kit
- Allows venting through a crawl space for downflow applications
- Kit for Canada is certified to ULC S636
- Includes 2 or 3 in. sanitary tee, 2 in. PVC assembly, PVC boot and clamp

Downflow Combustible Flooring Base
- Required for heating only units installed on combustible floors
- Not required in add-on cooling applications
- See Dimension Drawing

High Performance Economizer
(Commercial Applications Only)
- Designed for applications requiring outdoor air to be utilized in a commercial HVAC system
- Allows the entry of fresh outdoor air for free cooling, reducing the requirement for mechanical cooling
- Heavy gauge galvanized steel cabinet lined with thick fiberglass insulation
- Mixed air sensor, outdoor air sensor and 24VAC transformer furnished
- Approved for California Title 24 building standards. ASHRAE 90.1-2010 compliant
- See separate Product Specifications bulletin for additional information and available control and sensor options

NOTE - Economizer is not Lennox® Communicating compatible.

FILTER (not furnished)

- Filter and provisions for external mounting must be field provided

Optional Accessories

Downflow Filter Cabinet
- Filter cabinet mounts directly on top of furnace
- “B and “C” width cabinets have two filters
- Filter rails are furnished
- Front access for servicing
- Cleanable filter(s) are furnished

REFRIGERATION DETECTION SYSTEM (RDS)

Optional Accessories

Refrigerant Detection System (RDS) Coil Sensor Kit

- Complies with UL 60335-2-40 approved standard
- Required for field installation for all systems using R-454B refrigerant if sensor is not furnished with coil
- Consists of Refrigerant Detection System (RDS) sensor, lineset sleeves, mounting brackets and A2L labeling
- Sensor ensures safe operation for systems equipped with R-454B refrigerant
- Sensor will detect anu R-454B refrigerant

Refrigerant Detection System (RDS) Blower Control Board

Communicating Blower Control Board (Universal)

- Communicating Blower Control Board and Sensor can be used universally with any Lennox® communicating furnace or any non-communicating 24 volt furnace

Non-Communicating Blower Control Board

- Non-Communicating Blower Control Board and Sensor can be used with any non-communicating 24 volt furnace

Standard Features

- Complies with UL 60335-2-40 approved standard
- Required for all systems using R-454B refrigerant
- Connects to the RDS sensor furnished with the RDS Coil Sensor Kit
- Supports up to two RDS Sensors (factory setting)
- Used as an interface between indoor unit and thermostat to control system
- Ensures safe operation for systems equipped with R-454B refrigerant
- If R-454B refrigerant is detected, the refrigerant detection system will stop compressor and/or heating operating and operate the blower to reduce concentrations in the conditioned space
- Once safe levels are reached the HVAC system will resume normal operation
- Multi-color LED for system status and as an aid in troubleshooting
  - Flashing LED codes for system status (Green/Blue) and diagnosing Sensor errors (Red)
- Alarm relay can trigger an external alarm if R-454B refrigerant is detected
- Zone relay opens all zone dampers (if part of a zoning system) if R-454B refrigerant is detected
- Power is disabled to non-communicating thermostats to prevent demand if R-454B refrigerant is detected
- On system start-up blower will run for five minutes and any thermostat demands are disabled
- Dimensions (H x W x D): 7-7/16 x 7-7/16 x 2-1/2 (189 x 189 x 127 mm)

NOTE - See Refrigerant Detection System (RDS) Components Table on page 14.

See the CK40 Indoor Coil Product Specifications bulletins for more information.

Refer to the Installation Instructions for additional information.

SPECIFICATIONS

		Model No.	EL296DF045XV36B	EL296DF070XV48B	EL296DF090XV60C	EL296DF110XV60C
Gas Heating Performance		[1] AFUE	96%	96%	96%	96%
	High Fire	Input - Btuh	44,000	66,000	88,000	110,000
		Output - Btuh	43,000	64,000	85,000	106,000
		Temperature rise range - °F	35-65	35-65	40-70	45-75
		Gas Manifold Pressure (in. w.g.) Nat. Gas / LPG/Propane	3.5 / 10.0	3.5 / 10.0	3.5 / 10.0	3.5 / 10.0
	Low Fire	Input - Btuh	29,000	43,000	57,000	72,000
		Output - Btuh	28,000	42,000	56,000	70,000
		Temperature rise range - °F	20 - 50	25 - 55	30 - 60	35 - 65
		Gas Manifold Pressure (in. w.g.) Nat. Gas / LPG/Propane	1.7 / 4.5	1.7 / 4.5	1.7 / 4.5	1.7 / 4.5
High static - in. w.g.		Heating	0.8	0.8	0.8	0.8
		Cooling	1.0	1.0	1.0	1.0
Connections in.		Intake / Exhaust Pipe (PVC)	2 / 2	2 / 2	2 / 2	2 / 2
		Gas pipe size IPS	1/2	1/2	1/2	1/2
		Condensate Drain Trap (PVC pipe) - i.d.	3/4	3/4	3/4	3/4
		with furnished 90° street elbow	3/4 slip x 3/4 Mipt	3/4 slip x 3/4 Mipt	3/4 slip x 3/4 Mipt	3/4 slip x 3/4 Mipt
		with field supplied (PVC coupling) - o.d.	3/4 slip x 3/4 MPT	3/4 slip x 3/4 MPT	3/4 slip x 3/4 MPT	3/4 slip x 3/4 MPT
Indoor Blower		Wheel nom. diameter x width - in.	10 x 9	11 x 10	11 x 11	11 x 11
		Motor output - hp	1/2	3/4	1	1
		Tons of add-on cooling	2 - 3	2.5 - 4	3 - 5	3 - 5
		Air Volume Range - cfm	545 - 1360	575 - 1800	890 - 2130	860 - 2180
Electrical Data		Voltage	120 volts - 60 hertz - 1 phase			
		Blower motor full load amps	7.7	10.1	12.8	12.8
		Maximum overcurrent protection	15	20	20	20
Shipping Data		lbs. - 1 package	131	136	164	176

NOTE - Filters and provisions for mounting are not furnished and must be field provided.

[1] Annual Fuel Utilization Efficiency based on DOE test procedures and according to FTC labeling regulations. Isolated combustion system rating for non-weatherized furnaces.

INSTALLATION CLEARANCES

Sides	[1] 0 inches (0 mm)
Rear	0 inches (0 mm)
Top/Plenum	1 inch (25 mm)
Front	0 inches (0 mm)
Front (service/alcove)	24 inches (610 mm)
Floor	[2] Combustible

NOTE - Air for combustion must conform to the methods outlined in the National Fuel Gas Code (NFPA 54/ ANSI-Z223.1) or the National Standard of Canada CAN/CSA-B149.1 “Natural Gas and Propane Installation Code”.

NOTE - In the U.S. flue sizing must conform to the methods outlined in the current National Fuel Gas Code (NFPA 54/ANSI-Z223.1) or applicable provisions of local building codes. In Canada flue sizing must conform to the methods outlined in National Standard of Canada CAN/CSA-B149.1.

[1] Allow proper clearances to accommodate condensate trap and vent pipe installation.

[2] Clearance for installation on combustible floor if Optional Downflow Combustible Flooring Base is installed between furnace and combustible floor. Not required in add-on cooling applications if installed in accordance with local codes or National Fuel Gas Code ANSI-Z223.1 or CAN/CGA-149.1,.2. Do not install the furnace directly on carpeting, tile, or other combustible materials other than wood flooring.

OPTIONAL ACCESSORIES - ORDER SEPARATELY

NOTE - FURNACES CANNOT BE TWINNED!

		"B" Width Models	"C" Width Models
CABINET ACCESSORIES			
Downflow Combustible Flooring Base		**11M60**	**11M61**
High Performance Economizer (Commercial Only)		**10U53**	**10U53**
CONDENSATE DRAIN KITS			
Condensate Drain Heat Cable	6 ft.	**26K68**	**26K68**
	24 ft.	**26K69**	**26K69**
Crawl Space Vent Drain Kit	US	**51W18**	**51W18**
	Canada	**15Z70**	**15Z70**
CONTROLS			
S40 Smart Wi-Fi Thermostat		**22V24**	**22V24**
[1] Discharge Air Temperature Sensor		**88K38**	**88K38**
E30 Smart Wi-Fi Thermostat		**20A65**	**20A65**
[2] Remote Outdoor Temperature Sensor		**X2658**	**X2658**
Transformer (75VA)		**27J32**	**27J32**
FILTERS			
[3] Downflow Filter Cabinet		**51W07**	**51W08**
	No. and Size of filter - in.	(2) 16 x 20 x 1	(2) 16 x 20 x 1
VENTING			
Flue Coupling	2 in.	**17H92**	**17H92**
[4] Left Side Vent Kit	2 or 3 in.	**87W73**	**87W73**

[1] Optional for service diagnostics.

[2] Remote Outdoor Temperature Sensor is used with conventional (non-Lennox® Communicating) outdoor units (sensor is furnished with Lennox® Communicating outdoor units). Allows the thermostat to display outdoor temperature. Required in dual-fuel and EDA applications.

[3] Cleanable polyurethane, frame-type filter.

[4] NOTE - The curved exhaust pipe furnished with the Left Side Vent Kit counts as one additional 2 in. diameter 90° elbow. When using 3 in. diameter pipe, the furnished curved exhaust pipe and field provided fittings to transition from 2 in. to 3 in. count as 20 feet of equivalent pipe on all units.

NOTE - Termination Kits (**44W92**, **44W93**, **30G28**, **51W12**, **81J20**) and Crawl Space Vent Drain Kit (**15Z70**) are certified to ULC S636 standard for use in Canada only.

OUTDOOR TERMINATION KIT USAGE

Input Size	Vent Pipe Diameter (in.)	Standard Terminations				Concentric Terminations		
		Flush Mount Kit	Wall Kit		Field Fabricated Exhaust Accelerator Size Required	Concentric Kit		
			2 inch	3 inch		1-1/2 inch	2 inch	3 inch
		51W11 (US) [5] 51W12 (CA)	22G44 (US) [5] 30G28 (CA)	44J40 (US) [5] 81J20 (CA)		71M80 (US) [5] 44W92 (CA)	69M29 (US) [5] 44W92 (CA)	60L46 (US) [5] 44W93 (CA)
045	[1] 1-1/2	[4] YES	YES	[2] YES	1-1/2 in.	[3] YES	- - -	- - -
	2	[4] YES	YES	[2] YES	1-1/2 in.	[3] YES	- - -	- - -
	2-1/2	[4] YES	YES	[2] YES	1-1/2 in.	[3] YES	- - -	- - -
	3	[4] YES	YES	[2] YES	1-1/2 in.	[3] YES	- - -	- - -
070	[1] 1-1/2	[4] YES	YES	[2] YES	1-1/2 in.	[3] YES	- - -	- - -
	2	[4] YES	YES	[2] YES	1-1/2 in.	[3] YES	- - -	- - -
	2-1/2	[4] YES	YES	[2] YES	1-1/2 in.	[3] YES	- - -	- - -
	3	[4] YES	YES	[2] YES	1-1/2 in.	[3] YES	- - -	- - -
090	2	[4] YES	- - -	YES	2 in.	- - -	YES	YES
	2-1/2	[4] YES	- - -	YES	2 in.	- - -	YES	YES
	3	[4] YES	- - -	YES	2 in.	- - -	YES	YES
110	2	YES	- - -	YES	2 in.	- - -	YES	YES
	2-1/2	YES	- - -	YES	2 in.	- - -	YES	YES
	3	YES	- - -	YES	2 in.	- - -	YES	YES

NOTE - Standard Terminations do not include any vent pipe or elbows external to the structure.
Any vent pipe or elbows external to the structure must be included in total vent length calculations. See Vent Length Tables.

[1] 2 inch to 1-1/2 inch reducer required, must be field provided.

[2] Requires field provided 1-1/2 in. outdoor exhaust accelerator.

[3] Concentric Kits **71M80** and **44W92** include 1-1/2 in. outdoor exhaust accelerator, required when used with 045 and 070 input models. Accelerator is not used with 090, 110, 135 input models. When using 1-1/2 in. piping, the pipe must be transitioned to 2 in. pipe when used with the Concentric Kit.

[4] Flush Mount Kit **51W11** and **51W12** includes 1-1/2 in. outdoor exhaust accelerator, required when used with 045, 070 and 090 input models. Accelerator is not used with 110 or 135 input models. When using 1-1/2 in. piping, the pipe must be transitioned to 2 in. pipe when used with the Flush Mount Kit.

[5] Termination Kits **30G28**, **44W92**, **44W93**, **51W12** and **81J20** are certified to ULC S636 standard for use in Canada only.

VENT LENGTHS - UNINSULATED EXHAUST PIPE IN UNCONDITIONED SPACE

[1] Winter Design Temperatures	Vent Pipe Diameter	Unit Input Size							
		045		070		090		110	
		[2] Maximum Uninsulated Exhaust Vent Length (ft.)							
		PVC	PolyPro InnoFlue	PVC	PolyPro InnoFlue	PVC	PolyPro InnoFlue	PVC	PolyPro InnoFlue
32 to 21°F	1-1/2 in.	22	N/A	20	N/A	N/A	N/A	N/A	N/A
	2 in.	21	18	33	30	46	42	30	30
	2-1/2 in.	16	N/A	26	N/A	37	N/A	36	N/A
	3 in.	12	12	21	21	30	30	29	29
20 to 1°F	1-1/2 in.	12	N/A	20	N/A	N/A	N/A	N/A	N/A
	2 in.	11	9	19	17	28	25	27	24
	2-1/2 in.	7	N/A	14	N/A	21	N/A	20	N/A
	3 in.	N/A	N/A	9	9	16	16	14	14
0 to –20°F	1-1/2 in.	8	N/A	13	N/A	N/A	N/A	N/A	N/A
	2 in.	6	4	12	10	19	16	18	15
	2-1/2 in.	N/A	N/A	7	N/A	13	N/A	12	N/A
	3 in.	N/A	N/A	N/A	N/A	8	8	7	7

NOTE - Concentric terminations are equivalent to 5 ft. of straight pipe and should be included when measuring total pipe length.

[1] Refer to 99% Minimum Design Temperature table provided in the current edition of ASHRAE Handbook-Fundamentals.

[2] Maximum Equivalent Vent Length permitted is defined as Total Length (linear feet) of vent pipe, plus equivalent length (ft.) of fittings, plus equivalent length (ft.) of termination.

VENTING NOTES - Concentric Terminations are equivalent to 5 ft. of straight pipe and should be included when measuring total pipe length.
One 90° elbow is equivalent to 5 feet of straight vent pipe.
Two 45° elbows are equal to one 90° elbow.
One 45° elbow is equivalent to 2.5 feet of straight vent pipe.

PolyPro® poly-propylene vent pipe is a registered trademark of DuraVent®.

Innoflue® is a registered trademark of Centrotherm Eco Systems.

VENT LENGTHS

STANDARD TERMINATION AT ELEVATION 0 - 4500 ft.

Pipe Size		1-1/2 in.				2 in.				2-1/2 in.				3 in.			
	Input	045	070	090	110	045	070	090	110	045	070	090	110	045	070	090	110
No. of 90 ELL	1	20	15	N/A	N/A	71	56	34	14	105	105	83	48	128	127	108	108
	2	15	10	N/A	N/A	66	51	29	9	100	100	78	43	123	122	103	103
	3	10	N/A	N/A	N/A	61	46	24	4	95	95	73	38	118	117	98	98
	4	N/A	N/A	N/A	N/A	56	41	19	N/A	90	90	68	33	113	112	93	93
	5	N/A	N/A	N/A	N/A	51	36	14	N/A	85	85	63	28	108	107	88	88
	6	N/A	N/A	N/A	N/A	46	31	9	N/A	80	80	58	23	101	102	83	83
	7	N/A	N/A	N/A	N/A	41	26	4	N/A	75	75	53	18	98	97	78	78
	8	N/A	N/A	N/A	N/A	36	21	N/A	N/A	70	70	48	13	93	92	73	73
	9	N/A	N/A	N/A	N/A	31	16	N/A	N/A	65	65	43	8	88	87	68	68
	10	N/A	N/A	N/A	N/A	26	11	N/A	N/A	60	60	38	3	83	82	63	63

STANDARD TERMINATION ELEVATION 4501 - 10,000 ft.

Pipe Size		1-1/2 in.				2 in.				2-1/2 in.				3 in.			
	Input	045	070	090	110	045	070	090	110	045	070	090	110	045	070	090	110
No. of 90 ELL	1	20	15	N/A	N/A	71	56	34	N/A	105	105	83	48	128	127	108	108
	2	15	10	N/A	N/A	66	51	29	N/A	100	100	78	43	123	122	103	103
	3	10	N/A	N/A	N/A	61	46	24	N/A	95	95	73	38	118	117	98	98
	4	N/A	N/A	N/A	N/A	56	41	19	N/A	90	90	68	33	113	112	93	93
	5	N/A	N/A	N/A	N/A	51	36	14	N/A	85	85	63	28	108	107	88	88
	6	N/A	N/A	N/A	N/A	46	31	9	N/A	80	80	58	23	103	102	83	83
	7	N/A	N/A	N/A	N/A	41	26	4	N/A	75	75	53	18	98	97	78	78
	8	N/A	N/A	N/A	N/A	36	21	N/A	N/A	70	70	48	13	93	92	73	73
	9	N/A	N/A	N/A	N/A	31	16	N/A	N/A	65	65	43	8	88	87	68	68
	10	N/A	N/A	N/A	N/A	26	11	N/A	N/A	60	60	38	3	83	82	63	63

CONCENTRIC TERMINATION AT ELEVATION 0 - 4500 ft.

Pipe Size		1-1/2 in.				2 in.				2-1/2 in.				3 in.			
	Input	045	070	090	110	045	070	090	110	045	070	090	110	045	070	090	110
No. of 90 ELL	1	15	10	N/A	N/A	63	48	32	12	95	95	79	44	111	111	104	104
	2	10	N/A	N/A	N/A	58	43	27	7	90	90	74	39	106	106	99	99
	3	N/A	N/A	N/A	N/A	53	38	22	2	85	85	69	34	101	91	94	94
	4	N/A	N/A	N/A	N/A	48	33	17	N/A	80	80	64	29	96	96	89	89
	5	N/A	N/A	N/A	N/A	43	28	12	N/A	75	75	59	24	91	91	84	84
	6	N/A	N/A	N/A	N/A	38	23	7	N/A	70	70	54	19	96	86	79	79
	7	N/A	N/A	N/A	N/A	33	18	2	N/A	65	65	49	14	81	81	74	74
	8	N/A	N/A	N/A	N/A	28	13	N/A	N/A	60	60	44	9	76	76	69	69
	9	N/A	N/A	N/A	N/A	23	8	N/A	N/A	55	55	39	4	71	71	64	64
	10	N/A	N/A	N/A	N/A	18	3	N/A	N/A	50	50	34	N/A	66	66	59	59

CONCENTRIC TERMINATION ELEVATION 4501 - 10,000 ft.

Pipe Size		1-1/2 in.				2 in.				2-1/2 in.				3 in.			
	Input	045	070	090	110	045	070	090	110	045	070	090	110	045	070	090	110
No. of 90 ELL	1	15	10	N/A	N/A	63	48	32	N/A	95	95	79	44	111	111	104	94
	2	10	N/A	N/A	N/A	58	43	27	N/A	90	90	74	39	106	106	99	99
	3	N/A	N/A	N/A	N/A	53	38	22	N/A	85	85	69	34	101	101	94	94
	4	N/A	N/A	N/A	N/A	48	33	17	N/A	80	80	64	29	96	96	89	89
	5	N/A	N/A	N/A	N/A	43	28	12	N/A	75	75	59	24	91	91	84	84
	6	N/A	N/A	N/A	N/A	38	23	7	N/A	70	70	54	19	86	86	79	79
	7	N/A	N/A	N/A	N/A	33	18	2	N/A	65	65	49	14	81	81	74	74
	8	N/A	N/A	N/A	N/A	28	13	N/A	N/A	60	60	44	9	76	76	69	69
	9	N/A	N/A	N/A	N/A	23	8	N/A	N/A	55	55	39	4	71	71	64	64
	10	N/A	N/A	N/A	N/A	18	3	N/A	N/A	50	50	34	N/A	66	66	59	59

VENT LENGTHS - EXHAUST USING VENTILATED ATTIC/CRAWLSPACE INTAKE AIR

STANDARD TERMINATION AT ELEVATION 0 - 10,000 ft.

	Pipe Size	1-1/2 in.				2 in.				2-1/2 in.				3 in.			
	Input	045	070	090	110	045	070	090	110	045	070	090	110	045	070	090	110
No. of 90 ELL	1	15	10	N/A	N/A	61	46	24	4	90	90	68	33	108	107	88	88
	2	10	N/A	N/A	N/A	56	41	19	N/A	85	85	63	28	103	102	83	83
	3	N/A	N/A	N/A	N/A	51	36	14	N/A	80	80	58	23	98	97	78	78
	4	N/A	N/A	N/A	N/A	46	31	9	N/A	85	75	63	18	93	92	73	73
	5	N/A	N/A	N/A	N/A	41	26	4	N/A	70	70	48	13	88	87	68	68
	6	N/A	N/A	N/A	N/A	36	21	N/A	N/A	65	65	43	8	83	82	63	63
	7	N/A	N/A	N/A	N/A	31	16	N/A	N/A	60	60	38	3	78	77	58	58
	8	N/A	N/A	N/A	N/A	26	11	N/A	N/A	55	55	33	N/A	73	72	53	53
	9	N/A	N/A	N/A	N/A	21	6	N/A	N/A	50	50	28	N/A	68	67	48	48
	10	N/A	N/A	N/A	N/A	16	1	N/A	N/A	45	45	23	N/A	63	62	43	43

GAS HEAT ACCESSORIES

Input	High Altitude Pressure Switch Kit		Natural Gas to LPG/Propane Kit	LPG/Propane to Natural Gas Kit	Natural Gas High Altitude Orifice Kit	LPG/Propane High Altitude Orifice Kit	Muffler (US Only)
	4501 - 7500 ft.	7501 - 10,000 ft.	0 - 7500 ft.	0 - 7500 ft.	7501- 10,000 ft.	7501- 10,000 ft.	
045	**14A47**	**14A50**	**11K51**	**77W09**	**73W37**	**11K46**	**15Y66 (2-inch)**
070	**14A55**	**14A56**	**11K51**	**77W09**	**73W37**	**11K46**	**15Y66 (2-inch)**
090	**14A54**	**14A53**	**11K51**	**77W09**	**73W37**	**11K46**	**15Y66 (2-inch)**
110	**14A46**	**14A51**	**11K51**	**77W09**	**73W37**	**11K46**	[1] **15Y66 (2-inch)** **16A56 (3-inch)**

[1] Two-inch diameter muffler (**15Y66**) is optional for 110 input model with a maximum vent pipe length of up to 29 ft.
Three-inch diameter muffler (**16A56**) is optional for 110 input model with a minimum vent pipe length of 30 ft.

REFRIGERANT DETECTION SYSTEM (RDS) COMPONENTS

Description		Order No.
Refrigerant Detection System (RDS) Coil Sensor Kit		**26Z69**
Refrigerant Detection System (RDS) Blower Control Board	Any Lennox® Communicating Furnace or any Non-Communicating 24V Furnace (Universal)	**27A03**
	Any Non-Communicating 24V Furnace	**27A02**

NOTE - Communicating Blower Control Board and Sensor can be used universally with Lennox® communicating furnace or any non-communicating 24 volt furnace.
Non-Communicating Blower Control Board and Sensor can be used with any non-communicating 24 volt furnace.

HIGH ALTITUDE DERATE

NOTE - Units may be installed at altitudes up to 10,000 ft.
At altitudes above 4501 ft. the unit must be derated to match the manifold pressure information shown below.
Units installed at altitudes of 4501 to 10,000 ft. require a pressure switch change.
Units installed at altitudes of 7501 to 10,000 ft. require an orifice change.
See the Gas Heat Accessories table for ordering information.

NOTE - This is the only permissible derate for these units.

NOTE - In Canada, certification for installations at elevations over 4500 feet is the jurisdiction of local authorities.

Input	Gas	Manifold Pressure in. w.g.										Supply Line Pressure in. w.g. 0 - 10,000 ft.	
		0 - 4500 ft.		4501 - 5500 ft.		5501 - 6500 ft.		6501 - 7500 ft.		7501 - 10,000 ft.			
		Low Fire	High Fire	Low Fire	High Fire	Low Fire	High Fire	Low Fire	High Fire	Low Fire	High Fire	Min.	Max.
All Sizes	Natural	1.7	3.5	1.6	3.3	1.5	3.2	1.5	3.1	1.7	3.5	4.5	13.0
	LPG/Propane	4.5	10.0	4.2	9.4	4.0	9.1	3.9	8.9	4.5	10.0	11.0	13.0

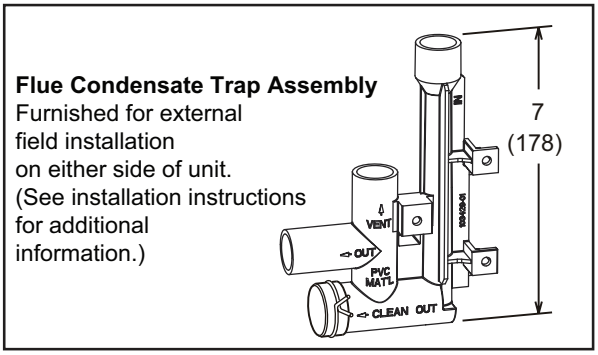

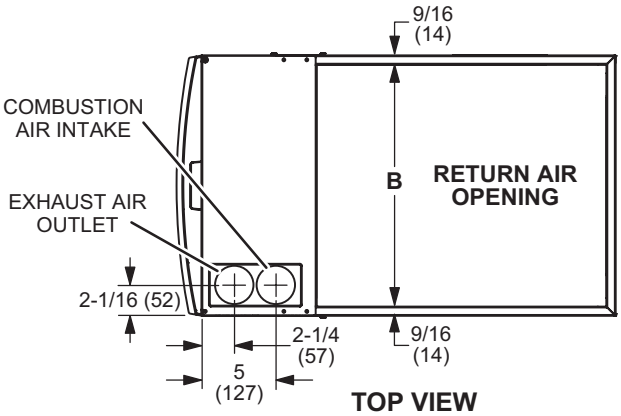

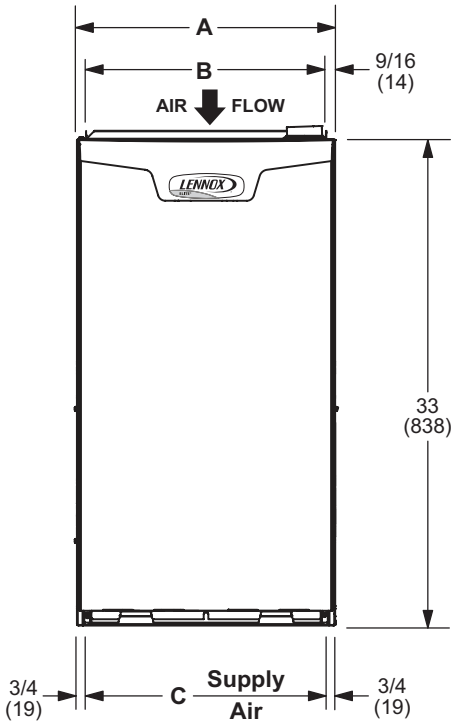

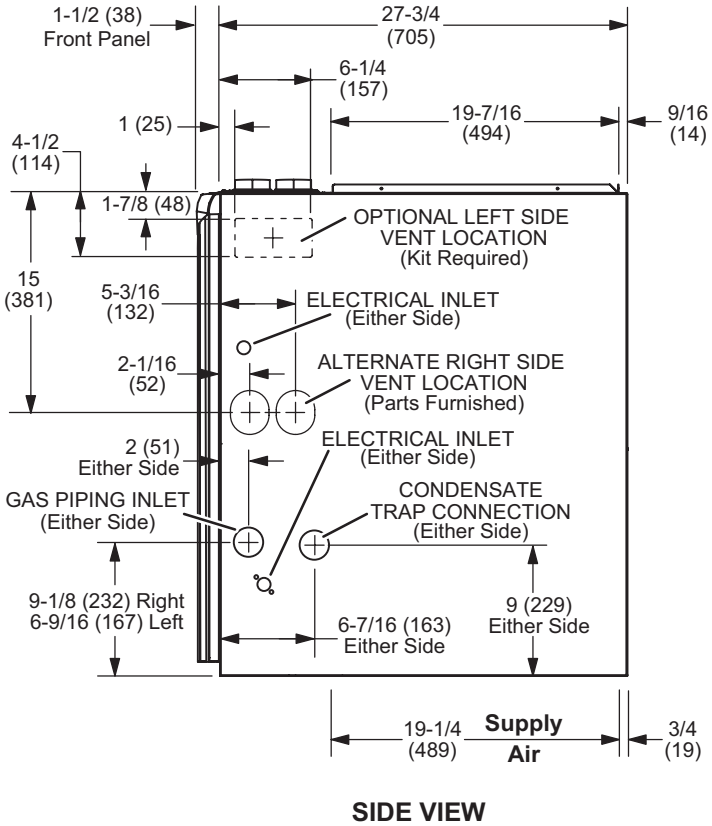

Model No.	A		B		C	
	in.	mm	in.	mm	in.	mm
EL296DF045XV36B EL296DF070XV48B	17-1/2	446	16-3/8	416	16	406
EL296DF090XV60C EL296DF110XV60C	21	533	19-7/8	505	19-1/2	495

DOWNFLOW FILTER CABINET

"B AND "C" WIDTH FURNACES
(Two Filters)

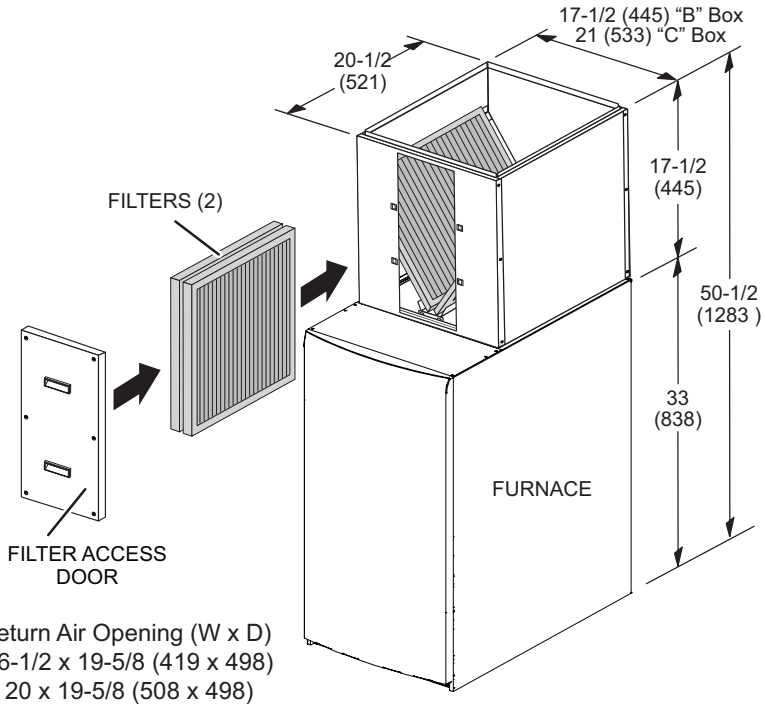

NOTE: Return Air Opening (W x D)
"B" Box 16-1/2 x 19-5/8 (419 x 498)
"C" Box 20 x 19-5/8 (508 x 498)

DOWNFLOW COMBUSTIBLE FLOORING BASE

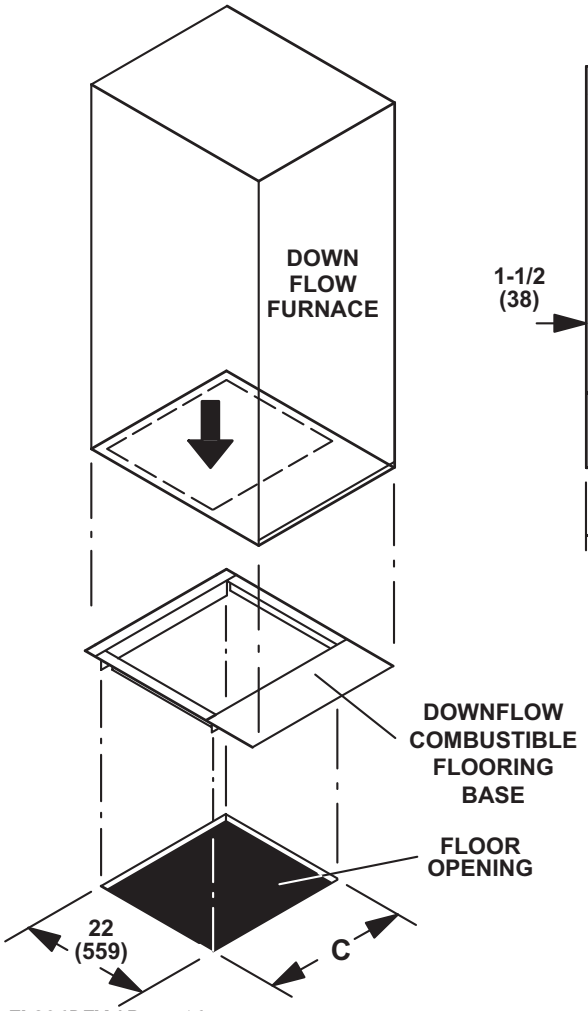

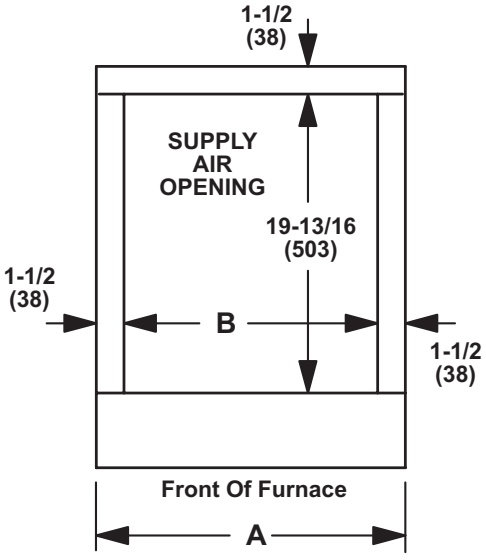

TOP VIEW

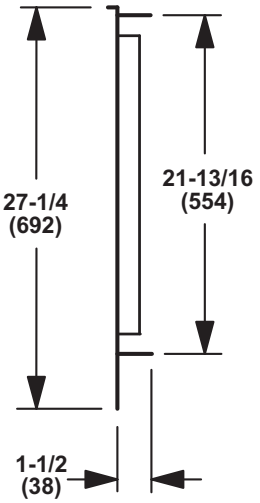

SIDE VIEW

Cabinet Width	Catalog Number	A		B		C	
		in.	mm	in.	mm	in.	mm
B	11M60	19-9/16	497	16-9/16	421	18-3/4	476
C	11M61	23-1/16	586	20-1/16	510	22-1/4	565

FLUSH-MOUNT VENT TERMINATION KIT 51W11 (US) or 51W12 (CANADA)

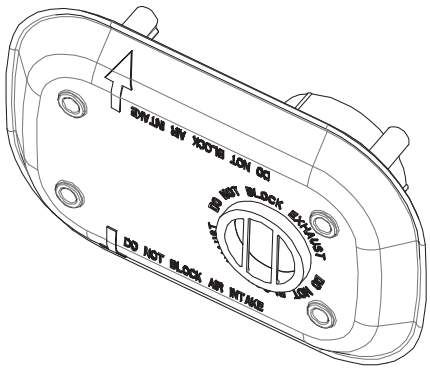

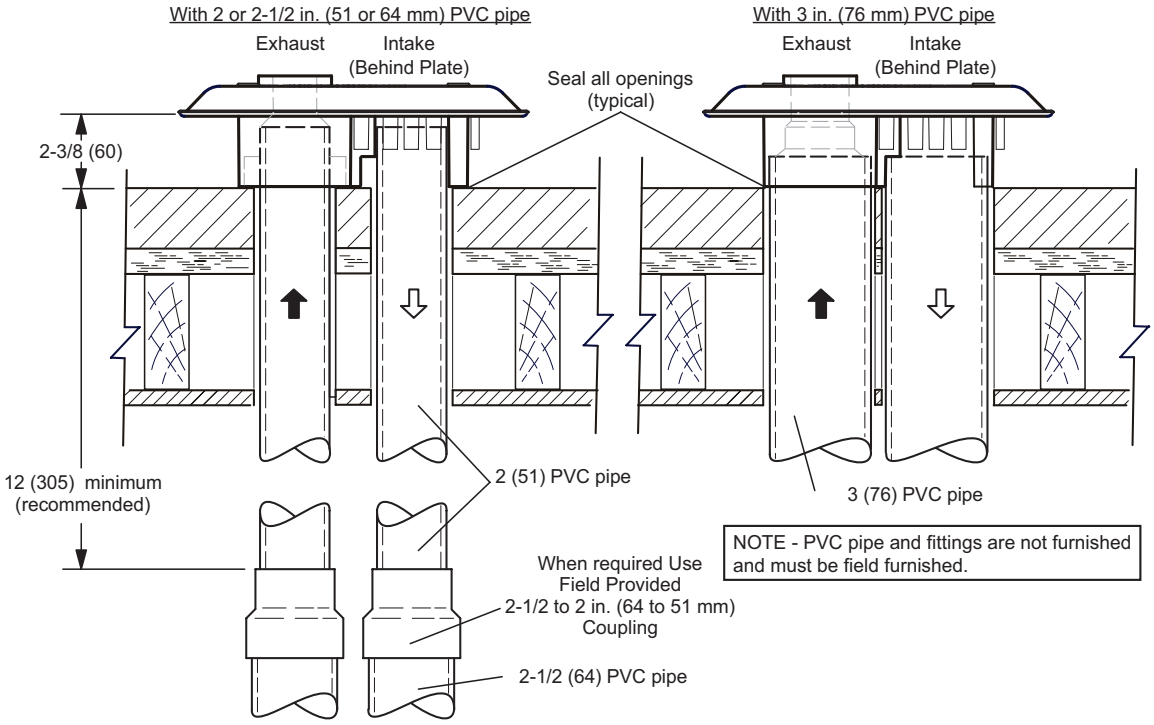

NOTE - PVC pipe and fittings are not furnished and must be field furnished.

MUFFLERS
15Y66 - 2-inch
16A56 - 3-inch

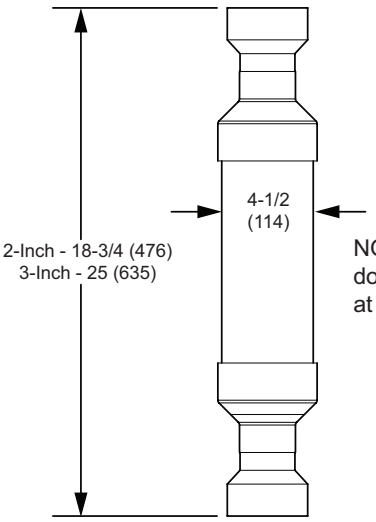

(Installed Vertically in the Exhaust Pipe)

NOTE - Two-inch mufflers do not have reducers at each end.

CONCENTRIC WALL TERMINATION APPLICATIONS

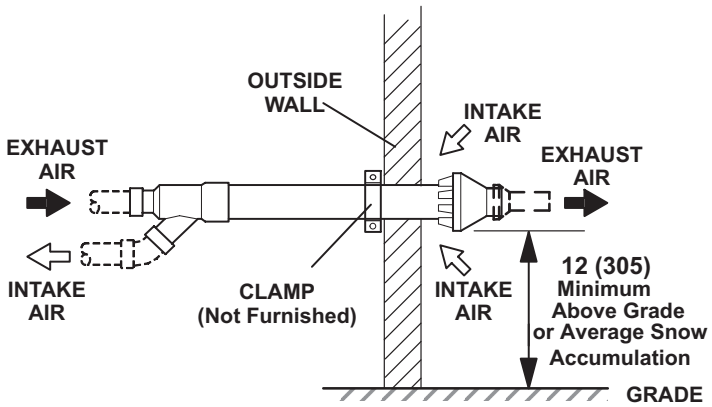

CONCENTRIC ROOF TERMINATION APPLICATIONS

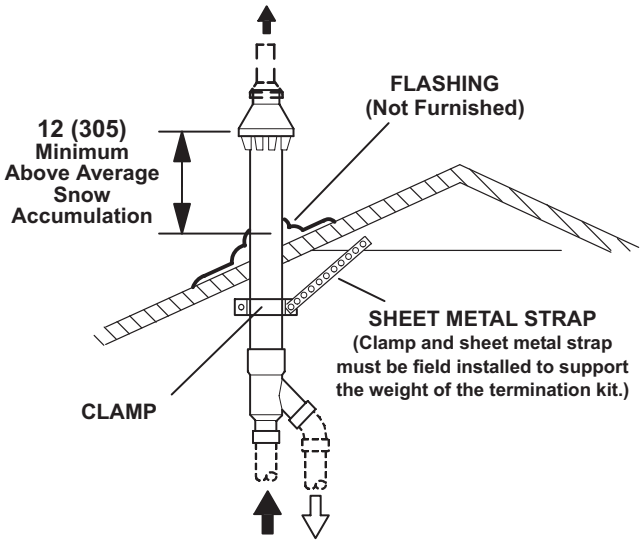

71M80 / 69M29 / 44W92 − 2 inch kits
60L46 / 44W93 − 3 inch kits
See Installation Instructions for additional information.

Note - Field provided reducer may be required to adapt different vent pipe sizes to termination.

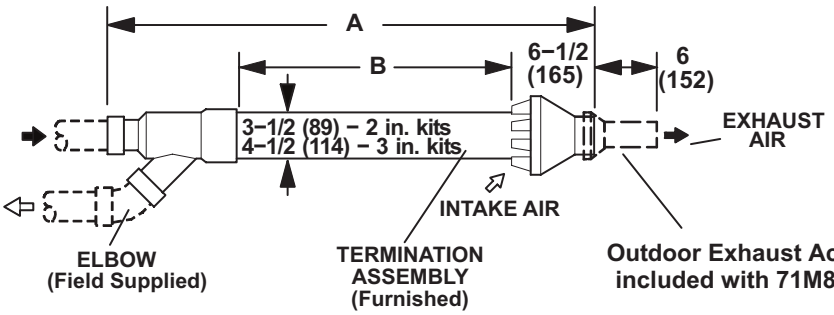

Cat. No.	A		B	
	in.	mm	in.	mm
71M80 69M29	33−3/8	848	16−3/4	425
44W92 (Canada)	29	737	15−1/2	394
60L46	38−7/8	987	21−3/16	538
44W93 (Canada)	36−1/8	918	19−1/2	495

NOTE − Typical illustration for dimensions only. Design may vary depending on kit ordered.

WALL TERMINATION KITS (CLOSE-COUPLE)
EXTENDED VENT FOR GRADE CLEARANCE
2 inch (51 mm) 22G44 (US)
3 inch (76 mm) 44J40 (US)
See Installation Instructions for additional information.

Note - Field provided reducer may be required to adapt different vent pipe sizes to termination.

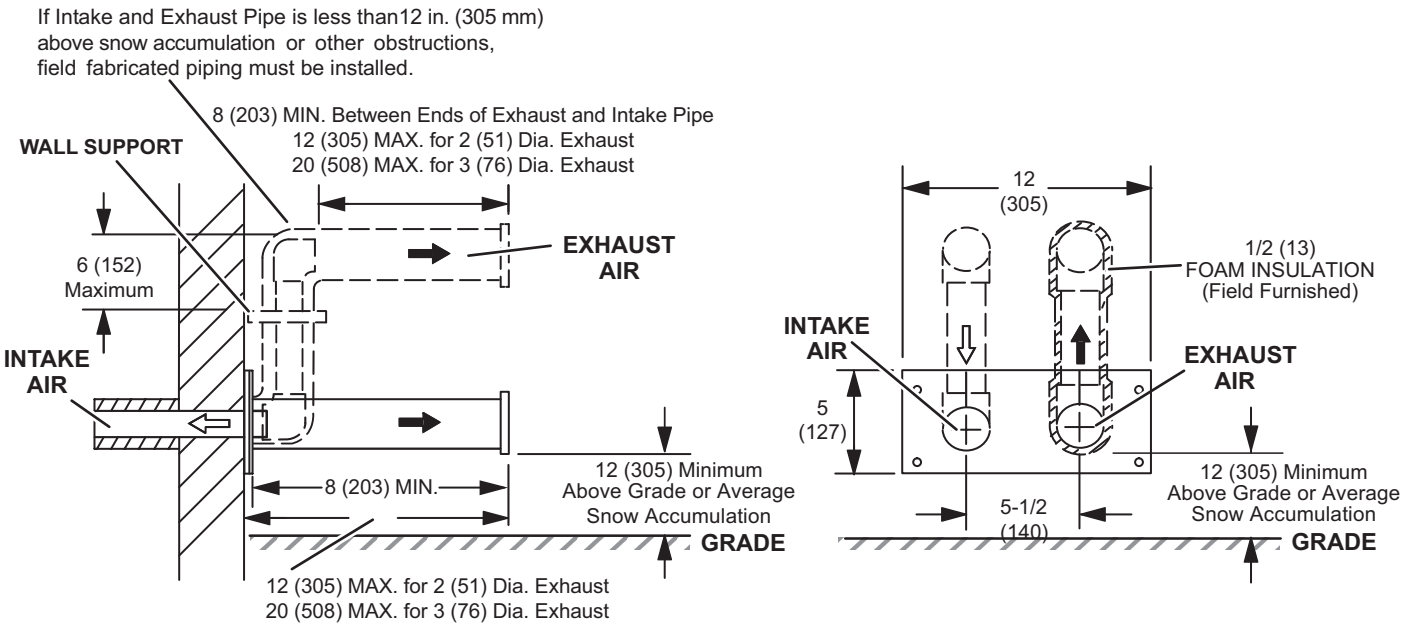

WALL TERMINATION KITS (CLOSE-COUPLE)
EXTENDED VENT FOR GRADE CLEARANCE
2 inch (51 mm) 30G28 (WTK Canada)
3 inch (76 mm) 81J20 (WTK Canada)
See Installation Instructions for additional information.

Note - Field provided reducer may be required to adapt different vent pipe sizes to termination.

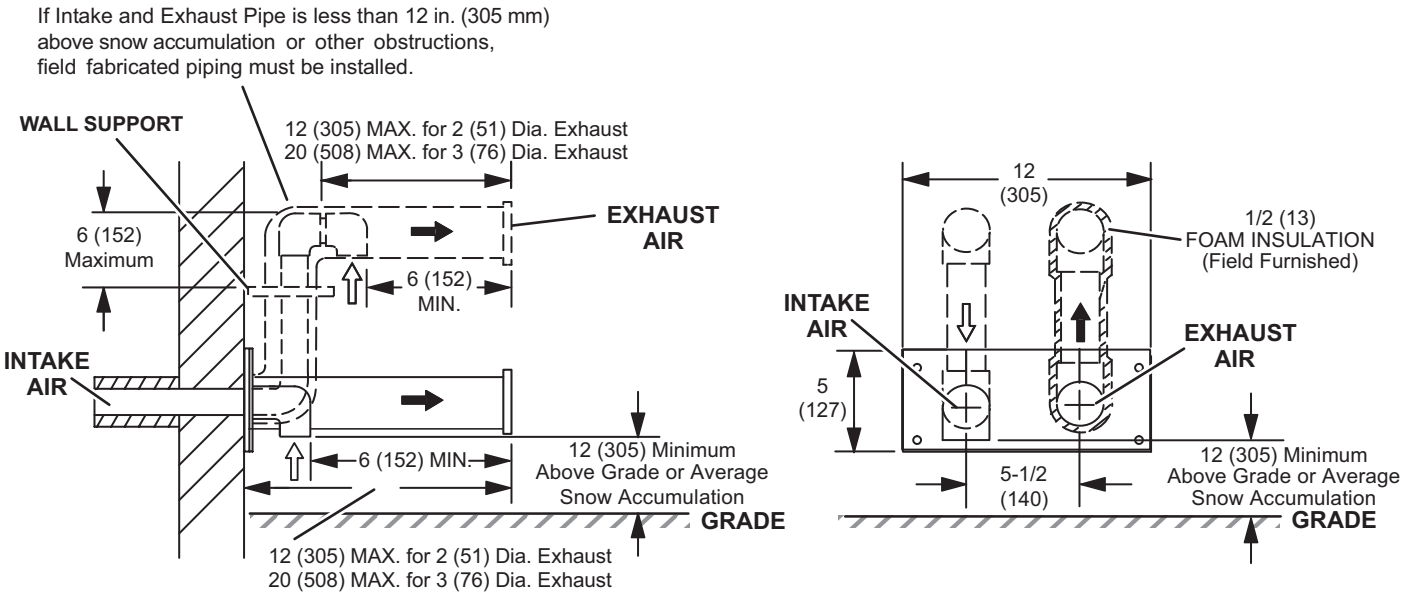

Model		Coil/Furnace Width		Coil Height		Overall Height	
CK40DT	**CRX35**	**in.**	**mm**	**in.**	**mm**	**in.**	**mm**
CK40DT-24B	CRX35-24B	17-1/2	445	18	457	51	1295
CK40DT-30/36B	CRX35-30/36B	17-1/2	445	23-1/2	597	56-1/2	1435
CK40DT-30/36C	CRX35-30/36C	21	533	23-1/2	597	56-1/2	1435
CK40DT-42B	CRX35-42B	17-1/2	445	23-1/2	597	56-1/2	1435
CK40DT-48C	CRX35-48C	21	533	27-1/2	699	60-1/2	1537
CK40CT-50/60C	CRX35-50/60C	21	533	27-1/2	699	60-1/2	1537

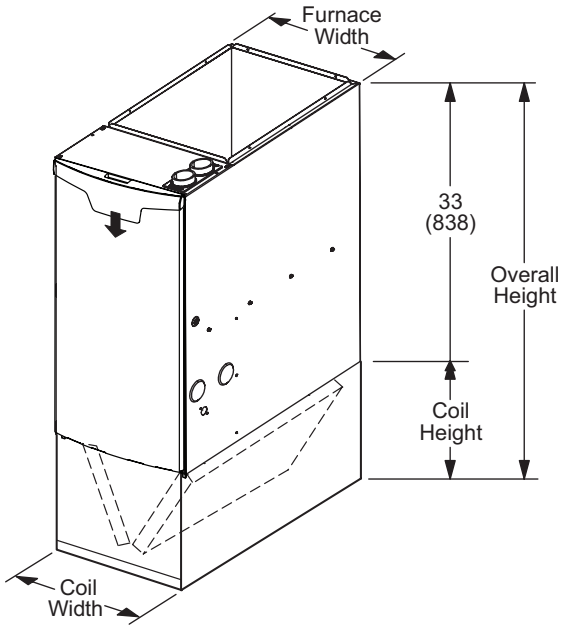

BLOWER DATA

EL296DF045XV36B BLOWER PERFORMANCE (less filter)

BOTTOM RETURN AIR

0 through 0.8 in. w.g. (Heating) and 0 through 1.0 in. w.g. (Cooling) External Static Pressure Range

HEATING		
[1] Heating Speed DIP Switch Settings	First Stage Heating Speed - cfm	Second Stage Heating Speed - cfm
+24%	910	1150
+18%	855	1095
+12%	820	1040
+6%	770	990
Factory Default	745	935
–6%	700	880
–12%	665	820
–18%	635	755

COOLING								
[1] Cooling Speed DIP Switch Settings	First Stage Cooling Speed - cfm				Second Stage Cooling Speed - cfm			
	Low	Medium-Low	Medium-High	[2] High	Low	Medium-Low	Medium-High	[2] High
+	640	755	850	975	895	1050	1210	1360
Factory Default	580	695	780	880	805	965	1105	1250
–	545	645	720	795	735	865	1000	1130

[1] Cooling and heating speeds are based on a combination of DIP switch settings on the furnace control. Refer to Installation Instructions for specific DIP Switch Settings.

[2] Factory default setting.

NOTES - The effect of static pressure is included in air volumes shown.
First stage HEAT is approximately 91% of the same second stage HEAT.
First stage COOL (two-stage air conditioning units only) is approximately 70% of the same second stage COOL speed position.
Continuous Fan Only speed is selectable at 28% and 38% of the selected second stage cooling speed - minimum 250 cfm.
Lennox® Smart Zoning System Applications - Minimum blower speed is 250 cfm.

EL296DF045XV36B BLOWER MOTOR WATTS (COOLING)

[1] Cooling Speed DIP Switch Settings		Motor Watts @ Various External Static Pressures - in. wg.																			
		First Stage									Second Stage										
		0	0.1	0.2	0.3	0.4	0.5	0.6	0.7	0.8	0	0.1	0.2	0.3	0.4	0.5	0.6	0.7	0.8	0.9	1.0
+ Setting																					
Cooling Speed	Low	28	44	60	77	93	112	128	144	158	59	77	97	121	138	160	182	197	216	241	256
	Med-low	47	67	88	105	121	138	161	179	201	131	154	177	202	228	250	277	299	320	344	370
	Med-High	69	91	113	132	160	183	204	220	246	199	215	248	275	308	340	360	390	407	431	445
	High	100	117	153	172	192	215	240	260	286	292	313	363	379	419	452	488	511	526	523	524
Factory Default																					
Cooling Speed	Low	17	34	52	65	82	97	121	132	148	61	79	98	125	141	164	185	201	219	246	259
	Med-low	35	50	70	85	105	125	140	155	175	99	115	148	167	188	211	236	256	279	303	317
	Med-High	54	72	95	113	131	148	173	189	210	147	170	197	223	252	278	301	330	355	373	398
	High	74	96	118	141	168	190	212	233	252	216	229	258	303	325	356	390	410	426	448	465
– Setting																					
Cooling Speed	Low	17	31	49	61	75	91	107	123	136	46	64	82	101	115	134	155	174	196	205	221
	Med-low	28	45	61	77	93	112	129	144	159	72	92	114	133	160	184	204	221	247	263	282
	Med-High	40	57	77	93	112	130	148	165	186	112	130	161	183	205	226	252	272	294	319	341
	High	57	76	97	119	136	156	179	195	214	155	174	207	235	265	292	311	343	370	386	414

BLOWER DATA

EL296DF070XV48B BLOWER PERFORMANCE (less filter)

BOTTOM RETURN AIR

0 through 0.8 in. w.g. (Heating) and 0 through 1.0 in. w.g. (Cooling) External Static Pressure Range

HEATING		
[1] Heating Speed DIP Switch Settings	First Stage Heating Speed - cfm	Second Stage Heating Speed - cfm
+24%	1085	1635
+18%	1030	1525
+12%	950	1450
+6%	910	1365
Factory Default	850	1310
–6%	790	1225
–12%	740	1135
–18%	680	1060

COOLING								
[1] Cooling Speed DIP Switch Settings	First Stage Cooling Speed - cfm				Second Stage Cooling Speed - cfm			
	Low	Medium-Low	Medium-High	[2] High	Low	Medium-Low	Medium-High	[2] High
+	740	915	1055	1255	1110	1340	1575	1800
Factory Default	660	820	940	1120	995	1230	1420	1650
–	575	735	850	995	880	1085	1290	1460

[1] Cooling and heating speeds are based on a combination of DIP switch settings on the furnace control. Refer to Installation Instructions for specific DIP Switch Settings.

[2] Factory default setting.

NOTES - The effect of static pressure is included in air volumes shown.
First stage HEAT is approximately 91% of the same second stage HEAT.
First stage COOL (two-stage air conditioning units only) is approximately 70% of the same second stage COOL speed position.
Continuous Fan Only speed is selectable at 28% and 38% of the selected second stage cooling speed - minimum 380 cfm.
Lennox® Smart Zoning System Applications - Minimum blower speed is 380 cfm.

EL296DF070XV48B BLOWER MOTOR WATTS (COOLING)

[1] Cooling Speed DIP Switch Settings		Motor Watts @ Various External Static Pressures - in. wg.																			
		First Stage									Second Stage										
		0	0.1	0.2	0.3	0.4	0.5	0.6	0.7	0.8	0	0.1	0.2	0.3	0.4	0.5	0.6	0.7	0.8	0.9	1.0
+ Setting																					
Cooling Speed	Low	68	88	109	132	154	178	199	213	238	144	169	208	244	270	310	343	378	401	432	457
	Med-low	93	120	147	172	198	220	254	274	304	257	276	326	370	398	437	470	492	531	558	598
	Med-High	120	152	180	220	254	281	318	344	380	390	428	472	526	574	611	659	706	745	788	820
	High	214	237	284	324	352	390	424	456	474	627	604	663	721	775	825	869	908	915	881	864
Factory Default																					
Cooling Speed	Low	35	54	74	92	109	129	147	163	191	104	137	162	189	219	254	278	312	341	369	400
	Med-low	75	100	115	140	165	190	210	230	255	188	203	250	297	327	374	399	432	454	486	513
	Med-High	99	129	159	179	209	236	270	293	329	304	340	376	418	450	495	533	567	613	637	674
	High	157	184	232	264	285	335	365	406	419	454	469	537	589	634	669	724	770	818	833	840
– Setting																					
Cooling Speed	Low	27	49	63	73	98	116	135	155	168	86	111	135	162	186	206	236	257	283	306	339
	Med-low	67	87	109	132	154	177	199	212	238	129	156	187	226	258	288	325	353	385	409	441
	Med-High	82	105	127	153	176	196	223	243	269	226	244	290	335	364	402	435	465	485	516	556
	High	107	141	164	195	224	263	282	321	347	329	375	403	444	481	526	570	612	656	680	718

BLOWER DATA

EL296DF090XV60C BLOWER PERFORMANCE (less filter)

BOTTOM RETURN AIR

0 through 0.8 in. w.g. (Heating) and 0 through 1.0 in. w.g. (Cooling) External Static Pressure Range

HEATING		
[1] Heating Speed DIP Switch Settings	First Stage Heating Speed - cfm	Second Stage Heating Speed - cfm
+24%	1425	1895
+18%	1355	1825
+12%	1280	1740
+6%	1215	1660
Factory Default	1160	1575
–6%	1055	1455
–12%	1010	1365
–18%	950	1265

COOLING								
[1] Cooling Speed DIP Switch Settings	First Stage Cooling Speed - cfm				Second Stage Cooling Speed - cfm			
	Low	Medium-Low	Medium-High	[2] High	Low	Medium-Low	Medium-High	[2] High
+	1115	1265	1400	1600	1600	1750	1970	2130
Factory Default	1005	1150	1275	1450	1450	1630	1810	1975
–	890	1065	1150	1270	1270	1450	1645	1810

[1] Cooling and heating speeds are based on a combination of DIP switch settings on the furnace control. Refer to Installation Instructions for specific DIP Switch Settings.

[2] Factory default setting.

NOTES - The effect of static pressure is included in air volumes shown.
First stage HEAT is approximately 91% of the same second stage HEAT.
First stage COOL (two-stage air conditioning units only) is approximately 70% of the same second stage COOL speed position.
Continuous Fan Only speed is selectable at 28% and 38% of the selected second stage cooling speed - minimum 450 cfm.
Lennox® Smart Zoning System Applications - Minimum blower speed is 450 cfm.

EL296DF090XV60C BLOWER MOTOR WATTS (COOLING)

[1] Cooling Speed DIP Switch Settings		Motor Watts @ Various External Static Pressures - in. wg.																			
		First Stage									Second Stage										
		0	0.1	0.2	0.3	0.4	0.5	0.6	0.7	0.8	0	0.1	0.2	0.3	0.4	0.5	0.6	0.7	0.8	0.9	1.0
+ Setting																					
Cooling Speed	Low	79	108	144	162	207	242	262	293	323	275	299	366	399	449	483	532	584	605	644	680
	Med-low	120	156	187	233	261	279	329	368	401	387	409	471	521	562	606	650	688	716	762	800
	Med-High	155	202	235	293	317	369	407	453	502	547	577	622	667	744	795	835	872	910	950	963
	High	268	299	366	399	449	483	532	584	605	780	775	811	898	942	994	1048	1071	1082	1080	1073
Factory Default																					
Cooling Speed	Low	56	86	111	140	170	200	232	259	282	186	219	270	308	361	390	431	489	517	555	590
	Med-low	93	118	152	195	223	254	283	306	344	278	304	365	420	450	510	544	592	640	665	698
	Med-High	123	161	201	228	260	310	341	381	416	446	475	528	582	616	662	686	747	780	823	855
	High	182	219	270	308	361	390	431	489	517	576	603	654	704	756	809	871	902	939	972	975
– Setting																					
Cooling Speed	Low	48	69	101	120	152	175	201	218	249	118	155	181	232	259	299	340	376	402	438	476
	Med-low	65	94	123	150	185	220	250	278	296	177	205	267	304	353	390	430	486	515	563	587
	Med-High	93	118	152	195	223	254	283	306	344	301	322	392	439	468	531	568	599	647	678	721
	High	116	155	181	232	259	299	340	376	402	446	475	528	582	616	662	686	747	780	823	855

BLOWER DATA

EL296DF110XV60C BLOWER PERFORMANCE (less filter)

BOTTOM RETURN AIR

0 through 0.8 in. w.g. (Heating) and 0 through 1.0 in. w.g. (Cooling) External Static Pressure Range

HEATING		
[1] Heating Speed DIP Switch Settings	First Stage Heating Speed - cfm	Second Stage Heating Speed - cfm
+24%	1535	2015
+18%	1445	1935
+12%	1370	1855
+6%	1300	1760
Factory Default	1220	1645
–6%	1135	1545
–12%	1070	1420
–18%	1000	1335

COOLING								
[1] Cooling Speed DIP Switch Settings	First Stage Cooling Speed - cfm				Second Stage Cooling Speed - cfm			
	Low	Medium-Low	Medium-High	[2] High	Low	Medium-Low	Medium-High	[2] High
+	1095	1265	1395	1585	1585	1790	1990	2180
Factory Default	965	1130	1285	1440	1440	1630	1845	2005
–	860	1035	1130	1275	1275	1475	1655	1845

[1] Cooling and heating speeds are based on a combination of DIP switch settings on the furnace control. Refer to Installation Instructions for specific DIP Switch Settings.

[2] Factory default setting.

NOTES - The effect of static pressure is included in air volumes shown.
First stage HEAT is approximately 91% of the same second stage HEAT.
First stage COOL (two-stage air conditioning units only) is approximately 70% of the same second stage COOL speed position.
Continuous Fan Only speed is selectable at 28% and 38% of the selected second stage cooling speed - minimum 450 cfm.
Lennox® Smart Zoning System Applications - Minimum blower speed is 450 cfm.

EL296DF110XV60C BLOWER MOTOR WATTS (COOLING)

[1] Cooling Speed DIP Switch Settings		Motor Watts @ Various External Static Pressures - in. wg.																			
		First Stage									Second Stage										
		0	0.1	0.2	0.3	0.4	0.5	0.6	0.7	0.8	0	0.1	0.2	0.3	0.4	0.5	0.6	0.7	0.8	0.9	1.0
+ Setting																					
Cooling Speed	Low	71	99	147	166	202	240	271	302	337	248	280	333	374	429	469	511	548	594	619	677
	Med-low	127	159	198	225	256	301	325	365	390	409	427	496	531	587	632	665	721	742	781	805
	Med-High	162	204	242	287	316	371	408	446	487	563	589	651	703	755	808	860	888	932	970	1007
	High	243	280	333	374	429	469	511	548	594	866	850	915	963	1020	1056	1091	1127	1141	1136	1131
Factory Default																					
Cooling Speed	Low	57	88	117	140	165	196	232	259	283	167	214	244	291	331	380	405	467	497	539	583
	Med-low	77	112	147	172	209	250	283	317	345	275	321	348	418	447	505	546	597	632	668	716
	Med-High	122	154	199	230	268	300	331	373	411	461	493	547	572	628	666	703	745	777	819	860
	High	167	214	244	291	331	380	405	467	497	601	626	688	730	787	823	880	924	963	994	1011
– Setting																					
Cooling Speed	Low	44	67	99	115	144	167	197	215	245	126	165	201	232	262	305	334	373	417	451	479
	Med-low	66	97	123	153	186	216	247	275	303	187	219	272	308	360	391	432	479	514	559	588
	Med-High	77	112	147	172	209	250	283	317	345	308	341	390	430	490	528	569	617	640	691	724
	High	127	165	201	232	262	305	334	373	417	461	493	547	572	628	666	703	745	777	819	860

REVISIONS

Sections	Description of Change
Dimensions	Updated Furnace/Coil Combined Dimension data for new CK40 coils.
Override Accessories	Added Refrigerant Detection System (RDS) Components.

Visit us at www.Lennox.com
For the latest technical information, www.LennoxPros.com
Contact us at 1-800-9-LENNOX

NOTE - Due to Lennox' ongoing commitment to quality, Specifications, Ratings and Dimensions subject to change without notice and without incurring liability.
Improper installation, adjustment, alteration, service or maintenance can cause property damage or personal injury.
Installation and service must be performed by a qualified installer and servicing agency.

©2024 Lennox Industries, Inc.