5-3/4"wide x 6-5/16" tall

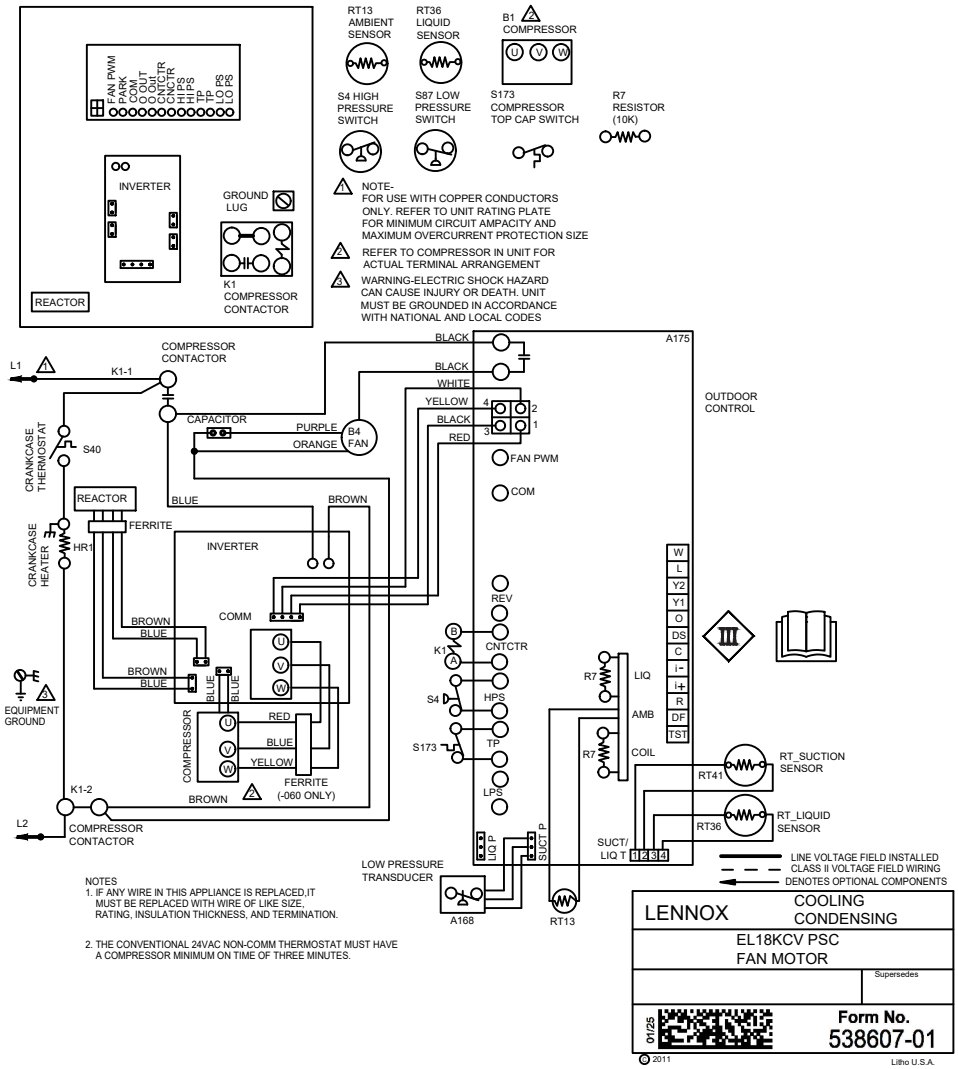

NOTES
1. IF ANY WIRE IN THIS APPLIANCE IS REPLACED,IT MUST BE REPLACED WITH WIRE OF LIKE SIZE, RATING, INSULATION THICKNESS, AND TERMINATION.

2. THE CONVENTIONAL 24VAC NON-COMM THERMOSTAT MUST HAVE A COMPRESSOR MINIMUM ON TIME OF THREE MINUTES.

LENNOX

COOLING CONDENSING

EL18KCV PSC FAN MOTOR

Supersedes

01/25

Form No. 538607-01

© 2011

Litho U.S.A.