PACKAGED GAS / ELECTRIC

LRP13GEK / LRP13GXK

MERIT® SERIES

Constant Torque Blower | Single-Phase | R-454B | 60Hz

RESIDENTIAL
PRODUCT SPECIFICATIONS (EHB)

SEER2 - 13.4
AFUE - 81%
2 to 5 Tons
Cooling Capacity - 22,600 to 57,000 Btuh
Input Gas Heating Capacity - 54,000 to 126,000 Btuh

MERIT® SERIES

MODEL NUMBER IDENTIFICATION

L RP 13 GE K 36 - 090 E P - 1 - A

Brand
L = Lennox

Product Type
RP = Residential Packaged Unit

Nominal SEER2

Unit Type
GE = Gas/Electric Unit
GX = Low NOx Gas/Electric Unit

Refrigerant Type
K = R-454B

Nominal Cooling Capacity
24 = 2 tons
30 = 2.5 tons
36 = 3 tons
42 = 3.5 tons
48 = 4 tons
60 = 5 tons

Nominal Heating Capacity Input
054 = 54,000 Btuh
072 = 72,000 Btuh
090 = 90,000 Btuh
108 = 108,000 Btuh
126 = 126,000 Btuh

Blower
E = High Efficiency Constant Torque Blower Motor

Voltage
P = 208/230V-1phase-60Hz

Major Revision Sequence
1 = 1st Generation

Minor Revision Sequence
A = 1st Generation

Form Number 211091 | April 2026
Supersedes all previous versions

CONTENTS

Approvals And Warranty 2
Control Options 6
Cooling Ratings 10
Dimensions 13
- Unit 13
- Accessories 14
Electrical Data 7
Features 3
Field Wiring 9
High Altitude Derate 9
Installation Clearances 9
Minimum Clearance To Combustible Material 9
Optional Accessories - Order Separately 8
Specifications 7
Specifications - Gas Heat 9

APPROVALS AND WARRANTY

APPROVALS

- AHRI Standard 210/240-2023 Certified
- Design Certified by ETL Intertek
- Cooling system rated according to DOE test procedures
- Heating ratings are Certified by AHRI according to U.S. Department of Energy (DOE) test procedures and Federal Trade Commission (FTC) labeling regulations
- All models meet UL 60335-2-40 Refrigerant Detector Requirements
- Units are ETL Certified for the U.S. and Canada
- All models with the Optional Seismic Strapping Kit installed have Seismic Certification for 2018 International Building Code (IBC) and 2019 California Building Code (CBC) ASCE 7
- Unit and components are UL bonded for grounding to meet safety standards for servicing
- Test operated at the factory before shipment ensuring dependable operation at start-up

California Only

- These units **do not meet** the South Coast Air Quality Management District (SCAQMD) Rule 1111 and San Joaquin Valley Air Pollution Control District (SJVAPCD) Rule 4905 NOx emission limit (14 ng/J) and cannot be installed within the SCAQMD, SJVAPCD and Bay Area
- These units are approved by the California Energy Commission and meets California Nitrogen Oxides Standard (NOx) limits of 40 ng/J

WARRANTY

- Heat Exchanger:
  - Limited twenty years in residential applications
  - Limited ten years in non-residential applications
- Compressor:
  - Limited ten years in residential installations
  - Limited five years in non-residential installations
- All other covered components:
  - Limited five years in residential installations
  - Limited one year in non-residential installations

NOTE - Refer to Lennox Equipment Limited Warranty certificate included with unit for specific details.

FEATURES

APPLICATIONS

- Designed for outdoor installations at ground level or rooftop for residential applications

HEATING SYSTEM

Heat Exchanger
- Aluminized tubular steel for superior resistance to corrosion and oxidation
- Round surfaces create minimum air resistance and allow air to surround all surfaces for excellent heat transfer
- Compact design reduces space requirements in unit cabinet
- Laboratory life cycle tested

Inshot Burners
- Aluminized steel inshot burners provide efficient trouble free operation
- Burner venturi mixes air and gas in correct proportion for proper combustion
- Burner assembly is removable from the unit as a single component for ease of service
- Each burner may be removed individually

Gas Control Valve
- 24 volt redundant combination gas control valve combines manual shut off valve (On-Off), automatic electric valve (dual) and gas pressure regulation into a compact combination control

Combustion Air Inducer
- Heavy duty combustion air inducer prepurges heat exchanger and safely vents flue products
- Blower is controlled by the ignition control board
- Pressure switch proves blower operation before allowing gas valve to open
- Combustion air inducer operates during heating cycle
- Inducer operates for the first 10 seconds of each cooling cycle to prevent insects from nesting in the flue outlet during cooling season

Limit Control
- Factory installed behind heat exchanger access panel
- Automatic reset

Flame Rollout Switch
- Factory installed on burner box
- Provides protection from abnormal operating conditions
- Manual reset

Ignition Control Board
- Ignition control board with LED diagnostics

Optional Accessories

LPG/Propane Conversion Kit
- Required for field changeover from natural gas to LPG/Propane

COOLING SYSTEM

R-454B Refrigerant
- Low GWP (Global Warming Potential)
- Zero ODP (Ozone Depletion Potential)
- Low Toxicity/Lower Flammability - A2L
- Unit is factory pre-charged

Evaporator and Condenser Coils
- Copper tube with aluminum fin coils

Anti-Microbial Evaporator Coil Drain Pan
- Anti-Microbial additive resists growth of mold and mildew on drain pan which improves indoor air quality and reduces drain line blockage
- Fully insulated to reduce condensation
- Drain pan overflow switch monitors condensate level in drain pan and shuts down unit if drain becomes clogged

Condenser Fan
- Weather protected heavy duty condenser fan motor
- Coated steel fan blades for long life
- Corrosion-resistant coated steel fan guard
- Internally mounted
- Totally enclosed fan motor

High Pressure Switch
- Protects the system from high pressure conditions
- Automatic reset.

Loss of Charge Switch
- Protects compressor from damage from low/no refrigerant charge conditions
- SPST, normally-closed
- Automatic reset

Service Valves
- Fully serviceable brass valves installed in discharge and liquid lines

LOW GWP REFRIGERANT DETECTION SYSTEM (RDS)

- Complies with UL 60335-2-40 approved standard
- Required for all systems using R-454B refrigerant
- Factory installed on all units
- Consists of a leak detection sensor(s) and a mitigation control
- Ensures safe operation for systems equipped with R-454B refrigerant
- Sensor(s) monitors indoor coil area for any refrigerant leaks if they occur
- If a leak is detected the refrigerant detection system will prevent compressor and heating operation until a leak is no longer detected
- Refrigeration detection system energizes blower while a leak is detected to mitigate any concentrations of refrigerant from the unit and the system

FEATURES

COMPRESSOR

- Rotary Compressor furnished on 24 and 30 models
- Scroll Compressor furnished on 36 through 60 models
- High volumetric efficiency
- Uniform suction flow
- Constant discharge flow
- Quiet operation
- Low gas pulses during compression reduces operational sound levels
- Compressor motor is internally protected from excessive current and temperature
- Compressor is installed in the unit on resilient rubber mounts for vibration free operation

Optional Accessories

Compressor Crankcase Heater (36 through 60 models)
- Protects against refrigerant migration that can occur during low ambient operation

Compressor Hard Start Kit
- A PSC compressor motor does not normally need a potential relay and start capacitor
- In cases of low voltage, this kit may be required to increase the compressor starting torque

Compressor Timed-Off Control
- Prevents compressor short-cycling
- Allows time for suction and discharge pressure to equalize
- Permits compressor start-up in an unloaded condition
- Automatic reset
- Five minute delay between compressor shut-off and start-up

Low Ambient Kit (40°F)
- Cycles the outdoor fan while allowing compressor operation in the cooling cycle
- This intermittent fan operation allows the system to operate without icing the evaporator coil and losing capacity
- Designed for use in ambient temperatures no lower than 40°F

NOTE - A crankcase heater must be installed on the compressor.

SUPPLY AIR BLOWER

- Direct drive blower
- Blower wheel is statically and dynamically balanced
- Resiliently mounted
- Blower assembly easily removed for servicing

Constant Torque Blower Motor
- DC Brushless Motor
- High Efficiency Constant Torque
- ECM (Electronically Commutated Motor)
- Motor is programmed to provide constant torque at each of the selectable speeds
- Fixed blower “On” delay prevents cold air from entering system during gas heating demand
- See Blower Performance tables

AIR FILTER (required)

Internal Filter Rack Kits
- Available for 1 in. thick filters
- Filter rails mount internal to unit

NOTE - Filters must be field provided.

CONTROLS

Refrigerant Detection System (RDS) Control
- Monitors leak detection sensor
- Connections for external RDS alarm system (not furnished)
- LED for power, monitoring and sensor status
- Test/Reset button for troubleshooting

24 Volt Transformer
- 40VA transformer furnished and factory installed in control area

Optional Accessories

Thermostat
- Thermostat is not furnished with unit
- See Page 6

FEATURES

CABINET

- Conditioned areas insulated with foil faced insulation
- Minimizes heat loss and reduce operating sound levels
- Powder paint for maximum durability
- Easy service access
- Steel louvered panels provides complete coil protection
- Full perimeter heavy-gauge galvanized steel base rail
- Base rails have rigging holes
- Two sides of the base rail have forklift slots
- Raised edges around duct and power entry openings in the bottom of the unit for water protection

Airflow Choice

- Units are shipped with all air openings sealed
  - For downflow (vertical) applications, remove the downflow duct covers
  - For horizontal applications, remove the horizontal duct covers

Gas Piping Inlets, Electrical Inlets and Service Valves

- Standard gas piping and field wiring inlets are located in one central area of the cabinet
- See dimension drawing
- Gauge ports are located inside the cabinet

Optional Accessories

Base Rail Opening Closure Kit

- Kit consists of panels and hardware to cover base rail rigging holes and forklift slot openings

Bottom Gas Entry Kit

- Allows gas piping through the unit base pan

Bottom Power Entry Kit

- Allows field wiring through the unit base pan

Rectangular to Round Duct Adaptor Kits

- Downflow or horizontal kits available
- Converts rectangular supply and return air openings on unit cabinet to round diameter
- Several sizes available

Clip Curb (Full Perimeter)

- Interlocking tabs fasten corners together
- No tools required
- Fully gasketed around curb perimeter and supply and return openings
- Available in 8, 14, 18 and 24 inch heights
- Shipped knocked down

Adjustable Pitch Roof Curb (Full Perimeter)

- Fully adjustable pitch curb provides a level platform for packaged units
- Allows flexible installations on roofs with sloped or uneven angles
- Adjustable from 2/12 to 6/12 pitch
- Fully gasketed around curb perimeter and supply and return openings
- Clip Curb (knock-down) and Welded models available

All Curbs

- IBC 2018 compliant
- CBC 2019 compliant
- Seismic rating - SDS 2.0g, z/h=1, Ip=1.5
- Wind rating - 240 mph (Lateral), 214 mph (Uplift)
- Maximum load rating - 800 lbs.

Adaptor Curbs (not shown)

- Curbs are regionally sourced
- Dimensions vary based upon the source

NOTE - Contact your local sales representative for a detailed cut sheet with applicable dimensions.

Strapping Kit - Seismic

- Heavy-gauge galvanized steel
- Kit contains 4 brackets and mounting hardware

CONTROL OPTIONS

E40 Smart Wi-Fi Thermostat

- 3 Htg.-2 Clg.
- 7-day, universal, programmable, touchscreen thermostat
- Controls dehumidification during cooling mode and humidification during heating mode
- Smooth Setback Recovery and compressor short-cycle protection
- One-Touch Away Mode, Smart Away™ (geo-fencing), equipment maintenance reminders and scheduling
- Smart home automation compatible with Amazon Alexa®, Google Assistant, Control4®, Building36®, Matter and IFTTT
- Lennox® Home App controls temperature, fan operation, set programs/schedules and set Away mode on a smartphone
- Lennox Smart Tech App allows the installer to commission the system and remotely turn the system on and off during setup or service call on a smartphone

L40 Smart Wi-Fi Thermostat

- 2 Htg.-1 Clg.
- 7-day, universal, programmable, touchscreen thermostat
- Provides temperature control for gas, electric and heat pumps for single-stage heating or cooling systems (including dual-fuel operation)
- One-Touch Away Mode, Smart Away™ (geo-fencing), equipment maintenance reminders and scheduling
- Smooth Setback Recovery and compressor short-cycle protection
- Smart home automation compatible with Amazon Alexa®, Google Assistant, Control4®, Building36®, Matter and IFTTT
- Lennox® Home App controls temperature, fan operation, set programs/schedules and set Away mode on a smartphone
- Lennox Smart Tech App allows the installer to commission the system and remotely turn the system on and off during setup or service call on a smartphone

NOTE - Two-stage heating for Dual-Fuel Heat Pump applications only

M40 Smart Wi-Fi Thermostat

- 3 Htg.-2 Clg.
- 7-day, universal, programmable, touchscreen thermostat
- Smooth Setback Recovery and compressor short-cycle protection
- One-Touch Away Mode, Smart Away™ (geo-fencing), equipment maintenance reminders and scheduling
- Smart home automation compatible with Amazon Alexa®, Google Assistant, Control4®, Building36®, Matter and IFTTT
- Lennox® Home App controls temperature, fan operation, set programs/schedules and set Away mode on a smartphone
- Lennox Smart Tech App allows the installer to commission the system and remotely turn the system on and off during setup or service call on a smartphone

NOTE - Please refer to the individual Product Specifications for these products for full information.

CONTROLS - ORDERING

E40 Smart Wi-Fi Thermostat	3-3/8 x 5-3/8 x 1	**30L26**
Lennox® Smart Room Sensor	4 x 5-1/2 x 3	**22V25**
Lennox® Smart Air Quality Monitor	3-5/8 x 4-3/8 x 1-3/8	**21P02**
Lennox® Wireless Extender	4 x 5-1/2 x 2-1/2	**22V26**
L40 Smart Wi-Fi Thermostat	2-13/16 x 2-13/16 x 1/4	**27V51**
M40 Smart Wi-Fi Thermostat	3-5/16 x 4-5/16 x 7/8	**30L27**
Thermostat Accessories		
[1] Discharge Air Temperature Sensor (For E40)		**88K38**
[2] Remote Outdoor Air Temperature Sensor (For dual-fuel and Humiditrol®)		**X2658**

[1] Optional for service diagnostics (E40).

[2] Remote Outdoor Air Temperature Sensor is used with conventional (non-Lennox® Communicating) outdoor units (sensor is furnished with Lennox® Communicating outdoor units). Allows the thermostat to display outdoor temperature. Required in dual-fuel and Humiditrol® applications.

SPECIFICATIONS

Size		24	30	36	42	48	60
Nominal Tonnage		2	2.5	3	3.5	4	5
Cooling Performance	Total cooling capacity - Btuh	22,600	28,400	33,400	40,000	44,500	57,500
	[1] SEER2 (Btuh/Watt)	13.4	13.4	13.4	13.4	13.4	13.4
	[1] EER2 (Btuh/Watt)	10.6	10.6	10.6	10.6	10.6	10.6
[2] Sound Rating Number	dBA	77	79	78	78	77	78
Refrigerant	Type	R-454B	R-454B	R-454B	R-454B	R-454B	R-454B
	Charge	4 lbs. 6 oz.	4 lbs. 9 oz.	4 lbs. 8 oz.	5 lbs. 6 oz.	5 lbs. 5 oz.	7 lbs. 13 oz.
Compressor Type (number)		Rotary (1)	Rotary (1)	Scroll (1)	Scroll (1)	Scroll (1)	Scroll (1)
Outdoor Coil	Net face area - ft.^{2}	14.6	16.4	16.4	19.5	19.5	16.6
	Tube diameter - in.	5/16	5/16	5/16	5/16	5/16	5/16
	Rows	1	1	1	1	1	2
	Fins - in.	26	26	26	26	26	22
Outdoor Fan	HP	1/6	1/6	1/6	1/4	1/4	1/4
	Diameter - in.	22	22	22	24	24	24
	Blades	4	4	4	3	3	3
Indoor Coil	Net face area - ft.^{2}	4.4	4.4	4.4	6.8	6.8	6.8
	Tube diameter - in.	3/8	5/16	5/16	5/16	5/16	3/8
	Rows	2	3	3	3	3	3
	Fins - in.	16	16	15	15	15	15
	Condensate drain size (NPT) - in.	3/4	3/4	3/4	3/4	3/4	3/4
Indoor Blower	HP	1/3	1/2	1/2	3/4	3/4	1
	Wheel (Number) diameter x width - in.	(1) 10 x 6	(1) 10 x 6	(1) 10 x 8	(1) 10 x 10	(1) 10 x 10	(1) 12 x 9
Net weight of basic unit - lbs. (heat size)		388 (-054)	400 (-054)	419 (-072)	- - -	506 (-108)	543 (-108)
		394 (-072)	406 (-072)	425 (-090)	496 (-090)	543 (126)	549 (126)
Shipping weight of basic unit - lbs. (heat size)		403 (-054)	405 (-054)	424 (-072)	- - -	511 (-108)	548 (-108)
		399 (-072)	411 (-072)	430 (-090)	501 (-090)	548 (-126)	554 (-126)

ELECTRICAL DATA

	Line voltage data (Volts-Phase-Hz)	**208/230V-1-60**					
	[3] Maximum overcurrent protection (MOCP) amps	20	25	35	40	45	60
	[4] Minimum Circuit Ampacity (MCA)	14.8	17.5	22.9	26.5	28.7	39.7
Compressor	Rated load amps	8.8	11.1	14.3	16.7	18.0	24.3
Outdoor Coil Fan Motor	Full load amps	1.0	1.0	1.0	1.7	1.7	1.7
Indoor Blower Motor	Full load amps	2.8	2.6	4.1	3.9	4.5	7.6

NOTE-Extremes of operating range are plus and minus 10% of line voltage.

[1] AHRI Certified to AHRI Standard 210/240; 95°F outdoor air temperature, 80°F db/67°F wb entering evaporator air.

[2] Sound Rating Number rated in accordance with test conditions included in AHRI Standard 270.

[3] HACR type circuit breaker or fuse.

[4] Refer to National or Canadian Electrical Code manual to determine wire, fuse and disconnect size requirements.

OPTIONAL ACCESSORIES - ORDER SEPARATELY

Item		Order Number	Size 24	30	36	42	48	60
COOLING SYSTEM								
Compressor Crankcase Heater		**27U17**			•	•		
		27P79					•	•
Compressor Hard Start Kit		**10J42**	•	•	•			
		88M91				•	•	•
Compressor Timed-Off Control		**47J28**	•	•	•	•	•	•
Low Ambient Kit (40°F)		**21D20**	•	•	•	•	•	•
CABINET								
Base Rail Opening Closure Kit		**21J84**	•	•	•	•	•	•
Rectangular to Round Duct Adaptor Kits	Downflow - 14 in. dia.	**20X82**	•	•	•			
	- 14 in. dia.	**21D26**				•	•	•
	Horizontal - 14 in. dia.	**21J92**	•	•	•			
	- 14 in. dia.	**21D24**				•	•	•
	- 16 in. dia.	**22U78**				•	•	•
	- 18 in. dia.	**22U79**				•	•	•
HEATING SYSTEM								
Bottom Gas Entry Kit		**21D34**	•	•	•	•	•	•
LPG/Propane Conversion Kit		**22B87**	•	•	•	•	•	•
ELECTRICAL								
Bottom Power Entry Kit		**21J78**	•	•	•	•	•	•
INDOOR AIR QUALITY								
[1] Internal Filter Rack Kit (filters not furnished)	(1) 20 x 20 + (1) 14 x 20	**11U73**	•	•	•			
	(2) 20 x 20	**11U74**				•	•	•
ROOF CURBS								
Clip Curbs								
	8 in. height	**21J13**	•	•	•			
		21J17				•	•	•
	14 in. height	**21J14**	•	•	•			
		21J19				•	•	•
	18 in. height	**21J15**	•	•	•			
		21J20				•	•	•
	24 in. height	**21J16**	•	•	•			
		21J25				•	•	•
Adjustable Pitch Roof Curbs								
Welded Curbs		**22V54**	•	•	•			
		22V55				•	•	•
Clip Curbs		**21J26**	•	•	•			
		21U04				•	•	•
Strapping Kits for Roof Curbs								
Strapping Kit - Seismic		**21J75**	•	•	•	•	•	•

[1] Filters are not furnished and must be field provided.

SPECIFICATIONS - GAS HEAT

Size		24, 30, 36	24, 30	36, 42	36, 42	48, 60	48, 60
Heating Input		**-054**	**-072**	**-072**	**-090**	**-108**	**-126**
Heating Capacity Btuh	Input	54,000	73,000	72,000	90,000	108,000	126,000
	Output	44,000	58,000	58,000	73,000	88,000	102,000
[1] AFUE		81%	81%	81%	81%	81%	81%
Temperature Rise - °F		30-60	40-70	35-65	40-70	40-70	45-75
Gas Supply Connection (FPT) - in.		1/2	1/2	1/2	1/2	1/2	1/2
Min. Recommended Gas Supply Pressure		5 in. w.g. Natural Gas, 11 in. w.g. LPG/Propane					

[1] Annual Fuel Utilization Efficiency based on U.S. DOE test procedures and FTC labeling regulations.

HIGH ALTITUDE DERATE

Units may be installed at altitudes up to 4500 feet above sea level without any modification. At altitudes above 4500 feet, units must be derated 4% for every 1000 feet above sea level. Example - At an altitude of 6000 feet the unit would require a derate of 24%.

NOTE - This is the only permissible derate for these units.

FIELD WIRING

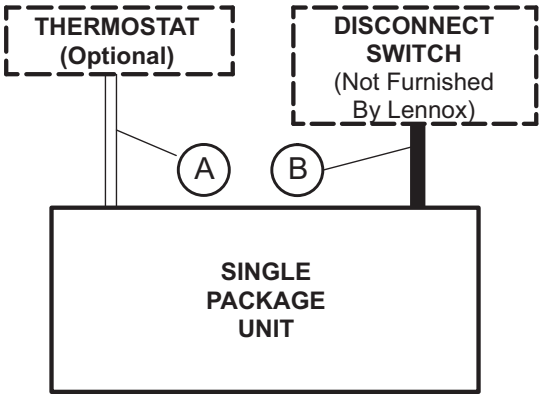

A − Five Wire Low Voltage (Electronic)

B − Two Wire Power (See Electrical Data Table)

− Field Wiring Not Furnished −

INSTALLATION CLEARANCES

	in.	mm
Front (heat exchanger access)	24	610
Right Side (blower access)	24	610
Left Side (evaporator coil access)	24	610
Back	0	0
Top	48	1219

MINIMUM CLEARANCE TO COMBUSTIBLE MATERIAL

	in.	mm
Front	0	0
Back	0	0
Right Side (vent cover)	12	305
Left Side	0	0
Top	0	0
Below Unit	0	0

COOLING RATINGS

NOTE − For Temperatures and Capacities not shown in tables, see bulletin − Cooling Unit Rating Table Correction Factor Data in Miscellaneous Engineering Data section.

2 TON - LRPGEK024 / LRP13GXK24

Entering Wet Bulb Temperature	Total Air Volume	Outdoor Air Temperature Entering Outdoor Coil																			
		85°F					95°F					105°F					115°F				
		Total Cool Cap.	Comp. Motor Input	Sensible To Total Ratio (S/T) Dry Bulb			Total Cool Cap.	Comp. Motor Input	Sensible To Total Ratio (S/T) Dry Bulb			Total Cool Cap.	Comp. Motor Input	Sensible To Total Ratio (S/T) Dry Bulb			Total Cool Cap.	Comp. Motor Input	Sensible To Total Ratio (S/T) Dry Bulb		
	cfm	kBtuh	kW	75°F	80°F	85°F	kBtuh	kW	75°F	80°F	85°F	kBtuh	kW	75°F	80°F	85°F	kBtuh	kW	75°F	80°F	85°F
59°F	650	21.4	1.35	.89	1.00	1.00	20.6	1.52	.91	1.00	1.00	19.8	1.71	.93	1.00	1.00	18.9	1.93	.96	1.00	1.00
	830	23.2	1.35	.96	1.00	1.00	22.2	1.52	.98	1.00	1.00	21.4	1.72	1.00	1.00	1.00	20.2	1.94	1.00	1.00	1.00
	1000	24.4	1.34	1.00	1.00	1.00	23.4	1.52	1.00	1.00	1.00	22.2	1.72	1.00	1.00	1.00	21.2	1.94	1.00	1.00	1.00
63°F	650	22.4	1.35	.74	.86	.98	21.4	1.52	.76	.88	1.00	20.4	1.71	.77	.90	1.00	19.3	1.93	.79	.92	1.00
	830	23.6	1.34	.79	.93	1.00	22.6	1.52	.80	.95	1.00	21.4	1.72	.82	.97	1.00	20.2	1.94	.84	1.00	1.00
	1000	24.6	1.34	.83	.99	1.00	23.4	1.52	.85	1.00	1.00	22.4	1.72	.87	1.00	1.00	21.2	1.94	.90	1.00	1.00
67°F	650	23.8	1.34	.60	.72	.84	22.8	1.52	.61	.73	.85	21.6	1.72	.62	.75	.87	20.4	1.94	.63	.77	.90
	830	25.0	1.34	.63	.77	.90	24.0	1.52	.64	.78	.92	22.6	1.72	.66	.81	.95	21.4	1.95	.67	.83	.98
	1000	26.0	1.33	.66	.81	.96	24.6	1.52	.68	.83	.98	23.2	1.72	.69	.85	1.00	22.0	1.95	.71	.88	1.00
71°F	650	25.0	1.34	.46	.59	.70	23.8	1.52	.47	.59	.72	22.6	1.72	.47	.61	.73	21.4	1.95	.49	.62	.75
	830	26.4	1.33	.48	.62	.75	25.2	1.52	.49	.63	.76	23.8	1.72	.49	.65	.79	22.4	1.95	.50	.67	.81
	1000	27.4	1.32	.50	.65	.79	26.0	1.51	.51	.67	.81	24.6	1.72	.51	.68	.84	23.2	1.96	.52	.70	.86

2.5 TON - LRPGEK030 / LRP13GXK30

Entering Wet Bulb Temperature	Total Air Volume	Outdoor Air Temperature Entering Outdoor Coil																			
		85°F					95°F					105°F					115°F				
		Total Cool Cap.	Comp. Motor Input	Sensible To Total Ratio (S/T) Dry Bulb			Total Cool Cap.	Comp. Motor Input	Sensible To Total Ratio (S/T) Dry Bulb			Total Cool Cap.	Comp. Motor Input	Sensible To Total Ratio (S/T) Dry Bulb			Total Cool Cap.	Comp. Motor Input	Sensible To Total Ratio (S/T) Dry Bulb		
	cfm	kBtuh	kW	75°F	80°F	85°F	kBtuh	kW	75°F	80°F	85°F	kBtuh	kW	75°F	80°F	85°F	kBtuh	kW	75°F	80°F	85°F
59°F	800	27.4	1.65	.94	1.00	1.00	26.4	1.87	.97	1.00	1.00	25.2	2.10	.99	1.00	1.00	23.8	2.37	1.00	1.00	1.00
	1000	29.2	1.66	1.00	1.00	1.00	28.0	1.88	1.00	1.00	1.00	27.0	2.12	1.00	1.00	1.00	25.4	2.40	1.00	1.00	1.00
	1200	30.6	1.66	1.00	1.00	1.00	29.4	1.88	1.00	1.00	1.00	28.0	2.13	1.00	1.00	1.00	26.6	2.41	1.00	1.00	1.00
63°F	800	28.4	1.66	.78	.91	1.00	27.2	1.87	.80	.93	1.00	25.6	2.11	.81	.96	1.00	24.2	2.37	.84	.99	1.00
	1000	29.6	1.66	.84	.99	1.00	28.2	1.88	.86	1.00	1.00	27.0	2.12	.88	1.00	1.00	25.4	2.40	.91	1.00	1.00
	1200	30.6	1.66	.90	1.00	1.00	29.4	1.88	.92	1.00	1.00	28.0	2.13	.95	1.00	1.00	26.6	2.41	.98	1.00	1.00
67°F	800	30.0	1.66	.63	.76	.88	28.6	1.88	.64	.78	.91	27.2	2.13	.65	.80	.93	25.6	2.40	.67	.82	.96
	1000	31.4	1.66	.67	.82	.96	29.8	1.89	.68	.84	.99	28.2	2.14	.69	.86	1.00	26.6	2.41	.72	.90	1.00
	1200	32.2	1.66	.71	.88	1.00	30.6	1.89	.73	.90	1.00	29.0	2.15	.74	.93	1.00	27.4	2.43	.76	.96	1.00
71°F	800	31.6	1.66	.49	.62	.74	30.2	1.89	.50	.63	.76	28.8	2.14	.50	.64	.78	27.2	2.42	.51	.66	.80
	1000	33.0	1.66	.52	.66	.80	31.4	1.89	.51	.68	.82	29.8	2.15	.53	.69	.85	28.2	2.44	.54	.71	.88
	1200	34.0	1.66	.53	.70	.86	32.4	1.89	.54	.72	.88	30.6	2.16	.55	.74	.91	28.8	2.44	.57	.77	.95

3 TON - LRPGEK036 / LRP13GXK36

Entering Wet Bulb Temperature	Total Air Volume	Outdoor Air Temperature Entering Outdoor Coil																			
		85°F					95°F					105°F					115°F				
		Total Cool Cap.	Comp. Motor Input	Sensible To Total Ratio (S/T) Dry Bulb			Total Cool Cap.	Comp. Motor Input	Sensible To Total Ratio (S/T) Dry Bulb			Total Cool Cap.	Comp. Motor Input	Sensible To Total Ratio (S/T) Dry Bulb			Total Cool Cap.	Comp. Motor Input	Sensible To Total Ratio (S/T) Dry Bulb		
	cfm	kBtuh	kW	75°F	80°F	85°F	kBtuh	kW	75°F	80°F	85°F	kBtuh	kW	75°F	80°F	85°F	kBtuh	kW	75°F	80°F	85°F
59°F	1000	32.4	2.01	.94	1.00	1.00	31.4	2.27	.96	1.00	1.00	30.0	2.57	.98	1.00	1.00	28.6	2.91	1.00	1.00	1.00
	1200	34.2	2.01	1.00	1.00	1.00	33.0	2.28	1.00	1.00	1.00	31.8	2.58	1.00	1.00	1.00	30.2	2.92	1.00	1.00	1.00
	1440	35.8	2.02	1.00	1.00	1.00	34.6	2.29	1.00	1.00	1.00	33.0	2.58	1.00	1.00	1.00	31.6	2.93	1.00	1.00	1.00
63°F	1000	33.8	2.01	.78	.91	1.00	32.2	2.28	.79	.93	1.00	30.8	2.57	.81	.96	1.00	29.4	2.92	.83	.98	1.00
	1200	34.8	2.02	.83	.97	1.00	33.6	2.28	.84	.99	1.00	32.0	2.58	.86	1.00	1.00	30.2	2.92	.89	1.00	1.00
	1440	36.0	2.02	.88	1.00	1.00	34.6	2.29	.90	1.00	1.00	33.0	2.58	.92	1.00	1.00	31.6	2.93	.95	1.00	1.00
67°F	1000	35.6	2.02	.63	.76	.88	34.0	2.28	.64	.78	.90	32.6	2.58	.65	.79	.93	30.8	2.92	.66	.81	.96
	1200	36.8	2.02	.66	.80	.95	35.2	2.29	.67	.82	.97	33.6	2.59	.69	.84	.99	31.8	2.93	.70	.87	1.00
	1440	37.8	2.02	.70	.86	1.00	36.2	2.29	.71	.88	1.00	34.4	2.59	.73	.91	1.00	32.4	2.93	.75	.94	1.00
71°F	1000	37.4	2.02	.49	.62	.74	36.0	2.29	.49	.63	.75	34.2	2.59	.50	.64	.77	32.6	2.93	.51	.66	.79
	1200	38.5	2.03	.51	.65	.79	37.0	2.30	.51	.66	.81	35.4	2.60	.52	.68	.83	33.4	2.94	.53	.70	.85
	1440	39.5	2.03	.53	.69	.84	38.0	2.30	.53	.71	.86	36.2	2.60	.55	.73	.89	34.4	2.94	.57	.75	.92

COOLING RATINGS

NOTE − For Temperatures and Capacities not shown in tables, see bulletin − Cooling Unit Rating Table Correction Factor Data in Miscellaneous Engineering Data section.

3.5 TON - LRPGEK042 / LRP13GXK42

Entering Wet Bulb Temperature	Total Air Volume	Outdoor Air Temperature Entering Outdoor Coil																			
		85°F					95°F					105°F					115°F				
		Total Cool Cap.	Comp. Motor Input	Sensible To Total Ratio (S/T) Dry Bulb			Total Cool Cap.	Comp. Motor Input	Sensible To Total Ratio (S/T) Dry Bulb			Total Cool Cap.	Comp. Motor Input	Sensible To Total Ratio (S/T) Dry Bulb			Total Cool Cap.	Comp. Motor Input	Sensible To Total Ratio (S/T) Dry Bulb		
	cfm	kBtuh	kW	75°F	80°F	85°F	kBtuh	kW	75°F	80°F	85°F	kBtuh	kW	75°F	80°F	85°F	kBtuh	kW	75°F	80°F	85°F
59°F	1200	41.0	2.49	.95	1.00	1.00	39.5	2.81	.96	1.00	1.00	37.8	3.16	.98	1.00	1.00	36.4	3.56	1.00	1.00	1.00
	1450	43.5	2.48	1.00	1.00	1.00	42.0	2.80	1.00	1.00	1.00	40.0	3.15	1.00	1.00	1.00	38.5	3.56	1.00	1.00	1.00
	1750	45.5	2.47	1.00	1.00	1.00	44.0	2.79	1.00	1.00	1.00	42.0	3.15	1.00	1.00	1.00	40.0	3.56	1.00	1.00	1.00
63°F	1200	42.5	2.49	.78	.92	1.00	40.5	2.80	.79	.94	1.00	38.5	3.16	.81	.96	1.00	36.8	3.56	.83	.98	1.00
	1450	44.0	2.48	.83	.98	1.00	42.5	2.80	.84	.99	1.00	40.0	3.15	.87	1.00	1.00	38.5	3.56	.89	1.00	1.00
	1750	46.0	2.47	.89	1.00	1.00	44.0	2.79	.91	1.00	1.00	42.0	3.15	.93	1.00	1.00	40.5	3.56	.96	1.00	1.00
67°F	1200	44.5	2.47	.63	.76	.89	43.0	2.79	.64	.78	.91	41.0	3.15	.65	.79	.93	39.0	3.56	.65	.81	.96
	1450	46.5	2.46	.66	.81	.95	44.5	2.79	.68	.83	.97	42.5	3.15	.68	.85	.99	40.0	3.56	.71	.87	1.00
	1750	48.0	2.45	.70	.87	1.00	45.5	2.78	.72	.89	1.00	43.5	3.14	.72	.92	1.00	41.5	3.56	.74	.94	1.00
71°F	1200	47.0	2.46	.48	.62	.74	45.0	2.78	.49	.63	.76	43.5	3.14	.50	.64	.77	41.0	3.56	.51	.66	.79
	1450	49.0	2.44	.50	.65	.80	47.0	2.77	.51	.67	.82	44.5	3.14	.52	.68	.83	42.5	3.56	.53	.69	.86
	1750	50.5	2.43	.53	.70	.86	48.0	2.76	.53	.71	.88	46.0	3.13	.55	.73	.90	43.5	3.55	.56	.75	.94

4 TON - LRPGEK048 / LRP13GXK48

Entering Wet Bulb Temperature	Total Air Volume	Outdoor Air Temperature Entering Outdoor Coil																			
		85°F					95°F					105°F					115°F				
		Total Cool Cap.	Comp. Motor Input	Sensible To Total Ratio (S/T) Dry Bulb			Total Cool Cap.	Comp. Motor Input	Sensible To Total Ratio (S/T) Dry Bulb			Total Cool Cap.	Comp. Motor Input	Sensible To Total Ratio (S/T) Dry Bulb			Total Cool Cap.	Comp. Motor Input	Sensible To Total Ratio (S/T) Dry Bulb		
	cfm	kBtuh	kW	75°F	80°F	85°F	kBtuh	kW	75°F	80°F	85°F	kBtuh	kW	75°F	80°F	85°F	kBtuh	kW	75°F	80°F	85°F
59°F	1300	43.5	2.59	.94	1.00	1.00	42.0	2.96	.96	1.00	1.00	40.5	3.37	.98	1.00	1.00	38.5	3.84	1.00	1.00	1.00
	1600	46.0	2.60	1.00	1.00	1.00	44.5	2.97	1.00	1.00	1.00	42.5	3.39	1.00	1.00	1.00	40.5	3.85	1.00	1.00	1.00
	1900	48.0	2.62	1.00	1.00	1.00	46.5	2.99	1.00	1.00	1.00	44.5	3.40	1.00	1.00	1.00	42.5	3.86	1.00	1.00	1.00
63°F	1300	45.0	2.60	.77	.91	1.00	43.5	2.97	.79	.92	1.00	41.0	3.38	.80	.95	1.00	39.0	3.85	.83	.98	1.00
	1600	47.0	2.61	.83	.98	1.00	45.0	2.98	.84	1.00	1.00	43.0	3.39	.86	1.00	1.00	41.0	3.86	.89	1.00	1.00
	1900	48.0	2.62	.88	1.00	1.00	46.5	2.99	.90	1.00	1.00	45.0	3.40	.92	1.00	1.00	42.5	3.86	.95	1.00	1.00
67°F	1300	47.5	2.61	.63	.75	.88	45.5	2.98	.63	.77	.90	43.5	3.39	.64	.79	.92	41.0	3.86	.66	.81	.95
	1600	49.5	2.62	.66	.81	.95	47.5	2.99	.67	.83	.97	45.0	3.40	.69	.85	1.00	43.0	3.86	.70	.87	1.00
	1900	51.0	2.63	.70	.86	1.00	49.0	3.00	.71	.88	1.00	46.5	3.40	.72	.91	1.00	44.0	3.87	.75	.93	1.00
71°F	1300	50.0	2.62	.48	.61	.73	48.0	2.99	.49	.62	.75	46.0	3.40	.49	.63	.77	43.5	3.86	.50	.65	.79
	1600	52.0	2.63	.51	.65	.79	50.0	3.00	.51	.66	.81	47.5	3.41	.52	.68	.83	45.0	3.87	.53	.70	.86
	1900	53.5	2.63	.53	.69	.85	51.0	3.00	.54	.70	.87	48.5	3.41	.54	.72	.89	46.0	3.87	.56	.74	.92

5 TON - LRPGEK060 / LRP13GXK60

Entering Wet Bulb Temperature	Total Air Volume	Outdoor Air Temperature Entering Outdoor Coil																			
		85°F					95°F					105°F					115°F				
		Total Cool Cap.	Comp. Motor Input	Sensible To Total Ratio (S/T) Dry Bulb			Total Cool Cap.	Comp. Motor Input	Sensible To Total Ratio (S/T) Dry Bulb			Total Cool Cap.	Comp. Motor Input	Sensible To Total Ratio (S/T) Dry Bulb			Total Cool Cap.	Comp. Motor Input	Sensible To Total Ratio (S/T) Dry Bulb		
	cfm	kBtuh	kW	75°F	80°F	85°F	kBtuh	kW	75°F	80°F	85°F	kBtuh	kW	75°F	80°F	85°F	kBtuh	kW	75°F	80°F	85°F
59°F	1450	55.5	3.47	.89	1.00	1.00	54.0	3.92	.91	1.00	1.00	51.5	4.43	.93	1.00	1.00	49.5	5.02	.95	1.00	1.00
	1800	60.0	3.49	.96	1.00	1.00	57.5	3.95	.98	1.00	1.00	55.0	4.46	1.00	1.00	1.00	53.0	5.06	1.00	1.00	1.00
	2100	62.5	3.50	1.00	1.00	1.00	60.0	3.96	1.00	1.00	1.00	58.0	4.48	1.00	1.00	1.00	55.0	5.08	1.00	1.00	1.00
63°F	1450	58.5	3.49	.74	.86	.98	56.5	3.94	.76	.88	1.00	54.0	4.44	.77	.90	1.00	51.0	5.03	.79	.93	1.00
	1800	61.5	3.50	.79	.93	1.00	58.5	3.95	.81	.95	1.00	56.0	4.47	.82	.98	1.00	53.5	5.06	.85	1.00	1.00
	2100	63.5	3.51	.83	.98	1.00	60.5	3.96	.85	1.00	1.00	57.5	4.48	.87	1.00	1.00	55.5	5.08	.90	1.00	1.00
67°F	1450	61.5	3.50	.60	.72	.83	59.5	3.96	.61	.73	.85	56.5	4.47	.62	.75	.87	53.5	5.06	.63	.77	.89
	1800	65.0	3.51	.64	.77	.90	61.5	3.97	.65	.79	.92	59.5	4.49	.66	.81	.95	56.0	5.09	.67	.83	.98
	2100	66.5	3.52	.67	.81	.96	64.0	3.98	.68	.83	.99	60.5	4.50	.69	.86	1.00	57.5	5.10	.71	.88	1.00
71°F	1450	65.0	3.51	.47	.59	.70	62.5	3.97	.48	.60	.71	59.5	4.49	.48	.61	.73	56.5	5.09	.49	.62	.75
	1800	67.5	3.52	.49	.63	.75	65.5	3.99	.50	.64	.77	62.0	4.51	.50	.65	.79	59.0	5.12	.52	.67	.81
	2100	69.5	3.53	.51	.66	.80	67.0	4.00	.52	.67	.82	63.5	4.52	.53	.69	.84	60.5	5.13	.54	.71	.86

BLOWER DATA

Model	Blower Tap	Air Volume (cfm) at Various External Static Pressures - in. w.g.									
		0.1	0.2	0.3	0.4	0.5	0.6	0.7	0.8	0.9	1.0
LRP13GEK24 LRP13GXK24	Tap 1 (Fan Only)	610	560	525	485	430	- - -	- - -	- - -	- - -	- - -
	Tap 2 (Low Cooling)	820	795	760	720	690	650	615	575	540	470
	Tap 3 (High Cooling)	960	925	885	850	815	780	745	710	675	635
LRP13GEK30 LRP13GXK30	Tap 1 (Fan Only)	850	820	780	745	710	680	630	590	550	515
	Tap 2 (Low Cooling)	1040	1000	970	935	900	875	845	815	770	735
	Tap 3 (High Cooling)	1140	1105	1075	1045	1015	1000	965	925	890	825
LRP13GEK36 LRP13GXK36	Tap 1 (Fan Only)	850	800	750	700	645	600	550	480	435	- - -
	Tap 2 (Low Cooling)	1245	1210	1175	1140	1100	1065	1025	975	920	845
	Tap 3 (High Cooling)	1390	1355	1320	1285	1250	1205	1165	1125	1050	875
LRP13GEK42 LRP13GXK42	Tap 1 (Fan Only)	800	720	640	550	475	390	310	- - -	- - -	- - -
	Tap 2 (Low Cooling)	1470	1410	1360	1300	1260	1210	1155	1095	1000	940
	Tap 3 (High Cooling)	1600	1555	1510	1470	1430	1390	1340	1265	1210	1155
LRP13GEK48 LRP13GXK48	Tap 1 (Fan Only)	1145	1075	1000	930	850	790	740	670	570	490
	Tap 2 (Low Cooling)	1675	1630	1600	1540	1490	1440	1390	1300	1230	1125
	Tap 3 (High Cooling)	1775	1735	1700	1660	1605	1555	1515	1455	- - -	- - -
LRP13GEK60 LRP13GXK60	Tap 1 (Fan Only)	1045	970	895	820	745	665	580	480	- - -	- - -
	Tap 2 (Low Cooling)	1855	1810	1770	1725	1680	1630	1595	1550	- - -	- - -
	Tap 3 (High Cooling)	1965	1920	1875	1835	1785	1750	1710	1665	1615	1570

NOTE - All air data is measured external to unit with dry coil and without air filters.

ACCESSORY AIR RESISTANCE DATA - in. w.g.

Air Volume cfm	Rectangular to Round Duct Adaptor Kits					
	Downflow		Horizontal			
	14 in. Diameter		14 in. Diameter		16 in. Diameter	18 in. Diameter
	24, 30, 36	42, 48, 60	24, 30, 36	42, 48, 60	42, 48, 60	42, 48, 60
500	0.03	- - -	0.04	- - -	- - -	- - -
600	0.05	- - -	0.07	- - -	- - -	- - -
700	0.08	0.13	0.08	0.13	- - -	- - -
800	0.10	0.17	0.12	0.16	- - -	- - -
900	0.12	0.21	0.15	0.21	- - -	- - -
1000	0.17	0.24	0.19	0.25	0.11	0.03
1100	0.18	0.30	0.23	0.30	0.11	0.03
1200	0.20	0.36	0.29	0.37	0.13	0.03
1300	0.26	0.43	0.31	0.43	0.17	0.03
1400	0.31	0.50	0.39	0.51	0.20	0.03
1500	- - -	0.57	- - -	0.57	0.21	0.05
1600	- - -	0.63	- - -	0.65	0.26	0.05
1700	- - -	0.71	- - -	0.72	0.30	0.06
1800	- - -	0.80	- - -	0.81	0.30	0.06
1900	- - -	0.91	- - -	0.90	0.40	0.06
2000	- - -	0.99	- - -	1.01	0.41	0.06

DIMENSIONS UNIT

Size	CORNER WEIGHTS								CENTER OF GRAVITY			
	AA		BB		CC		DD		EE		FF	
	lbs.	kg	lbs.	kg	lbs.	kg	lbs.	kg	in.	mm	in.	mm
24	98	44	98	44	105	48	104	47	23-1/4	591	21-3/4	552
30	100	45	101	46	108	49	108	49	23-1/4	591	21-3/4	552
36	104	47	105	48	112	51	112	51	23-1/4	591	21-3/4	552
42	122	55	123	56	131	59	131	59	27-1/2	699	21-3/4	552
48	126	57	127	58	136	62	135	61	27-1/2	699	21-3/4	552
60	135	61	136	62	145	66	144	65	27-1/2	699	21-3/4	552

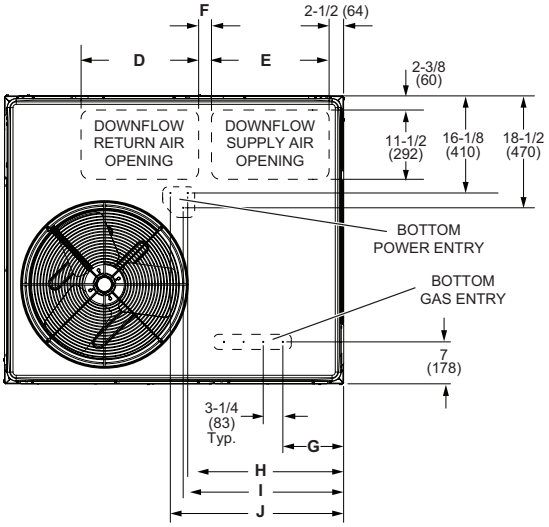

TOP VIEW (Base)

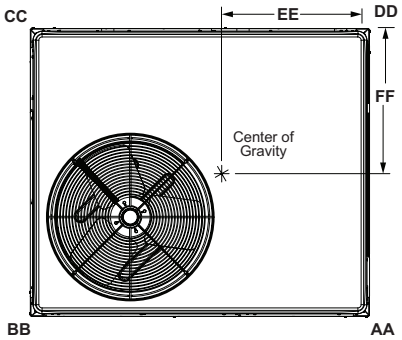

TOP VIEW
(Corner Weight and Center of Gravity)

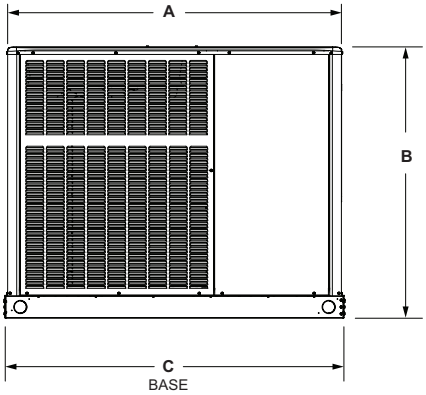

FRONT VIEW

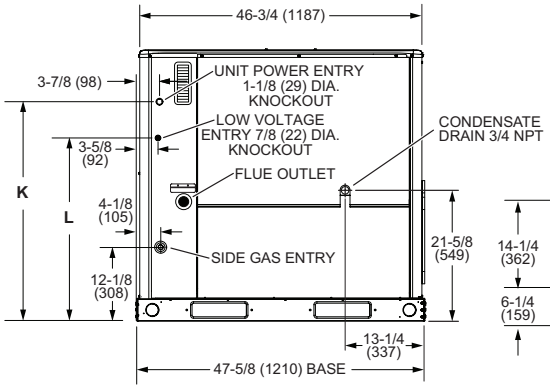

RIGHT SIDE VIEW

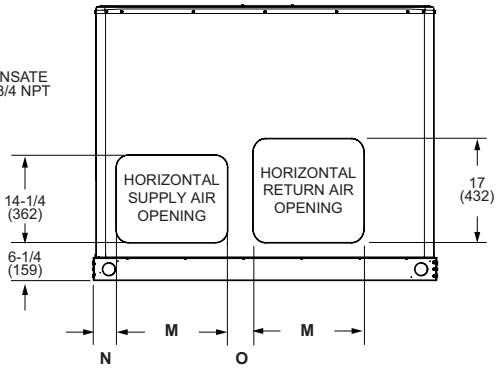

BACK VIEW

Size	A		B		C		D		E		F		G		H	
	in.	mm	in.	mm	in.	mm	in.	mm	in.	mm	in.	mm	in.	mm	in.	mm
24, 30, 36	47-5/8	1210	40-7/8	1038	47-5/8	1210	16-3/4	425	14	356	2	51	4-1/2	114	20-1/4	514
42, 48, 60	55-1/4	1403	44-7/8	1140	56-1/8	1426	19-1/2	495	19-1/2	495	2-1/8	54	10	254	25-7/8	657

Size	I		J		K		L		M		N		O	
	in.	mm	in.	mm	in.	mm	in.	mm	in.	mm	in.	mm	in.	mm
24, 30, 36	21	533	23-1/4	591	32-1/4	819	26-1/4	667	13-1/2	343	3-1/8	79	5-7/8	149
42, 48, 60	26-1/2	673	26-3/4	679	36-1/4	921	30-1/4	768	18-1/4	463	3-3/4	95	4-3/8	111

CLIP CURB

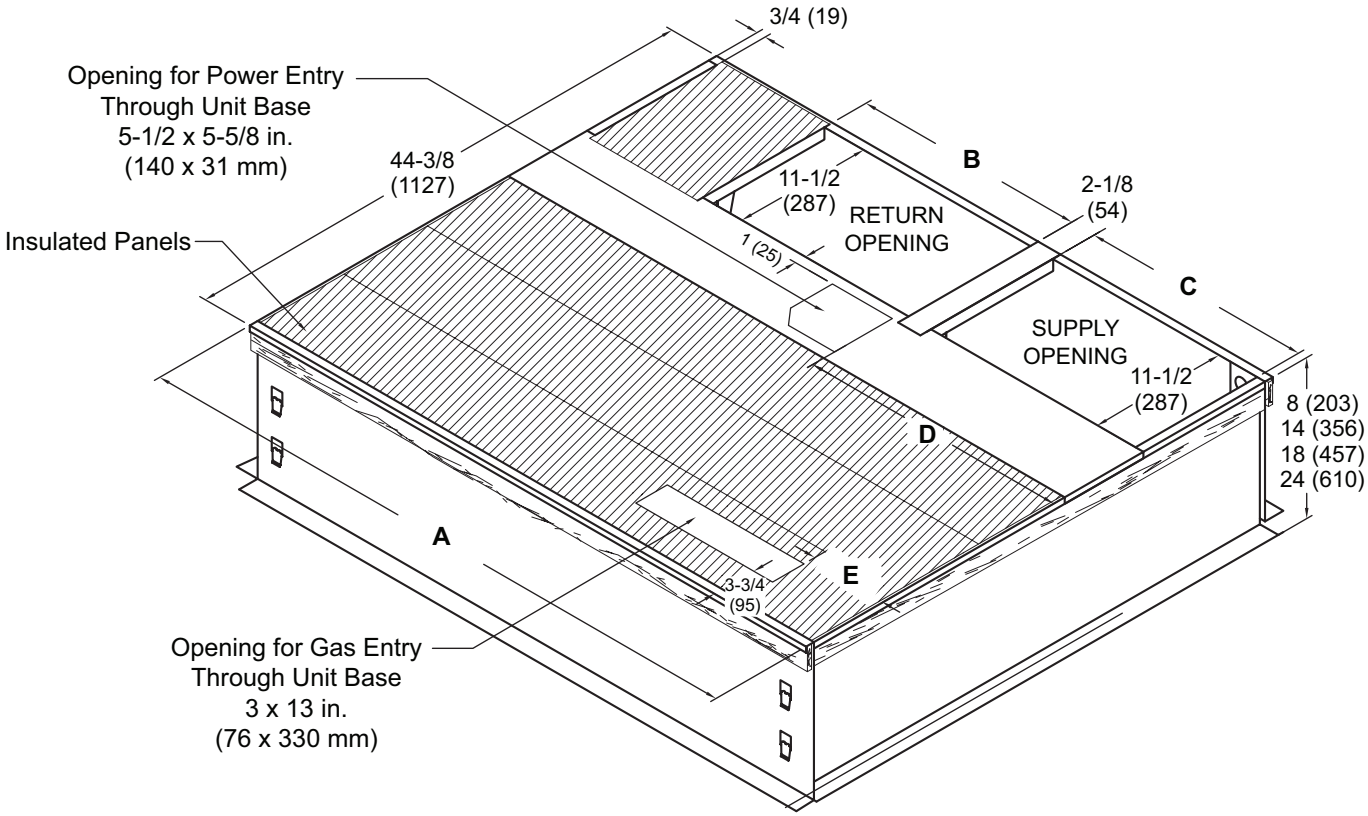

NOTE - Roof deck may be omitted within confines of curb.

TYPICAL FLASHING DETAIL FOR ROOF CURB

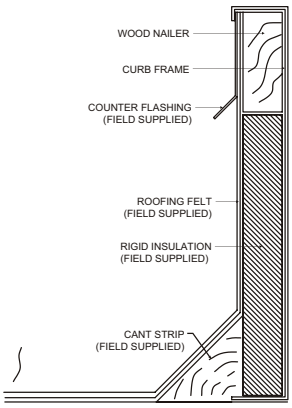

DETAIL ROOF CURB

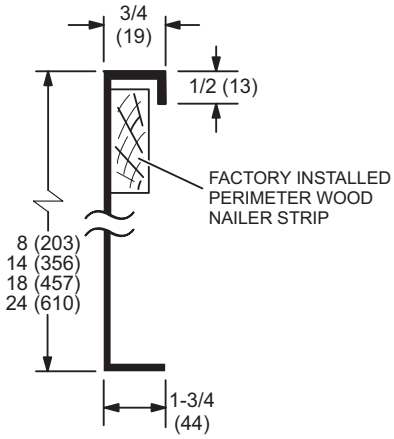

Usage	A		B		C		D		E	
	in.	mm	in.	mm	in.	mm	in.	mm	in.	mm
24, 30, 36	44-3/8	1127	16-7/8	429	13-7/8	352	17-1/4	438	1-1/4	32
42, 48, 60	52-7/8	1343	19-1/2	380	19-1/2	352	23-1/8	587	7	178

ADJUSTABLE PITCH ROOF WELDED CURB

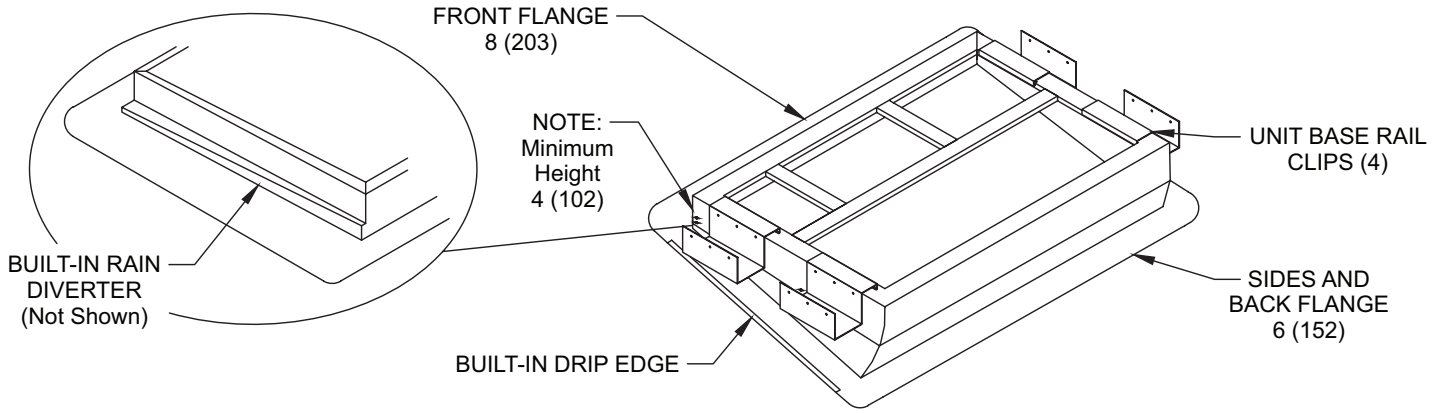

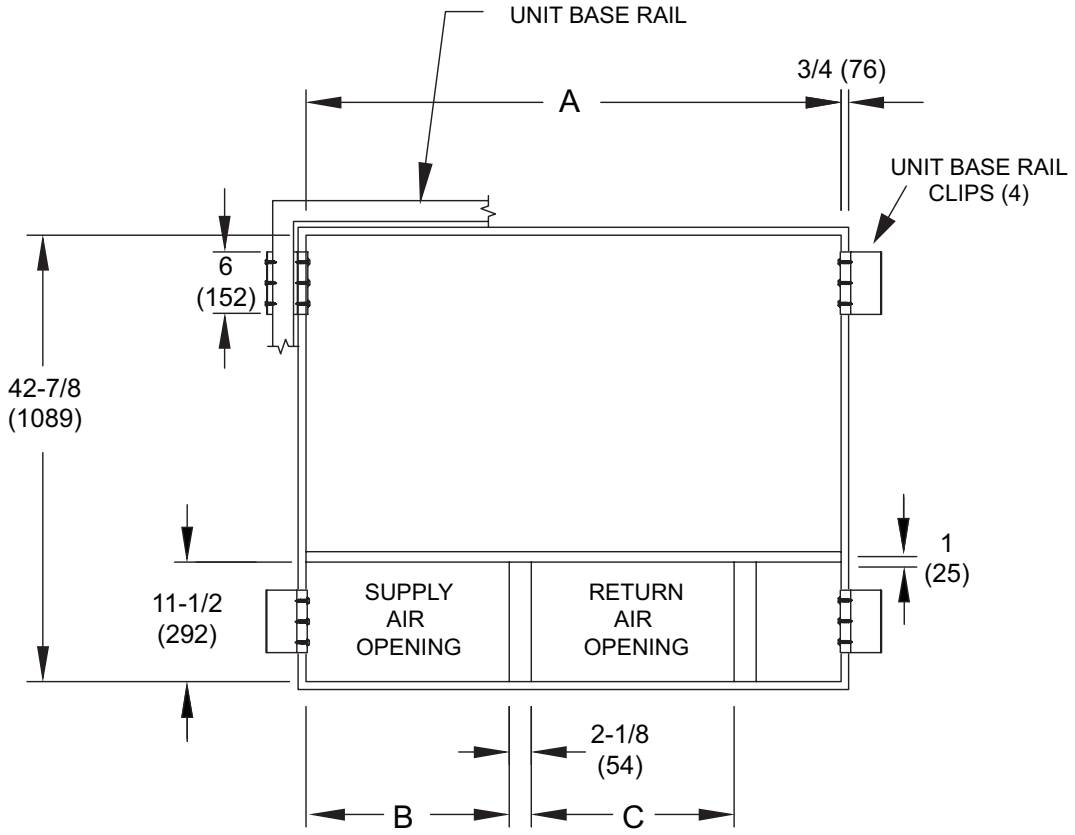

Usage	A		B		C	
	in.	mm	in.	mm	in.	mm
24, 30, 36	42-7/8	1089	13-7/8	352	16-7/8	429
42, 48, 60	51-3/8	1305	19-1/2	495	19-1/2	495

ADJUSTABLE PITCH ROOF CLIP CURB

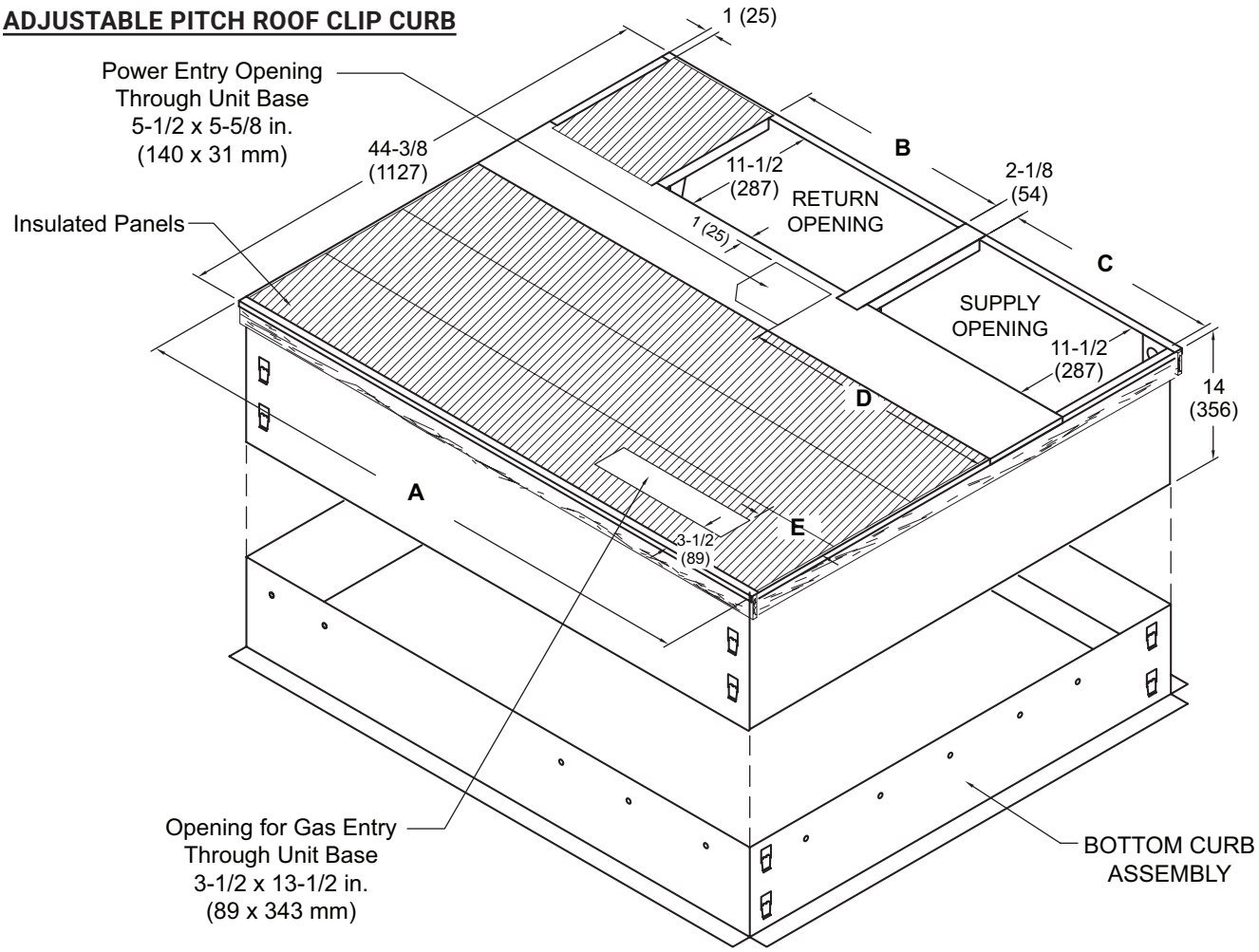

NOTE - Roof deck may be omitted within confines of curb.

TYPICAL FLASHING DETAIL FOR ROOF CURB

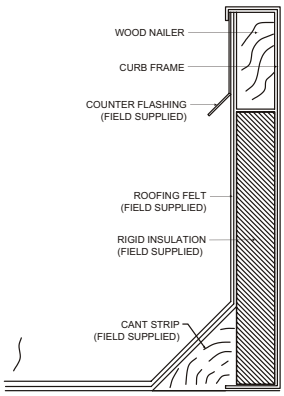

DETAIL ROOF CURB

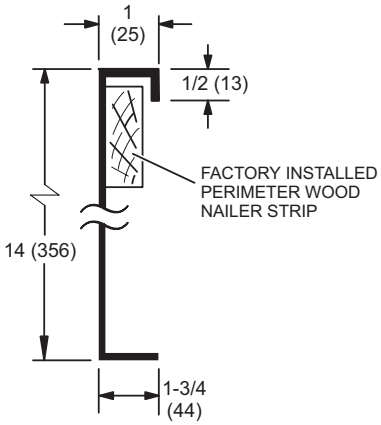

Usage	A		B		C		D		E	
	in.	mm	in.	mm	in.	mm	in.	mm	in.	mm
24, 30, 36	44-3/8	1127	16-7/8	429	13-7/8	352	17-1/4	438	1-1/4	32
42, 48, 60	52-7/8	1343	19-1/2	380	19-1/2	352	23-1/8	587	7	178

REVISIONS

Sections	Description of Change
Control Options	Updated to reflect latest product offering.
Dimensions	Updated dimension table.

Visit us at www.Lennox.com
For the latest technical information, www.LennoxPros.com
Contact us at 1-800-4-LENNOX

NOTE - Due to Lennox' ongoing commitment to quality, Specifications, Ratings and Dimensions subject to change without notice and without incurring liability.
Improper installation, adjustment, alteration, service or maintenance can cause property damage or personal injury.
Installation and service must be performed by a qualified installer and servicing agency.

©2026 Lennox Industries, Inc.