GAS FURNACES

EL195UHNE

ELITE® SERIES

Upflow / Horizontal - Constant Torque Blower Motor - 60 Hz

RESIDENTIAL PRODUCT SPECIFICATIONS

Bulletin No. 210812
July 2026
Supersedes all previous versions

ELITE® SERIES

QUALIFIED ONLY IN

U.S. SOUTH: AL, AZ, AR, CA, DC, DE, FL, GA, HI, KY, LA, MD, MS, NV, NM, NC, OK, SC, TN, TX, VA

ENERGY STAR

AFUE - 95%
Meets NO_x Limit of 14 ng/J
Input - 40,000 to 100,000 Btuh
Nominal Add-on Cooling - 1 to 5 Tons

MODEL NUMBER IDENTIFICATION

EL 1 95 UH 060 N E 36 B

Unit Type
EL = Elite® Series

Stages
1 = One-Stage

AFUE
95 = 95%

Configuration
UH = Upflow/Horizontal

Nominal Gas Heat Input
040 = 40,000 Btuh
060 = 60,000 Btuh
080 = 80,000 Btuh
100 = 100,000 Btuh

Ultra-Low NOx
N = Units meet California Nitrogen Oxides Standard (14ng/J)

Blower
E = High Efficiency Constant Torque Blower Motor

Nominal Add-On Cooling Capacity
36 = 1.5-3 tons
48 = 2.5-4 tons
60 = 3-5 tons

[1] **Cabinet Width**
B = 17-1/2 in.
C = 21 in.

[1] Indoor coils with the same letter designation physically matches the furnace.

FEATURE HIGHLIGHTS

1. Heat Exchanger Assembly
2. Secondary Heat Exchanger
3. SureLight® Hot Surface Ignitor
4. Modulating Gas Control Valve
5. Combustion Air Inducer
6. Thermal Switch
7. SureLight® Integrated Furnace Control
8. Constant Torque Direct Drive Blower
9. Insulated Cabinet
10. Safety Interlock Switch
11. Gas Piping And Electrical Inlets

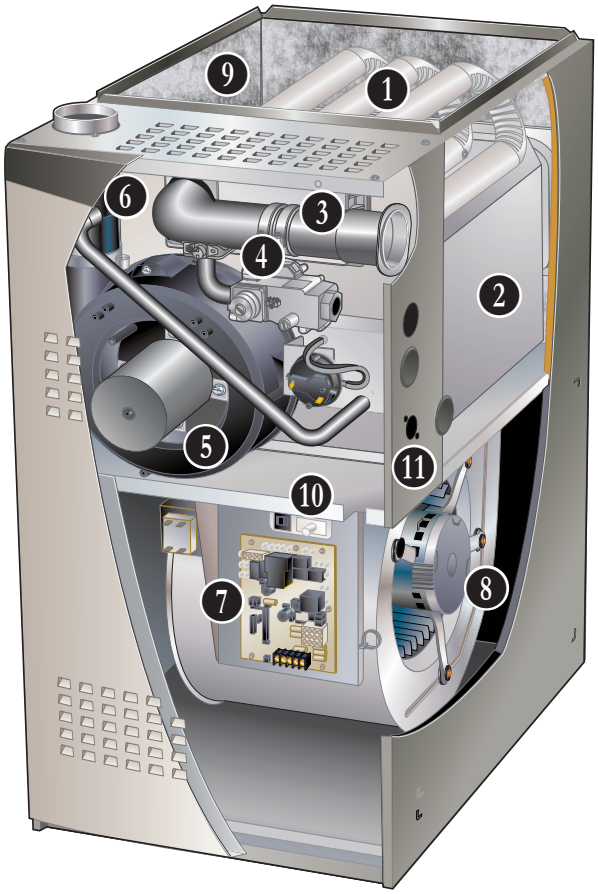

NOTE - EL195UHNV 40K AND 100K INPUT FURNACES ARE NATURAL GAS ONLY!
NOTE - NOT AVAILABLE IN ALL AREAS!
CONTACT YOUR NEAREST LENNOX SALES OFFICE FOR DETAILS.

CONTENTS

Approvals And Warranty . . . 3
Blower Data . . . 14
Dimensions . . . 16
- Furnace/Coil Combined Dimensions . . . 22
- Optional Accessories . . . 18
- Optional Accessories - Venting. . . . 19
- Unit - Horizontal Position . . . 17
- Unit - Upflow Position . . . 16
Features . . . 3
Gas Heat Accessories . . . 10
High Altitude Operation. . . . 11
Installation Clearances . . . 13
Model Number Identification. . . . 1
Optional Accessories - Order Separately . . . 10
Specifications . . . 9
Vent Lengths - Uninsulated Exhaust Pipe In Unconditioned Space . . . 11

APPROVALS AND WARRANTY

APPROVALS

- AHRI Certified
- CSA International Certified
- Tested and rated according to US DOE test procedures and FTC labeling regulations
- Units are approved for installations from 0 - 4500 ft.
- ENERGY STAR® units are certified only in the U.S. South in certain states and are designed to use less energy, help save money on utility bills, and help protect the environment
- ISO 9001 Registered Manufacturing Quality System
- Blower data from unit tests conducted in Lennox Laboratory air test chamber

NOTE - This furnace has not been CSA International design certified for installation in mobile homes, recreational vehicles, or outdoors.

California Only

- These furnaces **meet** the South Coast Air Quality Management District (SCAQMD) Rule 1111 and San Joaquin Valley Air Pollution Control District (SJVAPCD) Rule 4905 NOx emission limit (14 ng/J) and can be installed within the SCAQMD, SJVAPCD and Bay area

WARRANTY

- Heat Exchanger:
  - Limited lifetime (twenty year transferable) in residential applications
  - Limited ten years in non-residential applications
- All other covered components:
  - Limited five years in residential installations
  - Limited one year in non-residential installations

NOTE - Refer to Lennox® Basic Limited Warranty at www.Lennox.com for additional details.

FEATURES

APPLICATIONS

- Input capacities of 40,000, 60,000, 80,000 and 100,000 Btuh
- Energy efficiency (AFUE) - 95%
- Upflow, horizontal-left or horizontal-right applications
- Utility room, alcove, closet, crawl space, basement or attic installation
- Lennox add-on indoor coils, high-efficiency air cleaners and humidifiers can easily be added to furnace
- Shipped factory assembled with all controls installed and wired
- Removable bottom seal panel shipped in place for side return air is easily removed for bottom/end return air applications
- Each unit factory test operated to ensure proper operation

HEATING SYSTEM

1 Heat Exchanger Assembly

- Heavy-gauge, aluminized steel heat exchanger
- Tubular type design
- Designed for normal expansion and contraction with maximum efficiency and minimum resistance to air flow
- 2 Secondary heat exchanger condenser coil constructed of aluminum fins fitted to stainless steel tubes
- Coil is factory tested for leaks
- Condensate drain header box assembly located on front of coil
- Laboratory life cycle tested in excess of industry standards
- Compact size of complete heat exchanger assembly permits low overall design of furnace cabinet

Header Box

- Header box on end of condenser coil collects flue condensate for disposal through condensate drains
- Drains are located on each side of the cabinet for easy field installation of condensate drain trap
- Only one drain is used, the other drain is sealed
- Condensate drain trap is included for field installation

Flue Condensate Trap Assembly

- Field installed outside the conditioned air stream
- Assembly can be mounted on either side of cabinet in upflow applications
- Assembly is mounted below the cabinet in horizontal applications
- Can also be mounted remotely (up to 5 ft. away) from unit
- See Installation Instructions
- 90° street elbow furnished for ease of drain trap installation
- Drain connection can be made with field provided PVC pipe, PVC coupling, or vinyl tubing with hose clamp
- Drain cap on trap allows easy cleaning and winterizing

HEATING SYSTEM (continued)

3 SureLight® Hot Surface Ignitor
- Tough, reliable, long-life, trouble-free performance
- Silicon nitride ignitor
- Cemented to steatite block for protection against current leakage
- Ignition leads are constructed of nickel-plated copper and are enclosed in high temperature Teflon® insulation for dependable operation

4 Modulating Gas Control Valve
- 24 volt redundant combination modulating gas control valve combines manual shut off switch (On-Off), automatic electric valve (dual) and gas pressure regulation into a compact combination control

5 Combustion Air Inducer
- Shaded pole heavy duty blower prepurges heat exchanger and safely vents flue products
- Operates only during heating cycle

Pressure Switch
- Proves Combustion Air Inducer operation before allowing gas valve to open

6 Thermal Switch
- Factory installed on air/fuel intake assembly
- Provides protection from abnormal operating conditions
- Automatic reset

Limit Control
- Primary limit is accurately located on vestibule panel on all units
- Automatic reset

Optional Accessories

Natural Gas to LPG/Propane Conversion Kit (60K and 80K Input Furnaces Only)
- Required for field changeover from natural gas to LPG/Propane
- Includes gas and air orifices

Muffler (US Only)
- Significantly reduces outdoor operating sound levels
- Installed vertically in the exhaust piping
- See Optional Accessory Dimension Drawing

NOTE - Two-inch muffler is optional for the 100 input model with a maximum vent pipe length of up to 29 ft.
Three-inch diameter muffler is optional for 100 input model.

NOTE - Three-inch muffler is optional for the 100 input model with a minimum vent pipe length of 30 ft.

DIRECT VENT / NON-DIRECT VENT SEALED COMBUSTION SYSTEM

- Furnace features a "sealed combustion" system and can be installed in either Direct Vent or Non-Direct applications
- In Direct Vent applications, combustion air is supplied from outdoors and flue gases are discharged outdoors
- In Non-Direct Vent applications, combustion air is supplied from indoors and flue gases are discharged outdoors

NOTE - Lennox has approved the use of DuraVent® PolyPro® and Centrotherm InnoFlue® manufactured vent pipe and terminations as an alternative to PVC vent pipe. Must be ordered separately.
Tested and listed to the ULC S636 standard in Canada.

NOTE - The polypropylene venting system must follow the uninsulated and unconditioned space vent lengths listed in the table on 12. Refer to the Installation Instructions for additional details.

Optional Accessories

Flue Coupling
- Assists with exhaust flue piping connection and servicing
- Includes flexible one 2-inch rubber coupling and two adjustable bands
- Approved for all Lennox 90% furnaces

Vent Termination Kits
- Facilitates installation of combustion air intake pipe and flue exhaust pipe
- Refer to venting table in this bulletin to determine pipe size needed and proper termination kit required
- See Optional Accessories table and dimension drawings

Concentric Termination Kit - Direct Vent Applications
- 2 or 3 inch kit contains concentric termination assembly, reducer bushing and 45° elbow
- 2 inch kit for -070 model contains an outdoor exhaust accelerator
- Kit requires single hole penetration of roof or wall for installation
- Roof Termination Flashing Kit available for use 2 inch Kits
- CSA certified

Flush-Mount Termination Kit
- Kit contains flush-mount termination, accelerator, mounting template and hardware
- Kit may be used with 2, 2-1/2, or 3 inch pipe

DIRECT VENT / NON-DIRECT VENT SEALED COMBUSTION SYSTEM (continued)

Optional Accessories (continued)

Wall Assembly Termination Kits

Close Couple (US Only) - Direct Vent Applications

- 2 or 3 inch kit consists of close-couple, side-by-side PVC piping with galvanized steel wall cover plate for
- Seals and isolates intake and exhaust piping penetration of wall
- Piping spacing and length is sized for proper wall installations
- CSA certified

Close Couple WTK (Canada Only) - Direct Vent Applications

- 2 or 3 inch kit contains one insulated faceplate, one insulated exhaust pipe, elbow and fittings

NOTE - Maintain a maximum of 6 inches between the inlet and outlet openings in the installation of the pipes.

Roof Termination Flashing Kit

- For vertical venting through a roof
- 2 or 3 inch kit contains two neoprene rubber roof flashings
- Vent pipe and insulation not furnished
- Flashing Kit can also be used with Concentric Vent Termination Kits used in vertical venting rooftop applications

CONTROLS

7 SureLight® Integrated Furnace Control

- Contains all necessary controls and relays to operate furnace
- Combustion air inducer is operated by the integrated furnace control
- Prior to ignition, a pre-purge cycle for 15 seconds is initiated
- After the main burners are turned off, a post-purge cycle for 5 seconds is run
- Flame sensor assures safe and reliable operation
- Should loss of flame occur, the integrated furnace control will initiate 4 re-attempts at ignition before locking out unit operation for 60 minutes
- Watchguard type circuit automatically resets ignition controls after one hour of continuous thermostat demand after unit lockout, eliminating nuisance calls for service
- Fan control consists of adjustable blower timed-off delay (60, 90, 120, 180 seconds - factory setting 90 seconds) and fixed blower timed-on delay (30 seconds heating, 2 seconds cooling)
- Blower is automatically energized on thermostat demand for cooling demand (air conditioners)
- Two Accessory Terminals - Furnished for additional power supply requirements for 120 volt (less than 1 amp) power humidifiers and powered air cleaners
- One Additional Accessory Terminal - Furnished for power supply requirements for 24V (less than 0.5 amp) low voltage accessories.
- Ignition control has a single red LED to indicate status and as an aid in troubleshooting
- Last ten codes are stored in non-volatile memory (accessible by recall button on control) for servicing

24 Volt Transformer (40VA)

- Furnished and factory installed on outside of control box
- Circuit breaker (furnished) is wired in series

Field Wiring Make-Up Box

- Furnished for line voltage wiring
- Factory installed internally on left side of furnace
- Box may be installed internally on right side of furnace

CONTROLS (continued)

Optional Accessories

Blower Relay Kit
(For Use With Two-Stage Outdoor Units)
- Allows furnace blower speed changes when matched with two-stage air conditioners or heat pumps.

E30 Smart Wi-Fi Thermostat
- Wi-Fi enabled, electronic 7-day, universal, multi-stage, programmable, touchscreen thermostat
- 3 Heat/2 Cool
- Auto-changeover
- Controls dehumidification during cooling mode and humidification during heating mode

- Offers enhanced capabilities including humidification / dehumidification / dewpoint measurement and control, Humiditrol® control, and equipment maintenance reminders
- Easy to read 7 in. color touchscreen (measured diagonally)
- LCD display with backlight shows the current and set temperature, time, inside relative humidity, system status (operating mode and schedules) and outside temperature (optional outdoor sensor required)
- Smooth Setback Recovery starts system early to achieve setpoint at start of program period
- Compressor short-cycle protection (5 minutes)
- Up to four separate schedules are available plus Schedule IQ™
- One-Touch Away Mode - A quick and easy way to set the cooling and heating setpoints while away
- Smart Away™ - Uses geo-fencing technology to determine when the homeowner is within a predetermined distance from the home to operate the system when leaving, away and arriving
- Wi-Fi remote monitoring and adjustment through a home wireless network for desktop PCs, laptops and apps for smartphones or tablets
- Smart home automation compatible with Apple HomeKit™, Amazon Alexa®, Google Assistant and IFTTT
- Service Dashboard features online real-time monitoring of installed Lennox® thermostats
- High Definition Color Display with Subbase, Smart Hub Controller, wallplate (for retrofit installations) furnished for easy installation
- See the Lennox® E30 Smart Wi-Fi Thermostat Product Specifications bulletin for more information

Remote Outdoor Temperature Sensor
- Used with the Lennox® E30 Smart Wi-Fi Thermostat
- When installed outdoors, sensor allows thermostat to display outdoor temperature

NOTE - Sensor is required for Enhanced Dehumidification Control (EDA) applications.

Thermostat
- Thermostat is not furnished with unit
- See Lennox Price Book for selection

Furnace Twinning Panel
- Required to operate two identical furnaces simultaneously from a single thermostat
- For single stage conventional (1 heat/1 cool), multi-stage conventional (2 heat/2 cool) and heat pump (3 heat/2 cool) equipment
- Can be used with common or separate ducted systems
- Contains PC Control Board with terminal strip connections for thermostat and HVAC equipment
- LEDs indicate system operating status
- Uses standard 18-gauge thermostat wire
- Power Supply: 24 VAC, 40VA (transformer not furnished)
- Mounting base with hardware furnished
- Dimensions (H x W x D): 10 x 5 x 2 in.

NOTE - Only identical furnaces should be twinned in order to ensure that both furnace blowers start at the same time. If furnaces are not identical, back draft dampers can be installed in either the supply or return duct.

Up to four identical furnaces can be twinned. Requires two panels that are wired together.

Furnace Twinning Kit
- Required to operate two furnaces simultaneously
- Kit consists of twinning relays, quick connect terminals and mounting hardware
- Used for single-stage heating/single-stage cooling with a single-stage thermostat

Transformer (75VA)
- Recommended when furnace is used with zoning or defrost thermostats and other 24V accessories requiring a higher VA rating
- Circuit breaker (furnished) is wired in series
- Replaces the standard 40VA transformer

BLOWER

- Direct drive blower
- Statically and dynamically balanced
- Resiliently mounted
- Blower assembly easily removed for servicing

8 Power Saver™ Constant Torque Blower Motor
- DC Brushless Motor
- High Efficiency Constant Torque
- ECM (Electronically Commutated Motor)
- Motor is programmed to provide constant torque at each of the selectable speeds
- Motor is controlled by the Integrated Furnace Control
- Blower speeds are easily changed on the integrated furnace control. See Blower Data tables

FEATURES

CABINET

- Low-profile, narrow width allows easy installation
- Heavy-gauge, cold rolled steel construction
- Pre-painted cabinet finish
- Flanges provided on supply air opening for ease of plenum connection or alignment with indoor coil
- 9 Insulated with foil faced insulation on sides and back of heating compartment and mat faced insulation in blower compartment
- Sealed blower compartment
- Inner blower compartment access panel seals blower compartment from air leakage
- Cabinet door can be removed without any tools
- Complete service access
- 10 Safety interlock switch automatically shuts off power to unit when blower compartment access door is removed
- 11 Gas piping inlet is provided on right side of cabinet
- Electrical inlets are provided on both sides of cabinet.

Bottom/Side Return Air Entry

- Upflow/horizontal with bottom return air entry:
  - Remove furnished bottom seal panel from cabinet
- Upflow only with side return-air entry:
  - Corners are marked on either side of cabinet for return air cut-out
- See dimension drawings

NOTE - 60C size units that require air volumes over 1800 cfm must have one of the following:

- Single side return air and Optional Return Air Base with transition that must accommodate required 20 x 25 x 1 inch air filter to maintain proper velocity
- Bottom return air
- Return air from both sides
- Bottom and one side return air
- See Blower Performance Tables for additional information

Coil Match-Up

- All furnaces exactly match Lennox cased upflow indoor coils and horizontal indoor coils with same letter designation (A, B, C, D) in model number
- No adaptor required
- Engaging holes furnished on cabinet for alignment
- Lennox uncased coils match furnaces without any overhang but require an optional adaptor base or field fabricated transition to match furnace opening
- See coil bulletin for additional information

Low Leakage Cabinet

- All models have less than 2% air leakage
- Meets ANSI/ASHRAE Standard 193-2010 “Method of Test for Determining the Air Tightness of HVAC Equipment”

Optional Accessories

Condensate Drain Heat Cable Kits

- Self-limiting wattage heat cable prevents condensate drain from freezing in unconditioned areas
- Available in 6 or 24 ft. lengths

Horizontal Suspension Kit

- Provides suspension of unit and indoor coil in horizontal applications
- Allows complete service access
- Consists of corner mounted hanging brackets with vibration isolators, return air end support rail and hardware for assembly
- Metal hanging straps must be field provided

Crawl Space Vent Drain Kit

- Allows venting through a crawl space for upflow and horizontal applications
- Kit for Canada is certified to ULC S636
- Includes 2 or 3 inch sanitary tee, 2 inch PVC assembly, PVC boot and clamp
- Kit for Canada is certified to ULC S636

Return Air Base

NOTE - On furnaces with side return air and condensate trap on the same side of the cabinet, a field fabricated transition or Return Air Base is required when using an IAQ product higher than 14-3/16 inches installed next to the unit and serviced from the front. IAQ products higher than 20 inches require a field fabricated transition.

NOTE - Must be used for 60C size models with air volumes over 1800 cfm in upflow applications when only one side return is required.

- Cabinet is shipped flat for easy field assembly
- Pre-painted steel to match the furnace
- See Dimension Drawing

High Performance Economizer
(Commercial Applications Only)

- Designed for applications requiring outdoor air to be utilized in a commercial HVAC system
- Allows the entry of fresh outdoor air for free cooling, reducing the requirement for mechanical cooling
- Heavy gauge galvanized steel cabinet lined with thick fiberglass insulation
- Mixed air sensor, outdoor air sensor and 24VAC transformer furnished
- Approved for California Title 24 building standards. ASHRAE 90.1-2010 compliant
- See separate Product Specifications bulletin for additional information and available control and sensor options

FEATURES

FILTER (not furnished)

- Filter and provisions for external mounting must be field provided

Optional Accessories

Air Filter and Rack Kit for Horizontal Return Air (End) Applications

- Washable or vacuum cleanable polyurethane frame type filter and external end return air rack
- Rack has filter door for servicing
- Flanges on rack for duct connection
- Field installed
- See dimension drawing

Air Filter and Rack Kit for Upflow Side Return Air
NOTE - Not for use with Return Air Base

- Washable or vacuum cleanable polyurethane frame type filter and external side return air rack available for field installation
- Available in single and ten pack kits
- Rack has filter door for servicing
- Flanges on rack for duct connection
- Field installs on either side of unit cabinet
- See dimension drawing

REFRIGERATION DETECTION SYSTEM (RDS)

Optional Accessories

Refrigerant Detection System (RDS) Coil Sensor Kit

- Complies with UL 60335-2-40 approved standard
- Required for field installation for all systems using R-454B refrigerant if sensor is not furnished with coil
- Consists of Refrigerant Detection System (RDS) sensor, lineset sleeves, mounting brackets and A2L labeling
- Sensor ensures safe operation for systems equipped with R-454B refrigerant
- Sensor will detect anu R-454B refrigerant

Refrigerant Detection System (RDS) Blower Control Board

Communicating Blower Control Board (Universal)

- Communicating Blower Control Board and Sensor can be used universally with any Lennox® communicating furnace or any non-communicating 24 volt furnace

Non-Communicating Blower Control Board

- Non-Communicating Blower Control Board and Sensor can be used with any non-communicating 24 volt furnace

Standard Features

- Complies with UL 60335-2-40 approved standard
- Required for all systems using R-454B refrigerant
- Connects to the RDS sensor furnished with the RDS Coil Sensor Kit
- Supports up to two RDS Sensors (factory setting)
- Used as an interface between indoor unit and thermostat to control system
- Ensures safe operation for systems equipped with R-454B refrigerant
- If R-454B refrigerant is detected, the refrigerant detection system will stop compressor and/or heating operating and operate the blower to reduce concentrations in the conditioned space
- Once safe levels are reached the HVAC system will resume normal operation
- Multi-color LED for system status and as an aid in troubleshooting
  - Flashing LED codes for system status (Green/Blue) and diagnosing Sensor errors (Red)
- Alarm relay can trigger an external alarm if R-454B refrigerant is detected
- Zone relay opens all zone dampers (if part of a zoning system) if R-454B refrigerant is detected
- Power is disabled to non-communicating thermostats to prevent demand if R-454B refrigerant is detected
- On system start-up blower will run for five minutes and any thermostat demands are disabled
- Dimensions (H x W x D): 7-7/16 x 7-7/16 x 2-1/2 (189 x 189 x 127 mm)

NOTE - See Refrigerant Detection System (RDS) Components Table on page 12.

See the CK40 Indoor Coil Product Specifications bulletins for more information.

Refer to the Installation Instructions for additional information.

SPECIFICATIONS

Gas Heating Performance	**Model No.**	**EL195UH040NE36B**	**EL195UH060NE36B**
	AHRI Ref. No.	201834895	201834898
	[1] AFUE	95%	95%
	Input - Btuh	40,000	60,000
	Output - Btuh	39,000	58,000
	Temperature rise range - °F	30 - 60	35 - 65
	Gas Manifold Pressure (in. w.g.) Nat. Gas / LPG/Propane	3.5 / N/A	3.5 / 4.0
	High static - in. w.g.	0.5	0.5
Energy Star® Certified		Yes	Yes
Connections in.	Intake / Exhaust Pipe (PVC)	2 / 2	2 / 2
	Gas pipe size IPS	1/2	1/2
	Condensate Drain Trap (PVC pipe) - i.d.	3/4	3/4
	with furnished 90° street elbow	3/4 slip x 3/4 Mipt	3/4 slip x 3/4 Mipt
	with field supplied (PVC coupling) - o.d.	3/4 slip x 3/4 MPT	3/4 slip x 3/4 MPT
Indoor Blower	Wheel nom. dia. x width - in.	10 x 8	10 x 8
	Motor Type	DC Brushless	DC Brushless
	Motor output - hp	1/2	1/2
	Tons of add-on cooling	1 - 2	1.5 - 3
	Air Volume Range - cfm	260 - 990	550 - 1380
Electrical Data	Voltage	120 volts - 60 hertz - 1 phase	
	Blower motor full load amps	6.8	6.8
	Maximum overcurrent protection	15	15
Shipping Data	lbs. - 1 package	122	128

NOTE - Filters and provisions for mounting are not furnished and must be field provided.

[1] Annual Fuel Utilization Efficiency based on DOE test procedures and according to FTC labeling regulations. Isolated combustion system rating for non-weatherized furnaces.

SPECIFICATIONS

Gas Heating Performance	**Model No.**	**EL195UH080NE48C**	**EL195UH100NE60C**
	AHRI Ref. No.	201834896	201834897
	[1] AFUE	95%	95%
	Input - Btuh	80,000	100,000
	Output - Btuh	78,000	97,000
	Temperature rise range - °F	40 - 70	45 - 75
	Gas Manifold Pressure (in. w.g.) Nat. Gas / LPG/Propane	3.5 / 4.0	3.5 / N/A
	High static - in. w.g.	0.5	0.5
Energy Star® Certified		Yes	Yes
Connections in.	Intake / Exhaust Pipe (PVC)	2 / 2	2 / 2
	Gas pipe size IPS	1/2	1/2
	Condensate Drain Trap (PVC pipe) - i.d.	3/4	3/4
	with furnished 90° street elbow	3/4 slip x 3/4 Mipt	3/4 slip x 3/4 Mipt
	with field supplied (PVC coupling) - o.d.	3/4 slip x 3/4 MPT	3/4 slip x 3/4 MPT
Indoor Blower	Wheel nom. dia. x width - in.	10 x 10	11-1/2 x 10
	Motor Type	DC Brushless	DC Brushless
	Motor output - hp	3/4	1
	Tons of add-on cooling	2.5 - 4	3.5 - 5
	Air Volume Range - cfm	760 - 1740	1260 - 2405
Electrical Data	Voltage	120 volts - 60 hertz - 1 phase	
	Blower motor full load amps	8.4	10.9
	Maximum overcurrent protection	15	15
Shipping Data	lbs. - 1 package	148	157

NOTE - Filters and provisions for mounting are not furnished and must be field provided.

[1] Annual Fuel Utilization Efficiency based on DOE test procedures and according to FTC labeling regulations. Isolated combustion system rating for non-weatherized furnaces.

OPTIONAL ACCESSORIES - ORDER SEPARATELY

			"B" Width Models	"C" Width Models
CABINET ACCESSORIES				
Horizontal Suspension Kit - Horizontal only			**51W10**	**51W10**
Return Air Base - Upflow only			**50W98**	**50W99**
High Performance Economizer (Commercial Only)			**10U53**	**10U53**
CONDENSATE DRAIN KITS				
Condensate Drain Heat Cable		6 ft.	**26K68**	**26K68**
		24 ft.	**26K69**	**26K69**
Crawl Space Vent Drain Kit		US	**51W18**	**51W18**
		Canada	**15Z70**	**15Z70**
CONTROLS				
Blower Relay Kit (for two-stage outdoor units)			**85W66**	**85W66**
Furnace Twinning Panel			**Y3653**	**Y3653**
Furnace Twinning Kit			**16W72**	**16W72**
Transformer (75VA)			**27J32**	**27J32**
E30 Smart Wi-Fi Thermostat			**20A65**	**20A65**
Remote Outdoor Temperature Sensor			**X2658**	**X2658**
FILTER KITS				
[1] **Air Filter and Rack Kit**	Horizontal (end)		**87L96**	**87L97**
		Size of filter - in.	18 x 25 x 1	20 x 25 x 1
	Side Return	Single	**44J22**	**44J22**
		Ten Pack	**66K63**	**66K63**
		Size of filter - in.	16 x 25 x 1	16 x 25 x 1
TERMINATION KITS				
See Installation Instructions for specific venting information.				
Direct Vent	Concentric	US - 2 in.	**71M80**	**69M29**
		3 in.	**- - -**	**60L46**
		Canada - 2 in.	**44W92**	**44W92**
		3 in.	**- - -**	**44W93**
	Flush-Mount	US - 2, 2-1/2 or 3 in.	**51W11**	**51W11**
		Canada - 2, 2-1/2 or 3 in.	**51W12**	**51W12**
	Wall - Close Couple	US - 2 in.	**22G44**	**- - -**
		3 in.	**44J40**	**44J40**
	Wall - Close Couple WTK	Canada - 2 in.	**30G28**	**- - -**
		3 in.	**81J20**	**81J20**
	Roof Termination Flashing Kit (no vent pipe - 2 flashings)	2 in.	**15F75**	**15F75**
		3 in.	**44J41**	**44J41**
VENTING				
Flue Coupling		2 in.	**17H92**	**17H92**

[1] Cleanable polyurethane frame type filter.

NOTE - Termination Kits (**44W92**, **44W93**, **30G28**, **51W12**, **81J20**) and Crawl Space Vent Drain Kit (**15Z70**) are certified to ULC S636 standard for use in Canada only.

GAS HEAT ACCESSORIES

Input	Natural Gas to LPG/Propane Kit
	0 - 7500 ft.
040	**N/A**
060	**19K05**
080	**19K06**
100	**N/A**

NOTE - Natural Gas to LPG/Propane Kit is not available for 40K and 100K Input furnaces.

REFRIGERANT DETECTION SYSTEM (RDS) COMPONENTS

Description		Order No.
Refrigerant Detection System (RDS) Coil Sensor Kit		**26Z69**
Refrigerant Detection System (RDS) Blower Control Board	Any Lennox® Communicating Furnace or any Non-Communicating 24V Furnace (Universal)	**27A03**
	Any Non-Communicating 24V Furnace	**27A02**

NOTE - Communicating Blower Control Board and Sensor can be used universally with Lennox® communicating furnace or any non-communicating 24 volt furnace.
Non-Communicating Blower Control Board and Sensor can be used with any non-communicating 24 volt furnace.

HIGH ALTITUDE OPERATION

NOTE - Units may be installed at altitudes up to 7500 ft. above sea level.

OUTDOOR TERMINATION KIT USAGE

Input Size	Vent Pipe Diameter (in.)	Standard Terminations				Concentric Terminations			Muffler
		Flush Mount Kit	Wall Kit		Field Fabricated Exhaust Accelerator Size Required	Concentric Kit			
			2 inch	3 inch		1-1/2 inch	2 inch	3 inch	2 inch/ 3 inch
		51W11 (US) [4] 51W12 (CA)	22G44 (US) [4] 30G28 (CA)	44J40 (US) [4] 81J20 (CA)		71M80 (US) [4] 44W92 (CA)	69M29 (US) [4] 44W92 (CA)	60L46 (US) [4] 44W93 (CA)	15Y66 (US)/ 16A56 (US)
040	2	[3] YES	YES	[1] YES	1-1/2 in.	[2] YES	- - -	- - -	YES
	3	[3] YES	YES	[1] YES	1-1/2 in.	[2] YES	- - -	- - -	YES
060	2	[3] YES	YES	[1] YES	1-1/2 in.	[2] YES	- - -	- - -	YES
	3	[3] YES	YES	[1] YES	1-1/2 in.	[2] YES	- - -	- - -	YES
080	2	[3] YES	- - -	YES	2 in.	- - -	YES	YES	YES
	3	[3] YES	- - -	YES	2 in.	- - -	YES	YES	YES
100	2	YES	- - -	YES	2 in.	- - -	YES	YES	[5] YES
	3	YES	- - -	YES	2 in.	- - -	YES	YES	[5] YES

NOTE - Standard Terminations do not include any vent pipe or elbows external to the structure.
Any vent pipe or elbows external to the structure must be included in total vent length calculations. See Vent Length Tables.

[1] Requires field provided 1-1/2 in. outdoor exhaust accelerator.

[2] Concentric Kits **71M80** and **44W92** include 1-1/2 in. outdoor exhaust accelerator, required when used with 040 and 060 input models. Accelerator is not used with 080 or 100 input models.

[3] Flush Mount Kit **51W11** and **51W12** includes 1-1/2 in. outdoor exhaust accelerator, required when used with 040, 060 and 080 input models. Accelerator is not used with 100 input models.

[4] Termination Kits 30G28, **44W92**, **44W93**, **51W12** and **81J20** are certified to ULC S636 standard for use in Canada only.

[5] Two-inch diameter muffler **15Y66** is optional for 100 input model with a maximum vent pipe length of up to 29 ft.
Three-inch diameter muffler **16A56** is optional for 100 input model with a minimum vent pipe length of 30 ft.

VENT LENGTHS - UNINSULATED EXHAUST PIPE IN UNCONDITIONED SPACE

[1] Winter Design Temperatures	Vent Pipe Diameter	Unit Input Size							
		040		060		080		100	
		Maximum Un-Insulated Exhaust Vent Length (ft.)							
		PVC	PolyPro InnoFlue	PVC	PolyPro InnoFlue	PVC	PolyPro InnoFlue	PVC	PolyPro InnoFlue
32 to 21°F	2 in.	18	16	31	28	50	48	30	30
	3 in.	9	9	18	18	35	35	47	47
20 to 1°F	2 in.	9	8	18	16	32	29	30	30
	3 in.	N/A	N/A	8	8	19	19	26	26
0 to –20°F	2 in.	5	N/A	12	10	22	19	30	27
	3 in.	N/A	N/A	N/A	N/A	10	10	16	16

NOTE - Concentric terminations are equivalent to 5 ft. of straight pipe and should be included when measuring total pipe length.

[1] Refer to 99% Minimum Design Temperature table provided in the current edition of ASHRAE Handbook-Fundamentals.

PolyPro® poly-propylene vent pipe is a registered trademark of DuraVent®.

Innoflue® is a registered trademark of Centrotherm Eco Systems.

VENT LENGTHS

STANDARD TERMINATION AT ELEVATION 0 - 4500 FT.

	Pipe Size	2 in.				3 in.			
	Input	040	060	080	100	040	060	080	100
No. of 90 ELL	1	81	66	44	44	138	137	118	118
	2	76	61	39	39	133	132	113	113
	3	71	56	34	34	128	127	108	108
	4	66	51	29	29	123	122	103	103
	5	61	46	24	24	118	117	98	98
	6	56	41	19	19	113	112	93	93
	7	51	36	14	14	108	107	88	88
	8	46	31	N/A	N/A	103	102	83	83
	9	41	26	N/A	N/A	98	97	78	78
	10	36	21	N/A	N/A	93	92	73	73

STANDARD TERMINATION AT ELEVATION 4501 - 7500 FT.

	Pipe Size	2 in.				3 in.			
	Input	040	060	080	100	040	060	080	100
No. of 90 ELL	1	81	41	34	9	138	105	100	65
	2	76	36	29	N/A	133	100	95	60
	3	71	31	24	N/A	128	95	90	55
	4	66	26	19	N/A	123	90	85	50
	5	61	21	14	N/A	118	85	80	45
	6	56	16	9	N/A	113	80	75	40
	7	51	11	N/A	N/A	108	75	70	35
	8	46	N/A	N/A	N/A	103	70	65	30
	9	41	N/A	N/A	N/A	98	65	60	25
	10	36	N/A	N/A	N/A	93	60	55	20

CONCENTRIC TERMINATION AT ELEVATION 0 - 4500 FT.

	Pipe Size	2 in.				3 in.			
	Input	040	060	080	100	040	060	080	100
No. of 90 ELL	1	73	58	42	42	121	121	114	114
	2	68	53	37	37	116	116	109	109
	3	63	48	32	32	111	111	104	104
	4	58	43	27	27	106	106	99	99
	5	53	38	22	22	101	101	94	94
	6	48	33	17	17	96	96	89	89
	7	43	28	12	12	91	91	84	84
	8	38	23	N/A	N/A	86	86	79	79
	9	33	18	N/A	N/A	81	81	74	74
	10	28	13	N/A	N/A	76	76	69	69

CONCENTRIC TERMINATION AT ELEVATION 4501 - 7500 FT.

	Pipe Size	2 in.				3 in.			
	Input	040	060	080	100	040	060	080	100
No. of 90 ELL	1	73	33	32	N/A	121	89	89	61
	2	68	28	27	N/A	116	84	84	56
	3	63	23	22	N/A	111	79	79	51
	4	58	18	17	N/A	106	74	74	46
	5	53	13	12	N/A	101	69	69	41
	6	48	N/A	N/A	N/A	96	64	64	36
	7	43	N/A	N/A	N/A	91	59	59	31
	8	38	N/A	N/A	N/A	86	54	54	26
	9	33	N/A	N/A	N/A	81	49	49	21
	10	28	N/A	N/A	N/A	76	44	44	16

VENT LENGTHS (EXHAUST) - VENTILATED ATTIC OR CRAWLSPACE INTAKE AIR - FEET

STANDARD TERMINATION AT ELEVATION 0 - 4500 FT.

	Pipe Size	2 in.				3 in.			
	Input	040	060	080	100	040	060	080	100
No. of 90 ELL	1	71	56	34	14	118	117	98	98
	2	66	51	29	9	113	112	93	93
	3	61	46	24	4	108	107	88	88
	4	56	41	19	N/A	103	102	83	83
	5	51	36	14	N/A	98	97	78	78
	6	46	31	9	N/A	93	92	73	73
	7	41	26	4	N/A	88	87	68	68
	8	36	21	N/A	N/A	83	82	63	63
	9	31	16	N/A	N/A	78	77	58	58
	10	26	11	N/A	N/A	73	72	53	53

STANDARD TERMINATION AT ELEVATION 4501 - 7500 FT.

	Pipe Size	2 in.				3 in.			
	Input	040	060	080	100	040	060	080	100
No. of 90 ELL	1	71	31	24	N/A	118	85	80	45
	2	66	26	19	N/A	113	80	75	40
	3	61	21	14	N/A	108	75	70	35
	4	56	16	9	N/A	103	70	65	30
	5	51	11	N/A	N/A	98	65	60	25
	6	46	N/A	N/A	N/A	93	60	55	20
	7	41	N/A	N/A	N/A	88	55	50	15
	8	36	N/A	N/A	N/A	83	50	45	10
	9	31	N/A	N/A	N/A	78	45	40	N/A
	10	26	N/A	N/A	N/A	73	40	35	N/A

INSTALLATION CLEARANCES

Sides	[1] 1 inches (25 mm)
Rear	1 inches (25 mm)
Top/Plenum	1 inch (25 mm)
Front	1 inches (25 mm)
Front (service/alcove)	24 inches (610 mm)
Floor	[2] Combustible

NOTE − Air for combustion must conform to the methods outlined in the National Fuel Gas Code (NFPA 54/ANSI−Z223.1) or the National Standard of Canada CAN/CSA−B149.1 Natural Gas and Propane Installation Code".

NOTE − In the U.S. flue sizing must conform to the methods outlined in the current National Fuel Gas Code (NFPA 54/ANSI−Z223.1) or applicable provisions of local building codes. In Canada flue sizing must conform to the methods outlined in National Standard of Canada CAN/CSA−B149.1.

[1] Allow proper clearances to accommodate condensate trap and vent pipe installation.

[2] Do not install the furnace directly on carpeting, tile, or other combustible materials other than wood flooring.

BLOWER DATA

EL195UH040NE36B PERFORMANCE (Less Filter)

External Static Pressure in. w.g.	Air Volume / Watts at Various Blower Speeds									
	High (Black)		Medium-High (Brown)		Medium (Blue)		Medium-Low (Yellow)		Low (Red)	
	cfm	Watts	cfm	Watts	cfm	Watts	cfm	Watts	cfm	Watts
0.00	1442	349	1283	243	1186	189	954	107	921	88
0.10	1413	358	1257	255	1155	202	914	114	871	97
0.20	1385	366	1231	267	1124	214	875	120	820	106
0.30	1354	383	1199	277	1091	223	832	130	776	114
0.40	1336	396	1171	289	1062	232	791	137	740	124
0.50	1280	392	1140	301	1019	244	751	148	684	131
0.60	1211	375	1111	307	985	254	702	158	642	140
0.70	1129	351	1071	323	959	263	658	163	589	147
0.80	1009	319	996	309	917	275	613	172	555	151
0.90	846	273	858	273	812	259	575	178	509	158
1.00	730	246	719	245	702	236	530	185	466	166

EL195UH060NE36B PERFORMANCE (Less Filter)

External Static Pressure in. w.g.	Air Volume / Watts at Various Blower Speeds									
	High (Black)		Medium-High (Brown)		Medium (Blue)		Medium-Low (Yellow)		Low (Red)	
	cfm	Watts	cfm	Watts	cfm	Watts	cfm	Watts	cfm	Watts
0.00	1437	327	1283	240	1172	183	942	100	899	90
0.10	1416	339	1253	249	1145	194	904	109	856	96
0.20	1395	351	1223	258	1118	205	865	118	812	103
0.30	1369	364	1198	270	1083	212	830	127	777	111
0.40	1342	377	1169	279	1055	222	793	134	744	117
0.50	1321	384	1141	289	1024	230	756	143	698	126
0.60	1292	396	1117	300	996	242	718	151	664	133
0.70	1246	395	1091	307	965	251	673	157	615	142
0.80	1179	376	1065	316	934	262	635	164	576	147
0.90	1082	349	1020	323	906	267	594	171	533	155
1.00	975	318	927	300	875	275	565	177	504	161

EL195UH080NE48C PERFORMANCE (Less Filter)

External Static Pressure in. w.g.	Air Volume / Watts at Various Blower Speeds									
	High (Black)		Medium-High (Brown)		Medium (Blue)		Medium-Low (Yellow)		Low (Red)	
	cfm	Watts	cfm	Watts	cfm	Watts	cfm	Watts	cfm	Watts
0.00	1680	385	1464	270	1342	208	1271	174	1152	141
0.10	1651	400	1441	286	1314	225	1236	189	1114	151
0.20	1622	414	1419	303	1286	241	1201	204	1077	160
0.30	1603	433	1386	316	1253	254	1163	217	1038	174
0.40	1581	452	1355	331	1222	265	1122	229	996	184
0.50	1548	467	1322	347	1182	278	1094	240	948	193
0.60	1522	479	1293	358	1157	290	1053	252	908	203
0.70	1441	465	1258	371	1104	304	1011	264	876	212
0.80	1341	435	1211	382	1083	312	984	271	827	222
0.90	1228	403	1159	372	1037	324	938	281	799	230
1.00	1132	377	1034	342	987	323	913	291	769	239

EL195UH100NE60C PERFORMANCE (Less Filter)

External Static Pressure in. w.g.	Air Volume / Watts at Different Blower Speeds																			
	Bottom Return Air, Side Return Air with Return Air from Both Sides or Return Air from Bottom and One Side.										**Single Side Return Air** − Air volumes in **bold** (over 1800 cfm) require Optional Return Air Base and field fabricated transition to accommodate 20 x 25 x 1 in. air filter in order to maintain proper air velocity.									
	High (Black)		**Medium-High** (Brown)		**Medium** (Blue)		**Medium-Low** (Yellow)		**Low** (Red)		**High** (Black)		**Medium-High** (Brown)		**Medium** (Blue)		**Medium-Low** (Yellow)		**Low** (Red)	
	cfm	**Watts**	**cfm**	**Watts**	**cfm**	**Watts**	**cfm**	**Watts**	**cfm**	**Watts**	**cfm**	**Watts**	**cfm**	**Watts**	**cfm**	**Watts**	**cfm**	**Watts**	**cfm**	**Watts**
0.00	2093	665	1851	453	1704	348	1597	293	1436	212	**2081**	**658**	**1909**	**450**	1684	355	1565	284	1404	208
0.10	2064	683	1822	466	1662	363	1559	306	1387	222	**2045**	**678**	**1837**	**466**	1648	366	1527	300	1358	218
0.20	2034	700	1793	480	1621	379	1520	318	1337	233	**2009**	**698**	1765	482	1611	377	1489	315	1313	228
0.30	1997	715	1750	497	1587	390	1479	330	1297	244	**1981**	**713**	1737	497	1574	391	1448	327	1270	240
0.40	1967	730	1719	513	1548	402	1447	341	1254	254	**1954**	**729**	1701	508	1535	402	1419	337	1224	251
0.50	1940	739	1682	525	1514	415	1400	354	1205	266	**1915**	**740**	1663	522	1501	414	1378	349	1186	261
0.60	1867	729	1649	537	1469	428	1362	364	1162	275	**1859**	**731**	1625	538	1457	428	1338	360	1139	273
0.70	1794	701	1615	552	1441	436	1326	375	1125	285	1787	706	1596	550	1418	438	1298	367	1090	284
0.80	1706	668	1581	567	1399	451	1280	387	1077	295	1697	674	1553	565	1383	452	1262	383	1065	288
0.90	1596	624	1532	574	1366	463	1249	397	1039	301	1604	635	1524	572	1344	463	1223	395	1017	302
1.00	1490	584	1455	554	1329	474	1210	407	993	312	1482	586	1444	552	1318	475	1183	406	973	310

[1] NOTE - 60C size units that require air volumes over 1800 cfm must have one of the following:
1. Single side return air and Optional Return Air Base with transition that must accommodate required 20 x 25 x 1 inch (508 x 635 x 25 mm) air filter to maintain proper velocity.
2. Bottom return air.
3. Return air from both sides.
4. Bottom and one side return air.

See Blower Performance Tables for additional information.

[2] Optional Side Return Air Filter Kit is not for use with the Optional Return Air Base.

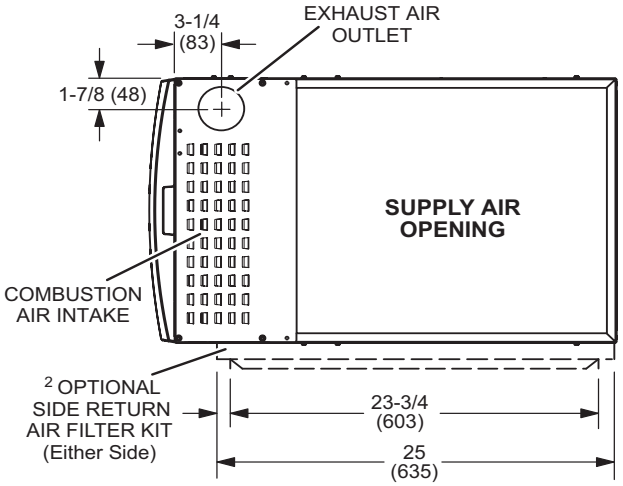

TOP VIEW

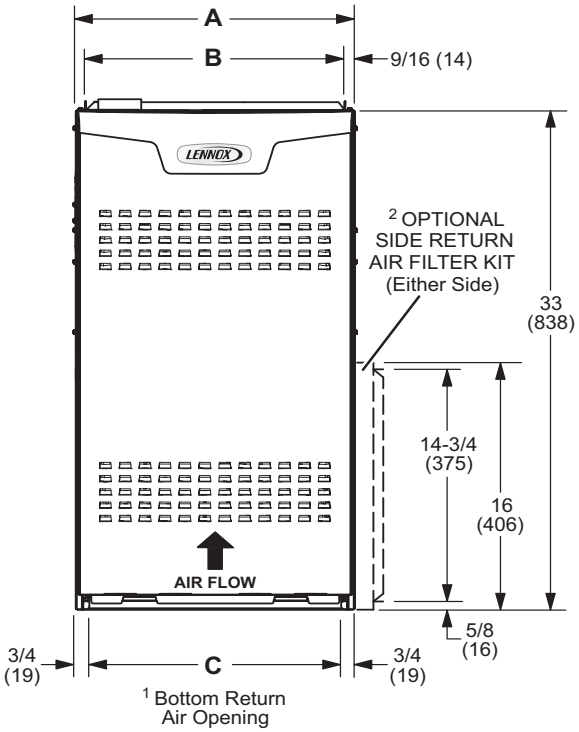

FRONT VIEW

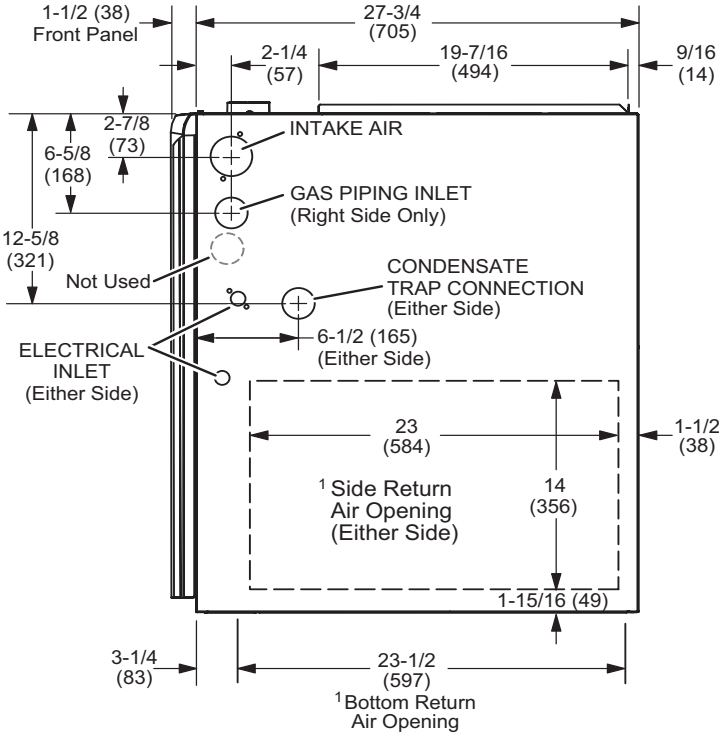

SIDE VIEW

Model No.	A		B		C	
	in.	mm	in.	mm	in.	mm
EL195UH040NE36B EL195UH060NE36B	17-1/2	445	16-3/8	416	16	406
EL195UH080NE48C EL195UH100NE60C	21	533	19-7/8	505	19-1/2	495

LEFT-HAND AIR DISCHARGE

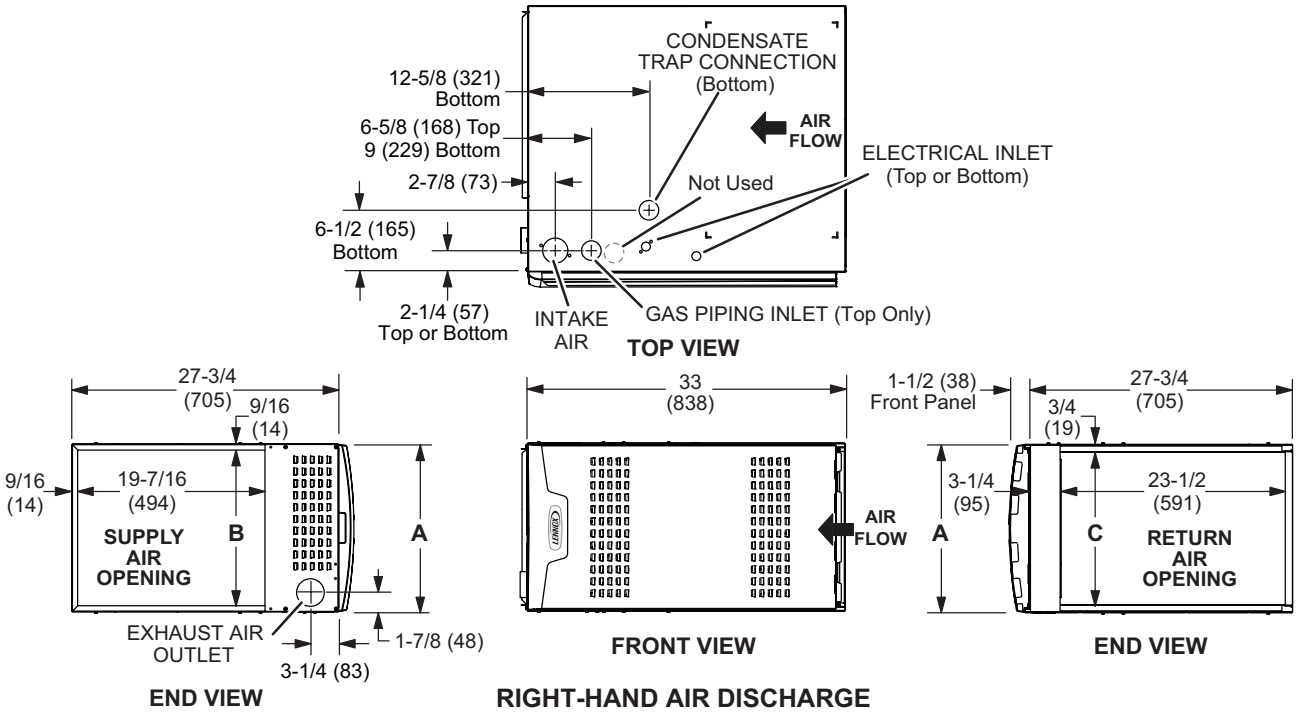

RIGHT-HAND AIR DISCHARGE

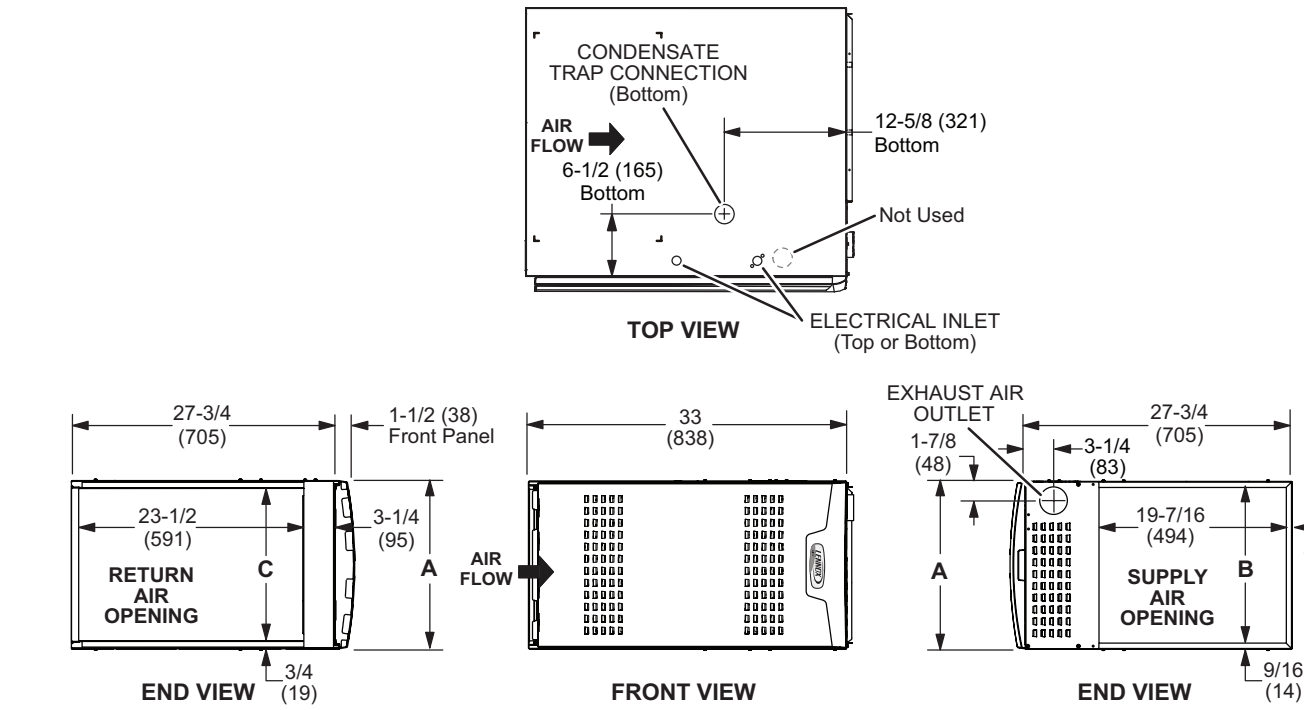

Model No.	A		B		C	
	in.	mm	in.	mm	in.	mm
EL195UH040NE36B EL195UH060NE36B	17-1/2	445	16-3/8	416	16	406
EL195UH080NE48C EL195UH100NE60C	21	533	19-7/8	505	19-1/2	495

HORIZONTAL (END) FILTER KIT

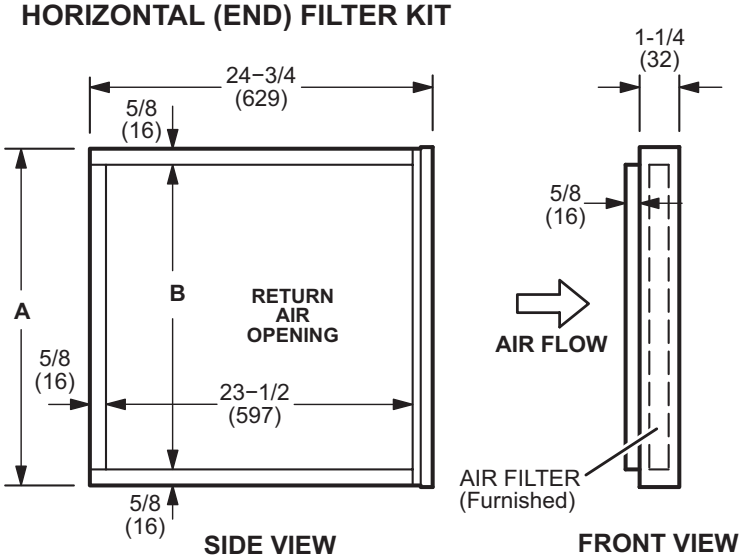

Furnace Cabinet Width	Catalog Number	A		B	
		in.	mm	in.	mm
B	87L96	18	457	16-3/4	425
C	87L97	21	533	18-3/4	476

Optional Return Air Base
(Upflow Applications Only - For use with B and C cabinets)

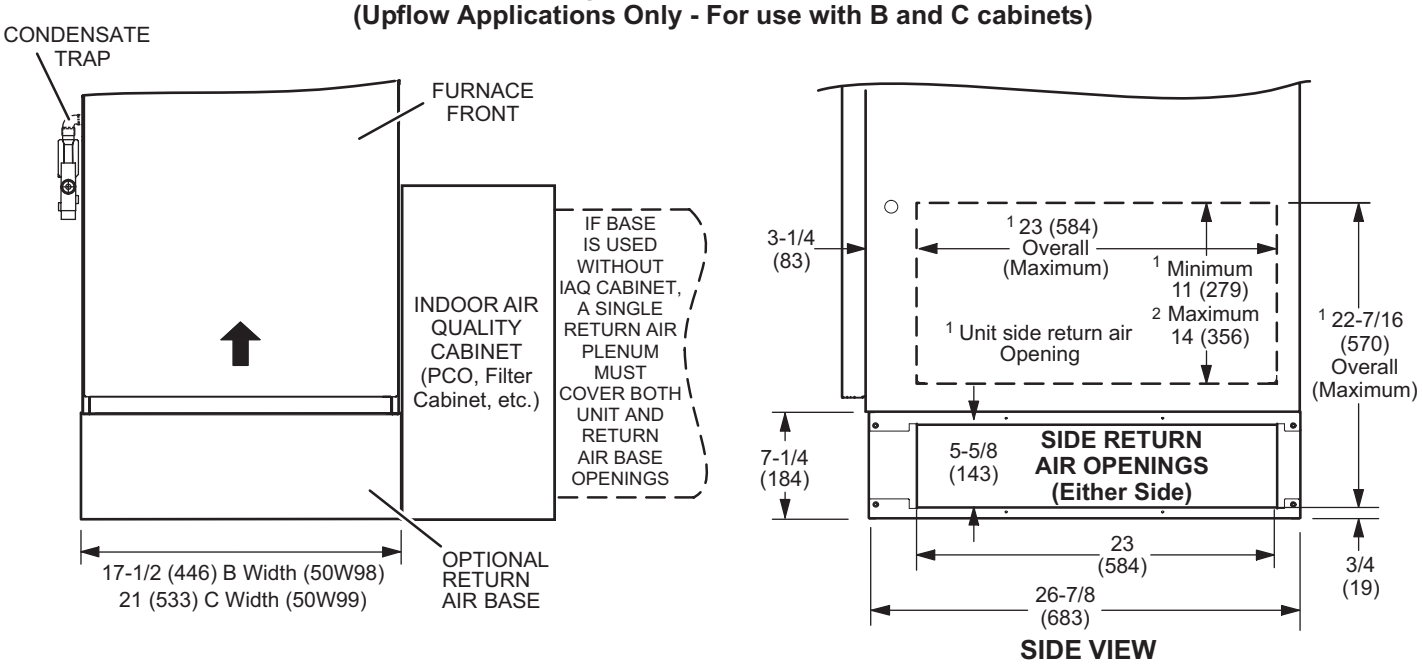

NOTE- Optional Side Return Air Filter Kits are not for use with Optional Return Air Base.

[1] Both the unit return air opening and the base return air opening must be covered by a single plenum or IAQ cabinet. Minimum unit side return air opening dimensions for units requiring 1800 cfm or more of air (W x H): 23 x 11 in. (584 x 279 mm). The opening can be cut as needed to accommodate plenum or IAQ cabinet while maintaining dimensions shown. Side return air openings must be cut in the field. There are cutting guides stenciled on the cabinet for the side return air opening. The size of the opening must not extend beyond the markings on the furnace cabinet.

[2] To minimize pressure drop, the largest opening height possible, up to 14 in. (356 mm), is preferred.

FLUSH-MOUNT VENT TERMINATION KIT 51W11 (US) or 51W12 (CANADA)

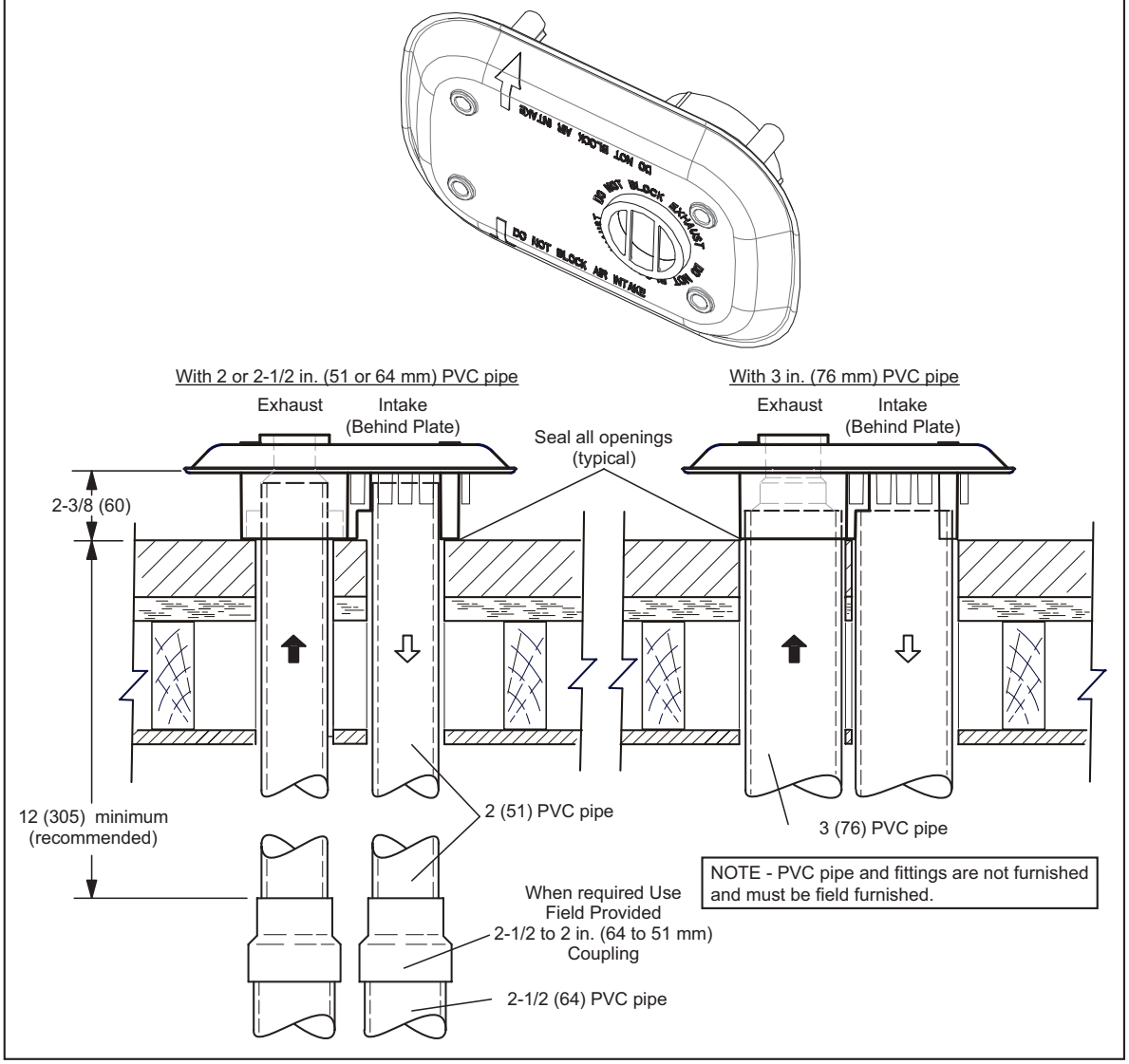

MUFFLERS
15Y66 - 2-inch

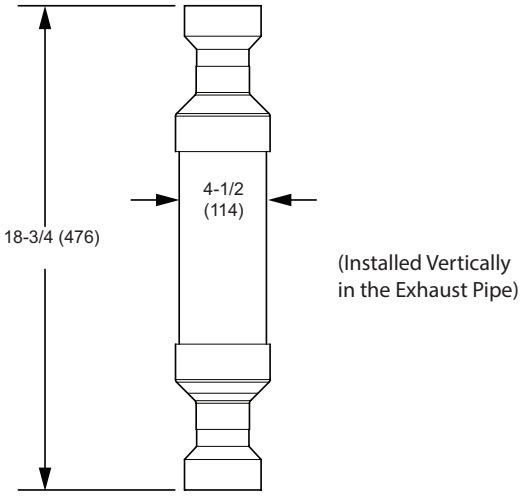

CONCENTRIC WALL TERMINATION APPLICATIONS

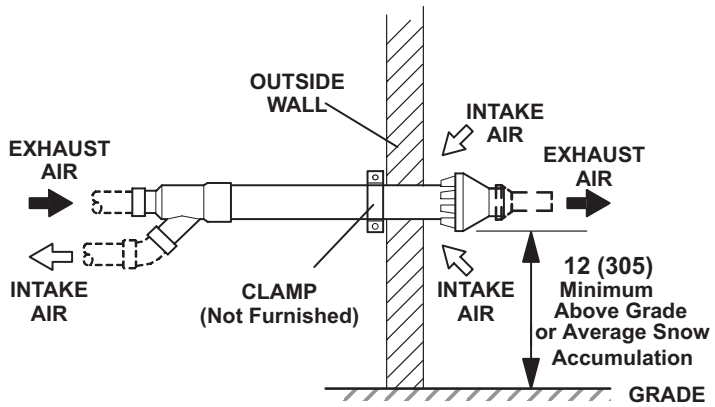

CONCENTRIC ROOF TERMINATION APPLICATIONS

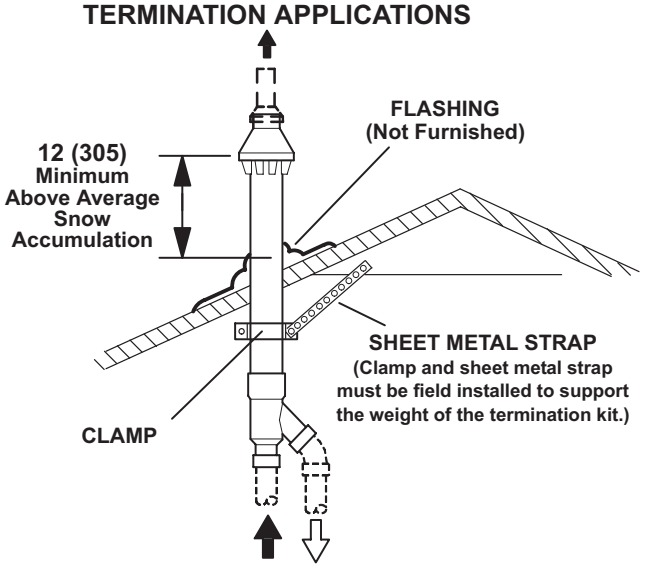

71M80 / 69M29 / 44W92 − 2 inch kits
60L46 / 44W93 − 3 inch kits
See Installation Instructions for additional information.

Note - Field provided reducer may be required to adapt different vent pipe sizes to termination.

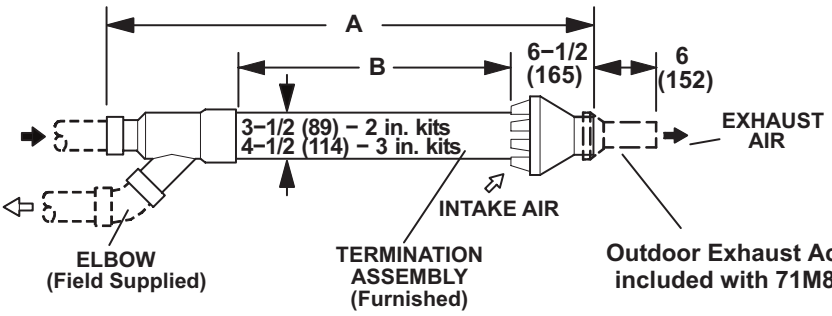

Cat. No.	A		B	
	in.	mm	in.	mm
71M80 69M29	33−3/8	848	16−3/4	425
44W92 (Canada)	29	737	15−1/2	394
60L46	38−7/8	987	21−3/16	538
44W93 (Canada)	36−1/8	918	19−1/2	495

NOTE − Typical illustration for dimensions only. Design may vary depending on kit ordered.

WALL TERMINATION KITS (CLOSE-COUPLE)
EXTENDED VENT FOR GRADE CLEARANCE
2 inch (51 mm) 22G44 (US)
3 inch (76 mm) 44J40 (US)
See Installation Instructions for additional information.

Note - Field provided reducer may be required to adapt different vent pipe sizes to termination.

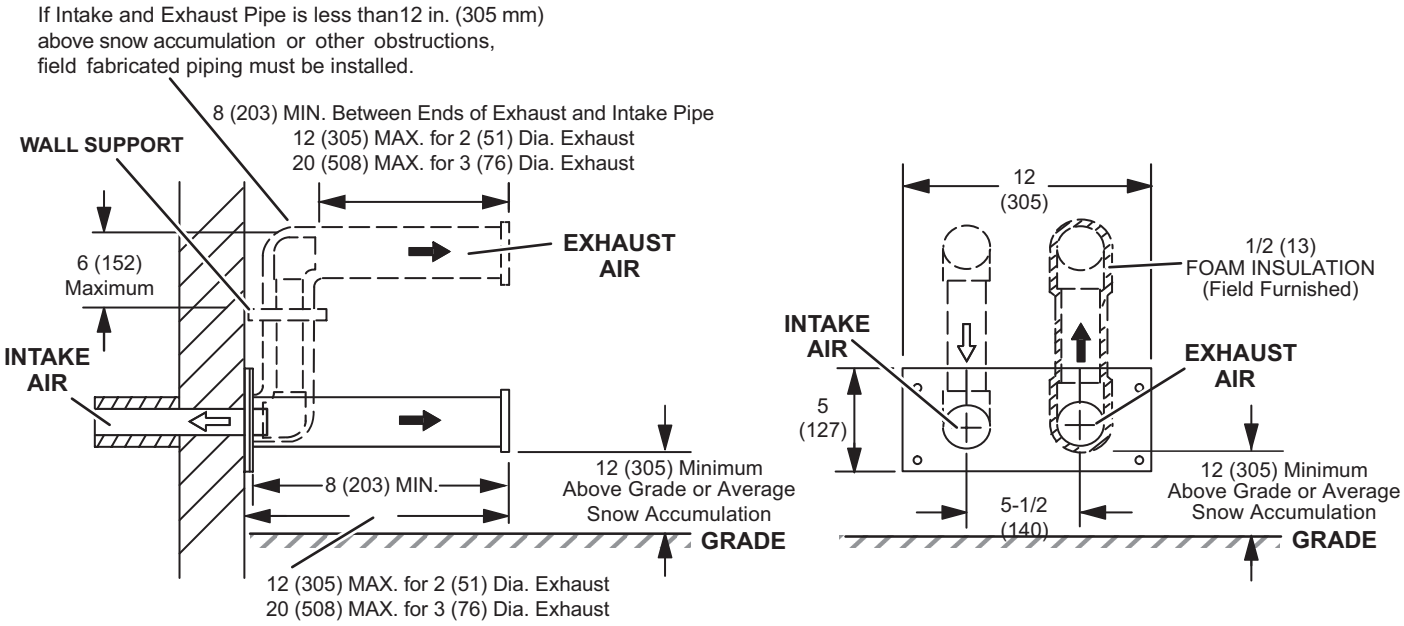

WALL TERMINATION KITS (CLOSE-COUPLE)
EXTENDED VENT FOR GRADE CLEARANCE
2 inch (51 mm) 30G28 (WTK Canada)
3 inch (76 mm) 81J20 (WTK Canada)
See Installation Instructions for additional information.

Note - Field provided reducer may be required to adapt different vent pipe sizes to termination.

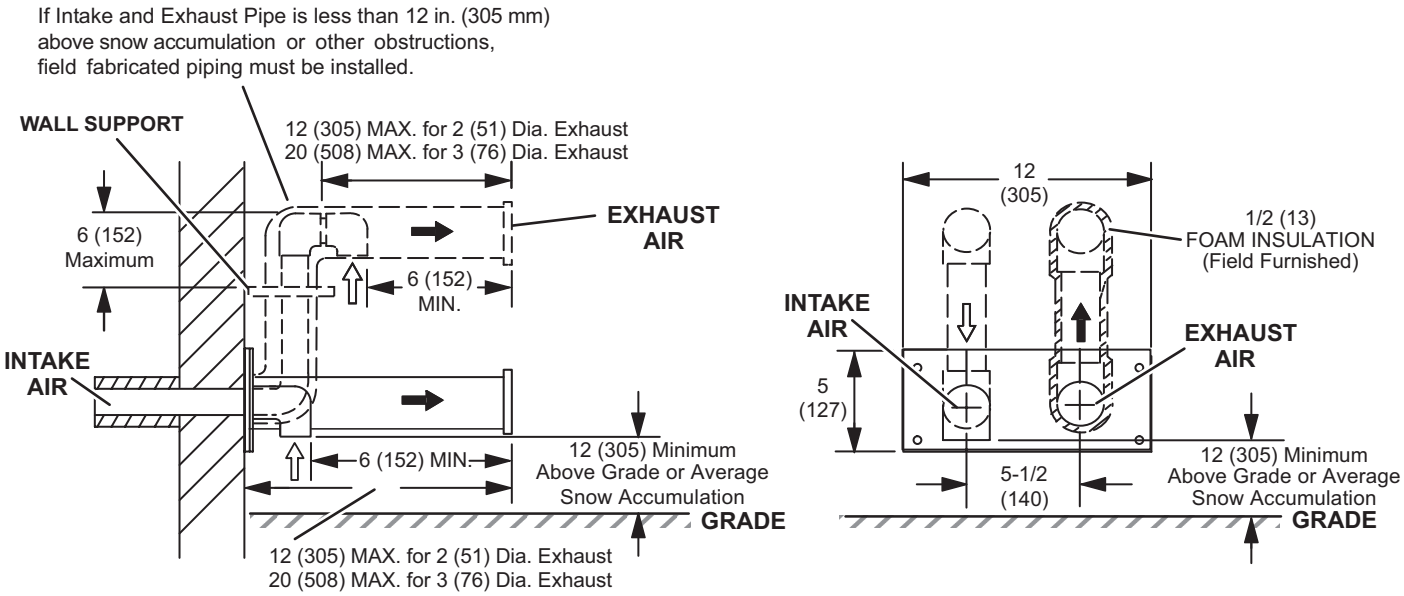

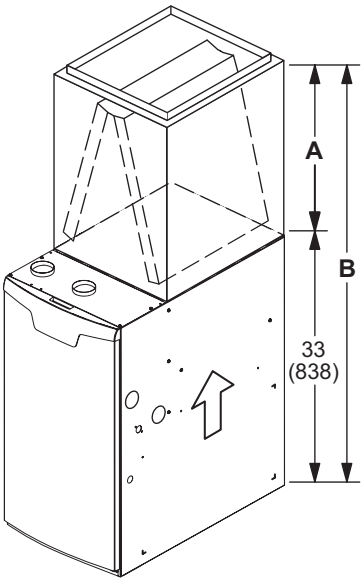

UPFLOW POSITION - CASED

Model		A		B	
CK40CT	**C35/CX35**	**in.**	**mm**	**in.**	**mm**
CK40CT-18/24A CK40CT-18/24B	C35/CX35-18/24A C35/CX35-18/24B	16-1/2	419	49-1/2	1257
CK40CT-24A CK40CT-24B	C35/CX35-24A C35/CX35-24B	18-1/2	470	51-1/2	1308
CK40CT-30A CK40CT-30B	C35/CX35-30A C35/CX35-30B	22-1/2	572	55-1/2	1410
CK40CT-30/36A CK40CT-30/36B CK40CT-30/36C	C35/CX35-30/36A C35/CX35-30/36B C35/CX35-30/36C	24-1/2	622	57-1/2	1461
CK40CT-36A CK40CT-36B	C35/CX35-36A C35/CX35-36B	24-1/2	622	57-1/2	1461
CK40CT-48B CK40CT-48C	C35/CX35-48B C35/CX35-48C	27-1/2	699	60-1/2	1537
CK40CT-49C	C35/CX35-49C	29-1/2	749	62-1/2	1588
CK40CT-50/60C	C35/CX35-50/60C	27-1/2	699	60-1/2	1537
CK40CT-60C	CX35-60C	31-1/2	800	64-1/2	1638

UPFLOW POSITION - UNCASED

Model		A		B	
CK40UT	**C35**	**in.**	**mm**	**in.**	**mm**
CK40UT-18/24A CK40UT-18/24B	C35-18/24A C35-18/24B	14-1/8	359	47-1/8	1197
CK40UT-24A CK40UT-24B	C35-24A C35-24B	16-3/8	416	49-3/8	1254
CK40UT-30A CK40UT-30B	C35-30A C35-30B	20-3/4	527	53-3/4	1365
CK40UT-30/36A CK40UT-30/36B CK40UT-30/36C	C35-30/36A C35-30/36B C35-30/36C	22-1/4	565	55-1/4	1403
CK40UT-36A CK40UT-36B	C35-36A C35-36B	22-3/8	568	55-3/8	1407
CK40UT-48B CK40UT-48C	C35-48B C35-48C	26-1/4	667	59-1/4	1505
CK40UT-49C	C35-49C	28-1/2	724	61-1/2	1562
CK40UT-50/60C	C35-50/60C	25-7/8	657	58-7/8	1495
CK40UT-60C	C35-60C	30-5/8	778	63-5/8	1616

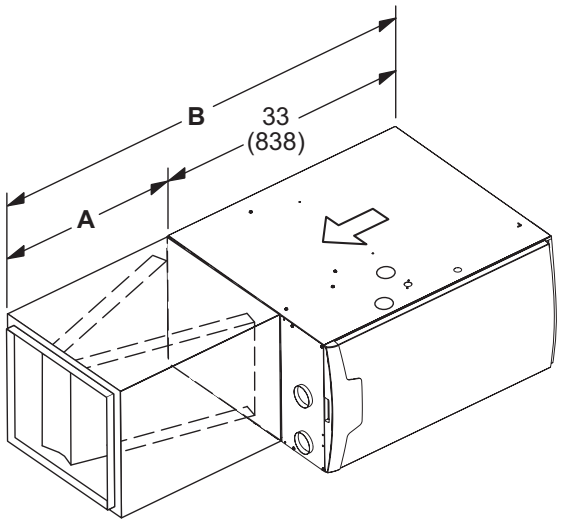

HORIZONTAL POSITION

Model		A		B	
CK40HT	**CHX35**	**in.**	**mm**	**in.**	**mm**
CK40HT-18A CK40HT-24A CK40HT-24B CK40HT-30B CK40HT-36A CK40HT-36B CK40HT-36C CK40HT-42C CK40HT-48C	CHX35-18A CHX35-24A CHX35-24B CHX35-30B CHX35-36A CHX35-36B CHX35-36C CHX35-42C CHX35-48C	26-1/2	673	59-1/2	1511
CK40CT-30A CK40CT-42B CK40CT-48B CK40CT-51/61C	CHX35-30A CHX35-42B CHX35-48B CHX35-51/61C	31-1/2	880	64-1/2	1638

REVISIONS

Sections	Description of Change
Approvals	Updated ENERGY STAR® usage.

Visit us at www.Lennox.com
For the latest technical information, www.LennoxPros.com
Contact us at 1-800-9-LENNOX

NOTE - Due to Lennox' ongoing commitment to quality, Specifications, Ratings and Dimensions subject to change without notice and without incurring liability.
Improper installation, adjustment, alteration, service or maintenance can cause property damage or personal injury.
Installation and service must be performed by a qualified installer and servicing agency.

©2026 Lennox Industries, Inc.