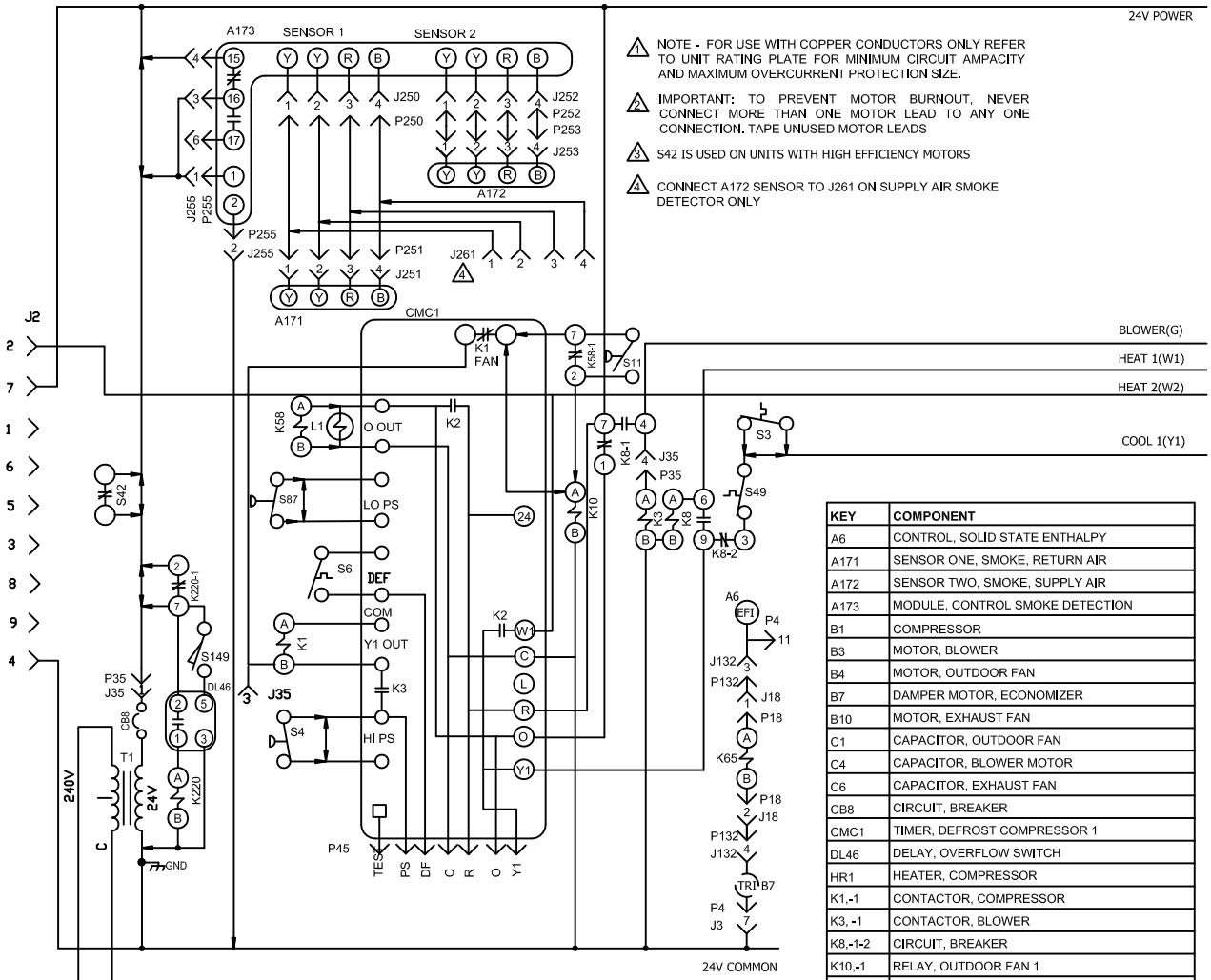

NOTE - FOR USE WITH COPPER CONDUCTORS ONLY REFER TO UNIT RATING PLATE FOR MINIMUM CIRCUIT AMPACITY AND MAXIMUM OVERCURRENT PROTECTION SIZE.

IMPORTANT: TO PREVENT MOTOR BURNOUT, NEVER CONNECT MORE THAN ONE MOTOR LEAD TO ANY ONE CONNECTION. TAPE UNUSED MOTOR LEADS

S42 IS USED ON UNITS WITH HIGH EFFICIENCY MOTORS

CONNECT A172 SENSOR TO J261 ON SUPPLY AIR SMOKE DETECTOR ONLY

KEY	COMPONENT
A6	CONTROL, SOLID STATE ENTHALPY
A171	SENSOR ONE, SMOKE, RETURN AIR
A172	SENSOR TWO, SMOKE, SUPPLY AIR
A173	MODULE, CONTROL SMOKE DETECTION
B1	COMPRESSOR
B3	MOTOR, BLOWER
B4	MOTOR, OUTDOOR FAN
B7	DAMPER MOTOR, ECONOMIZER
B10	MOTOR, EXHAUST FAN
C1	CAPACITOR, OUTDOOR FAN
C4	CAPACITOR, BLOWER MOTOR
C6	CAPACITOR, EXHAUST FAN
CB8	CIRCUIT, BREAKER
CMC1	TIMER, DEFROST COMPRESSOR 1
DL46	DELAY, OVERFLOW SWITCH
HR1	HEATER, COMPRESSOR
K1,-1	CONTACTOR, COMPRESSOR
K3, -1	CONTACTOR, BLOWER
K8,-1-2	CIRCUIT, BREAKER
K10,-1	RELAY, OUTDOOR FAN 1
K58,-1	RELAY, LOW AMBIENT KIT
K65,-1,2	RELAY, EXHAUST FAN
K220,-1	RELAY, OVERFLOW DELAY
L1	VALVE, REVERSING
S3	SWITCH, LIMIT LOW COMPRESSOR 1
S4	SWITCH, LIMIT HI PRESS (MANUAL RESET)
S5	SWITCH, LIMIT HI TEMP COMPRESSOR 1
S6	SWITCH, DEFROST, COMPRESSOR 1
S11	SWITCH, LOW PRESS, LOW AMBIENT KIT
S40	THERMOSTAT, CRANKCASE
S42	SWITCH, OVERLOAD RELAY BLOWER MOTOR
S49	SWITCH, FREEZESTAT
S87	SWITCH, LOW PRESSURE, COMPRESSOR 1
S149	SWITCH, OVERFLOW
T1	TRANSFORMER, CONTROL
T4	TRANSFORMER, BLOWER MOTOR

NOTE - IF ANY WIRE IN THIS APPLIANCE IS REPLACED IT MUST BE REPLACED WITH WIRE OF LIKE SIZE, RATING, TERMINATION AND INSULATION THICKNESS
WARNING - ELECTRIC SHOCK HAZARD, CAN CAUSE INJURY OR DEATH . UNIT MUST BE GROUNDED IN ACCORDANCE WITH NATIONAL AND LOCAL CODES DISCONNECT ALL POWER BEFORE SERVICING.

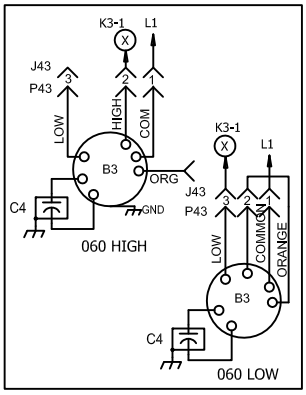

J / P	JACK / PLUG DESCRIPTION
2	HEAT
3	UNIT ECONOMIZER
18	EXHAUST FAN
24	EXHAUST FAN
35	TEST
43	BLOWER MOTOR
45	INPUT
132	BLOWER , EXHAUST FAN MOTOR
250	SMOKE DETECTOR ONE
251	SMOKE DETECTOR ONE
252	SMOKE DETECTOR TWO
253	SMOKE DETECTOR TWO
255	MODULE, CONTROL SMOKE DETECTION
261	SMOKE DETECTOR JUMPER

DENOTES OPTIONAL COMPONENTS
LINE VOLTAGE FIELD INSTALLED

LANDMARK
WIRING DIAGRAM

09/11

COOLING

KHA - 036,048,060, 072 - G,J

SECTION B

REV 0

Supersedes	New Form No.
537299-01	537299-02

© 2011 Lennox Commercial