SUBMITTAL DATA
VPD072S6M-5G
VRF Heat Pump 460V

Job Name: _____ Location: _____

Purchaser: _____ Engineer: _____

Submitted to: _____ Reference: ☐ Approval ☐ Construction ☐

Unit designation: _____ Schedule #: _____

R-32

Compatibility

- R-32 VRF indoor units, R-32 Shut-off valve box.

Construction

- The units shall be galvanized steel with a baked-on powder-coated finish.

Refrigerant System

- The compressors shall be hermetically sealed, inverter-driven, direct flash injected, DC scroll type with soft-start capability manufactured by Samsung.
- The compressor(s) shall feature an asymmetrical scroll design with rotating compressor operation/priority (where applicable). Flash- injected compressors provide advanced low ambient heating performance.
- The system shall have subcooling devices to maintain capacity at extreme system refrigerant pipe lengths and to minimize refrigerant noise.
- The system shall allow a reduction of the main liquid refrigerant pipe (outdoor unit to first unit or Y-joint) by one diameter reducing total system refrigerant volume and pipe and insulation costs if line lengths and vertical separation are within the reduced pipe diameter guidelines. Available for 10 ton and above. Refer to supporting documents for complete guideline details.

Heat Exchanger

- The heat exchanger shall be mechanically bonded fin to copper tube. The aluminum fins of the heat exchanger shall have a protective coating.
- Salt spray test method: ASTM-B117-18 - The heat exchanger showed no unusual rust or corrosion development to 3,000 hours.
- The heat exchanger shall consist of two separate circuits to enhance the heat pump defrost cycle.
- The unit shall use the entire coil initially for the defrost cycle. To resume heating faster in extreme conditions, the upper section shall return to heating operation while the lower section continues to defrost.

Active Artificial Intelligence

- The outdoor unit shall feature Active Artificial Intelligence (AI) and shall monitor environmental and system operational data and use Deep Neural Network algorithms to provide optimal system performance and reliability. The VRF system shall incorporate an on-device AI control module capable of performing localized data processing.
- Active Artificial Intelligence (AI) shall be used to optimize high-pressure control, low-pressure control, defrost cycle activation and operation, and low refrigerant detection.
- The outdoor unit shall use Active Artificial Intelligence (AI) to monitor system refrigerant volume in real-time while in cooling mode to detect possible leaks or low refrigerant charge and provide an error code before system shutdown (conditions apply).

Controls

- The outdoor unit shall have a removable EEPROM that stores the unit serial number, startup information, system settings, system tag/name, and other information.
- Control wiring shall be 16 AWG X 2 shielded wire.

Other Features

- The system shall include an automatic refrigerant leak mitigation function that performs pump-down upon leak detection, activates forced fan and ventilation control, and supports connection to an integrated shut-off valve box. All indoor units shall be equipped with Refrigerant Detection Sensors (RDS) to continuously monitor and respond to potential refrigerant leaks.
- Inverter PCB cooling shall be done with liquid refrigerant and air to maintain optimal and safe operating temperatures.
- The system shall feature advanced oil recovery cycle logic (maximum duration in cool mode: 3 minutes, maximum duration in heat mode: 6 minutes, and defrost cycles lasting over 3 minutes are considered oil recovery cycles). Oil recovery operation shall not interrupt heating or cooling operation.
- The outdoor unit shall feature optional night quiet modes to reduce outdoor unit sound (4 levels) with automatic activation or manual activation (with VSTAT10P-1 accessory).
- The outdoor unit shall feature advanced intelligent defrost logic to significantly reduce defrost cycle frequency by monitoring air resistance across the condenser coil during heating operation to determine defrost operation initiation to prevent unnecessary defrost cycles.
- The outdoor unit shall feature optional snow-blowing logic to prevent snow accumulation on idle outdoor units.
- The outdoor unit shall feature maximum current control settings to limit current (50% - 100% of design current) adjustable at the outdoor unit, supported central controls, and supported indoor unit wired controllers.
- The outdoor unit shall feature energy savings options to reduce system energy consumption when average indoor room temperatures are greater than average indoor set temperatures in heating mode or when average indoor room temperatures are lower than average indoor set temperatures in cooling mode.

PFAS

SPECIFICATIONS VPD072S6M-5G

Outdoor Unit Model Number				VPD072S6M-5G
Mode			-	Heat Pump
Performance	Ton		TON	6
	Rated Capacity*	Cooling	Btu/h	69,000
		Heating	Btu/h	77,000
	EER (Ducted / Non-Ducted)			11.60 / 11.00
	IEER (Ducted / Non-Ducted)			23.30 / 24.18
	High Heat COP (Ducted / Non-Ducted)			3.90 / 3.93
Power	Power Supply		Φ/ #/ V/ Hz	3/ 3/ 460/ 60
	MCA / MOP		A	15 / 20
Dimension	Dimensions (WxHxD)		inch	36-5/8 x 66-3/4 x 30-1/8
	Weight		lbs.	399
Sound	Pressure	Cooling / Heating	dB(A)	54 / 58
Operating Temperature	Cooling**		^{0}F	5 ~ 126
	Heating		^{0}F	-22 ~ 75
Pipe	Liquid , Gas Connection		Φ, inch	3/8 , 3/4
	Max Length - ODU to Farthest IDU		ft	656 [722]
	Max Piping length (1st Branch-IDU)		ft	295
	Max. Total Refrigerant Pipe Length		ft	3,281
	Max Vertical Separation	ODU to IDU***	ft	361
		Highest/Lowest IDU	ft	164
Refrigerant	R-32 Factory Charge		lbs.	11.0
Compressor	Type		-	Flash Injected, Inverter Scroll x 1
	Rated Load Amps (RLA)		A	10.0
Fan	Type		-	BLDC Motor with Propeller
	FLA / Motor Output / Airflow		A/ W/ CFM	2.3 / 630 x 1 / 5580
Safety	Certifications			ETL & ETLc
	Devices	High pressure sensor, low pressure sensor, over-voltage protection, compressor over- current protection, current transformer, fan motor voltage protection, fan motor thermal protection, overheat protection, phase detection protection, high voltage fuses		

*Certified in accordance with the AHRI Variable Refrigerant Flow Multi-Split Air-Conditioners and Heat Pump (VRF) Certification Program which is based on the latest edition of AHRI Standard 1230.

**Cooling operation range is 23-122°F (-5 - 50°C) as standard. When in Main Heating, cooling operation down to 5°F (-15°C) outdoor temperature is possible with modified pipe design for indoor units that require cooling. Cooling or Main cooling is possible down to -13°F (-25°C) when using a low ambient cooling kit. Consult technical documents or Lennox HVAC for details.

***When the outdoor unit is lower than indoor units, and vertical separation is greater than 131 feet, additional conditions apply. When the outdoor unit is higher than the indoor units, and vertical separation is greater than 163 feet, additional conditions apply. Please refer to supporting documents at www.lennox.com/commercial.

ACCESSORIES VPD072S6M-5G

Qty	Model Number	Description
	V1GARD06-4P	VP/VR Top (Hood) Wind/Hail Guard - SM
	V1GARD04-4P	VP/VR Left Side Wind/Hail Guard
	V1GARD05-4P	VP/VR Right Side Wind/Hail Guard
	V1GARD02-4P	VP/VR Rear Wind/Hail Guard - SM & LG
	V1LACB04-4P	VP/VR072-240 Left LA Cooling Baffle (1 required)
	V1LACB05-4P	VP/VR072-240 Right LA Cooling Baffle (1 required)
	V1LACB02-4P	VP/R072S VP/VR192-240 Rear LA Clg Bfl SM (1 required)
	V1LACH01-4P	VP/VR072S LA Cooling Hood - SM (1 required)
	V1BPNH03	V1BPNH03 Base Pan Heater SM/LG (1 required)
	V1BPNC02	VRF Base Heater Control Box 460V (1 required)
	VSTAT10P-1	External contact control interface module for operation and error output and night silent mode manual activation (1 required)

DIMENSIONAL DRAWING VPD072S6M-5G

Unit: Inches

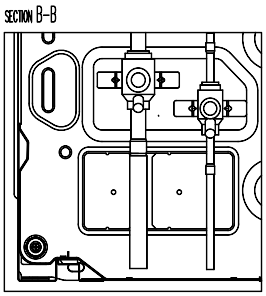

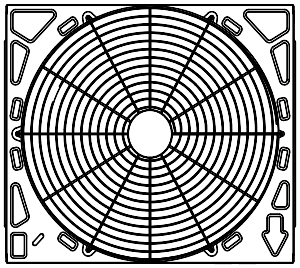

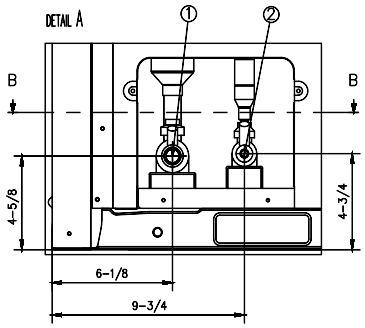

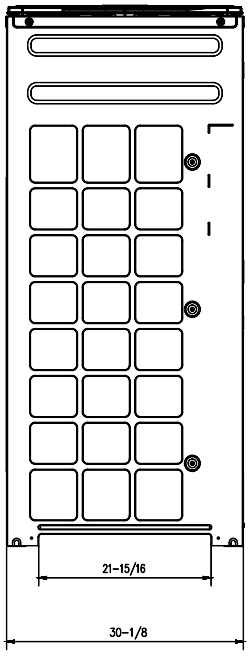

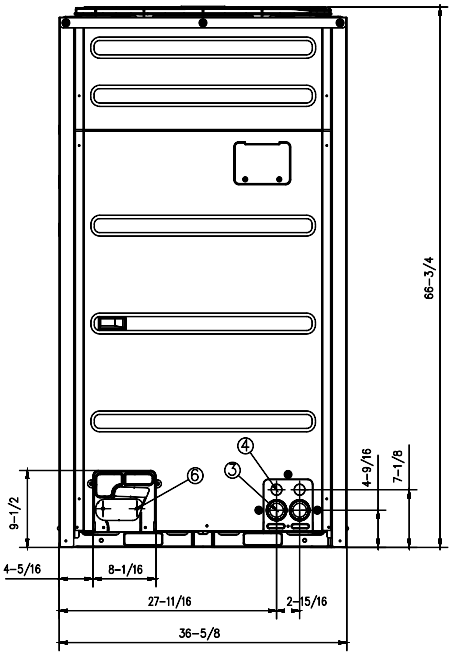

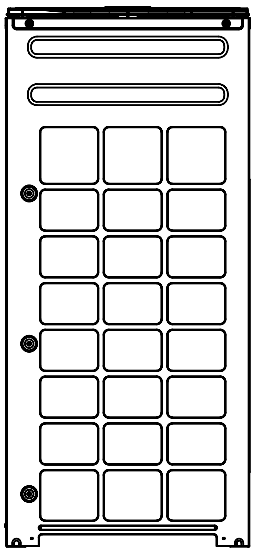

NOTE

1. Detail A and SECTION B-B indicate the dimension after fixing the attached piping.
2. Item 3-6: Knockout hole
3. View C indicate the dimension of knockout hole (bottom)
4. Pipe [Ø, inch]: Brazing connection

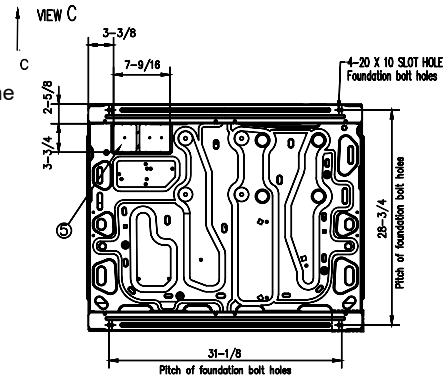

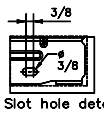

Slot hole detail

kBtu	Liquid Pipe	Gas Pipe
072	3/8	3/4

No.	Description	Remark	No.	Description	Remark
1	Gas refrigerant pipe	3/4	5	Knockout hole for refrigerant piping	Bottom
2	Liquid refrigerant pipe	3/8	6	Knockout hole for refrigerant piping	Front
3	Power conduit knockout	Ø44			
4	Communication wire knockout	Ø34			